SECTION A-A

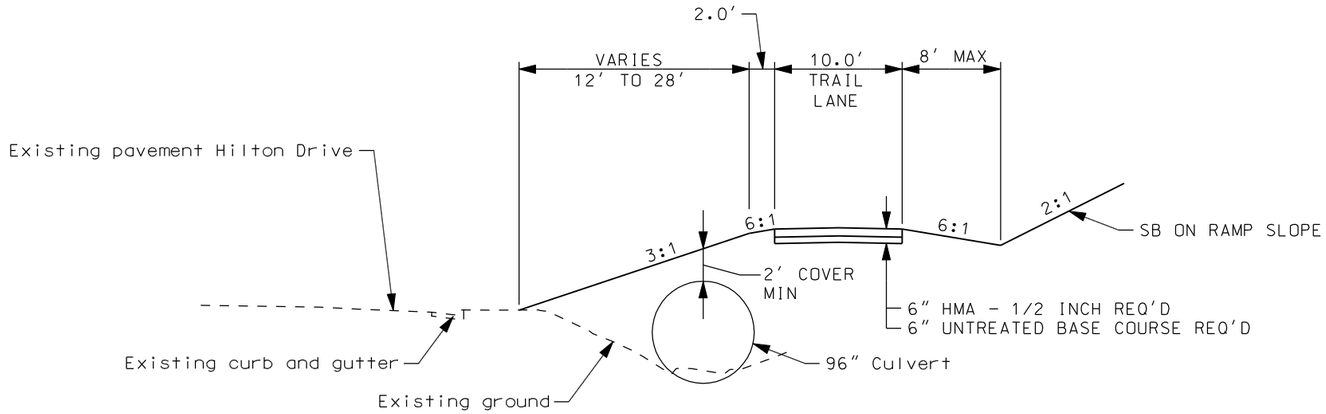
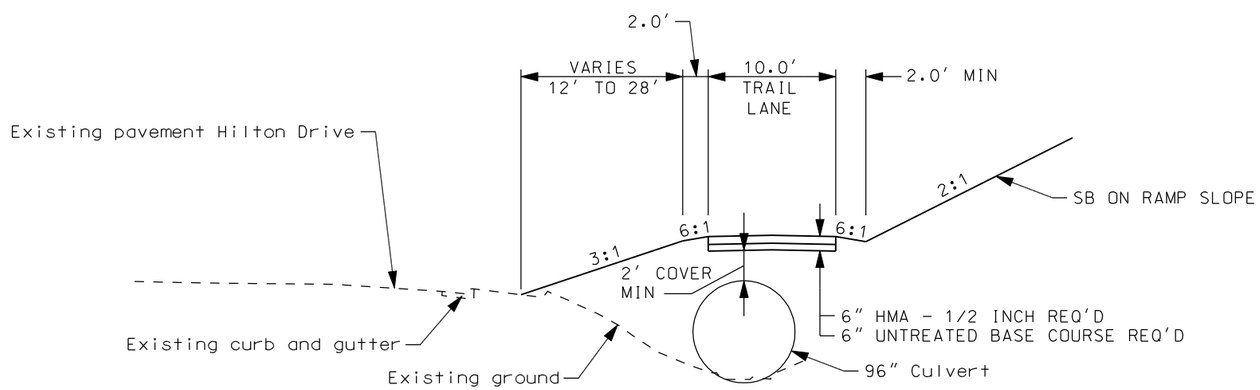
SECTION B-B