Colorado River Bridge – Final

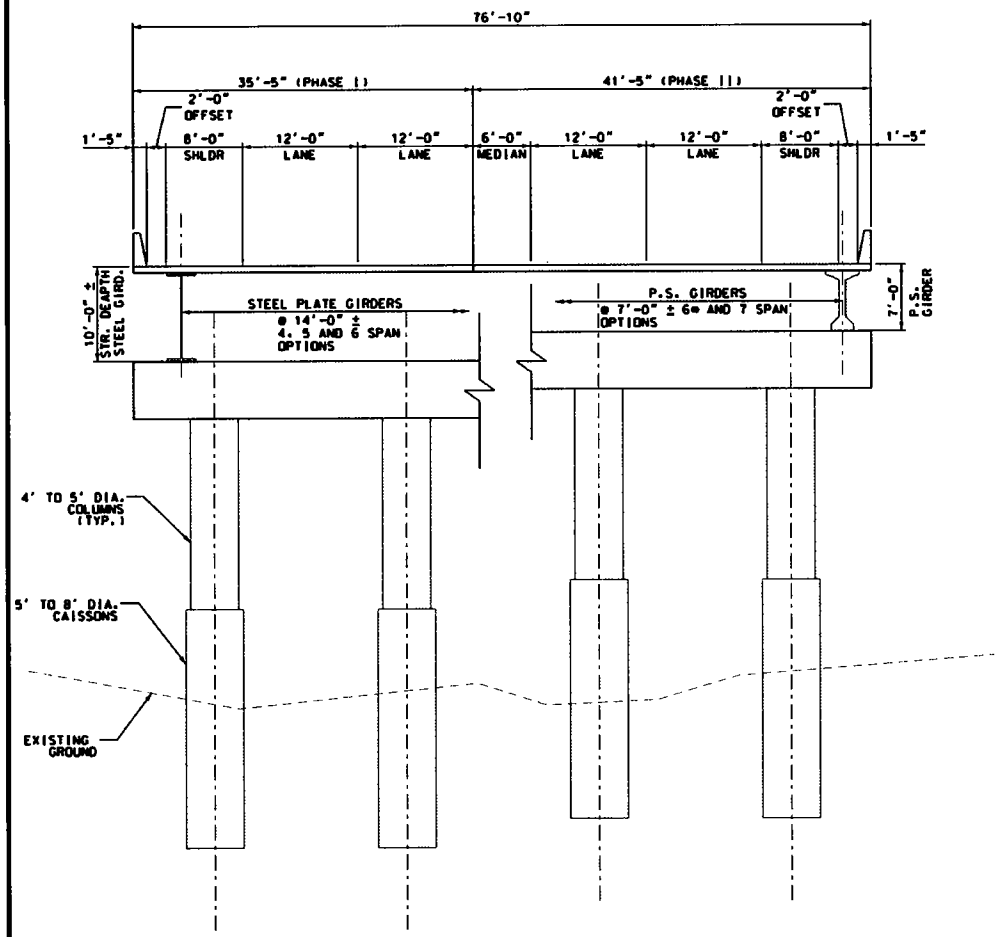

Colorado River Bridge – During Construction

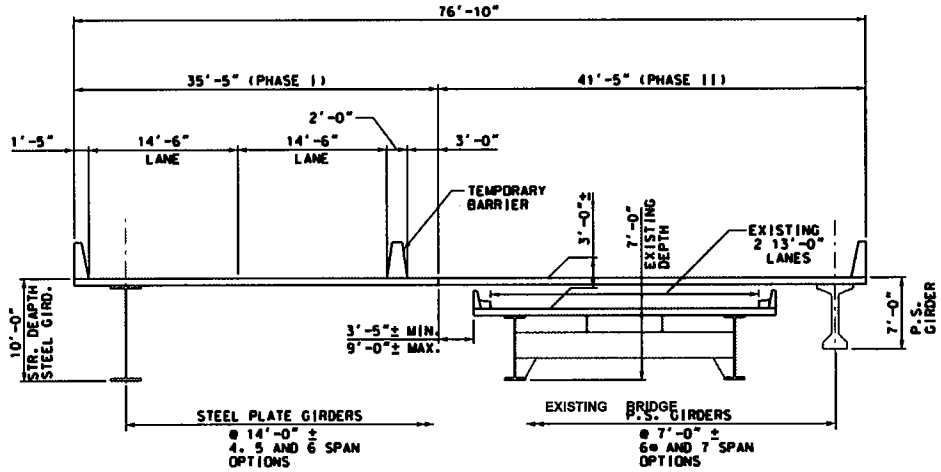

Colorado River Bridge – Optional Box Girder Sections

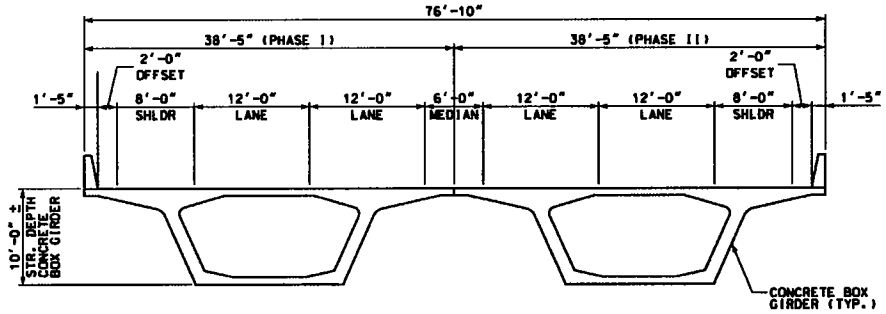

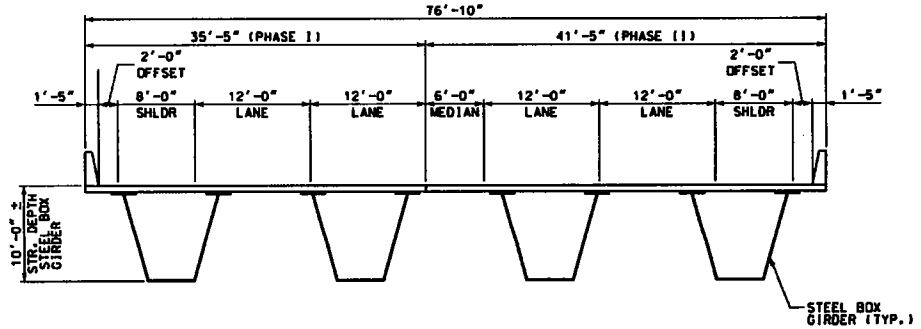

Notes:

* 6 Span P.S. Girder Requires Spliced Girders.

US-191 Colorado River Bridge
Figure 2-5: Colorado River Bridge Preliminary Situation & Layout
Sheet 1 of 5

Colorado River Bridge – 4 Span Plan

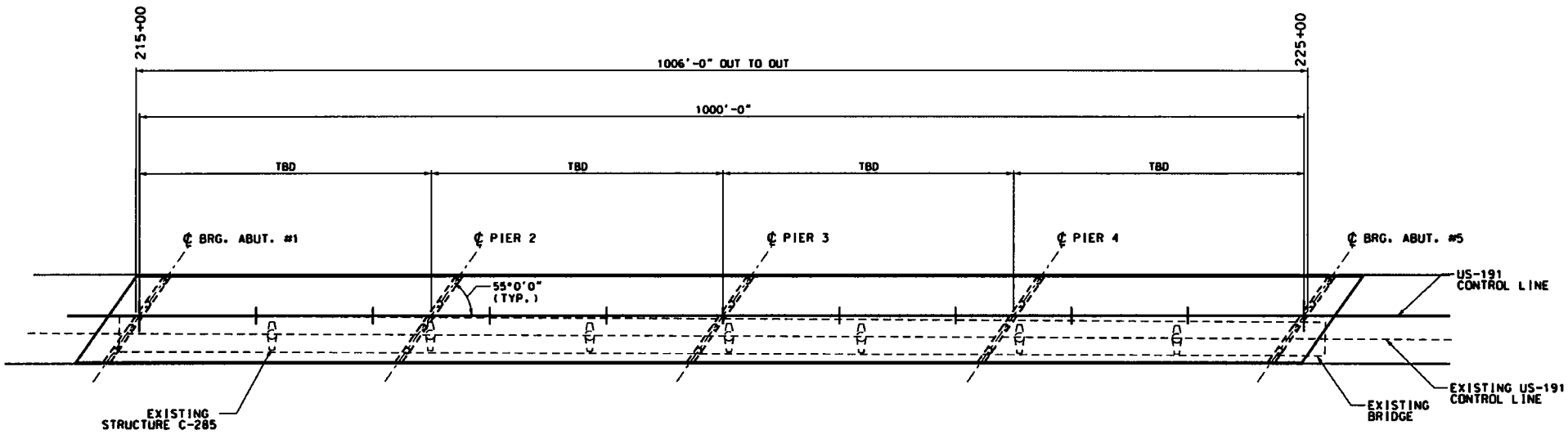

Colorado River Bridge – 4 Span Elevation

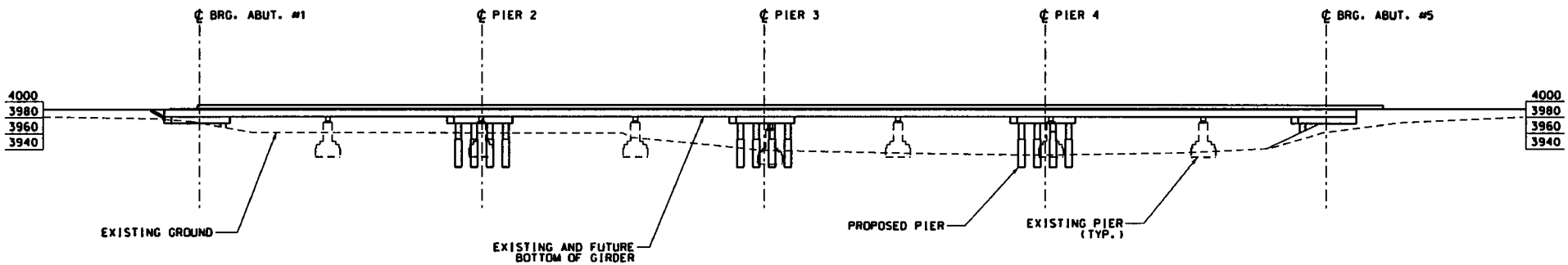

US-191 Colorado River Bridge
Figure 2-5: **Colorado River Bridge** **Preliminary Situation & Layout**
Sheet 2 of 5

Colorado River Bridge – 5 Span Plan

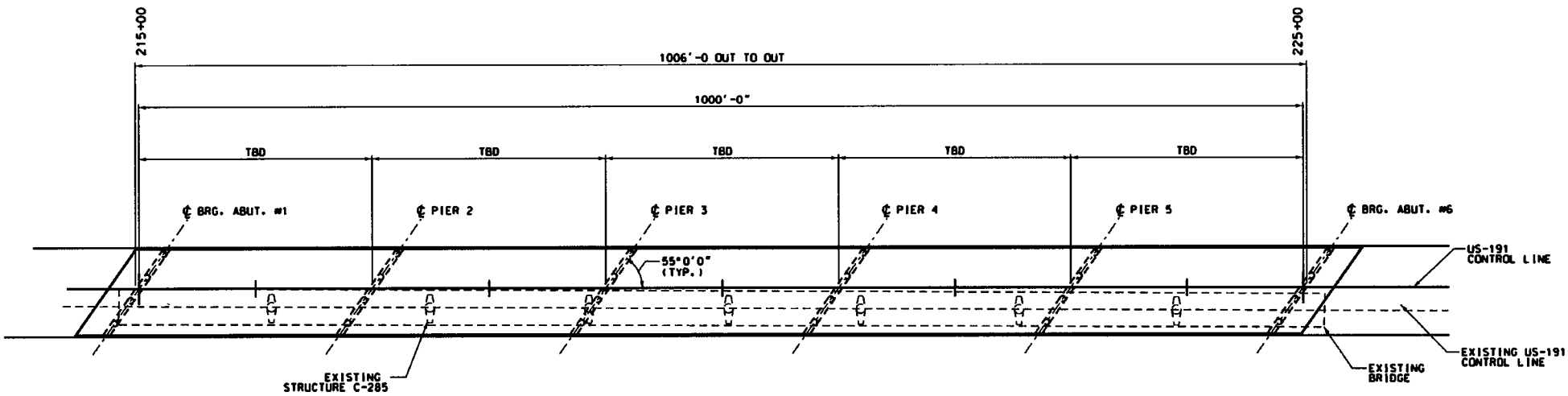

Colorado River Bridge – 5 Span Elevation

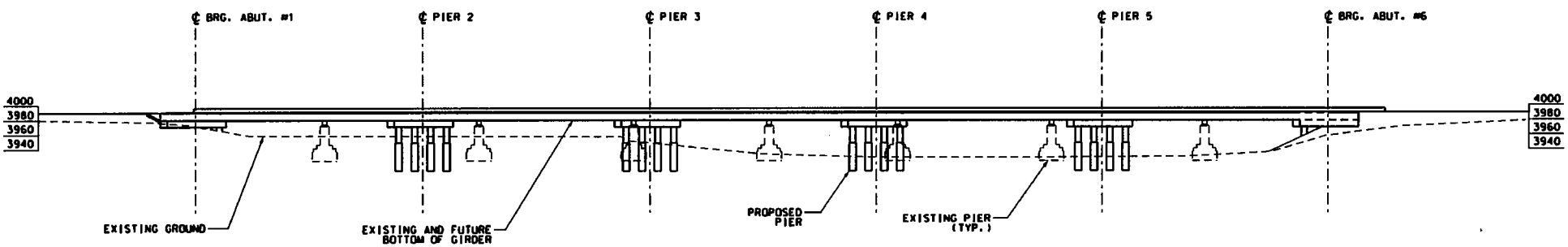

US-191 Colorado River Bridge
Figure 2-5: **Colorado River Bridge** **Preliminary Situation & Layout**
Sheet 3 of 5

Colorado River Bridge – 6 Span Plan

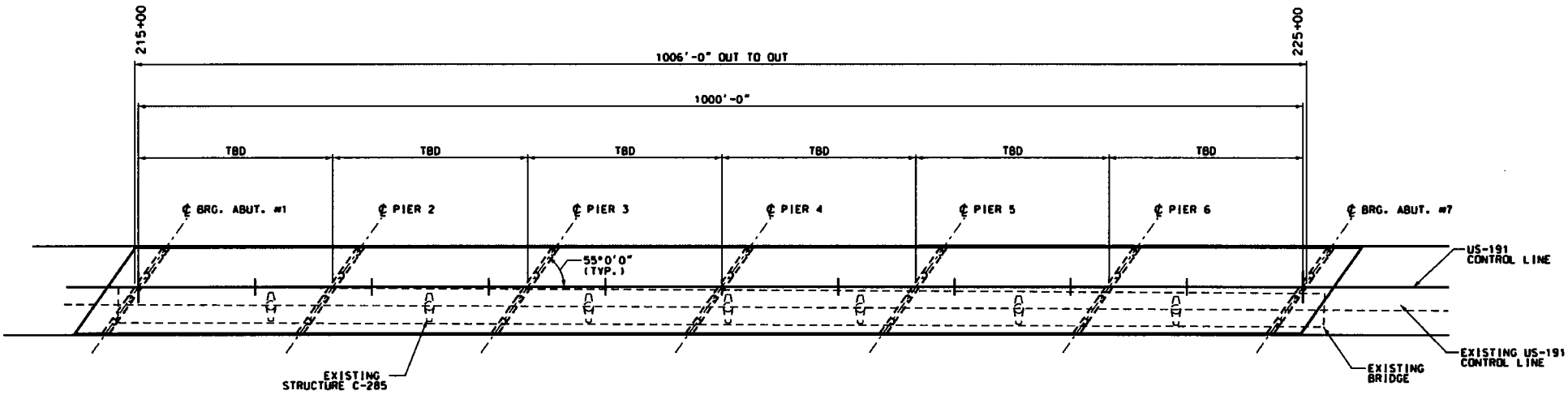

Colorado River Bridge – 6 Span Elevation

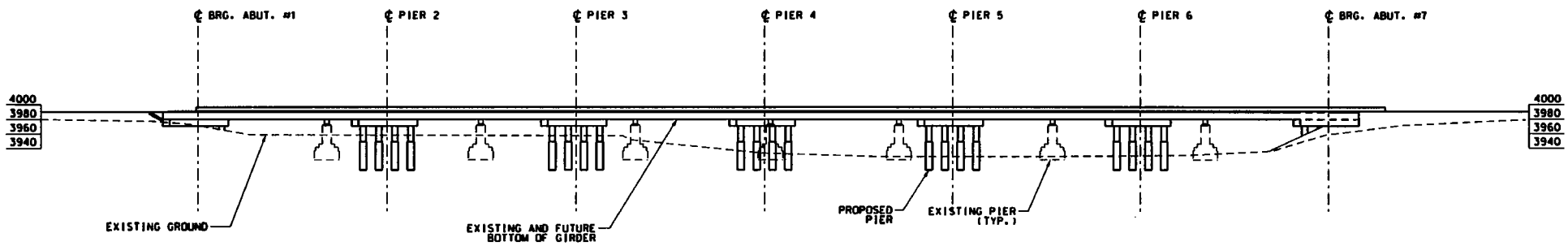

US-191 Colorado River Bridge
Figure 2-5: Colorado River Bridge Preliminary Situation & Layout
Sheet 4 of 5

Colorado River Bridge – 7 Span Plan

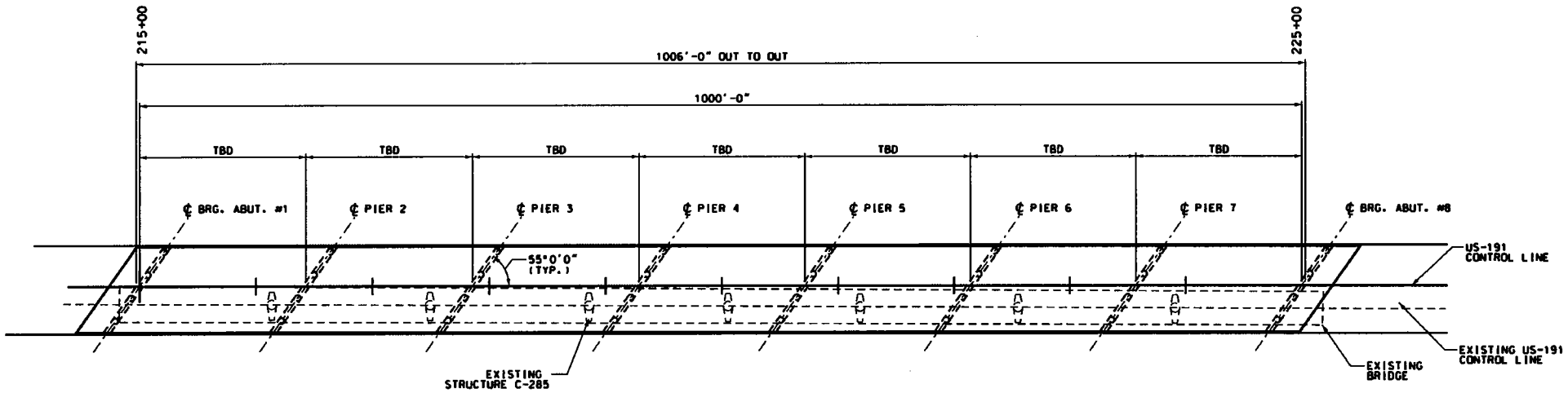

Colorado River Bridge – 7 Span Elevation

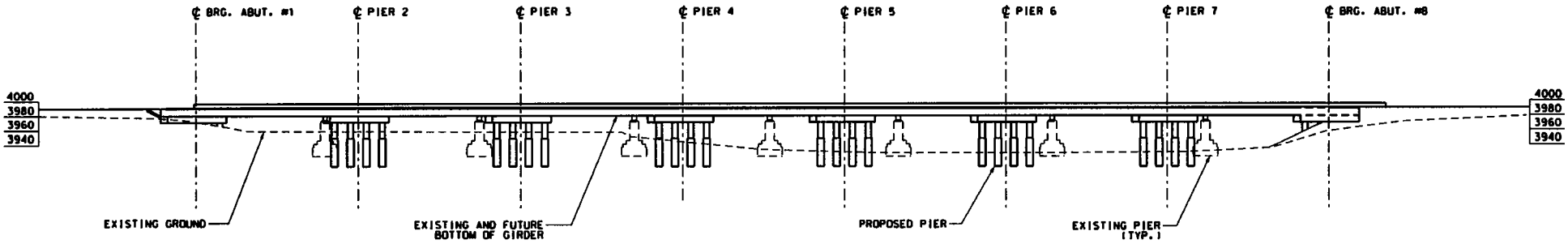

US-191 Colorado River Bridge
Figure 2-5: Colorado River Bridge Preliminary Situation & Layout
Sheet 5 of 5