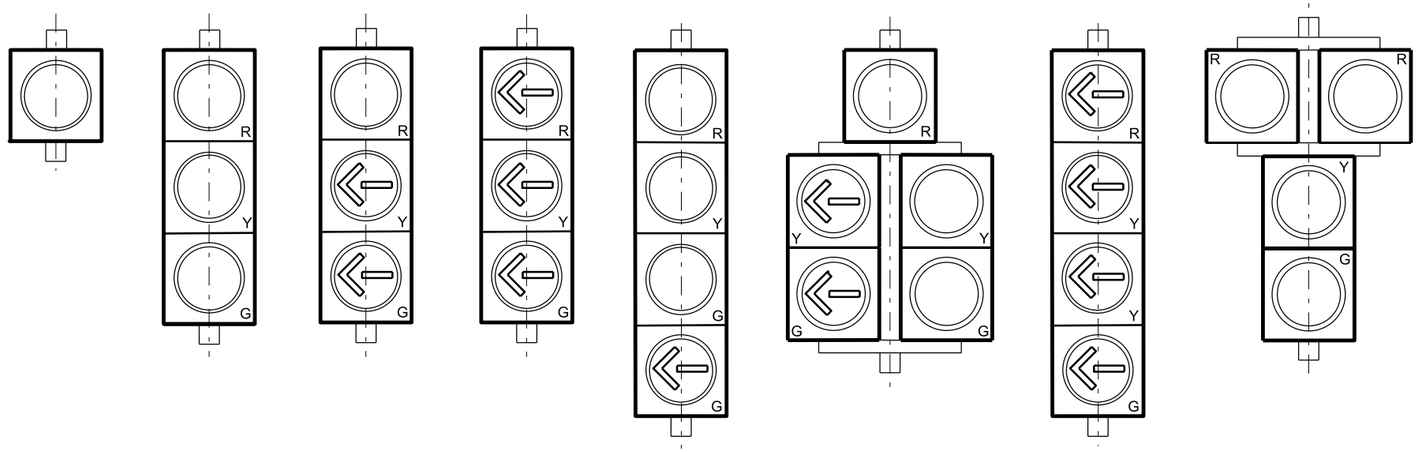

TYPE 0 | TYPE I | TYPE II | TYPE III | TYPE IV | TYPE V | TYPE VI | TYPE VII

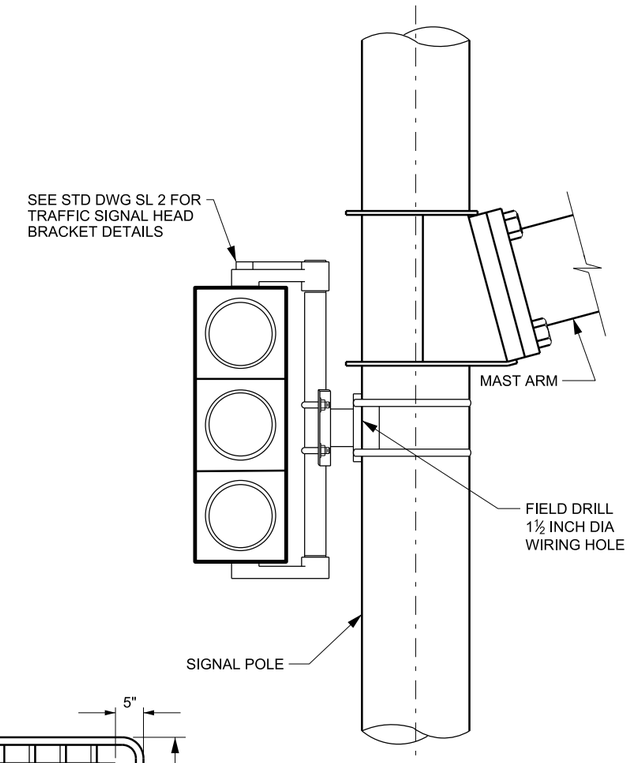

SIGNAL POLE MOUNT

NEAR SIDE SIGNAL HEAD

LOUVERED BACKPLATE DETAILS

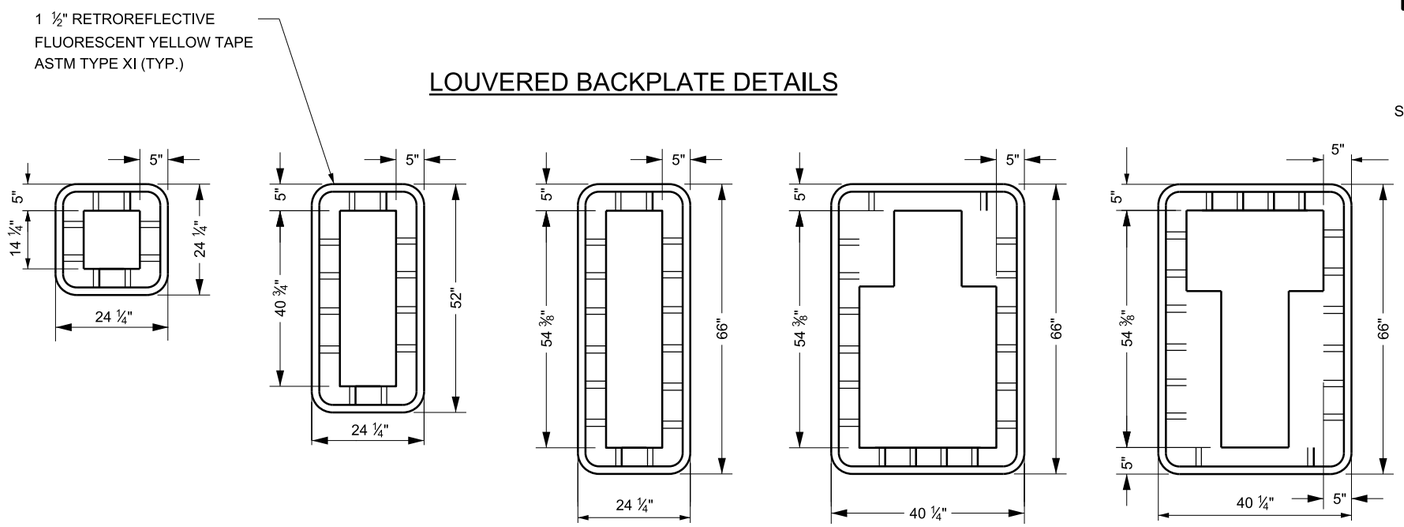

BACKPLATE FOR TYPE 0 SIGNAL HEAD

BACKPLATE FOR TYPE I, II, & III SIGNAL HEAD

BACKPLATE FOR TYPE IV, & VI SIGNAL HEAD

BACKPLATE FOR TYPE V SIGNAL HEAD

BACKPLATE FOR TYPE VII SIGNAL HEAD

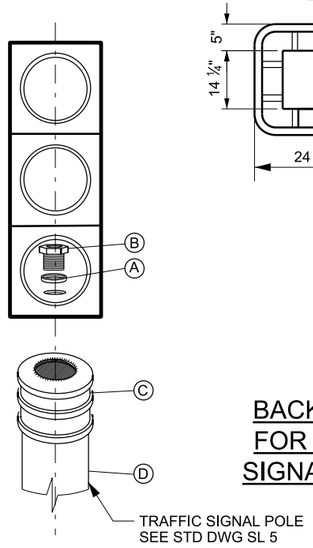

SIGNAL POLE TOP MOUNT

Ⓐ 1 ½" NEOPRENE WASHER
Ⓑ 1 ½" LOCK NIPPLE
Ⓒ 4 ½" INSIDE DIA POLE TOP MOUNTED TERMINAL COLLAR
Ⓓ TRAFFIC SIGNAL POLE, SEE STD DWG SL 5.

NOTES:

1. USE 12 x 12 INCH CAP TYPE VISORS FOR TRAFFIC SIGNALS.
2. PROVIDE BRONZE FITTINGS AND GALVANIZED STEEL PIPE FITTINGS FOR POLE TOP MOUNT.
3. LOCATE TERMINAL BLOCK IN TOP SECTION FOR TYPE I, II, III, IV, AND VI SIGNAL HEADS. REFER TO STD DWG SL 2 FOR WIRE PATH AND TERMINAL BLOCK LOCATIONS FOR TYPE V SIGNAL HEAD.
4. INSTALL TYPE V SIGNAL ASSEMBLIES SO THAT HINGED SIGNAL FACES SWING OPEN TO THE OUTSIDE.
5. ORIENT ALL LED LENSES FOR TOP UPWARD ALIGNMENT UNLESS OTHERWISE SPECIFIED ON PLAN SHEETS.
6. PROVIDE BACKPLATE FOR ALL TYPE 0, I, II, III, IV, AND VI SIGNAL HEADS. PROVIDE BACKPLATE FOR TYPE V AND TYPE VII SIGNAL HEADS ONLY AS SPECIFIED.

SUPPLEMENTAL DRAWING

REVISIONS

NO.	DATE	APPR.	REMARKS
1	10/31/13	LJM	ADD TYPE 0 & TYPE VII SIGNAL HEAD. ADD TYPE 0 & TYPE VII BACKPLATE.

UTAH DEPARTMENT OF TRANSPORTATION
STANDARD DRAWINGS FOR ROAD AND BRIDGE CONSTRUCTION
SALT LAKE CITY, UTAH

RECOMMENDED FOR APPROVAL — OCT.31,2013 DATE
CHAIRMAN STANDARDS COMMITTEE APPROVED — OCT.31,2013 DATE
DEPUTY DIRECTOR

STANDARD DRAWING TITLE: SIGNAL HEAD DETAILS

STD. DWG. NO. SL 6

DGN File: L:\Standard.Drawings\Imperial\2012Approved_Supplemental_Issues\Supp7Approved\SL06.dgn
28-NOV-2013