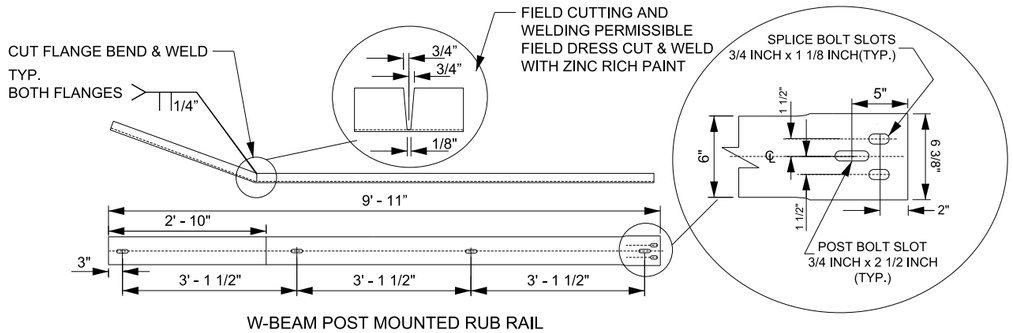

W-BEAM POST MOUNTED RUB RAIL

DETAIL B

SEE NOTE 2

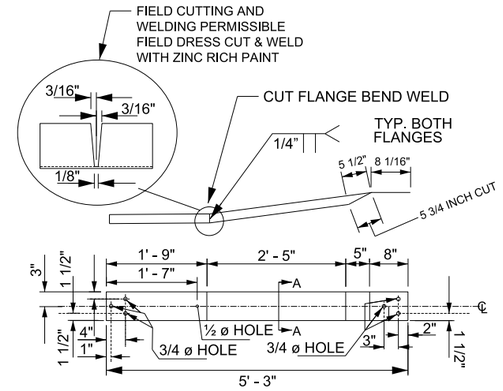

CONCRETE BARRIER MOUNTED RUB RAIL

DETAIL A

SEE NOTE 2

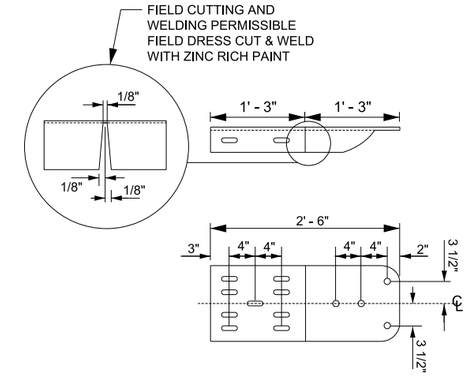

TERMINAL CONNECTION PLATE
(RWE02A MODIFIED)

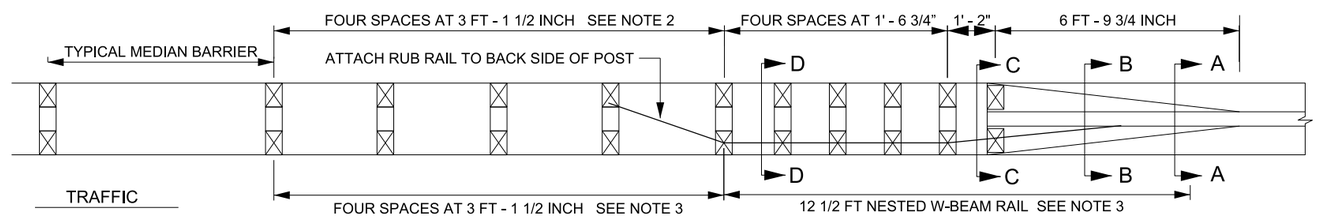

PLAN VIEW

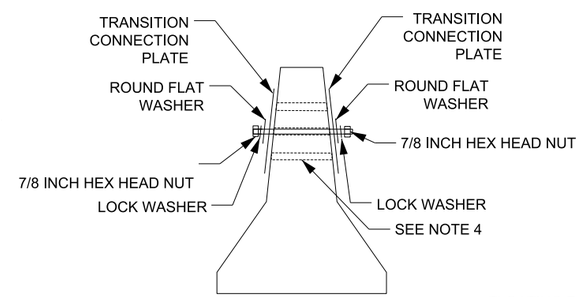

SECTION A-A

SEE NOTES 4 & 9

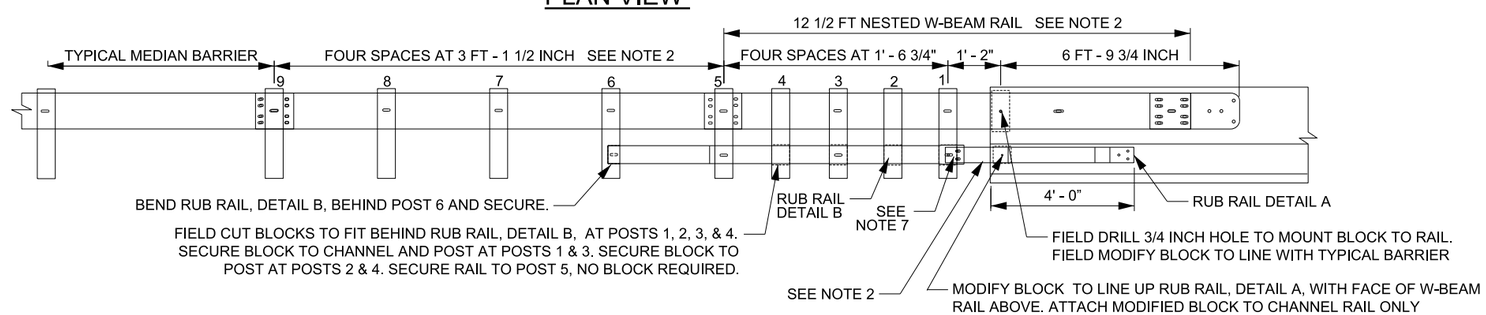

ELEVATION

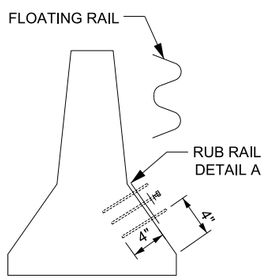

SECTION B-B

SEE NOTES 1, 2, 5, &, 9

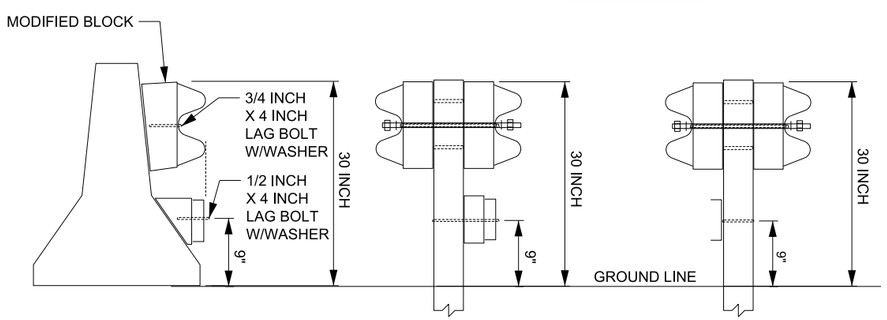

SECTION C-C

SEE NOTES 1 & 2

SECTION D-D

SEE NOTES 6,7, & 9

SECTION E-E

SEE NOTES 7, 8, & 9

NOTES:

1. NEW JERSEY STYLE BARRIER SHOWN. ATTACH TO CONSTANT SLOPE BARRIER IN SIMILAR MANNER. USE CONSTANT SLOPE TRANSITION SECTION, FROM 42 INCHES TO 32 INCHES ACCORDING TO BARRIER TYPE PRIOR TO ATTACHING TRANSITION SECTION.
2. USE C6X 8.2 CHANNEL RUB RAIL FOR THE MANUFACTURING OF DETAIL A AND DETAIL B. TWIST DETAIL A TO A 35 DEGREE RIGHT HAND TWIST. GALVANIZE TO MEET AASHTO M 111 AFTER PUNCHING, CUTTING AND TWISTING ARE COMPLETE.
3. USE TRANSITION GUARDRAIL PANELS ACCORDING TO STD DWG BA 4B1.
4. CORE DRILL BARRIER WITH 1 INCH HOLES, DO NOT USE ROTARY PERCUSSION DRILL. INSTALL TRANSITION CONNECTION PLATE USING 7/8 INCH HIGH STRENGTH TREADED RODS WITH ROUND WASHERS, LOCK WASHERS, AND NUTS ON BOTH SIDES OF THE BARRIER SO THAT NUTS WILL HAVE FULL ENGAGEMENT OF ROD AND WILL NOT BE GREATER THAN 1/2 INCH ABOVE NUT.
5. DRILL BARRIER WITH 3 HOLES, EACH MEASURING 3/4 INCH X 4 INCH. INSTALL THREE 5/8 INCH X 5 1/2 INCH HIGH STRENGTH TREADED RODS USING AASHTO M 235 EPOXY. INSTALL ROUND WASHERS, LOCK WASHERS, AND NUTS SO THAT NUTS WILL HAVE FULL ENGAGEMENT OF ROD AND WILL NOT BE GREATER THAN 1/2 INCH ABOVE NUT.
6. USE 5/8 INCH TREADED ROD WITH WASHERS AND NUTS TO ATTACH W-BEAM GUARDRAIL TO POSTS. USE CENTER HOLE OF POST FOR ATTACHMENT SO THAT NUTS WILL HAVE FULL ENGAGEMENT OF ROD AND WILL NOT BE GREATER THAN 1/2 INCH ABOVE NUT.
7. USE TYPICAL GUARDRAIL SPLICE BOLTS TO CONNECT RUB RAIL DETAIL A AND RUB RAIL DETAIL B TOGETHER. USE TYPICAL GUARDRAIL BUTTON HEAD BOLTS TO ATTACH RUB RAIL TO BLOCKS AND POSTS.
8. ATTACH RUB RAIL TO BACK OF POST # 6.
9. USE GALVANIZED OR ZINC COATED HARDWARE TO MOUNT TRANSITION CONNECTION PLATE, RUB RAIL, DETAIL A, ONTO CONCRETE BARRIER, W-BEAM CONNECTION RODS, AND LAG BOLTS.

SUPPLEMENTAL DRAWING

REVISIONS

NO.	DATE	APPR.	REMARKS
1	08/30/12	SDD	CORRECTED SECTION A-A NOTE CALL OUT.

UTAH DEPARTMENT OF TRANSPORTATION
STANDARD DRAWINGS FOR ROAD AND BRIDGE CONSTRUCTION
SALT LAKE CITY, UTAH

RECOMMENDED FOR APPROVAL — AUG.30,2012 DATE
CHAIRMAN STANDARDS COMMITTEE APPROVED — AUG.30,2012 DATE
DEPUTY DIRECTOR

W-BEAM GUARDRAIL
MEDIAN BARRIER
TRANSITION
HARDWARE AND LAYOUT

STANDARD DRAWING TITLE

STD. DWG. NO.
BA 4B4

DGN File:L:\Standard_Drawings\Imperial\2012Approved_Supplemental_Issues\SupplApproved\BA0484.dgn
12-SEP-2012