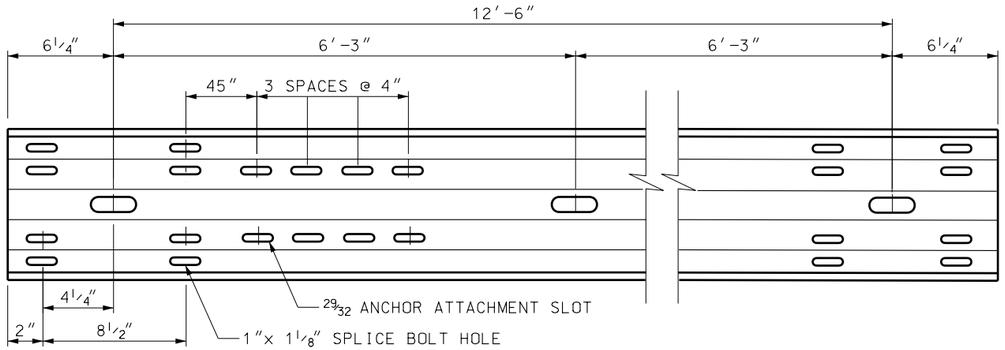

RAIL ELEMENT

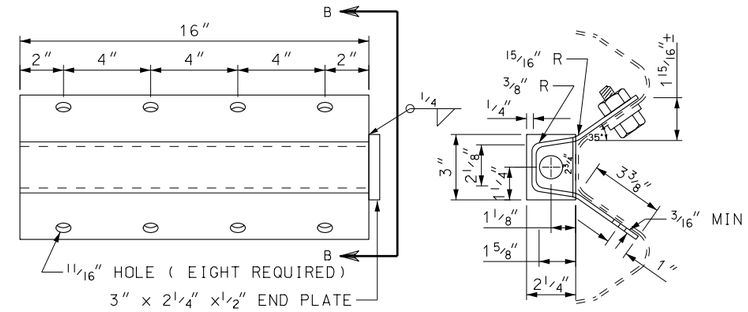

ELEVATION

SECTION B-B

ANCHOR PLATE

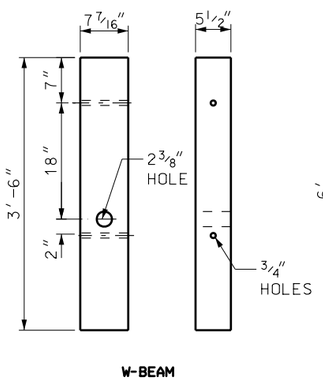

WOOD BREAKAWAY POST

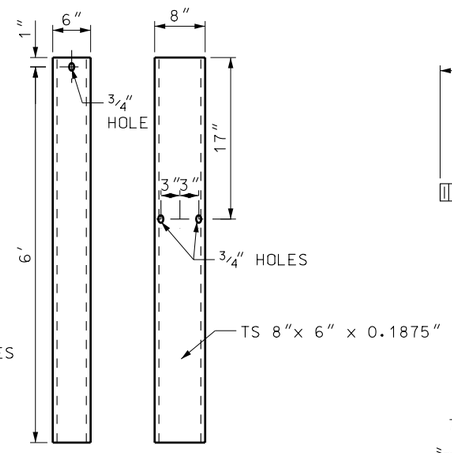

FOUNDATION TUBE

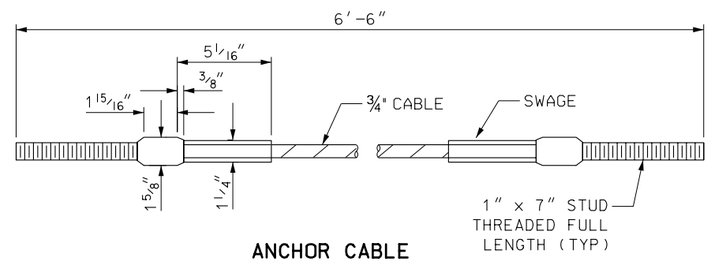

ANCHOR CABLE

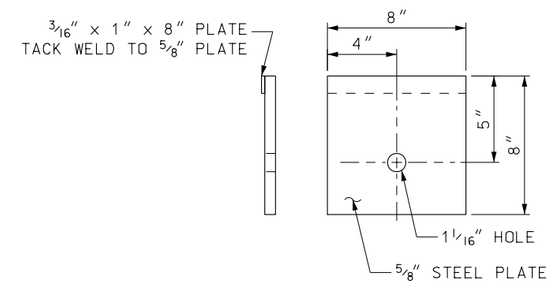

NOTE:
INSTALL BEARING PLATE WITH 5″ PORTION UP. SECURE PLATE TO POST USING TWO NAILS AT TOP OF PLATE.

BEARING PLATE

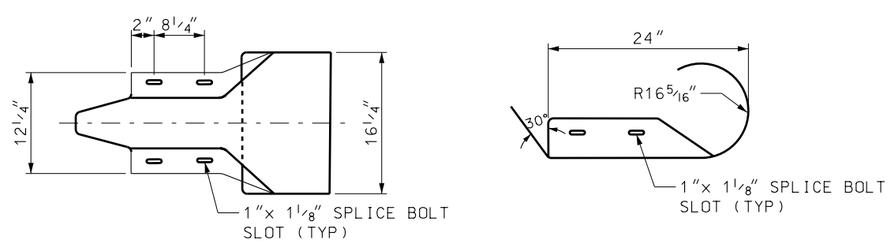

END SECTION (ROUNDED)

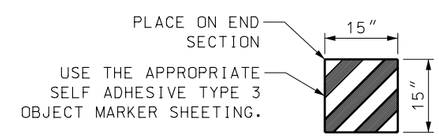

DELINEATION SHEETING

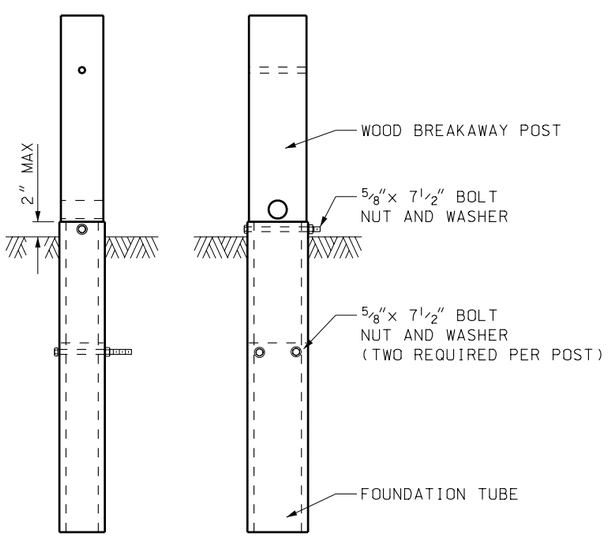

ANCHOR POST ASSEMBLY

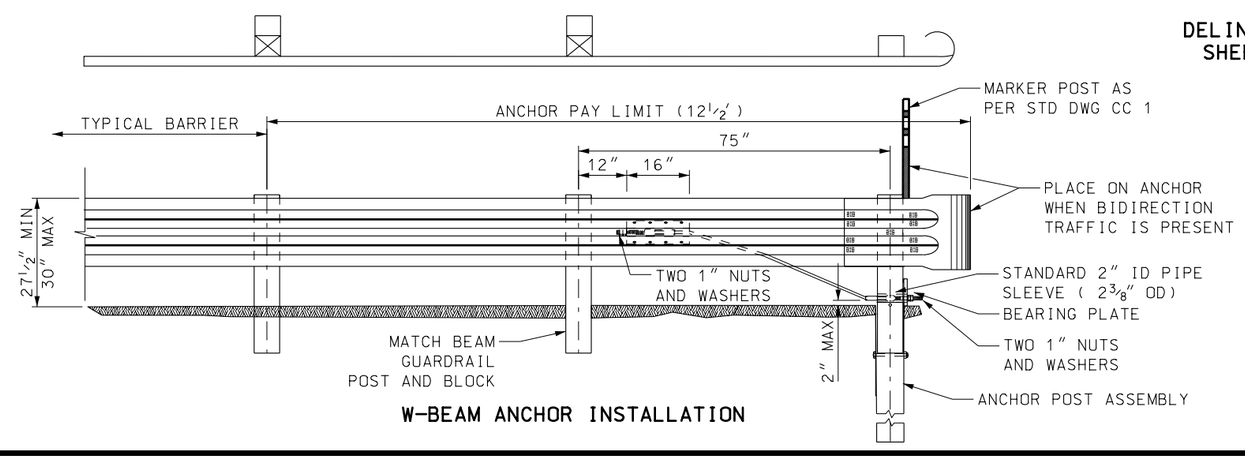

W-BEAM ANCHOR INSTALLATION

REVISIONS

NO.	DATE	APPR.	REMARKS
1	10/27/05	G.S.	REMOVED SOIL PLATE REQUIREMENT. REVISED W-BEAM ANCHOR INSTALLATION DETAIL. REVISED DIMENSIONS ON BREAKAWAY POST AND FOUNDATION TUBE.
2	11/30/06	G.S.	ADDED DELINEATION MARKER AND POST TO W-BEAM ANCHOR INSTALLATION.

UTAH DEPARTMENT OF TRANSPORTATION
STANDARD DRAWINGS FOR ROAD AND BRIDGE CONSTRUCTION
SALT LAKE CITY, UTAH

RECOMMENDED FOR APPROVAL — NOV. 30, 2006 DATE
CHAIRMAN STANDARDS COMMITTEE
APPROVED — NOV. 30, 2006 DATE
DEPUTY DIRECTOR

W-BEAM GUARDRAIL
ANCHOR
TYPE I

STANDARD DRAWING TITLE

STD DWG
BA 4D

DGN File: L:\Standard\Drawings\Imperial\2005\Approved\xChange8\Approved\BA04D.dgn
18-DEC-2006