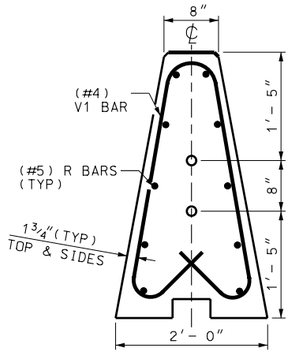

PRECAST BARRIER END SECTION

PIPE LOCATIONS FOR JOINT TYPE X CONNECTION

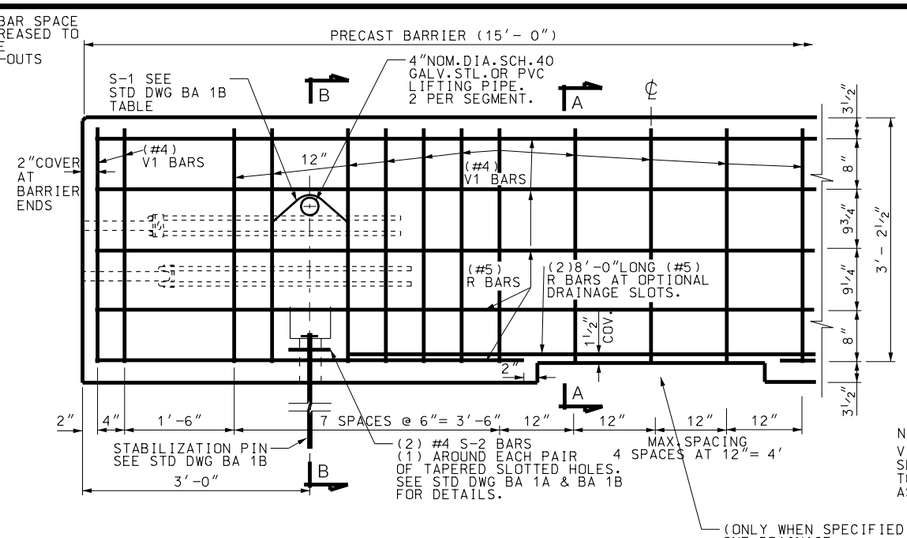

REINFORCEMENT FOR PRECAST CONSTANT SLOPE CONCRETE BARRIER (CSCB) (TYPE 1)

SHOWING REINFORCEMENT FOR JOINT CONNECTION ON (TYPE X)

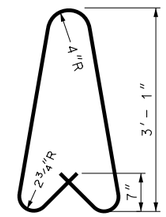

V1 BAR

#4 REBAR

NOTE:
V1 BARS ABOVE THE DRAINAGE SLOT MAY NEED A MODIFICATION TO ACCOMMODATE 1 1/2" CLEAR COVER AS DIRECTED BY THE ENGINEER.

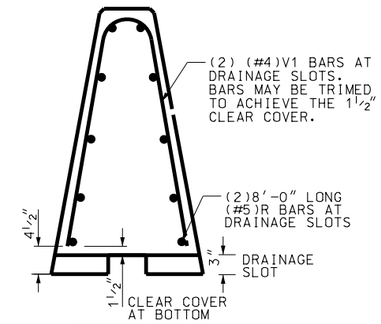

SECTION A-A

STEEL PLACEMENT AT (REQUIRED) DRAINAGE SLOT

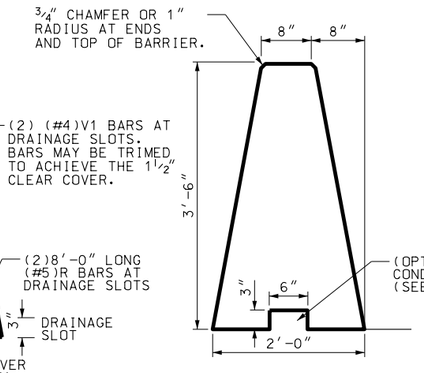

CONSTANT SLOPE CONCRETE TRAFFIC BARRIER

THE TYPE X JOINT CONNECTION MAY BE USED IN CAST IN PLACE BARRIER WHEN ADJACENT TO PRECAST CSCB TO MATCH THE JOINT CONNECTION.

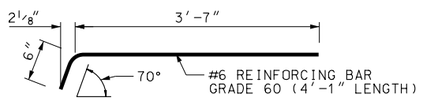

DEFORMED BAR ANCHOR DETAILS

(2) BARS REQUIRED PER ASSEMBLY.
(8) REQUIRED PER JOINT.

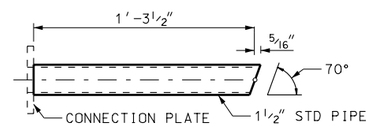

UPPER CONNECTION PIPE DETAILS

(1) STEEL PIPE REQUIRED PER UPPER ASSEMBLY.
(2) REQUIRED PER JOINT.

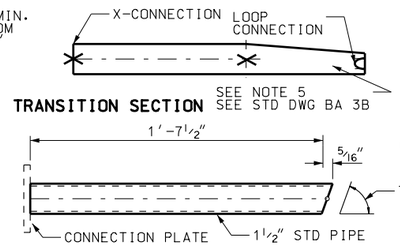

TRANSITION SECTION

LOWER CONNECTION PIPE DETAILS

(1) STEEL PIPE REQUIRED PER LOWER ASSEMBLY.
(2) REQUIRED PER JOINT.

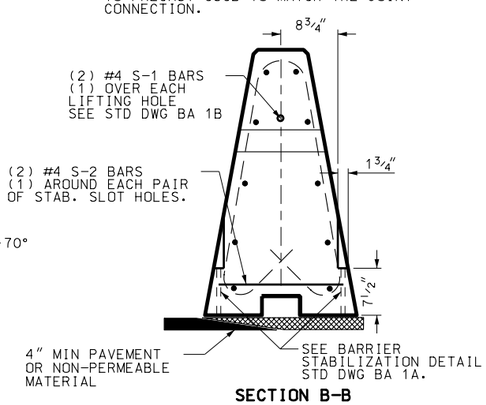

SECTION B-B

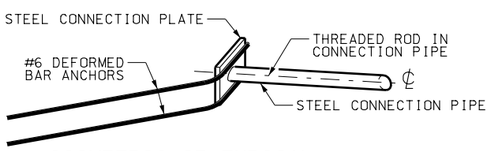

ISOMETRIC OF TYPICAL WELDED ASSEMBLY

(4) (2 UPPER & 2 LOWER) ASSEMBLIES REQUIRED PER JOINT.

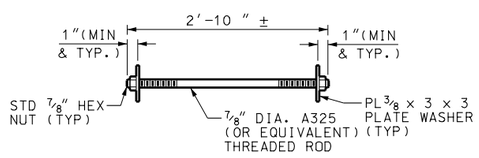

UPPER CONNECTION THREADED ROD DETAILS

(1) UPPER THREADED ROD (W/2 PL 3/8 x 3 x 3 PLATE WASHERS & 2 STD HEX NUTS) REQUIRED PER JOINT.

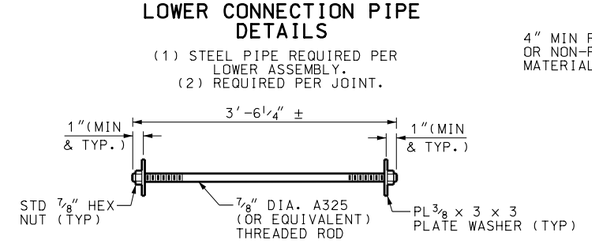

LOWER CONNECTION THREADED ROD DETAILS

(1) LOWER THREADED ROD (W/2 PL 3/8 x 3 x 3 PLATE WASHERS & 2 STD HEX NUTS) REQUIRED PER JOINT.

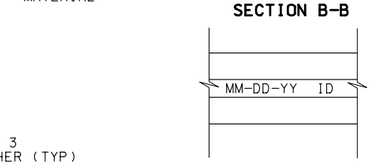

BARRIER MARKINGS
SEE NOTE 7

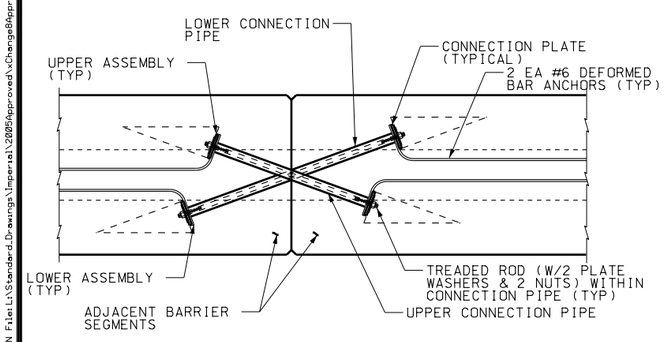

TYPE X JOINT INSTALLATION DETAIL

BARRIER REINFORCING AND TYPE X JOINT BLOCK-OUT DIMENSIONS NOT SHOWN FOR CLARITY.

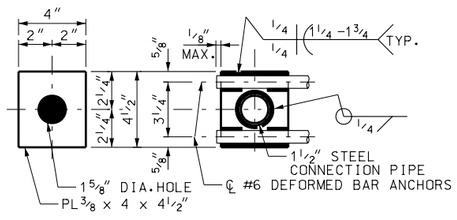

PLATE DIMENSIONS **WELDING DETAILS**

CONNECTION PLATE DETAILS

(1) PLATE REQUIRED PER ASSEMBLY.
(4) REQUIRED PER JOINT.
GALVANIZE ALL STEEL FITTINGS FOR JOINT TYPE AFTER FABRICATION.

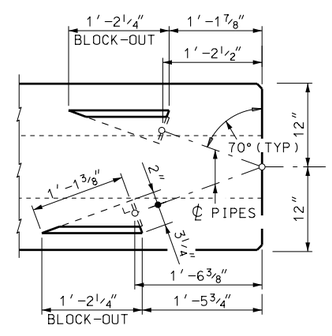

BARRIER PLAN AT JOINT (TYP.)

NOTES:

1. USE CLASS AA(AE) CONCRETE.
2. USE COATED REINFORCING STEEL.
3. CONDUIT TROUGH MAY BE OMITTED, AS SHOWN ELSEWHERE OR AS DIRECTED BY THE ENGINEER.
4. GALVANIZE ALL STEEL COMPONENTS AFTER FABRICATION EXCEPT REINFORCING STEEL UNLESS NOTED OTHERWISE.
5. IN THE TRANSITION FROM PRECAST CSCB TO CRASH CUSHION OR W-BEAM GUARD RAIL INSTALL CONSTANT SLOPE TRANSITION SECTION AS PER STD DWG BA 3B.
6. WHEN MATCHING INTO EXISTING CAST IN PLACE BARRIER. STD DWG BA 3B USE LOOP CONNECTION ON CAST IN PLACE END AND X-CONNECTION ON THE OTHER END.
7. MARK EACH BARRIER WITH 1 1/2" NUMBERS INDICATING THE DATE OF CASTING AND IDENTIFICATION NUMBER SUPPLIED BY THE INSPECTOR. IMPRESSED 1/4" DEEP INTO THE TOP CENTER OF THE BARRIER.
8. FOR BARRIER SEAL DETAILS SEE STD DWG BA 1B.

WEIGHT OF PRECAST CONSTANT SLOPE CONCRETE BARRIER 717 lbs/ft

NO.	DATE	APPR.	REMARKS
1	11/30/06	SA	NEW DRAWING.

REVISIONS

UTAH DEPARTMENT OF TRANSPORTATION
STANDARD DRAWINGS FOR ROAD & BRIDGE CONSTRUCTION
SALT LAKE CITY, UTAH

RECOMMENDED FOR APPROVAL — NOV.30,2006 DATE
CHAIRMAN STANDARDS COMMITTEE APPROVED — NOV.30,2006 DATE
DEPUTY DIRECTOR

PRECAST CONSTANT SLOPE CONCRETE BARRIER
(TYPE X JOINT CONNECTION)
STANDARD DRAWING TITLE

STD DWG
BA 3C

DGN File: L:\Standard Drawings\Imperial\2005\Approved\x\ChangeB\Approved\BA03C.dgn
18-DEC-2006