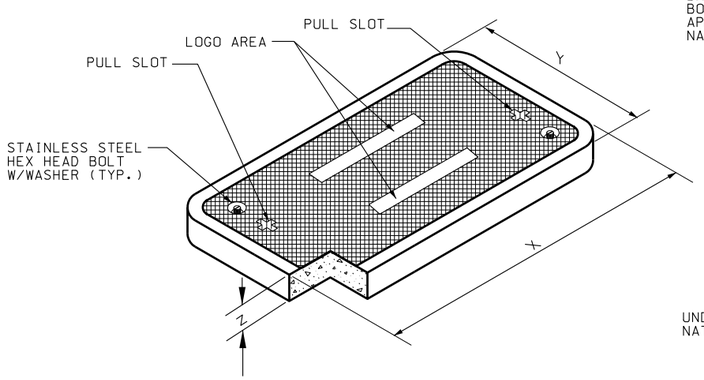

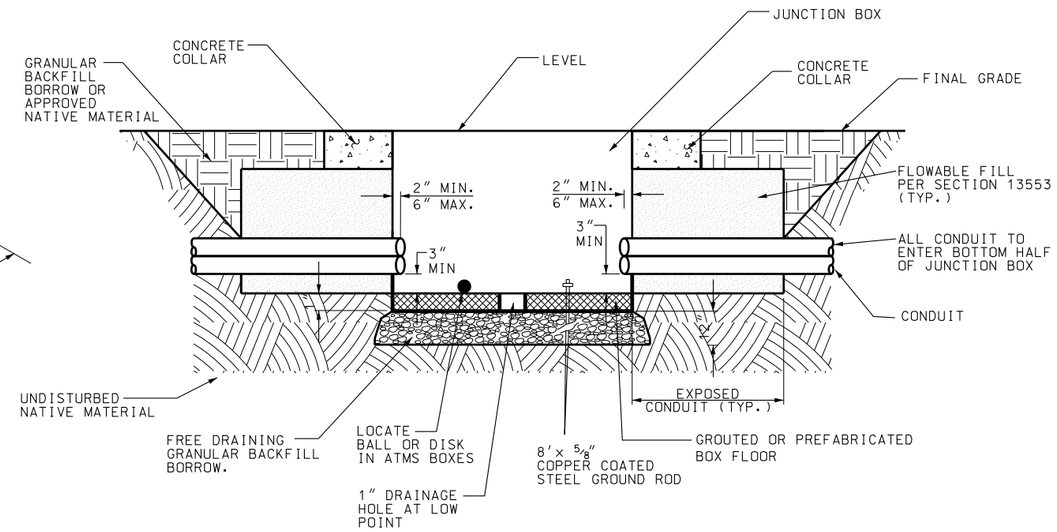

JUNCTION BOX CONDUIT PENETRATION DETAIL

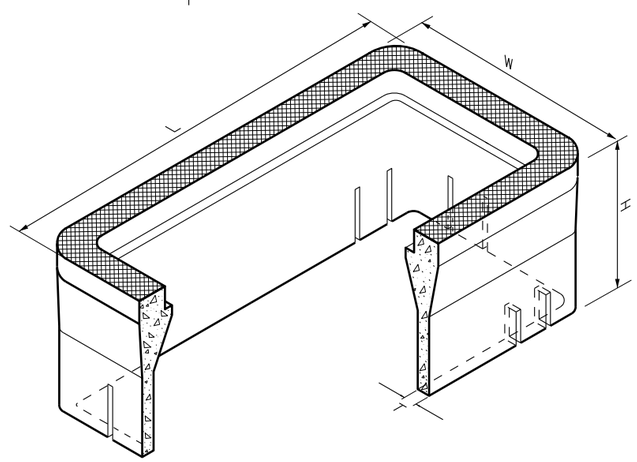

BOX AND LID DIMENSIONS

BOX TYPE	"L" inch	"W" inch	"H" inch	"T" inch	"X" inch	"Y" inch	"Z" inch
I-PC	25	16	24	1 1/2	23 1/4	13 3/4	2
II-PC	37 5/8	26	24	1 1/2	35 5/8	24	3
III-PC	49 5/8	32 1/8	24	2	47 5/8	30 1/8	3

NOTES:

1. STAMP BOX LOGO INTO THE LID FROM THE FACTORY. (SEE SECTION 13554).
2. DO NOT PLACE JUNCTION BOXES IN THE TRAVELED WAY OR ON FREEWAY SHOULDERS.
3. CONCRETE COLLAR WIDTH VARIES WHEN ADJACENT TO ATMS CABINETS. REFER TO AT AND SL SERIES STD DWGS.
4. PROVIDE CONCRETE COLLARS EXCEPT WITHIN CONCRETE PAVED AREAS.
5. INSTALL CONDUIT PLUG PER SECTION 13554.
6. ALIGN ATMS CONDUIT BY COLOR ON EACH SIDE OF THE JUNCTION BOX.

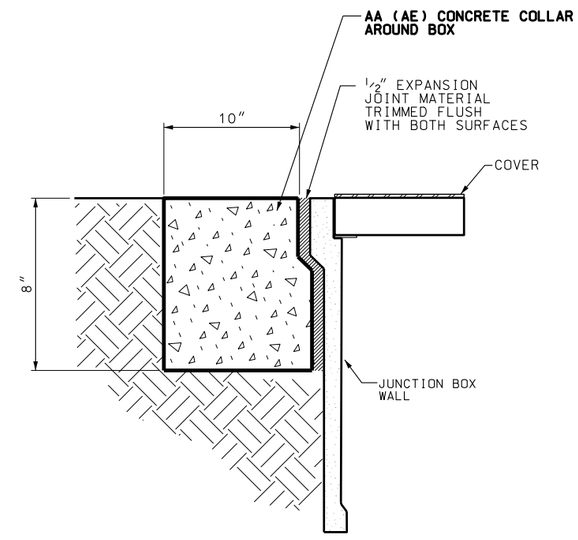

JUNCTION BOX CONCRETE COLLAR DETAIL

TABLE 1. JUNCTION BOX LID STATIC VERTICAL LOAD RATING

MINIMUM DESIGN LOAD (lb)	MINIMUM TEST LOAD (lb)	TEST AREA (inch)
16,000	33,500	10 x 20

SUPPLEMENTAL DRAWING

REVISIONS

NO.	DATE	APPR.	REMARKS
1	2/24/05	S.S.	REMOVED LOAD 3 RATING BOXES AND REVISED DESIGN & TEST LOAD RATINGS.
2	02/23/06	L.M.	TABLE 1 AND TABLE 2 CHANGED TO ELIMINATE LOAD RATING 2, FREEWAY AND ARTERIAL
3	02/22/07	T.M.	APPLICATION DETAILS REMOVED. ADDED FLOW FILL LIMITS. REMOVED TERMINAL BLOCK AND LOAD RATING TABLE, CORRECTED BOLT CALLOUTS, ADDED LOCATE BALL, MODIFIED NOTES.

UTAH DEPARTMENT OF TRANSPORTATION
STANDARD DRAWINGS FOR ROAD AND BRIDGE CONSTRUCTION
SALT LAKE CITY, UTAH

RECOMMENDED FOR APPROVAL — FEB.22,2007 DATE
CHAIRMAN STANDARDS COMMITTEE APPROVED — FEB.22,2007 DATE
DEPUTY DIRECTOR

POLYMER-CONCRETE JUNCTION BOX DETAILS
STANDARD DRAWING TITLE

STD DWG
AT 7

DGN File: L:\Standard Drawings\Imperial\2005\Approved\Supp\Approved\sa07.dgn
06-MAR-2007