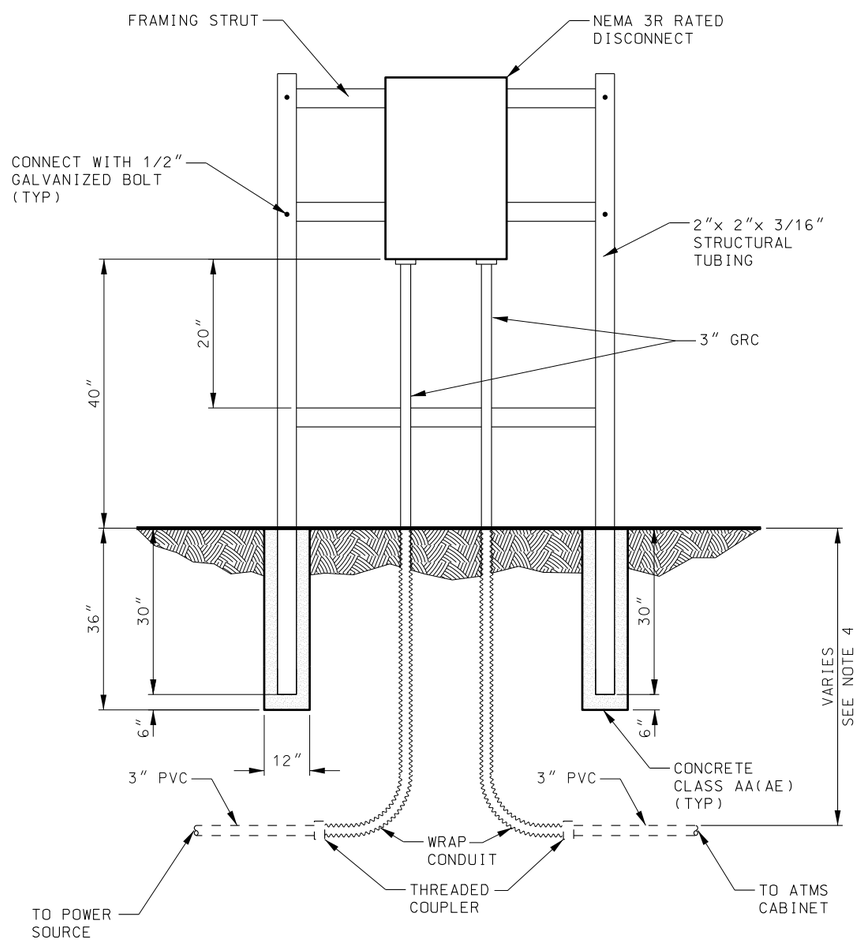

A / AT 9 SUPPLEMENTAL DISCONNECT FRAME

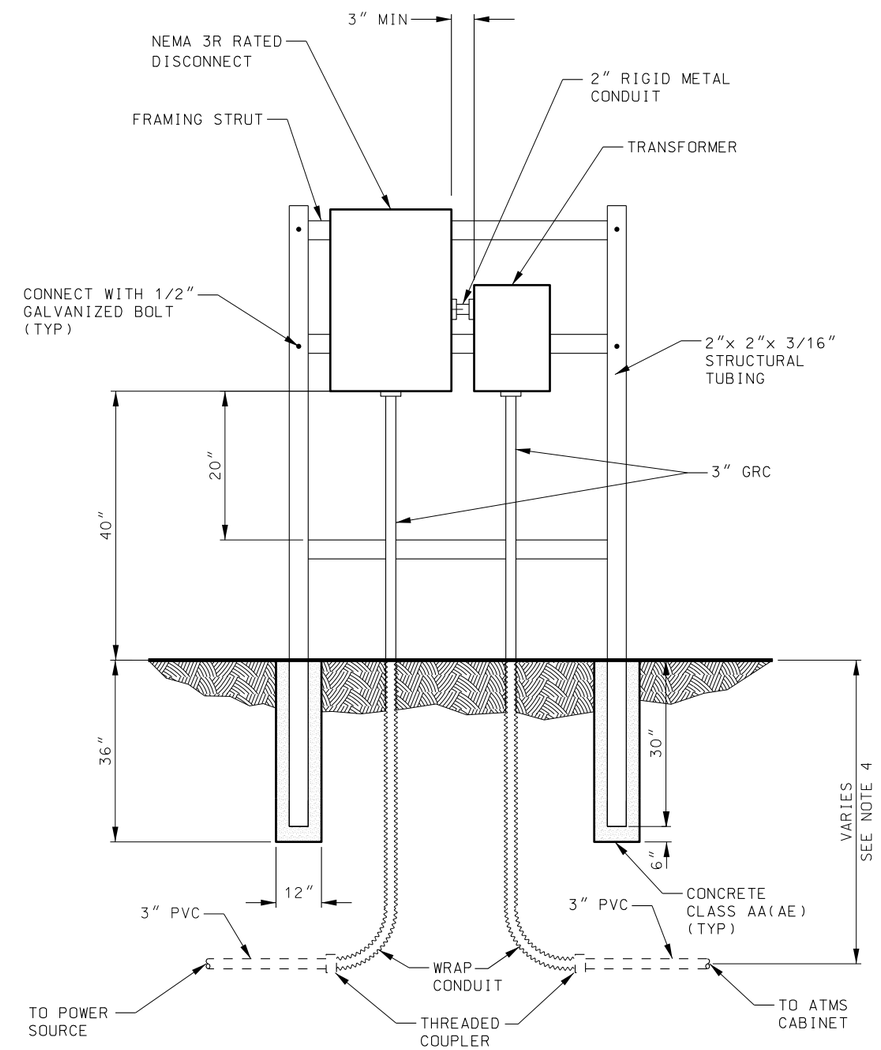

B / AT 9 SUPPLEMENTAL DISCONNECT WITH TRANSFORMER FRAME

NOTE:

1. FRAME SHOULD BE LOCATED BETWEEN 10 TO 15 FEET FROM CABINET.
2. ROUND OFF SHARP EDGES OF STRUCTURAL TUBING.
3. ATTACH TRANSFORMER AND DISCONNECT TO FRAMING STRUT WITH WATERTIGHT GASKETS AND GALVANIZED HARDWARE.
4. FOR CONDUIT DEPTH REFER TO SECTION 13553.

SUPPLEMENTAL DRAWING

REVISIONS

NO.	DATE	APPR.	REMARKS
1	2/24/05	S.S.	DRAWING REPLACED. TITLE CHANGED.
2	02/22/07	TJM	ADDED NOTE 2-4. UPDATED ALL DETAILS.

UTAH DEPARTMENT OF TRANSPORTATION
STANDARD DRAWINGS FOR ROAD AND BRIDGE CONSTRUCTION
SALT LAKE CITY, UTAH

RECOMMENDED FOR APPROVAL — FEB.22.2007 DATE
CHAIRMAN STANDARDS COMMITTEE APPROVED — FEB.22.2007 DATE
DEPUTY DIRECTOR

ATMS CABINET DISCONNECT AND TRANSFORMER FRAME

STANDARD DRAWING TITLE

STD DWG
AT 9

DGN File:L:\Standard Drawings\Imperial\2005\Approved\x\Suppl\approved\at09.dgn
06-MAR-2007