REINFORCING STEEL SCHEDULE

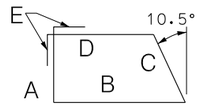

TYPE I

(FOR 1 SECTION ONLY)

BENT BARS

(ALL DIMENSIONS ARE OUT TO OUT)

MARK	SIZE	NO.	TYPE	LENGTH	A	B	C	D	E
C1	#3	1	1	4′-1″	9½″	12½″	10″	10″	3½″
C2	↑	↑	↑	3′-8″	7½″	11½″	9″	9″	↑
C3				3′-0″	6½″	10½″	8″	8″	
C4				2′-11″	5½″	9″	5½″	7½″	
C5				2′-6½″	4½″	8″	4½″	6½″	
C6	↓	↓	↓	2′-3½″	3½″	7″	3½″	5½″	3½″
C7	#3	1	1	1′-11½″	3″	6″	3½″	5″	3″

STRAIGHT BARS

MARK	SIZE	NO.	LENGTH
B1	#4	4	6′-8″
B2	#4	2	8″

NOTE:
ALL REINFORCING BARS TO HAVE
1½″ MINIMUM COVER.

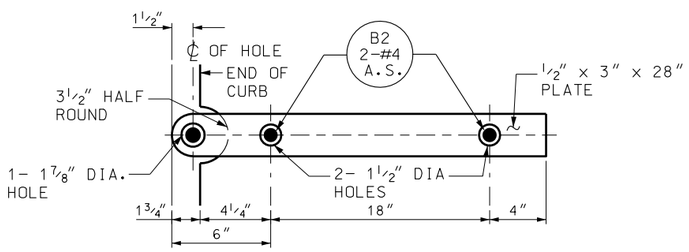

CONNECTION BAR

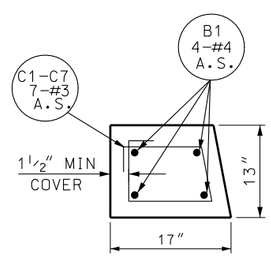

SECTION A-A

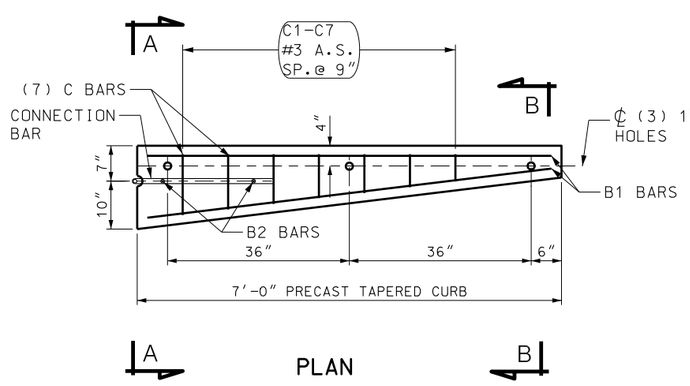

PLAN

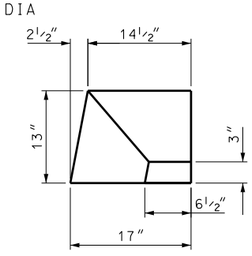

SECTION B-B

CONSTANT SLOPE CURB SECTION

REINFORCING STEEL SCHEDULE

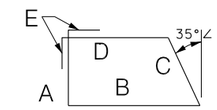

TYPE I

(FOR 1 SECTION ONLY)

BENT BARS

(ALL DIMENSIONS ARE OUT TO OUT)

MARK	SIZE	NO.	TYPE	LENGTH	A	B	C	D	E
C1	#3	1	1	4′-2½″	9″	14½″	11″	9″	3½″
C2	↑	↑	↑	3′-10½″	8″	13½″	10″	8″	↑
C3				3′-6½″	7″	12½″	9″	8″	
C4				3′-2″	6″	11″	8″	7″	
C5				2′-10″	5½″	10″	6½″	6″	
C6	↓	↓	↓	2′-6″	4½″	8½″	5½″	5″	↓
C7	#3	1	1	2′-2½″	4½″	8″	5″	5″	3½″

STRAIGHT BARS

MARK	SIZE	NO.	LENGTH
B1	#4	4	6′-9″
B2	#4	2	8″

NOTE:
ALL REINFORCING BARS TO HAVE
1½″ MINIMUM COVER.

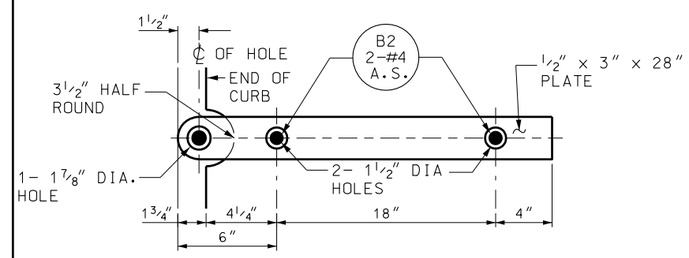

CONNECTION BAR

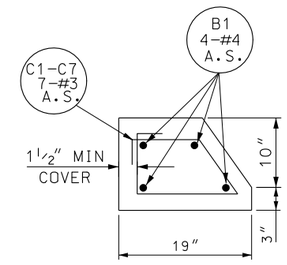

SECTION A-A

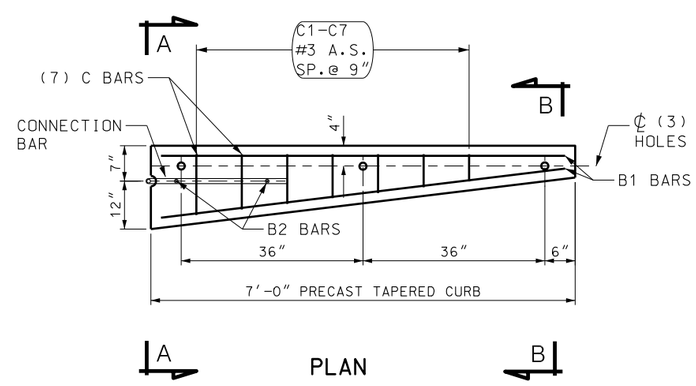

PLAN

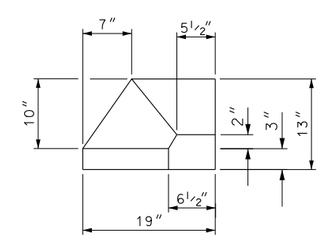

SECTION B-B

NEW JERSEY SHAPED CURB SECTION

SUPPLEMENTAL DRAWING

NO.	DATE	APPR.	REMARKS
1	02/24/05	G.S.	NEW DRAWING.
2	02/22/07	G.S.	UPDATED CONNECTION BAR HOLES.

REVISIONS

UTAH DEPARTMENT OF TRANSPORTATION
STANDARD DRAWINGS FOR ROAD AND BRIDGE CONSTRUCTION
SALT LAKE CITY, UTAH

RECOMMENDED FOR APPROVAL — FEB.22,2007 DATE
CHAIRMAN STANDARDS COMMITTEE APPROVED — FEB.22,2007 DATE
DEPUTY DIRECTOR

W-BEAM GUARDRAIL TRANSITION CURB SECTIONS

STANDARD DRAWING TITLE

STD DWG
BA 4C

DGN File:L:\Standard Drawings\Imperial\2005\Approved\+Suppl\Approved\BA04C.dgn
06-MAR-2007