SHELF

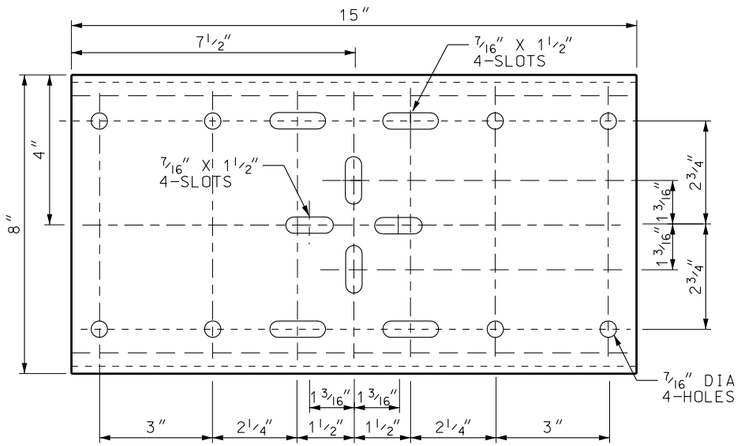

PLATFORM

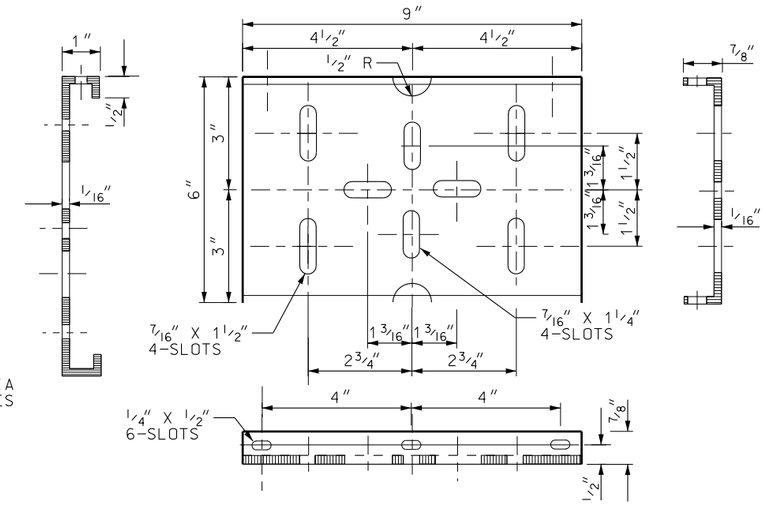

CANTILEVERED MAILBOX SUPPORT

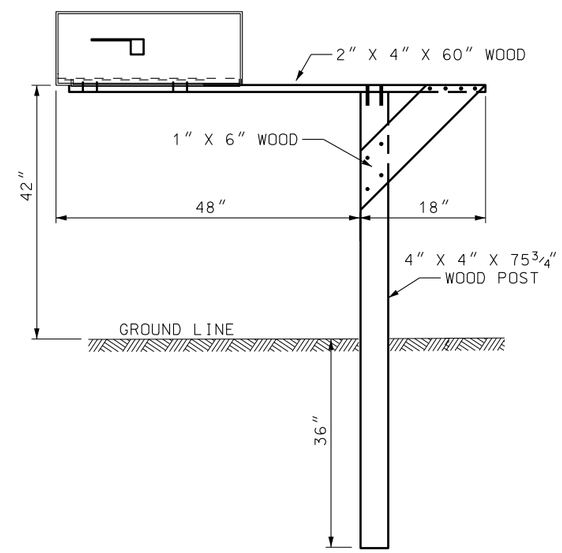

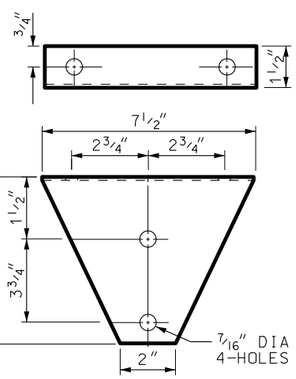

BRACKET

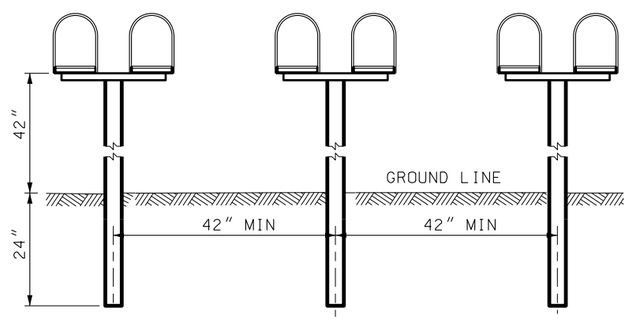

SPACING FOR MULTIPLE POST INSTALLATION

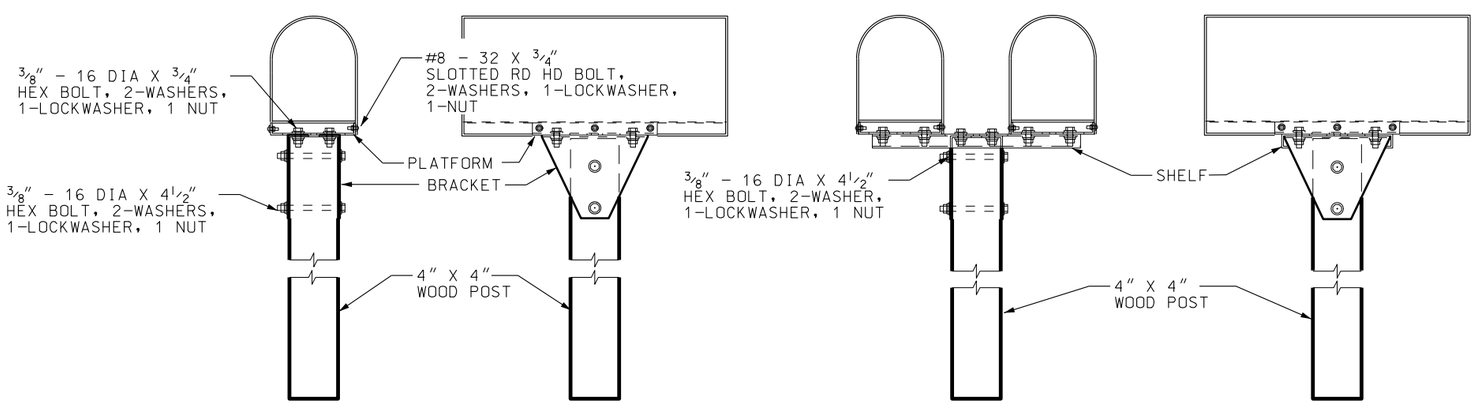

SINGLE AND DOUBLE MAILBOX ASSEMBLIES SERIES A

NOTE:

1. USE OF ALTERNATE SYSTEMS MEETING NCHRP-350 REQUIREMENTS ALLOWED AS APPROVED BY THE REGION TRAFFIC ENGINEER.

SUPPLEMENTAL DRAWING

REVISIONS

NO.	DATE	APPR.	REMARKS
1	02/22/07	MD	ASSEMBLY DETAIL REMOVED INCH MARK FROM THE 16 AND REMOVED 8" DIMENSION FROM BETWEEN MAIL BOXES.

UTAH DEPARTMENT OF TRANSPORTATION
STANDARD DRAWINGS FOR ROAD AND BRIDGE CONSTRUCTION
SALT LAKE CITY, UTAH

RECOMMENDED FOR APPROVAL — FEB.22,2007 DATE
CHAIRMAN STANDARDS COMMITTEE APPROVED — FEB.22,2007 DATE
DEPUTY DIRECTOR

NEWSPAPER AND MAILBOX SUPPORT HARDWARE
STANDARD DRAWING TITLE

STD DWG
GW 8

DGN File:L:\Standard Drawings\Imperial\2005Approved\SupplApproved\GW08.dgn
06-MAR-2007