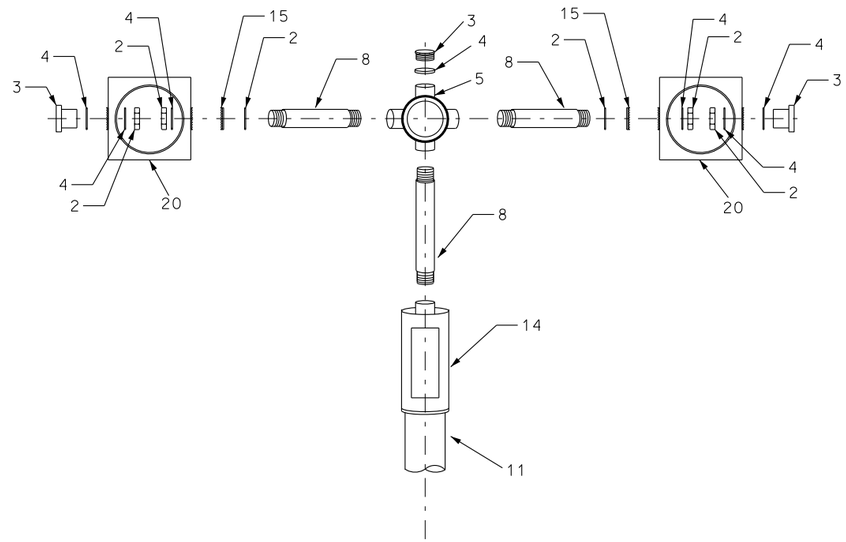

A / AT 4 ADVANCE FLASHING BEACON SIGNAL HEAD MOUNTING DETAILS

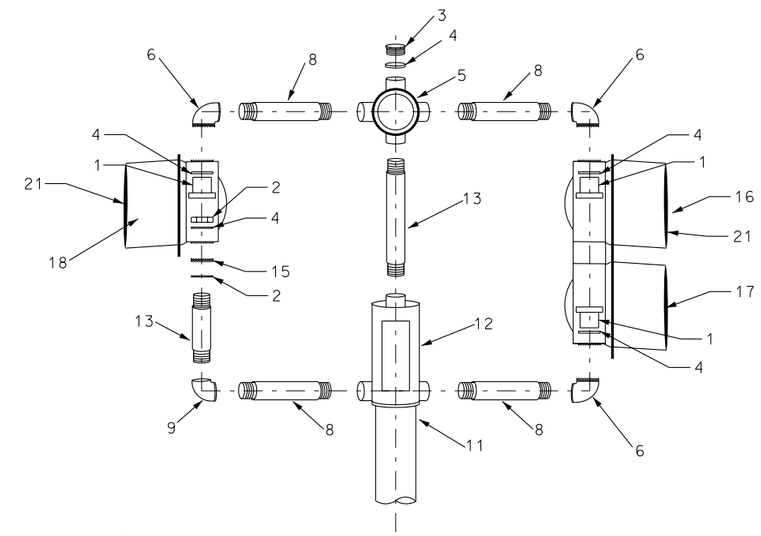

B / AT 4 TOP SIGNAL HEAD MOUNTING DETAILS WITH ENFORCEMENT INDICATION

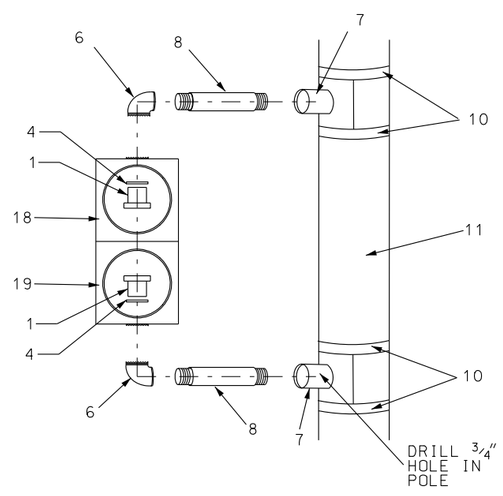

C / AT 4 SIDE SIGNAL HEAD MOUNTING DETAILS

(SEE NOTE 1)

DETAIL LEGEND:

1. LOCK NIPPLE, BRASS, 1½" x 1¾"
2. LOCK NUT, BRASS, 1½"
3. CAP, ORNAMENTAL, LONG, BRASS, 1½" x 1¾"
4. WASHER, STAINLESS STEEL
5. HUB, CENTER W/COVER PLATE 4-WAY, BRASS
6. ELBOW, 90°, GALVANIZED, THREADED INSIDE, 1½" SERRATED
7. ROUND POLE PLATE, GALVANIZED
8. PIPE, GALVANIZED, THREADED BOTH ENDS, 1½" x 12",
9. ELBOW, 90°, GALVANIZED, THREADED INSIDE, 1½"
10. BANDS, STAINLESS STEEL, ¾"
11. POLE SHAFT
12. POST TOP TERMINAL COMPARTMENT, 2 WAY, BRASS, WITH NO TERMINAL BLOCK
13. PIPE, GALVANIZED, LENGTH VARIABLE, THREADED BOTH ENDS, 1½"
14. POST TOP TERMINAL COMPARTMENT, BRASS, WITH NO TERMINAL BLOCK
15. WASHER, SERRATED, 1½"
16. SIGNAL HEAD - RED LED, 12"
17. SIGNAL HEAD - GREEN LED, 12"
18. SIGNAL HEAD - RED LED, 8"
19. SIGNAL HEAD - GREEN LED, 8"
20. SIGNAL HEAD - AMBER LED, 8"
21. VISOR - 8" AND 12"

NOTE:

1. USE SIDE SIGNAL HEAD ONLY ON SINGLE LANE RAMPS.

SUPPLEMENTAL DRAWING

REVISIONS

NO.	DATE	APPR.	REMARKS
1	04/28/05	S.S.	UPDATED AND REARANGED DETAILS.
2	6/21/06	TJM	ADDED VISOR AND DELETED POWDER NOTE.
3	02/22/07	TJM	ADDED #21 TO DETAIL LEGEND AND CALLOUT IN DETAIL B.
4	04/26/07	TJM	CORRECTED DETAIL AT 4B FOR REVERSED NUMBERS.

UTAH DEPARTMENT OF TRANSPORTATION
STANDARD DRAWINGS FOR ROAD AND BRIDGE CONSTRUCTION
SALT LAKE CITY, UTAH

RECOMMENDED FOR APPROVAL — APR.26.2007 DATE
CHAIRMAN STANDARDS COMMITTEE APPROVED — APR.26.2007 DATE
DEPUTY DIRECTOR

TYPICAL RAMP METER SIGNAL HEAD MOUNTING

STANDARD DRAWING TITLE

STD DWG
AT 4

08-MAY-2007 DGN File:L:\Standard.Drawings\Imperial\2005Approved\x.Supplemental.Issues\x.Supp2Approved\st04.dgn