NOTES 1, 6

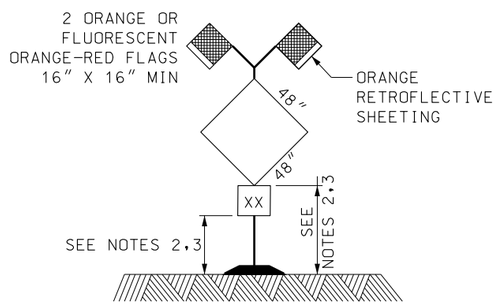

TYPICAL PORTABLE SIGN SUPPORTS INSTALLATION WITH FLAGS

SEE NOTES 4, 5, 6

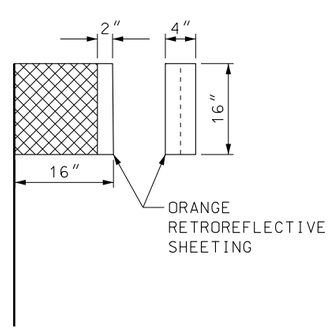

FLAG DETAIL

SEE NOTE 8

NOTES:

1. CLOSE ROADWAYS WITH TYPE III BARRICADES. EXTEND THE BARRICADES ACROSS INTENDED ROAD CLOSURE A MINIMUM OF 3/4 OF THE ROADWAY STARTING FROM THE CENTER OF THE ROADWAY AND EXTENDING IN BOTH DIRECTIONS TOWARD THE SHOULDERS. PLACE A "ROAD CLOSED" SIGN (R11-2) OVER THE CENTER LINE AND THE APPROPRIATE "DETOUR" ARROW SIGNS (M4-10 L OR R) ON EACH SIDE OF THE "ROAD CLOSED" SIGN. DETOUR ARROWS ARE NOT REQUIRED IF DETOUR IS NOT AT ROAD CLOSURE.

2. USE A 12 INCH MINIMUM MOUNTING HEIGHT TO THE BOTTOM OF THE LOWEST SIGN FOR SIGNS ON PORTABLE SUPPORTS.

3. USE A 36 INCH MINIMUM MOUNTING HEIGHT TO THE BOTTOM OF THE LOWEST SIGN FOR SIGNS ON PORTABLE SUPPORTS PLACED AMONG CHANNELIZING DEVICES.

4. USE A MINIMUM 84 INCH MOUNTING HEIGHT FROM ROADWAY SURFACE FOR SIGNS USING POST TYPES P1, P2 OR P3. REFER TO SN SERIES STANDARD DRAWINGS.

5. PLACE TWO ORANGE STRIPS OF RETROREFLECTIVE SHEETING, 4 INCHES x 24 INCHES, VERTICALLY, 12 INCHES FROM THE RIGHT AND LEFT CORNERS ON THE BACK OF SIGNS USED WITH PORTABLE SUPPORTS.

6. USE SANDBAGS WITH SAND OR OTHER COMPARABLE SOFT MATERIAL AS BALLAST. DO NOT PLACE BALLAST HIGHER THAN 12 INCHES ABOVE THE ROADWAY AND DO NOT COVER ANY REFLECTIVE AREA OF RAILS OR SIGNS.

7. SIGNS ON PORTABLE SUPPORTS MAY BE USED FOR 7 DAYS OR LESS. USE PERMANENTLY MOUNTED SIGNS FOR LONGER THAN 7 DAYS UNLESS USE OF PORTABLE SIGN SUPPORTS RECEIVES APPROVAL FROM THE REGION TRAFFIC ENGINEER.

8. USE 4 INCH x 16 INCH ORANGE RETROREFLECTIVE SHEETING SECURELY FASTENED TO THE OUTSIDE EDGE OF THE FLAG. ENSURE TWO INCHES OF THE SHEETING IS VISIBLE FROM EACH SIDE.

SUPPLEMENTAL DRAWING

REVISIONS

NO.	DATE	APPR.	REMARKS
1	04/26/07	JL	TITLE CHANGED. DRAWING COMPLETELY MODIFIED.

UTAH DEPARTMENT OF TRANSPORTATION
STANDARD DRAWINGS FOR ROAD AND BRIDGE CONSTRUCTION
SALT LAKE CITY, UTAH

RECOMMENDED FOR APPROVAL — APR.26,2007 DATE
CHAIRMAN STANDARDS COMMITTEE APPROVED — APR.26,2007 DATE
DEPUTY DIRECTOR

WORK ZONE SIGNING
STANDARD DRAWING TITLE

STD DWG
TC 1B

DGN File:L:\Standard Drawings\Imperial\2005Approved\x-Supplemental Issues\x-Supp2Approved\TC01B.dgn
08-MAY-2007