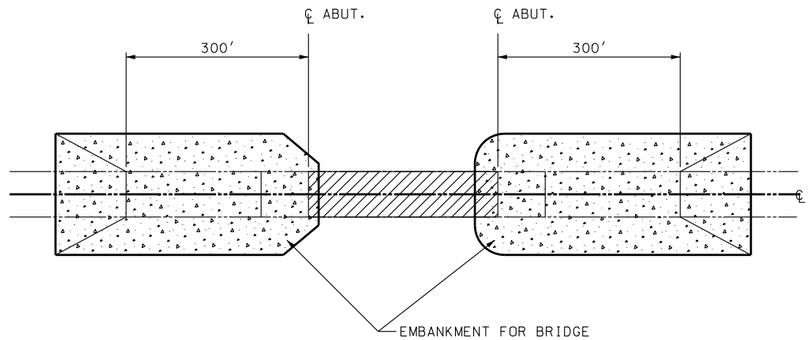

* THEORETICAL SLOPE MAXIMUM OF 1:1 TO TRANSITION BETWEEN EMBANKMENT MATERIALS.

PLAN VIEW APPROACH EMBANKMENTS

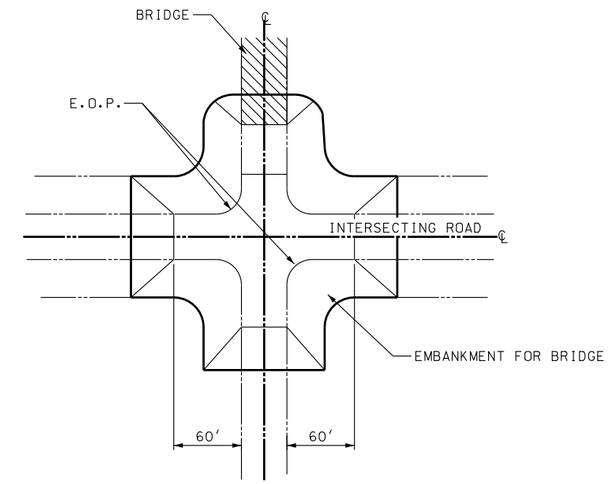

PLAN VIEW INTERSECTING ROADWAY EMBANKMENTS

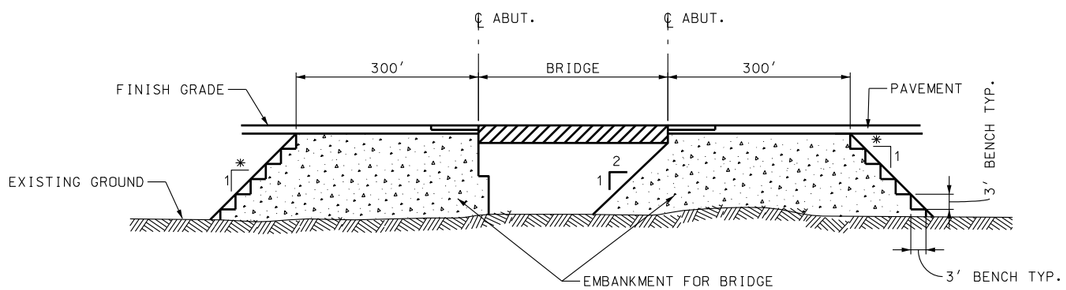

CL PROFILE VIEW APPROACH EMBANKMENTS

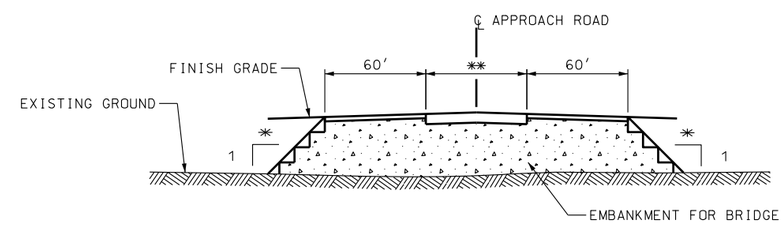

CL PROFILE VIEW INTERSECTING ROADWAY EMBANKMENTS

** INDICATES EDGE OF PAVEMENT TO EDGE OF PAVEMENT DIMENSION.

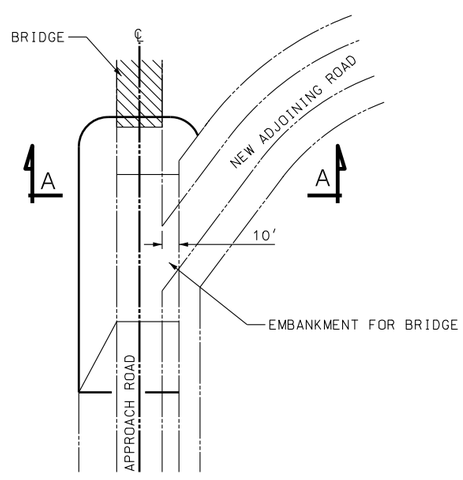

PLAN VIEW ADJOINING EMBANKMENTS

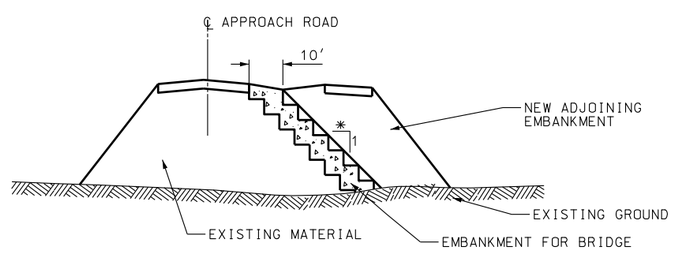

SECTION A-A VIEW

* THEORETICAL SLOPE MAXIMUM OF 1:1 TO TRANSITION BETWEEN EMBANKMENT MATERIALS.

SUPPLEMENTAL DRAWING

REVISIONS

NO.	DATE	APPR.	REMARKS
1	04/26/07	MR	NEW DRAWING.

UTAH DEPARTMENT OF TRANSPORTATION
STANDARD DRAWINGS FOR ROAD AND BRIDGE CONSTRUCTION
SALT LAKE CITY, UTAH

RECOMMENDED FOR APPROVAL — APR.26,2007 DATE
CHAIRMAN STANDARDS COMMITTEE APPROVED — APR.26,2007 DATE
DEPUTY DIRECTOR

EMBANKMENT FOR BRIDGE PLACEMENT

STANDARD DRAWING TITLE

STD DWG
DD 16

DGN File:L:\Standard_Drawings\Imperial\2005Approved\x_Supplemental_Issues\xSupp2Approved\DD16.dgn
08-MAY-2007