Utah Department of Transportation

2017 Standard Drawings

For Road and Bridge Construction

January 1, 2017

Introduction

These Standard Drawings are for use in Utah Department of Transportation construction contracts. The book incorporates all Supplemental Drawings approved for the 2012 Standard Drawing Book and all approved changes in preparing the 2017 Edition.

All drawings apply on every Department construction project and as such are included by reference. Only drawings with changes approved by a Supplemental Drawing from the Standards Section or design plan sheets can be included in individual projects. Notes labeled "Design-Only" are excluded from the contract. Sheets labeled in the bottom-right of the sheet as "Design-Only" are excluded from the contract.

References

Electronic files and other related information for all Standards Drawings are available at: http://www.udot.utah.gov/go/2017standards

Reference to external publications in any 2017 Standard is to the most recent version, issue, or edition in effect on the date of the *Notice to Bidders*, unless stated otherwise.

Page Numbering

The Standard Drawings of this book are numbered by Series. There is no cumulative page numbering.

STANDARD DRAWINGS INDEX (Initial Issue, January 1, 2017)
UTAH DEPARTMENT OF TRANSPORTATION

NUMBER	TITLE	CURRENT DATE
	Advanced Traffic Management System (AT)	
AT 1	Legend Sheet	01/01/17
AT 2	Ramp Meter Signal Head Details	01/01/17
AT 3	Ramp Meter Detection Layout and Cabinet Placement	01/01/17
AT 4	Loop Detector and Wiring Details	01/01/17
AT 5	Ramp Meter Details Signing and Detection	01/01/17
AT 6	Conduit Details	01/01/17
AT 7A	Polymer Concrete Junction Box Details	01/01/17
AT 7B	Precast Concrete Fiber Optic and Utility Vault Details	01/01/17
AT 8	ATMS Cabinet	01/01/17
AT 9	ATMS Cabinet Disconnect and Transformer Frame	01/01/17
AT 10A	CCTV Mounting Detail and Wiring Diagram	01/01/17
AT 10B	CCTV Mounting Detail and Wiring Diagram	01/01/17
AT 10C	CCTV Mounting Detail and Wiring Diagram	01/01/17
AT 10D	Camera Cable Splicing Diagrams	01/01/17
AT 10E	CCTV DIP Switch Settings	01/01/17
AT 11A	CCTV Pole Mounting Details	01/01/17
AT 11B	Non-Intrusive Detector Mounting Details	01/01/17
AT 11C	Pole Mounted Cabinet Bracket	01/01/17
AT 12	CCTV Foundations for CCTV Poles	01/01/17
AT 13	Not Used	
AT 14	Solar Traffic Counting Station	01/01/17
AT 15	RWIS Site and Foundation Details	01/01/17
AT 16	RWIS Tower Base and Service Pad Layout	01/01/17
AT 17	RWIS Ground Rod Installation and Tower Grounding	01/01/17
AT 18	Utility Marker Post Details	01/01/17
AT 19	Utility Marker Post Locations	01/01/17
AT 20	Electronic Toll Lanes Control Systems Cabinet Layout	01/01/17
AT 21	Electronic Toll Lanes Control Systems ETC Gantry	01/01/17
AT 22	Attachment Details	01/01/17
AT 23	ETC Equipment Wiring Diagram	01/01/17
AT 24	ETC-OSI Laser System Wiring Diagram	01/01/17
	Barriers (BA)	
BA 1A1	Concrete Barrier General Notes and Standard Details (1 of 2)	01/01/17
BA 1A2	Concrete Barrier General Notes and Standard Details (2 of 2)	01/01/17
BA 1B	Concrete Barrier Median Installation	01/01/17
BA 1C	Concrete Barrier Shoulder Installation	01/01/17
BA 1D	Concrete Barrier Layout	01/01/17
BA 1E	Concrete Barrier Column Protection	01/01/17
BA 2A	Precast Concrete Barrier – 32 Inch New Jersey Shape	01/01/17

BA 2B	Precast Concrete Barrier – 32 Inch New Jersey Shape, Sloped End Section (For Speeds ≤ 40 MPH)	01/01/17
BA 2C	Precast Concrete Barrier – 32 Inch New Jersey Shape, Median Small Sign Section	01/01/17
BA 2D	Cast-In-Place Concrete Barrier – 32 Inch New Jersey Shape, 42 Inch Constant Slope Barrier Transition	01/01/17
BA 2E	Precast Concrete Half Barrier – 32 Inch New Jersey Shape	01/01/17
BA 3A1	Cast-In-Place Concrete Constant Slope Barrier – 42 Inch 1 of 3	01/01/17
BA 3A2	Cast-In-Place Concrete Constant Slope Barrier – 42 Inch 2 of 3	01/01/17
BA 3A3	Cast-In-Place Concrete Constant Slope Barrier – 42 Inch 3 of 3	01/01/17
BA 3A4	Cast-In-Place Concrete Constant Slope Barrier with Scuppers – 42 Inch	01/01/17
BA 3B	Cast-In-Place Concrete Constant Slope Barrier – 42 Inch, Electrical Details	01/01/17
BA 3C1	Cast-In-Place Concrete Constant Slope Barrier – 42 Inch, Sign Structure Foundation Transition 1 of 2	01/01/17
BA 3C2	Cast-In-Place Concrete Constant Slope Barrier – 42 Inch, Sign Structure Foundation Transition 2 of 2	01/01/17
BA 3D	Cast-In-Place Concrete Constant Slope Barrier – 42 Inch, Median Small Sign Section	01/01/17
BA 3E1	Cast-In-Place Concrete Constant Slope Barrier – 42 Inch, TL-5 1 of 2	01/01/17
BA 3E2	Cast-In-Place Concrete Constant Slope Barrier – 42 Inch, TL-5 2 of 2	01/01/17
BA 3E3	Cast-In-Place Concrete Constant Slope Barrier with Scuppers – 42 Inch, TL-5	01/01/17
BA 3F1	Cast-In-Place Concrete Constant Slope Barrier – 42 Inch, Bridge Parapet Transition 1 of 3	01/01/17
BA 3F2	Cast-In-Place Concrete Constant Slope Barrier – 42 Inch, Bridge Parapet Transition 2 of 3	01/01/17
BA 3F3	Cast-In-Place Concrete Constant Slope Barrier – 42 Inch, Bridge Parapet Transition 3 of 3	01/01/17
BA 3G	Precast Concrete Constant Slope Barrier – 42 Inch	01/01/17
BA 3H	Precast Concrete Constant Slope Barrier – 42 Inch, Sloped End Section (For Speeds ≤ 40 MPH)	01/01/17
BA 3I1	Precast Concrete Constant Slope Barrier – 42 Inch, Median Small Sign Section 1 of 2	01/01/17
BA 3I2	Precast Concrete Constant Slope Barrier – 42 Inch, Median Small Sign Section 2 of 2	01/01/17
BA 3J	Precast Concrete Constant Slope Barrier – 42 Inch, 32 Inch New Jersey Shape Transition	01/01/17
BA 3K1	Cast-In-Place Concrete Constant Slope Half Barrier – 42 Inch	01/01/17

BA 3K2	Cast-In-Place Concrete Constant Slope Half Barrier with Scuppers – 42 Inch	01/01/17
BA 3K3	Cast-In-Place Concrete Constant Slope Half Barrier – 42 Inch	01/01/17
BA 3K4	Cast-In-Place Concrete Constant Slope Half Barrier – 42 Inch	01/01/17
BA 3K5	Cast-In-Place Concrete Half Barrier – 42 Inch Constant Slope, 32 inch New Jersey Shape Barrier Transition	01/01/17
BA 3L	Precast Concrete Constant Slope Half Barrier – 42 Inch	01/01/17
BA 3M1	Cast-In-Place Concrete Constant Slope Barrier – 54 Inch 1 of 3	01/01/17
BA 3M2	Cast-In-Place Concrete Constant Slope Barrier – 54 Inch 2 of 3	01/01/17
BA 3M3	Cast-In-Place Concrete Constant Slope Barrier – 54 Inch 3 of 3	01/01/17
BA 3M4	Cast-In-Place Concrete Constant Slope Barrier with Scuppers – 54 Inch	01/01/17
BA 3N1	Cast-In-Place Concrete Constant Slope Barrier – 54 Inch, Median Small Sign Section 1 of 2	01/01/17
BA 3N2	Cast-In-Place Concrete Constant Slope Barrier – 54 Inch, Median Small Sign Section 2 of 2	01/01/17
BA 3O1	Cast-In-Place Concrete Constant Slope Barrier – 54 Inch, TL-5 1 of 3	01/01/17
BA 3O2	Cast-In-Place Concrete Constant Slope Barrier – 54 Inch, TL-5 2 of 3	01/01/17
BA 3O3	Cast-In-Place Concrete Constant Slope Barrier – 54 Inch, TL-5 3 of 3	01/01/17
BA 3O4	Cast-In-Place Concrete Constant Slope Barrier with Scuppers – 54 Inch, TL-5	01/01/17
BA 3P1	Cast-In-Place Concrete Constant Slope Barrier – 54 Inch, Bridge Parapet Transition 1 of 3	01/01/17
BA 3P2	Cast-In-Place Concrete Constant Slope Barrier – 54 Inch, Bridge Parapet Transition 2 of 3	01/01/17
BA 3P3	Cast-In-Place Concrete Constant Slope Barrier – 54 Inch, Bridge Parapet Transition 3 of 3	01/01/17
BA 3Q1	Cast-In-Place Concrete Constant Slope Barrier – 54 Inch, 42 Inch Constant Slope Barrier Transition	01/01/17
BA 3Q2	Cast-In-Place Concrete Constant Slope Barrier – 54 Inch, 32 Inch New Jersey Shape Barrier Transition	01/01/17
BA 4A	Midwest 31 Inch W-Beam Guardrail Hardware	01/01/17
BA 4B1	W-Beam Guardrail Transition Hardware	01/01/17
BA 4B2	W-Beam Guardrail Transition Layouts Approach End and Midwest 31 Inch Guardrail Trailing End	01/01/17
BA 4B3	W-Beam Guardrail Transition Curb Sections	01/01/17
BA 4B4	Midwest 31 Inch W-Beam Guardrail Median Barrier and Transition Hardware and Layout	01/01/17
BA 4C1	31 Inch W-Beam Guardrail Anchor Type 1	01/01/17
BA 4C2	W-Beam Guardrail Anchor Type II	01/01/17

BA 4D1	Midwest 31 Inch W-Beam Guardrail Installations	01/01/17
BA 4D2	Midwest 31 Inch W-Beam Guardrail Installations	01/01/17
BA 4D3	W-Beam Guardrail Typical Line Post Embedment Special Conditions	01/01/17
BA 4D4	Midwest 31 Inch W-Beam Guardrail Transition Layout	01/01/17
BA 4E	Not Used	
BA 4F1	W-Beam Guardrail 31 Inch Buried In Backslope Terminal	01/01/17
BA 4F2	31 Inch W-Beam Guardrail Buried In Backslope Terminal with Rub Rail	01/01/17
BA 4F3	W-Beam Guardrail Buried In Backslope Terminal Anchor	01/01/17
BA 4G	W-Beam Guardrail Curve Breakaway Details	01/01/17
BA 4H1	Midwest 31 Inch W-Beam Guardrail Long Span	01/01/17
BA 4H2	31 Inch W-Beam Guardrail with Precast Barrier for Span ≥ 25 FT	01/01/17
BA 4H3	Midwest 31 Inch W-Beam Guardrail Reduced Deflection Criteria	01/01/17
BA 4I	Not Used	
BA 4J1	Midwest 31 Inch W-Beam Guardrail Typicals Divided Roadways	01/01/17
BA 4J2	Midwest 31 Inch W-Beam Guardrail Typical MultiLane Arterial	01/01/17
BA 4J3	Midwest 31 Inch W-Beam Guardrail Typical 2 Lane 2 Way	01/01/17
BA 5A	Cable Barrier Typical Hardware and Foundation Requirements	01/01/17
BA 5B1	Cable Barrier Placement	01/01/17
BA 5B2	Cable Barrier Placement	01/01/17
BA 5C1	Cable Barrier W-Beam Anchor Assembly	01/01/17
BA 5C2	Cable Barrier Parapet Departure Bracket	01/01/17
BA 5D1	Median Cable Barrier W-Beam Double Sided and Freeway Crossover Anchor System (Type C; C.A.T.)	01/01/17
BA 5D2	Median Cable Barrier W-Beam Double Sided and Freeway Crossover Anchor System (Type C; FLEAT-MT)	01/01/17
BA 5E1	Cable Barrier W-Beam Narrow Median Parapet or Concrete Barrier Anchor	01/01/17
BA 5E2	Cable Barrier W-Beam Approach Transition	01/01/17
BA 5E3	Cable Barrier W-Beam Precast Concrete Barrier Trailing Anchor	01/01/17
BA 5F1	Cable Barrier W-Beam Single Sided Approach Anchor System	01/01/17
BA 5F2	Cable Barrier W-Beam Single Sided Departure Anchor System	01/01/17
BA 5G	Cable Barrier W-Beam Freeway/Expressway Right Shoulder Anchor System	01/01/17
BA 5H	Cable Barrier W-Beam Right Shoulder Application	01/01/17
BA 5I1	Cable Barrier with Existing W-Beam Approach	01/01/17
BA 5I2	Cable Barrier with Existing W-Beam Trailing End	01/01/17
BA 5J1	Cable Barrier Median Hazard Protection	01/01/17

BA 5J2	Cable Barrier Span ≥ 15 Ft to ≤ 30 Ft	01/01/17
BA 5K	Cable Barrier with Existing Crash Cushion Median Application	01/01/17

Catch Basins and Cleanouts (CB)

CB 1	Curb and Gutter Inlet	01/01/17
CB 2	Open Curb Inlet	01/01/17
CB 3	Shallow Catch Basin	01/01/17
CB 4	Open Curb Shallow Catch Basin	01/01/17
CB 5A	Standard Catch Basin and Cleanout Box	01/01/17
CB 5B	Standard Catch Basin and Cleanout Box Section	01/01/17
CB 6A	Drop Inlet Type “A”	01/01/17
CB 6B	Berm Apron with Drop Inlet Type “A”	01/01/17
CB 7A	Drop Inlet Type “B”	01/01/17
CB 7B	Normal Apron with Drop Inlet Type “B”	01/01/17
CB 8A	Double Catch Basin	01/01/17
CB 8B	Double Catch Basin	01/01/17
CB 9A	Standard Catch Basin and Cleanout Box Situation and Layout	01/01/17
CB 9B	Standard Catch Basin and Cleanout Box Section Details	01/01/17
CB 9C	Standard Catch Basin and Cleanout Box Schedule of Installation 18 to 42 Inch RCP 12 to 48 Inch CMP	01/01/17
CB 9D	Standard Catch Basin and Cleanout Box Schedule of Installation 48 to 66 Inch RCP 60 to 78 Inch CMP	01/01/17
CB 10A	Standard Catch Basin and Cleanout Box Situation and Layout	01/01/17
CB 10B	Standard Catch Basin and Cleanout Box Section Details	01/01/17
CB 10C	Standard Catch Basin and Cleanout Box Schedule of Installation 42 to 60 Inch RCP 48 to 72 Inch CMP	01/01/17
CB 11	Precast Concrete Standard Manhole	01/01/17
CB 12	Precast Concrete Drainage Box	01/01/17

Crash Cushions (CC)

CC 1	Crash Cushion and End Treatment Markers	01/01/17
CC 2	Crash Cushion Drainage Details Guideline A	01/01/17
CC 3	Crash Cushion and End Treatment Drainage Details Guideline B	01/01/17
CC 4A	Details for Placement Crash Cushions Type A, B, and D	01/01/17
CC 4B	Crash Cushion Mounted On Median Island	01/01/17
CC 4C	Crash Cushion Split Median Island w/RR Crossing	01/01/17
CC 5A	Grading and Placement Details Crash Cushion Type C C.A.T	01/01/17
CC 5B	Grading and Placement Details Crash Cushion Type C Fleat-MT	01/01/17
CC 6	Crash Cushion Type E Sand Barrel Details	01/01/17
CC 7A	Grading and Installation Details End Treatment Type F Quad Trend 350	01/01/17
CC 7B	Grading and Installation Details End Treatment Type F Beat-SSCC	01/01/17

CC 8A	Grading and Installation Details Softstop End Treatment Type G (MASH)	01/01/17
CC 8B	Grading and Installation Details MSKT-SP-MGS End Treatment Type G (MASH)	01/01/17
CC 8C	Grading and Installation Details for “3R” Projects End Treatment Type G	01/01/17
CC 9	Grading and Installation Details SRT M10 End Treatment Type H (MASH)	01/01/17

Diversion Boxes (DB)

DB 1A	Standard Diversion Box/Cover Plate/Grating for 18 Inch DIA or 24 Inch DIA Pipe	01/01/17
DB 1B	Standard Diversion Box Hinged Lid Details for 18 Inch DIA or 24 Inch DIA Pipe	01/01/17
DB 1C	Standard Diversion Box Bicycle Safe Grating Details for 18 Inch DIA or 24 Inch DIA Pipe	01/01/17
DB 1D	Standard Diversion Box Three Gate Box Sections for 18 Inch DIA or 24 Inch DIA Pipe	01/01/17
DB 1E	Standard Diversion Box Three Gate Box Sections for 18 Inch DIA or 24 Inch DIA Pipe	01/01/17
DB 1F	Standard Diversion Box Three Gate Box Sections for 18 Inch DIA or 24 Inch DIA Pipe	01/01/17
DB 1G	Solid Cover for Std Dwg DB 1	01/01/17
DB 2A	Standard Diversion Box w/Interchangeable Walls, Bottom Slab, Walls, and Apron Details	01/01/17
DB 2B	Standard Diversion Box W/Interchangeable Walls, Quantities Schedule	01/01/17
DB 2C	Standard Diversion Box w/Interchangeable Walls, Hand Slide Gate Details	01/01/17
DB 2D	Standard Diversion Box Type G Hand Slide Gate Details	01/01/17
DB 2E	Standard Diversion Box Hinged Lid (Solid Cover Plate) Type A Details Type I Plan	01/01/17
DB 2F	Standard Diversion Box Hinged Lid (Solid Cover Plate) Type A Details Type II Plan	01/01/17
DB 2G	Standard Diversion Box Hinged Lid Solid Cover Type B Details	01/01/17
DB 2H	Standard Diversion Box Hinged Lid Solid Cover Type B and C Details	01/01/17
DB 3A	Standard Diversion Box with Manhole Cover Situation and Layout	01/01/17
DB 3B	Standard Diversion Box with Manhole Cover Up to 42 Inch RCP and Up To 54 Inch CMP	01/01/17

DB 3C	Standard Diversion Box with Manhole Cover 48 Inch to 72 Inch RCP and 60 Inch to 84 Inch CMP	01/01/17
DB 4	Standard Transition Concrete Lined Ditch to Pipe or Diversion Box	01/01/17
DB 5	Standard Screw Grate and Frame	01/01/17

Design Drawings (DD)

DD 1	Superelevation, Widening, and Edge Detail	01/01/17
DD 2	Surface Ditch and Benched Slope Details	01/01/17
DD 3	Geometric Design for Freeways	01/01/17
DD 4	Entrance Ramps	01/01/17
DD 5	Exit Ramps	01/01/17
DD 6	Intersection Geometrics	01/01/17
DD 7	Freeway Crossover	01/01/17
DD 8	Structural Geometric Design Standards for Clearances	01/01/17
DD 9	Structural Geometric Design Standards	01/01/17
DD 10	Divided Arterials	01/01/17
DD 11	Arterial and Collector Roads	01/01/17
DD 12	Local, Frontage, and Access Roads	01/01/17
DD 13	Two-Lane Intersection 1 of 2	01/01/17
DD 14	Two-Lane Intersection 2 of 2	01/01/17
DD 15	Embankment for Bridge Placement	01/01/17
DD 16	Utility Location Requirements	01/01/17
DD 17	Clear Zone and Lateral Offset to Obstruction	01/01/17
DD 18	Marked Pedestrian Crosswalk Enhancement Flowchart	01/01/17

Drainage (DG)

DG 1	Maximum Fill Height for Steel Drainage Pipe	01/01/17
DG 2	Maximum Fill Height for Aluminum Drainage Pipe	01/01/17
DG 3	Maximum Fill Height for Thermoplastic and Reinforced Concrete Drainage Pipe	01/01/17
DG 4	Maximum Fill Height and Spacing for Drainage Pipe	01/01/17
DG 5	Drainage Pipe Installation	01/01/17
DG 6	Steel Safety End Sections	01/01/17
DG 7	Not Used	
DG 8	Steel End Sections	01/01/17
DG 9	Concrete End Sections	01/01/17

Environmental Controls (EN)

EN 1	Temporary Erosion Control (Check Dams)	01/01/17
EN 2	Temporary Erosion Control (Silt Fence)	01/01/17
EN 3	Temporary Erosion Control (Slope Drain and Temporary Berm)	01/01/17
EN 4	Temporary Erosion Control (Drop-Inlet Barriers)	01/01/17
EN 5	Temporary Erosion Control (Pipe-Inlet Barriers)	01/01/17

EN 6	Temporary Erosion Control (Sediment Trap and Stabilized Construction Entrance)	01/01/17
EN 7	Temporary Erosion Control (Straw Bale Barrier)	01/01/17

Fence and Gates (FG)

FG 1A	Right Of Way Fence and Gates (Wood Post)	01/01/17
FG 1B	Right Of Way Fence and Gates (Wood Post)	01/01/17
FG 2A	Right Of Way Fence and Gates (Metal Post)	01/01/17
FG 2B	Right Of Way Fence and Gates (Metal Post)	01/01/17
FG 3	Swing Gates Type I for Gates Less Than 17 FT	01/01/17
FG 4A	Standard Wildlife Escape Ramp Details	01/01/17
FG 4B	Combination Wildlife Escape Ramp Details	01/01/17
FG 4C	Corner Wildlife Escape Ramp Details	01/01/17
FG 4D	Right Of Way Pole Fence Detail	01/01/17
FG 5	Swing Gates Type II for Gates Wider Than 17 FT	01/01/17
FG 6	Chain Link Fence	01/01/17

Grates, Frames, and Trash Racks (GF)

GF 1	Manhole Cover and Frame	01/01/17
GF 2	Not Used	
GF 3	Rectangular Grate and Frame	01/01/17
GF 4	Rectangular Directional Flow Grate and Frame	01/01/17
GF 5	Rectangular Solid Cover and Frame	01/01/17
GF 6	Manhole Steps	01/01/17
GF 7	Not Used	
GF 8	2FT x 2FT Grate and Frame	01/01/17
GF 9	Not Used	
GF 10	Standard Trash Racks 90 Degree Crossing Angle	01/01/17
GF 11	Standard Trash Racks	01/01/17
GF 12	Standard Trash Racks	01/01/17
GF 13	Open Curb Inlet Grate and Frame	01/01/17
GF 14	Not Used	
GF 15	Not Used	
GF 16	Perpendicular Rectangular Grate and Frame	01/01/17

General Road Work (GW)

GW 1A	Raised Island	01/01/17
GW 1B	Raised Island and Plowable End Section	01/01/17
GW 1C	Raised Island Details	01/01/17
GW 1D	Median Reflector Details	01/01/17
GW 2A	Concrete Curb and Gutter Types	01/01/17
GW 2B	Concrete Curb and Gutter Details	01/01/17
GW 3A	Concrete Driveways and Sidewalks	01/01/17
GW 3B	Concrete Driveways and Sidewalks	01/01/17
GW 4	Right of Way Marker	01/01/17
GW 5A	Newspaper and Mailbox Stop Layout	01/01/17

GW 5B	Newspaper and Mailbox Supports	01/01/17
GW 6A	Delineation Hardware	01/01/17
GW 6B	Barrier and Flexible Delineation Hardware	01/01/17
GW 7A	Delineation Application	01/01/17
GW 7B	Linear Delineation Panel and Installation Details	01/01/17

Pedestrian Access (PA)

PA 1	Pedestrian Access	01/01/17
PA 2	Pedestrian Access	01/01/17
PA 3	Pedestrian Access	01/01/17
PA 4	Pedestrian Access	01/01/17
PA 5	Pedestrian Access	01/01/17

Paving (PV)

PV 1	Joints for Highways with Concrete Traffic Lanes and Shoulders	01/01/17
PV 2	Pavement/Approach Slab Details	01/01/17
PV 3	Concrete Pavement Details 1 of 2	01/01/17
PV 4	Concrete Pavement Details 2 of 2	01/01/17
PV 5	Urban Concrete Pavement Details	01/01/17
PV 6A	Rumble Strips Location Details	01/01/17
PV 6B	Rumble Strips Depth and Location Details	01/01/17
PV 7A	Typical Rumble Strip Shoulder Sequencing and Applications	01/01/17
PV 7B	Typical Rumble Strip Center Line Sequencing and Application	01/01/17
PV 8	Typical Rumble Strip Centerline Application	01/01/17
PV 9	Dowel Bar Retrofit	01/01/17
PV 10	Utility Orientation/Adjustment Options in PCCP	01/01/17

Railroad (RR)

RR 1	Signs at Railroad Crossings	01/01/17
RR 2	Pavement Markings at Railroad Crossings	01/01/17
RR 3A1	Active Pedestrian Controls for Railroad Crossings Sheet 1 of 2	01/01/17
RR 3A2	Active Pedestrian Controls for Railroad Crossings Sheet 2 of 2	01/01/17
RR 4A1	Passive Pedestrian Controls for Railroad Crossings Sheet 1 of 2	01/01/17
RR 4A2	Passive Pedestrian Controls for Railroad Crossings Sheet 2 of 2	01/01/17
RR 5A1	Pedestrian Controls Semi-Exclusive Railroad Alignments Sheet 1 of 2	01/01/17

RR 5A2	Pedestrian Controls Semi-Exclusive Railroad Alignments Sheet 2 of 2	01/01/17
RR 6	Pedestrian Controls Street Running Railroad Alignment Signalized Intersections	01/01/17
RR 7	Pedestrian Controls Street Running Railroad Alignment Unsignalized Intersections	01/01/17
RR 8	Raised Island Placement at Railroad Crossings	01/01/17
RR 9	Signing and Striping at Inactive Railroad Crossings	01/01/17

Signals (SL)

SL 1A	Traffic Signal Mast Arm Pole and Luminaire Extension 30 ft through 55 ft	01/01/17
SL 1B	Traffic Signal Mast Arm Pole and Luminaire Extension 60 ft through 75 ft	01/01/17
SL 1C	Traffic Signal Mast Arm Pole and Luminaire Extension 80 ft through 85 ft	01/01/17
SL 1D	Traffic Signal Dual Mast Arm Pole	01/01/17
SL 1E	Traffic Signal Pole	01/01/17
SL 2A	Traffic Signal Mast Arm Pole Foundation 25 FT through 75 FT	01/01/17
SL 2B	Traffic Signal Mast Arm Pole Foundation 80 FT and 85 FT	01/01/17
SL 3A	Traffic Signal Heads	01/01/17
SL 3B	Traffic Signal Mounting	01/01/17
SL 3C	Traffic Signal Mounting	01/01/17
SL 3D	Mast Arm Sign Mounting	01/01/17
SL 3E	Traffic Signal Head Wiring	01/01/17
SL 4A	Traffic Signal Cabinet Base and Pole Mounted Cabinet	01/01/17
SL 4B	Traffic Signal Cabinet Base Expansion	01/01/17
SL 4C	Underground Service Pedestals	01/01/17
SL 4D	Traffic Signal Junction Box and Conduit	01/01/17
SL 4E	Single Transformer Substation	01/01/17
SL 5A	Highway Luminaire Arm and Vertical Extension	01/01/17
SL 5B	Highway Luminaire Ground Mounted Pole	01/01/17
SL 5C	Highway Luminaire Slip Base Details	01/01/17
SL 5D	Highway Luminaire Pole Foundation Extension	01/01/17
SL 6A	Pedestrian Signal Assembly	01/01/17
SL 6B	Pedestrian Signal Crosswalk	01/01/17
SL 6C	Pedestrian Hybrid Beacon Crosswalk (HAWK)	01/01/17
SL 6D	Overhead Flashing Beacon at an Intersection Crosswalk	01/01/17
SL 6E	Post-Mounted Flashing Beacon at an Intersection Crosswalk	01/01/17
SL 6F	Overhead Flashing Beacon at a Midblock Crosswalk	01/01/17
SL 6G	Post-Mounted Flashing Beacon at a Midblock Crosswalk	01/01/17
SL 7A	Overhead School Speed Limit Assembly	01/01/17
SL 7B	Post-Mounted School Speed Limit Assembly	01/01/17
SL 7C	School Speed Limit Signing	01/01/17
SL 8	Advance Warning Signal (AWS) System	01/01/17

Signs (SN)

SN 1	Sign Drawing Series General Notes	01/01/17
SN 2A	Placement of Ground Mount Signs	01/01/17
SN 2B	Placement of Ground Mount and Barrier Mount Signs	01/01/17
SN 2C	Wrong Way Signing, Delineation, and Markings for Off-Ramps and Divided Highways	01/01/17
SN 3	Speed Reduction Sign Sequence	01/01/17
SN 4	Typical Installation for Milepost Signs	01/01/17
SN 5	Freeway Crossover Signing	01/01/17
SN 6	Object Markers “T” Intersection and Pavement Transition Guidance	01/01/17
SN 7	Chevron Alignment Signs	01/01/17
SN 8	Mounting Bar Placement for Small Signs	01/01/17
SN 9A	Tubular Steel Sign Mounting Requirements	01/01/17
SN 9B	Tubular Steel Sign Mounting Hardware	01/01/17
SN 10	Banding Mounting Brackets and Clamps	01/01/17
SN 11A	Small Sign Tubular Steel Post Base with Concrete (B1) (Socket System)	01/01/17
SN 11B	Small Sign Tubular Steel Post Base (B2A) (Triangular Steel Anchor System)	01/01/17
SN 11C	Small Sign Tubular Steel Post Base with Concrete (B2B) (Triangular Steel Anchor System in Concrete)	01/01/17
SN 12A	Slipbase Sign Base Installation	01/01/17
SN 12B	Round Post Slipbase Sign Base (B3) Hardware	01/01/17
SN 12C	Square Post Slipbase Sign Base (B7D) Hardware	01/01/17
SN 12D	Surface Mounted Tubular Steel Sign Base (B4A)	01/01/17
SN 13	Side Mounted Tubular Steel Sign Base (B4B)	01/01/17
SN 14A	Barrier Mounted Tubular Steel Sign Bases 20 SQ FT or Less	01/01/17
SN 14B	Barrier Mounted Tubular Steel Sign Bases (B5A and B5B)	01/01/17
SN 15A	Ground Mount Sign Frame Fabrication Details	01/01/17
SN 15B1	Freeway Sign General Requirements	01/01/17
SN 15B2	Freeway Sign Post and Foundation Requirements	01/01/17
SN 15C	Freeway Sign Base Post Requirements (B6A, B6B, and B6C)	01/01/17
SN 15D	Freeway Sign Bracket Details	01/01/17
SN 15E	Freeway Sign Fuse Plate Requirements	01/01/17
SN 15F	Freeway Sign Foundation Requirements	01/01/17
SN 16A	Multi-Directional Breakaway Base for Steel I-Beam Supports, General Requirements	01/01/17
SN 16B	Multi-Directional Breakaway Base for Steel I-Beam Sign Supports, Two Posts	01/01/17
SN 16C	Multi-Directional Breakaway Base for Steel I-Beam Sign Supports, Three and Four Posts	01/01/17
SN 16D	Multi-Directional Breakaway Base for Steel I-Beam Sign Supports, Foundation Details	01/01/17
SN 16E	Multi-Directional Breakaway Base for Sign Posts, (B7A)	01/01/17

SN 16F	Multi-Directional Breakaway Base for Sign Posts, (B7B)	01/01/17
SN 16G	Multi-Directional Breakaway Base for Sign Posts, (B7C)	01/01/17
SN 17A	Multi-Directional Breakaway Base for Round and Square Post, (B7D)	01/01/17
SN 17B	Multi-Directional Breakaway Base for Round Pipe Double Post (B7D)	01/01/17
SN 17C	Multi-Directional Breakaway Coupling System for Square Tube Sign Supports Single Post	01/01/17
SN 17D	Multi-Directional Breakaway Coupling System for Square Tube Sign Supports Double Post	01/01/17
SN 18	Ground Mounted Timber Sign Post	01/01/17

Striping (ST)

ST 1	Typical Pavement Markings No Pass Zone and Lane Reduction	01/01/17
ST 2	Passing Lane Detail	01/01/17
ST 3A	Freeway Climbing Lane Inside Widening Detail	01/01/17
ST 3B	Freeway Climbing Lane Outside Widening Detail	01/01/17
ST 4	Entrance Ramp Pavement Markings	01/01/17
ST 5	Exit Ramp Pavement Markings	01/01/17
ST 6	Intersection Pavement Markings	01/01/17
ST 7	Crosswalks, Parking, and Intersection Approaches	01/01/17
ST 8	School Crossing and School Message	01/01/17
ST 9	Contrast Pavement Markings for Concrete Pavement	01/01/17
ST 10	Bicycle Lane Pavement Markings (Sheet 1 of 2)	01/01/17
ST 11	Bicycle Lane Pavement Markings (Sheet 2 of 2)	01/01/17
ST 12	Location of Bicycle Detector Pavement Messages at Intersection	01/01/17
ST 13	Two-Lane Intersection Pavement Markings (Sheet 1 of 2)	01/01/17
ST 14	Two-Lane Intersection Pavement Markings (Sheet 2 of 2)	01/01/17
ST 15	Preferential Lane Signing and Pavement Marking Details	01/01/17
ST 16	Preferential Lane Access Opening Details	01/01/17
ST 17	Preferential Lane Median Signing Spacing Greater 1 Mile	01/01/17
ST 18	Preferential Lane Median Signing Spacing Equal To Or Less Than 1 Mile	01/01/17

Structures and Walls (SW)

SW 1A	Welded End Guard Unit	01/01/17
SW 1B	8’-0” Precast Concrete Cattle Guard	01/01/17
SW 1C	6’-0” Precast Concrete Cattle Guard	01/01/17
SW 2	Noise Wall Placement Options	01/01/17
SW 3A	Precast Concrete Noise Wall 1 of 2	01/01/17
SW 3B	Precast Concrete Noise Wall 2 of 2	01/01/17
SW 4A	Precast Concrete Retaining/Noise Wall 1 of 3	01/01/17
SW 4B	Precast Concrete Retaining/Noise Wall 2 of 3	01/01/17
SW 4C	Precast Concrete Retaining/Noise Wall 3 of 3	01/01/17

SW 5	Precast Pilaster Post	01/01/17
SW 6	Precast Concrete Panel Surface Texture Options	01/01/17

Traffic Control (TC)

TC 1	Traffic Control Drawing Series General Notes	01/01/17
TC 2A	Work Zone Channelization Devices	01/01/17
TC 2B	Work Zone Signing	01/01/17
TC 2C	Work Zone Advanced Warning Arrow Boards	01/01/17
TC 2D	Delineator Mounted Work Zone Sign Bracket	01/01/17
TC 3A	Hazard Mitigation	01/01/17
TC 3B	Hazard Mitigation and Positive Protection Devices	01/01/17
TC 4A	Standard Work Zone Signing General	01/01/17
TC 4B1	Reduced Speed Work Zone Signing General	01/01/17
TC 4B2	Temporary Portable Rumble Strips Freeway	01/01/17
TC 4B3	Reduced Speed Shoulder Work Zone Signing General	01/01/17
TC 4B4	Shoulder Work Zone Temporary Portable Rumble Strips Freeway/Divided Highway	01/01/17
TC 4C	Project Limit Signing	01/01/17
TC 4D1	Work Zone Specialty Signs	01/01/17
TC 4D2	Work Zone Specialty Signs	01/01/17
TC 5	Traffic Control Urban Intersection with Roadways Under 50 MPH	01/01/17
TC 6	Temporary Pedestrian Access Route	01/01/17
TC 7	Median Crossover and 2-Lane, 2-Way Diversion	01/01/17
TC 8	Traffic Control Lane Closure	01/01/17
TC 9	Work Zone Business Access Signing	01/01/17
TC 10	Traffic Control Expressway and Freeway Crossover/Turn Around	01/01/17
TC 11	Traffic Control Exit Ramp GORE	01/01/17
TC 12	Traffic Control Entrance Ramp GORE	01/01/17
TC 13	Traffic Control Shoulder Haul Road	01/01/17
TC 14A	Traffic Control Flagging Operation	01/01/17
TC 14B	Reducing Speed Signing for Pilot Car Operation (Conventional Roads)	01/01/17
TC 15	Traffic Control 2 Lane/2 Way Seal Coat with Cover Material	01/01/17
TC 16	Traffic Control for Non-Durable Pavement Marking	01/01/17
TC 17	Traffic Control Work Zone Guardrail Intermediate End Protection	01/01/17
TC 18	Blunt End Protection for W-Beam Guardrail and Concrete Barrier	01/01/17
TC 19	Construction Access Points for Speeds of 55 MPH and Greater	01/01/17

ATMS LINE STYLE LEGEND

FUTURE OR EXISTING	REQ'D	TYPE	CONDUCTOR TYPES
----#d ----	—— #D ——	4-CONDUIT DUCT BANK (# INDICATES NUMBER OF 4-CONDUIT DUCT BANKS 1, 2, OR 4)	FIBER OPTIC
----hv#----	——HV#——	HIGH VOLTAGE CONDUIT (# INDICATES SIZE IN INCHES - 1 1/2, 2, 3, OR 4)	120, 240, OR 480VAC
----lv# ----	——LV#——	LOW VOLTAGE CONDUIT (# INDICATES SIZE IN INCHES - 1 1/2, 2, 3, OR 4)	COPPER COMM OR POWER LESS THAN 120VAC
--- tal# ---	— TAL# —	TAIL CIRCUIT COMMUNICATIONS CONDUIT (# INDICATES SIZE IN INCHES - 1 1/2, 2, 3, OR 4)	FIBER OPTIC OR COPPER COMM
--- spr# ---	— SPR# —	SPARE CONDUIT (# INDICATES SIZE IN INCHES - 1 1/2, 2, 3, OR 4)	EMPTY
----xc -----		EXISTING CONDUIT	UNKNOWN OR AS SPECIFIED
--- ohp ----	——OHP——	OVERHEAD POWER	N/A
--- ohc ----	——OHC——	OVERHEAD COMMUNICATIONS	N/A
--- ohx ----		EXISTING OVERHEAD CONDUCTORS	UNKNOWN OR AS SPECIFIED
--- md#----	——MD#——	BUNDLED MICRODUCT (# INDICATED NUMBER OF INDIVIDUAL MICRODUCTS CONTAINED WITHIN OVER SHEATH; 2,3,4, OR 7)	MICRODUCT

ABBREVIATIONS

ABBREVIATION	DEFINITION
ATMS	ADVANCED TRAFFIC MANAGEMENT SYSTEM
AWG	AMERICAN WIRE GAUGE
BNC	BAYONET NEIL-CONCELMAN
CAB	CABINET
CAT-#	CATEGORY - (# INDICATES CATEGORY NUMBER) CONDUCTOR
CCTV	CLOSED CIRCUIT TELEVISION
COMM	COMMUNICATIONS
DLC	DETECTOR LOOP LEAD-IN CABLES
DIA	DIAMETER
FRE	FIBERGLASS REINFORCED EPOXY
GND	GROUND CONDUCTOR
GRC	GALVANIZED RIGID CONDUIT
HAR	HIGHWAY ADVISORY RADIO
HDPE	HIGH DENSITY POLYETHYLENE
HFC	HYBRID FIBER CABLE
HMA	HOT MIX ASPHALT
LAN	LOCAL AREA NETWORK
NID	NON-INTRUSIVE DETECTOR
NTS	NOT TO SCALE
OC	OFF CENTER
PC	POLYMER CONCRETE
PCCP	PORTLAND CEMENT CONCRETE PAVEMENT
PTCC	PAN-TILT CONTROL CABLE
PTZ	PAN/TILT/ZOOM
PWR	POWER
RDPE	REMOTE DATA PORT ENCLOSURE
REQ'D	REQUIRED
RMS	RAMP METER STATION
ROW	RIGHT-OF-WAY
RPU	REMOTE PROCESSING UNIT (FOR RWIS)
RWIS	ROADWAY WEATHER INFORMATION SYSTEM
## SMF	SINGLE MODE FIBER (## INDICATES NUMBER OF STRANDS)
TMS	TRAFFIC MONITORING STATION
TOC	TRAFFIC OPERATIONS CENTER
TSC	TRAFFIC SIGNAL CONTROLLER
TYP	TYPICAL
VAC	VOLTS (ALTERNATING CURRENT)
VID	VIDEO
VMS	VARIABLE MESSAGE SIGN
WIM	WEIGHT-IN-MOTION
WP	WORKING POINT

DETAIL CALLOUT LEGEND

CALLOUT	MEANING
"X" / "Y"	SEE DETAIL "X" ON SHEET "Y"

CONDUCTOR LEGEND

CALLOUT	DEFINITION
X-Y(Z)	X=QUANTITY Y=WIRE SIZE (AWG) Z=PURPOSE

EQUIPMENT LEGEND

FUTURE OR EXISTING	REQ'D	EQUIPMENT TYPE
		TYPE I FREEWAY VARIABLE MESSAGE SIGN (VMS) ASSEMBLY
		ROADWAY WEATHER INFORMATION SYSTEM
		OMNI DIRECTIONAL ANTENNA
		YAGI DIRECTIONAL ANTENNA
		CCTV CAMERA/PTZ/POLE AND FOUNDATION
d	D	VIDEO DETECTION
d	D	NON-INTRUSIVE DETECTOR (RADAR)
		WIRELESS IN-PAVEMENT MAGNETOMETER
		WIRELESS DETECTION ACCESS POINT
		WIRELESS DETECTION REPEATER
		DETECTOR LOOP
I-pc	I-PC	TYPE I- POLYMER CONCRETE JUNCTION BOX
II-pc	II-PC	TYPE II- POLYMER CONCRETE JUNCTION BOX
III-pc	III-PC	TYPE III- POLYMER CONCRETE JUNCTION BOX
V	V	COMMUNICATIONS VAULT
		COMMUNICATIONS HUB
		ATMS CABINET
		SIGNAL CABINET
		ADVANCED FLASHING BEACON SIGN ON POLE
		MAST ARM WITH SIGNAL HEADS
		SIGNAL HEAD
		POLE
		POWER POLE
M	M	POLE MOUNTED METER
ps	PS	POWER SERVICE POINT
		UNDERGROUND SERVICE PEDESTAL
X-Z	X-Z	POLE MOUNTED TRANSFORMER
		PAD MOUNTED TRANSFORMER
		PAD MOUNTED TRANSFORMER WITH DISCONNECT

ELECTRICAL SCHEMATIC LEGEND

FUTURE OR EXISTING	SYMBOL	EQUIPMENT
		BREAKER
M	M	METER
N	N	NEUTRAL LUG
EG	EG	EQUIPMENT GROUND LUG
		GROUND ROD
		TRANSFORMER
		BLADE SWITCH
		FUSE

NO.	DATE	APPR.	REMARKS

UTAH DEPARTMENT OF TRANSPORTATION
STANDARD DRAWINGS FOR ROAD AND BRIDGE CONSTRUCTION
SALT LAKE CITY, UTAH

RECOMMENDED FOR APPROVAL — JAN. 01, 2017 DATE
CHAIRMAN STANDARDS COMMITTEE APPROVED — JAN. 01, 2017 DATE
DEPUTY DIRECTOR

STANDARD DRAWING TITLE
LEGEND SHEET

STD. DWG. NO.
AT 1

DGN File:L:\Standard_Drawings\Imperial\2017 Approved\1-All Drawings\AT01.dgn
28-NOV-2016

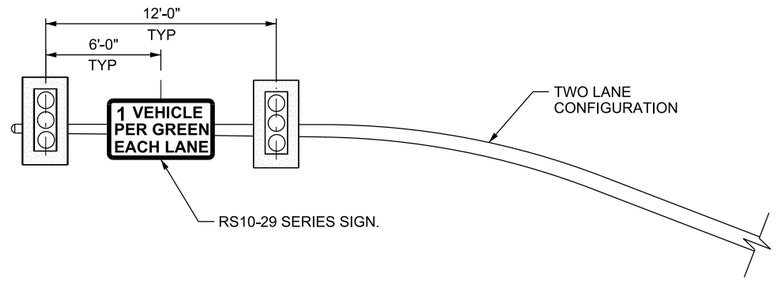

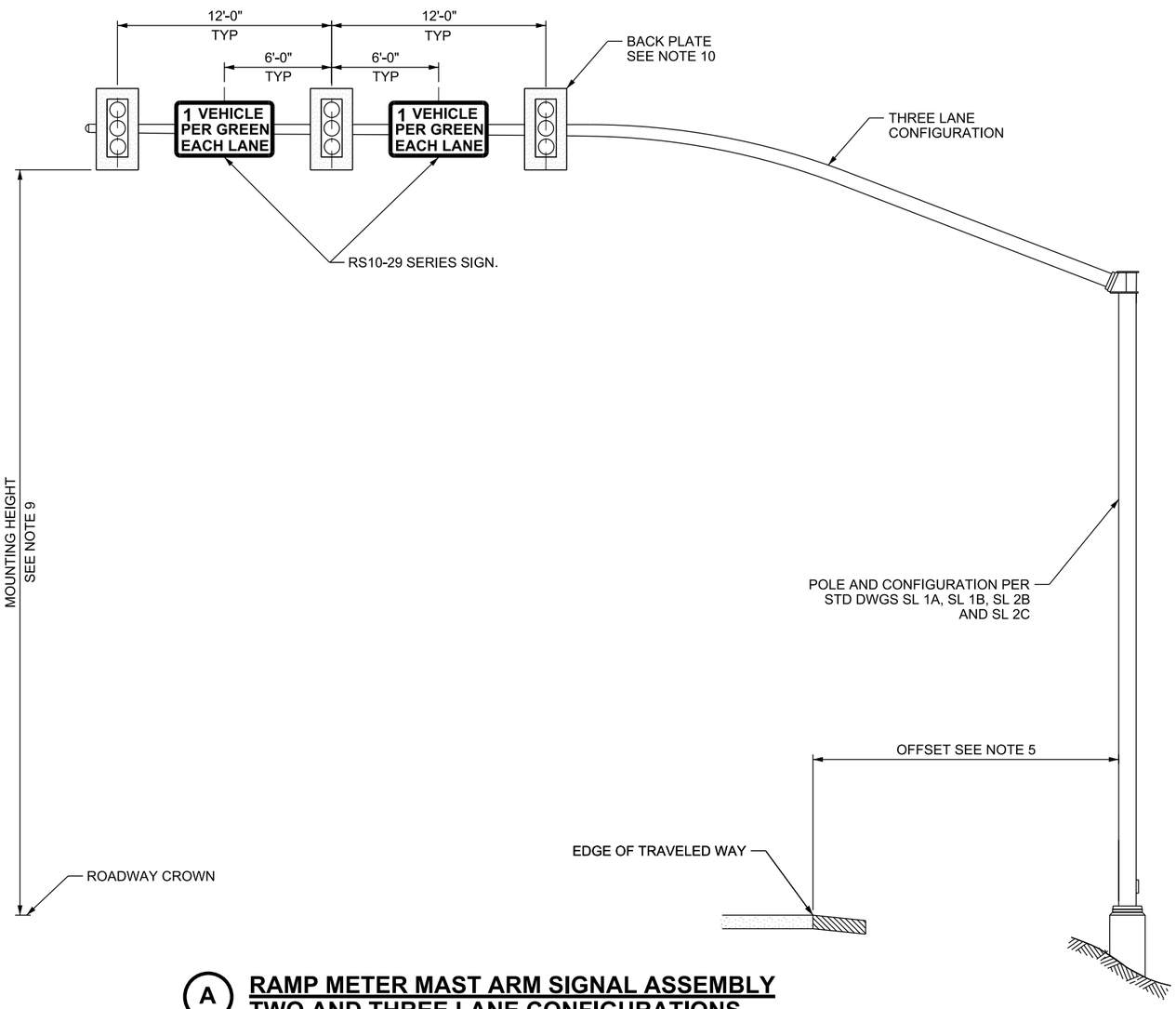

(A) RAMP METER MAST ARM SIGNAL ASSEMBLY TWO AND THREE LANE CONFIGURATIONS

NOTES:

1. SIGNAL POLE, MAST ARM AND LUMINAIRE EXTENSION ARE STATE FURNISHED ITEMS.
2. ALIGN ALL SIGNAL HEADS WITH CENTER OF LANES.
3. SEE STD DWG SL 2A FOR MAST ARM SIGNAL HEAD MOUNTING.
4. USE THE AASHTO A POLICY ON GEOMETRIC DESIGN OF HIGHWAYS AND STREETS FOR DESIGN OF ROADWAY ELEMENTS.
5. PLACE RAMP METER MAST ARM ASSEMBLY A MINIMUM OF 1.2 TIMES THE AASHTO CLEAR ZONE DISTANCE AWAY FROM THE TRAVELED WAY, OR SHIELD AS PER THE AASHTO ROADSIDE DESIGN GUIDE.
6. USE SEPARATE SEVEN CONDUCTOR CABLE FOR EACH SIGNAL HEAD. SEE STD DWG SL 2D.
7. USE TYPE I SIGNAL HEAD (12 INCH) WITH BACK PLATE ON RAMP METER MAST ARM. SEE STD DWG SL 6. ALL BACK PLATES TO BE SOLID BLACK, RETROREFLECTIVE TAPE WILL NOT BE ALLOWED.
8. VERIFY THE RS 10 - 29 SERIES SIGN WITH TRAFFIC MANAGEMENT DIVISION.
9. CLEARANCE FROM CROWN APPLIES TO ALL SIGNAL HEADS ON MAST ARM, REFER TO STANDARD SPECIFICATION 02892.
10. DO NOT PLACE RETRO REFLECTIVE TAPE ON FLASHING BECON BACK PLATES.

NO.	DATE	APPR.	REMARKS

UTAH DEPARTMENT OF TRANSPORTATION
STANDARD DRAWINGS FOR ROAD AND BRIDGE CONSTRUCTION
SALT LAKE CITY, UTAH

RECOMMENDED FOR APPROVAL — JAN. 01, 2017 DATE
CHAIRMAN STANDARDS COMMITTEE APPROVED — JAN. 01, 2017 DATE
DEPUTY DIRECTOR

RAMP METER
SIGNAL HEAD DETAILS
STANDARD DRAWING TITLE

STD. DWG. NO.
AT 2

DGN File:L:\Standard_Drawings\Imperial\2017 Approved\1-All Drawings\AT02.dgn
28-NOV-2016

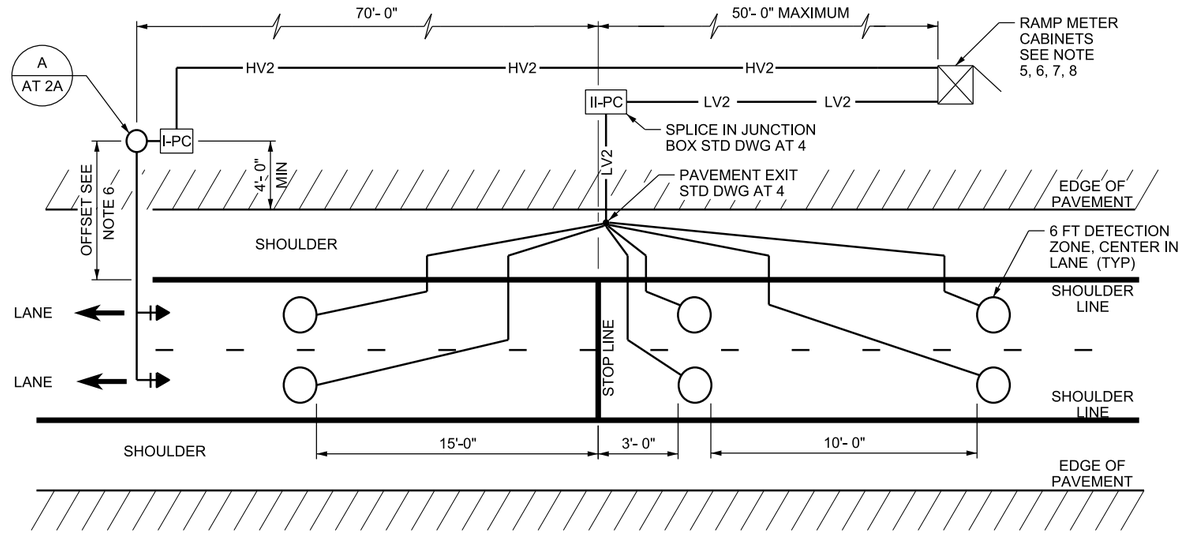

(A) TWO LANE RAMP METER DETECTION ZONE LAYOUT DETAIL

(NOT TO SCALE)

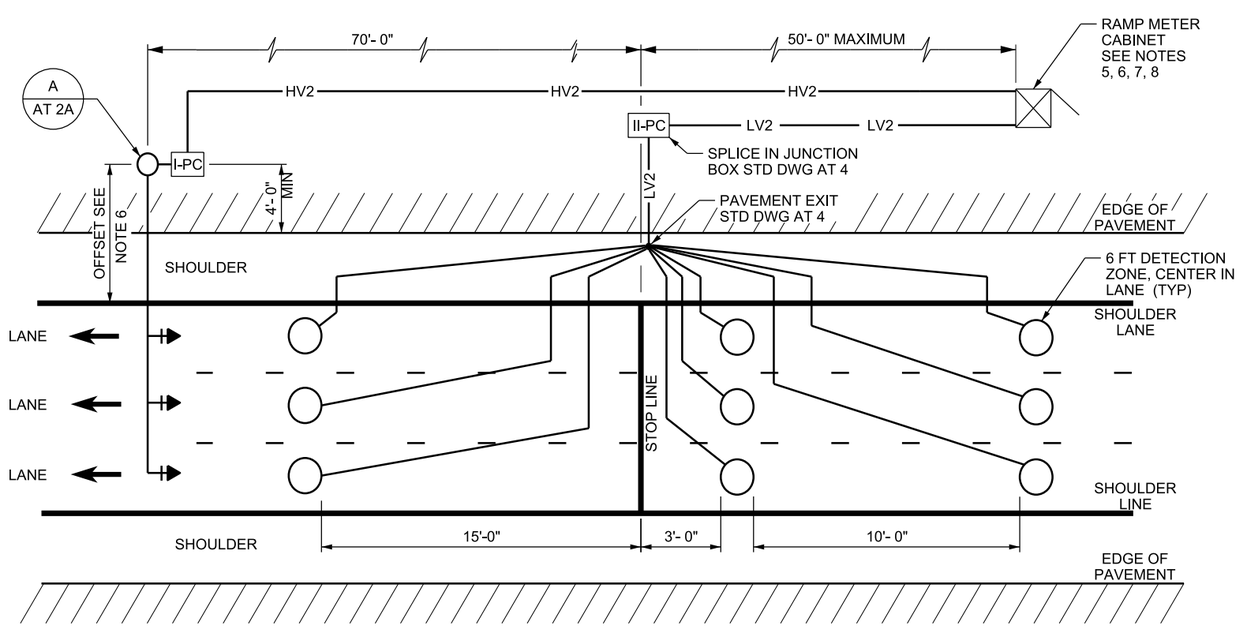

(B) THREE LANE RAMP METER DETECTION ZONE LAYOUT DETAIL

(NOT TO SCALE)

NOTES:

1. PLACE JUNCTION BOXES ACCORDING TO STD DWG AT 7A. REFER TO STD DWG AT 4 FOR DETECTION.
2. USE PREFORMED LOOPS UNDER NEW PAVEMENT. PREFORMED LOOPS ARE TO BE PLACED PRIOR TO PAVING. SAW CUTTING NEW PAVEMENT WILL NOT BE PERMITTED.
3. TAG EACH LOOP WIRE IN EACH JUNCTION BOX, BEGINNING WITH FIRST LOOP IN LANE CLOSEST TO LEFT SHOULDER.
4. SEE STD DWG AT 5 FOR DETECTOR NUMBERING SCHEME.
5. USE THE AASHTO ROADSIDE DESIGN GUIDE AND STD DWG DD 18 FOR CLEAR ZONE REQUIREMENTS. CLEAR ZONE MAY EXTEND INTO CUT OR FILL SLOPES.
6. PLACE RAMP METER MAST ARM ASSEMBLY AND CABINET A MINIMUM OF 1.2 TIMES THE AASHTO CLEAR ZONE DISTANCE AWAY FROM THE TRAVELED WAY, OR SHIELD ACCORDING TO THE AASHTO ROADSIDE DESIGN GUIDE.
7. PLACE CABINET ON RIGHT SIDE OF TRAFFIC UNLESS SPACE IS UNAVAILABLE. CABINET ON LEFT SIDE MUST MEET CLEAR ZONE REQUIREMENTS FOR MAINLINE AND RAMP.
8. ORIENT CABINET SO THAT ELECTRONICS AND SIGNAL HEAD CAN BE VIEWED AT THE SAME TIME.
9. BARRIER BREAK FOR CABINET ACCESS REQUIRED, CONSTRUCT ACCORDING TO THE PLAN.
10. ENFORCEMENT PULL OUT REQUIRED, CONSTRUCT ACCORDING TO THE PLAN.
11. SEE PLAN SHEETS FOR DETECTOR LOOP LOCATION. ADJUST THE LOOP PLACEMENT FORWARD OR BACKWARD IN THE SHORTEST DIRECTION FROM THE OPTIMUM POSITION IF A DETECTOR LOOP LOCATION IS IN CONFLICT WITH A MANHOLE, WATER VALVE, OR PAVEMENT EXPANSION JOINT.

NO.	DATE	APPR.	REMARKS

UTAH DEPARTMENT OF TRANSPORTATION
STANDARD DRAWINGS FOR ROAD AND BRIDGE CONSTRUCTION
SALT LAKE CITY, UTAH

RECOMMENDED FOR APPROVAL — JAN. 01, 2017 DATE
CHAIRMAN STANDARDS COMMITTEE APPROVED — JAN. 01, 2017 DATE
DEPUTY DIRECTOR

RAMP METER DETECTION LAYOUT AND CABINET PLACEMENT
STANDARD DRAWING TITLE

STD. DWG. NO.
AT 3

DGN File: L:\Standard_Drawings\Imperial\2017 Approved\1-All Drawings\AT03.dgn
28-NOV-2016

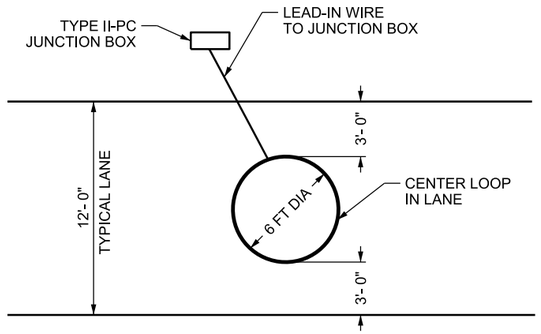

TYPICAL LOOP DETAIL

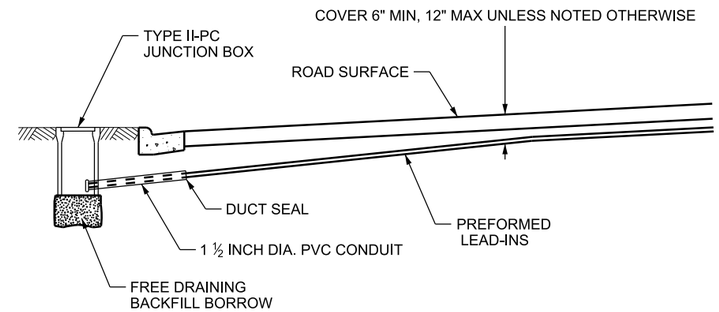

TYPICAL SECTION

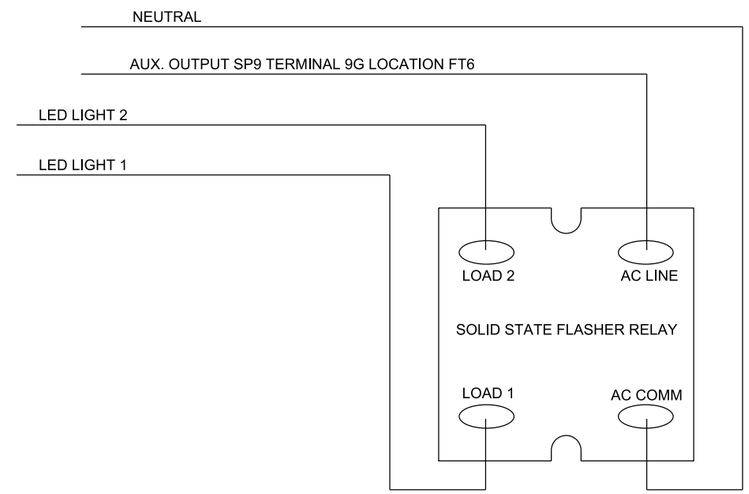

FLASHER RELAY WIRING DETAIL

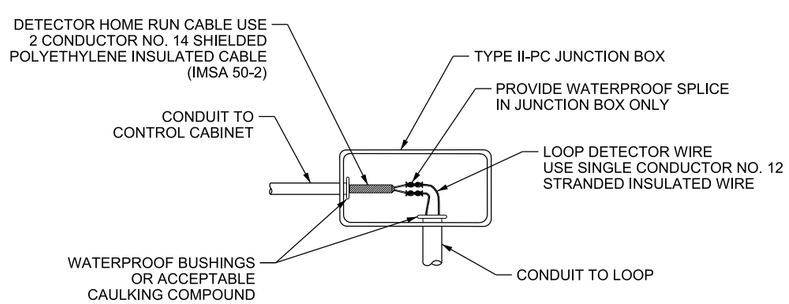

LEAD-IN/HOME RUN SPLICE DETAIL

NOTES:

1. USE SCHEDULE 40 PVC CONDUIT OR HDPE CONDUIT ONLY. REFER TO STANDARD SPECIFICATION 13553.
2. USE A SEPARATE WIRE FOR EACH LOOP. EACH LOOP WIRE TO BE CONTINUOUS, WITH NO SPLICES, EXCEPT WITH THE HOMERUN WIRE AT THE JUNCTION BOX. USE SEPARATE CONDUCTOR HOMERUN FOR EACH DETECTOR NUMBER ASSIGNMENT. REFER TO STD DWG AT 5.
3. INSPECT AND TEST ALL LOOPS. REFER TO STANDARD SPECIFICATION 13591.

NO.	DATE	APPR.	REMARKS

UTAH DEPARTMENT OF TRANSPORTATION
STANDARD DRAWINGS FOR ROAD AND BRIDGE CONSTRUCTION
SALT LAKE CITY, UTAH

RECOMMENDED FOR APPROVAL — JAN. 01, 2017 DATE
CHAIRMAN STANDARDS COMMITTEE APPROVED — JAN. 01, 2017 DATE
DEPUTY DIRECTOR

STANDARD DRAWING TITLE
LOOP DETECTOR
AND WIRING DETAILS

STD. DWG. NO.
AT 4

DGN File: L:\Standard_Drawings\Imperial\2017 Approved\1-All Drawings\AT04.dgn
28-NOV-2016

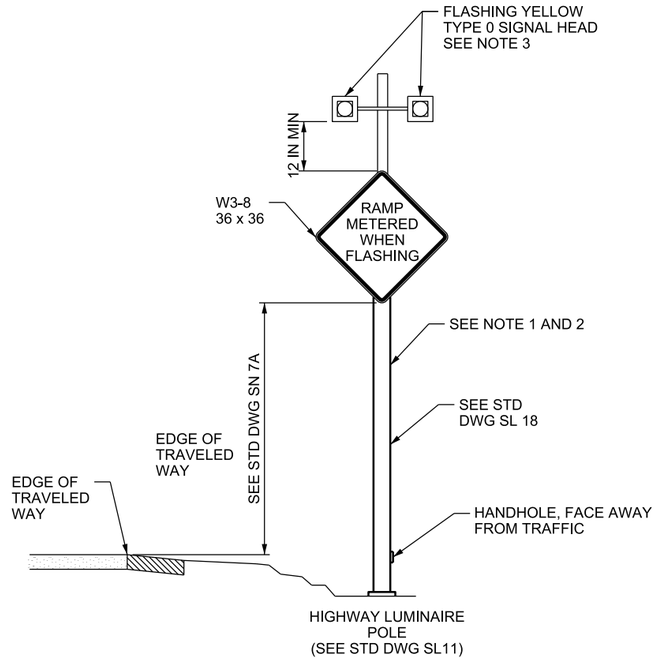

(A) RAMP METER ADVANCE WARNING SIGN

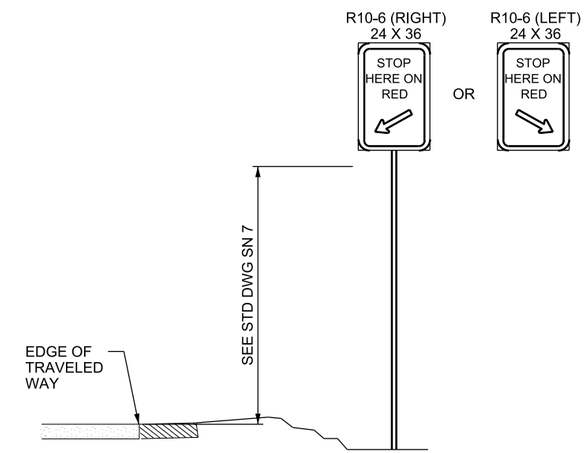

(B) STOP HERE ON RED SIGN

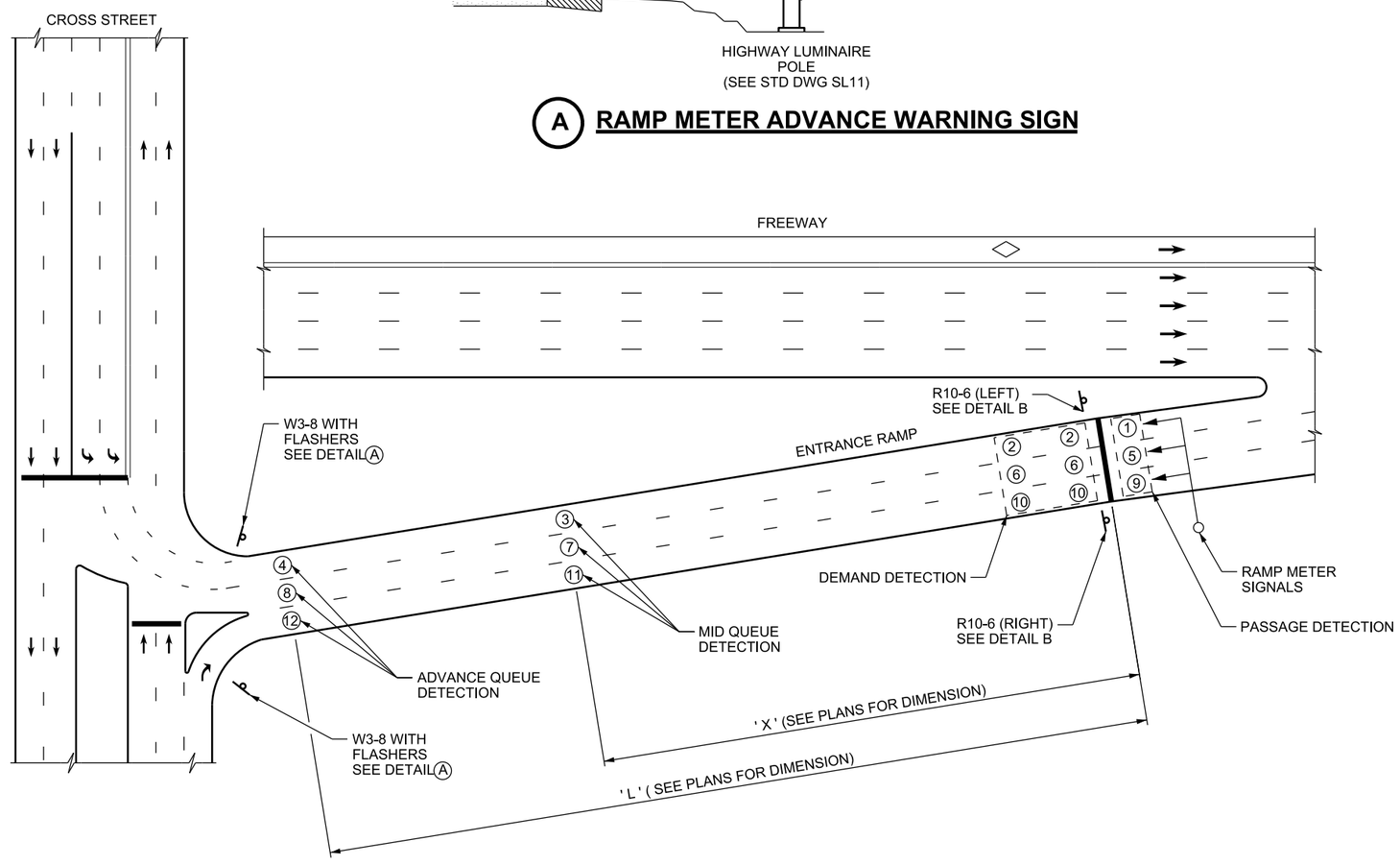

NOTES:

1. PLACE POLE ON BREAKAWAY BASE. LOCATE ACCORDING TO SN 7 SERIES STD DWGS.
2. INSTALL AT LOCATION SHOWN ON PLANS REGARDLESS OF NUMBER OF LANES.
3. 12 INCH YELLOW LED. SEE STD DWG SL 2A FOR SIGNAL HEAD DETAIL AND MOUNTING. SEE STD DWG AT 4 FOR FLASHER WIRING DETAILS.
4. USE A SEPARATE CONDUCTOR HOME RUN FOR EACH DETECTOR NUMBER ASSIGNMENT.
5. PROVIDE DETECTION LAYOUT MAP IN RAMP METER CABINET.

LEGEND

(#) CABINET DETECTOR NUMBER ASSIGNMENT.

NO.	DATE	APPR.	REMARKS

UTAH DEPARTMENT OF TRANSPORTATION
STANDARD DRAWINGS FOR ROAD AND BRIDGE CONSTRUCTION
SALT LAKE CITY, UTAH

RECOMMENDED FOR APPROVAL — JAN. 01, 2017 DATE
CHAIRMAN STANDARDS COMMITTEE APPROVED — JAN. 01, 2017 DATE
DEPUTY DIRECTOR

RAMP METER DETAILS
SIGNING AND DETECTION
STANDARD DRAWING TITLE

STD. DWG. NO.
AT 5

DGN File:L:\Standard Drawings\Imperial\2017 Approved\1-All Drawings\AT05.dgn
28-NOV-2016

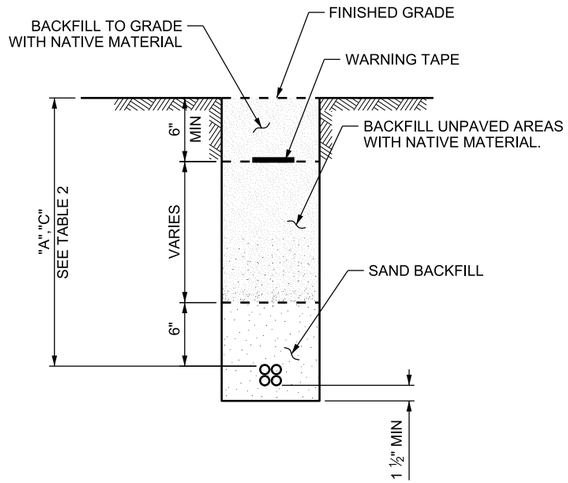

(A) 1-D MULTIDUCT CONDUIT

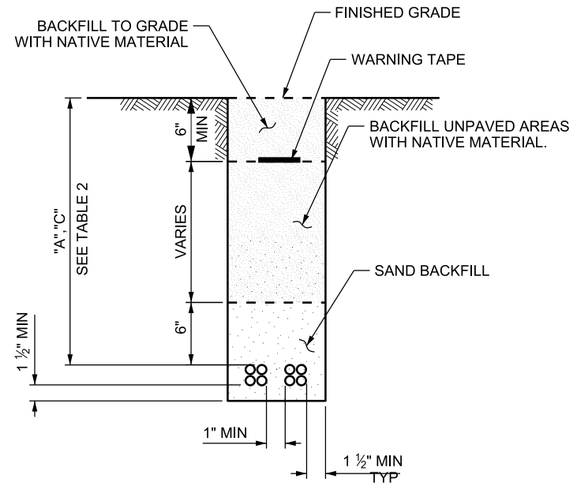

(B) 2-D MULTIDUCT CONDUIT

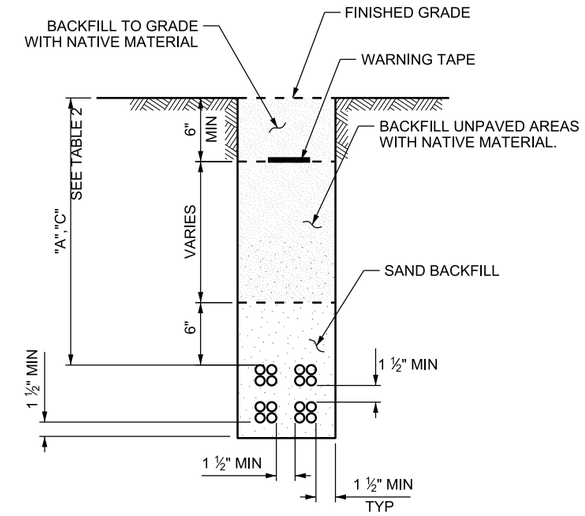

(C) 4-D MULTIDUCT CONDUIT

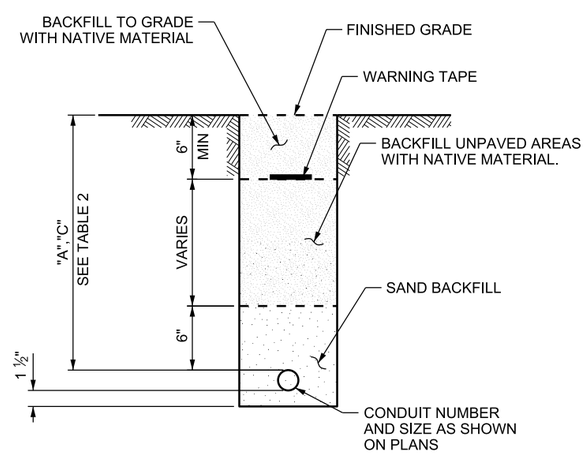

(D) NON-MULTIDUCT CONDUIT AND BUNDLED MICRODUCT

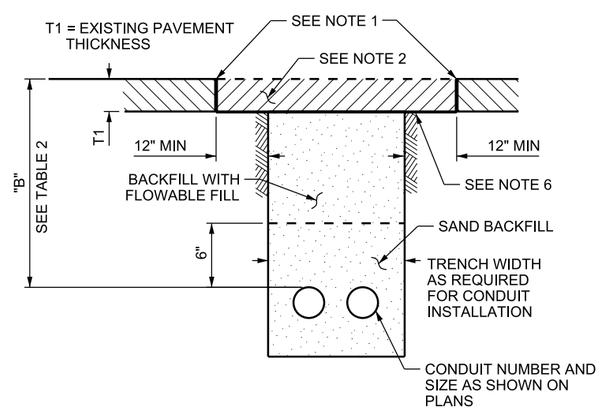

(E) CONDUIT TRENCHED IN ASPHALT PAVEMENT RESTORED WITH T PATCH

TABLE 1. T PATCH RESTORATION

EXISTING ASPHALT PAVEMENT THICKNESS (T1) IN INCHES	RESTORATION T PATCH THICKNESS IN INCHES
0 - 3 ½"	3 ½"
3 ½" - 7"	MATCH EXISTING DEPTH
7" OR GREATER	7"

TABLE 2. MINIMUM CONDUIT DEPTH

	DEPTH IN INCHES	AREA
A	36	OUTSIDE 20 FT OF PAVEMENT EDGE
B	48	HIGHWAY RIGHT-OF-WAY UNDER ASPHALT PAVEMENT SURFACE
C	60	WITHIN 20 FT OF PAVEMENT EDGE

NOTES:

1. SAW CUT PAVEMENT EDGES. APPLY A HOT-POUR RUBBERIZED ASPHALT JOINT SEALANT OR APPROVED EQUAL, APPLIED AFTER PATCH IS INSTALLED.
2. USE HMA MATERIAL FOR T-PATCH. USE OPEN-GRADED SURFACE COURSE FOR THE TOP 1 INCH OF HMA FOR PATCHES GREATER THAN 12 FT WIDE. WHERE OPEN-GRADED SURFACE COURSE EXISTS, MATCH EXISTING PAVEMENT AND CROSS-SECTION.
3. USE SAND BACKFILL AND FLOWABLE FILL WITHIN EXISTING ROADWAY, PROPOSED ROADWAY, AND SIDEWALK PAVEMENT AREAS ONLY.
4. INSTALL DETECTABLE PULL TAPE IN ALL EMPTY CONDUITS.
5. EVENLY APPLY TACK COAT ON FINAL BACKFILL BEFORE INSTALLING T-PATCH.
6. USE ⅜ INCH MINUS WELL-GRADED SAND.

NO.	DATE	APPR.	REMARKS

UTAH DEPARTMENT OF TRANSPORTATION
STANDARD DRAWINGS FOR ROAD AND BRIDGE CONSTRUCTION
SALT LAKE CITY, UTAH

RECOMMENDED FOR APPROVAL — JAN. 10, 2017 DATE
CHAIRMAN STANDARDS COMMITTEE APPROVED — JAN. 10, 2017 DATE
DEPUTY DIRECTOR

STANDARD DRAWING TITLE
CONDUIT DETAILS

STD. DWG. NO.
AT 6

DGN File: L:\Standard Drawings\Imperial\2017 Approved\1-All Drawings\AT06.dgn
28-NOV-2016

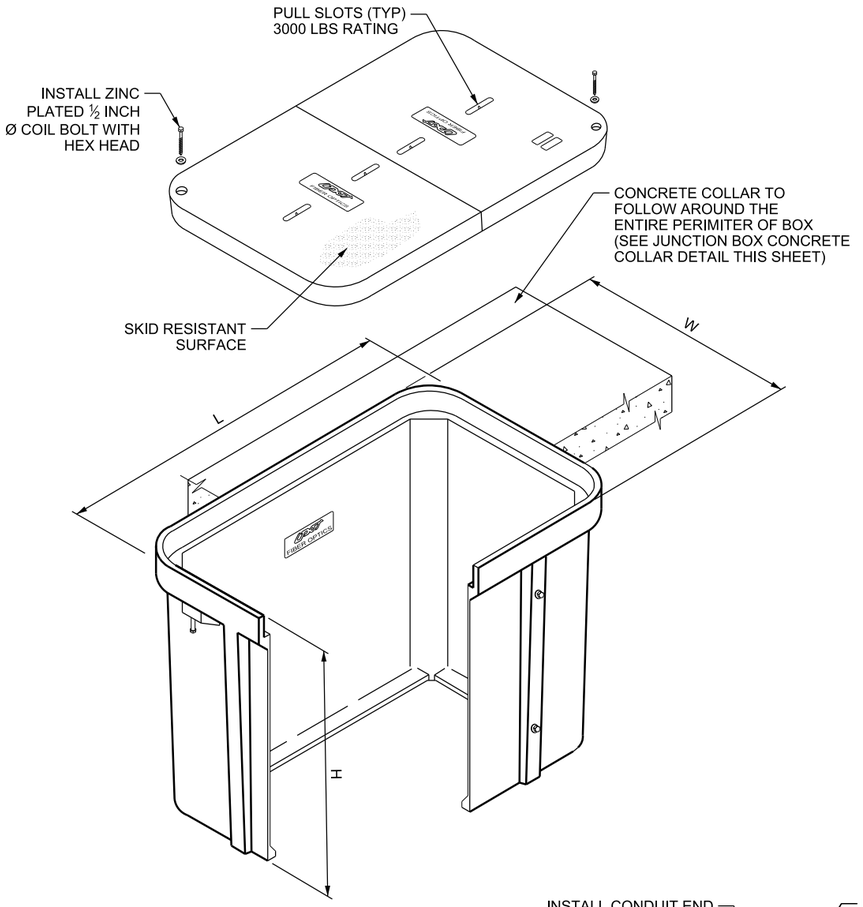

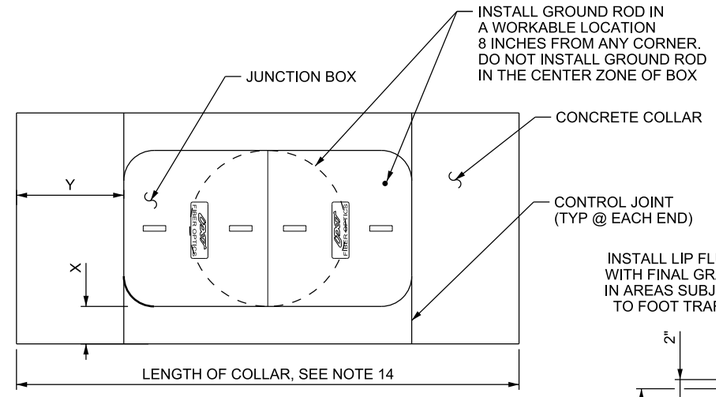

PLAN VIEW - JUNCTION BOX AND CONCRETE COLLAR

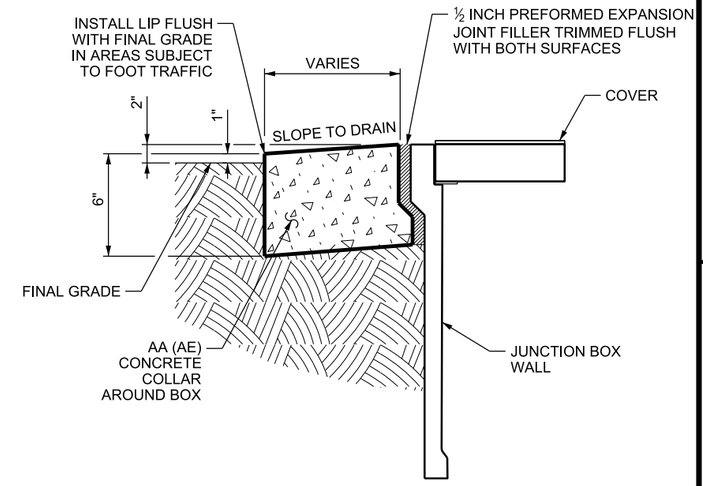

JUNCTION BOX CONCRETE COLLAR DETAIL

TABLE OF DIMENSIONS

BOX TYPE	"W" inch	"L" inch	"H" inch	"X" inch	"Y" inch	LOADING
I-PC	13	24	24	10	10	TIER 22
II-PC	24	36	36	10	24	TIER 22
III-PC	30	48	36	10	24	TIER 22

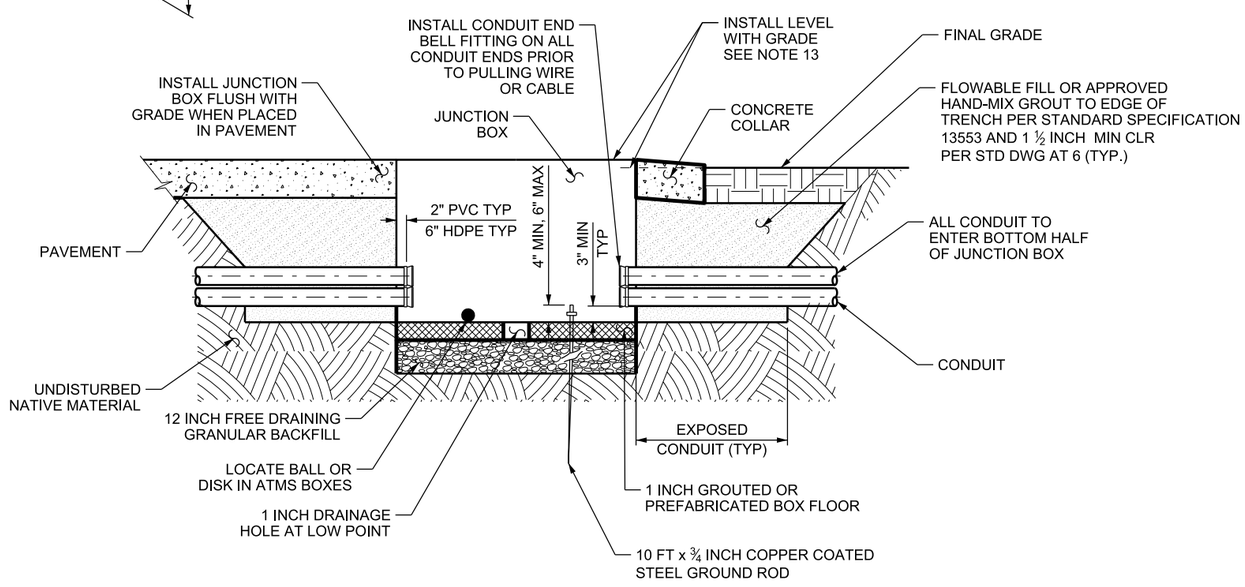

JUNCTION BOX CONDUIT PENETRATION DETAIL

NOTES:

1. BOX LOGO OR NAME PLATE, REFER TO STANDARD SPECIFICATION 13554.
2. DO NOT PLACE JUNCTION BOXES IN THE TRAVELED WAY OR ON FREEWAY SHOULDERS.
3. CONCRETE COLLAR WIDTH VARIES WHEN ADJACENT TO ATMS CABINETS. REFER TO AT AND SL SERIES STD DWGS.
4. PROVIDE CONCRETE COLLARS EXCEPT WITHIN CONCRETE PAVED AREAS.
5. INSTALL CONDUIT PLUG PER STANDARD SPECIFICATION 13554.
6. ALIGN ATMS CONDUIT BY COLOR ON EACH SIDE OF THE JUNCTION BOX.
7. PROVIDE TYPE III-PC JUNCTION BOXES WITH A SPLIT LID.
8. CONFORM TO ANSI/SCTE-77 "SPECIFICATION FOR UNDERGROUND ENCLOSURE INTEGRITY" TIER 22 LOADING FOR ALL JUNCTION BOXES. TIER 22 ID PLATE TO BE VISIBLE ON BOX.
9. EXTEND GROUND ROD A MINIMUM OF 4 INCHES AND A MAXIMUM OF 6 INCHES ABOVE BOTTOM OF JUNCTION BOX.
10. USE INTER SYSTEM GROUNDING BRIDGE CLAMP FOR BONDING TO GROUND ROD. ATTACH NOT MORE THAN 4 WIRES PER CLAMP.
11. DO NOT CUT GROUND RODS.
12. PROVIDE CLEAR SPACE OF AT LEAST 36 INCH FOR PERSONNEL TO PULL LID OFF BOX WITHOUT CONFLICT.
13. PLACE JUNCTION BOXES AND CONCRETE COLLARS LEVEL WITH GRADE ON SLOPES 6:1 OR FLATTER. REFER TO PLANS FOR DETAILS OF JUNCTION BOX PLACEMENTS ON SLOPES STEEPER THAN 6:1. SLOPE CONCRETE COLLAR TO DRAIN AS SHOWN.
14. INSTALL ENTIRE PAD UNIFORMLY TO LONGEST LENGTH WHEN SEVERAL JUNCTION BOXES ARE BEING PLACED ADJACENT TO ONE ANOTHER.

NO.	DATE	APPR.	REMARKS

UTAH DEPARTMENT OF TRANSPORTATION
STANDARD DRAWINGS FOR ROAD AND BRIDGE CONSTRUCTION
SALT LAKE CITY, UTAH

RECOMMENDED FOR APPROVAL — JAN. 01, 2017 DATE
CHAIRMAN STANDARDS COMMITTEE APPROVED — JAN. 01, 2017 DATE
DEPUTY DIRECTOR

POLYMER CONCRETE JUNCTION BOX DETAILS
STANDARD DRAWING TITLE

STD. DWG. NO.
AT 7A

28-NOV-2016 DGN File:L:\Standard Drawings\Imperial\2017 Approved\1-All Drawings\AT07A.dgn

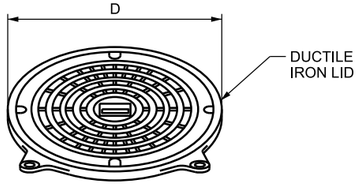

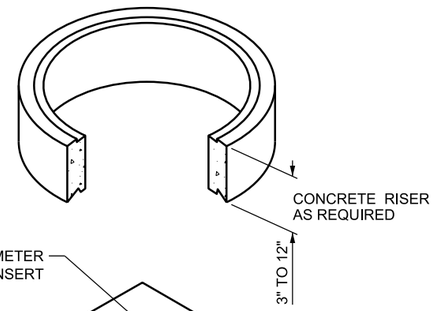

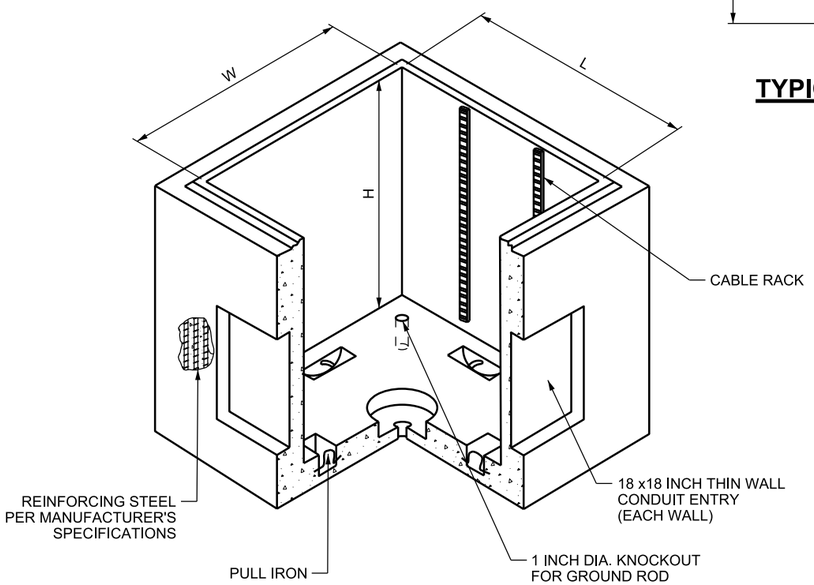

CONCRETE FIBER VAULT WITH MANHOLE LID

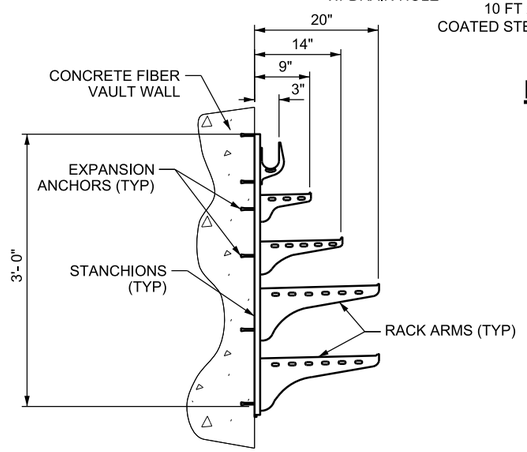

TYPICAL CABLE RACK

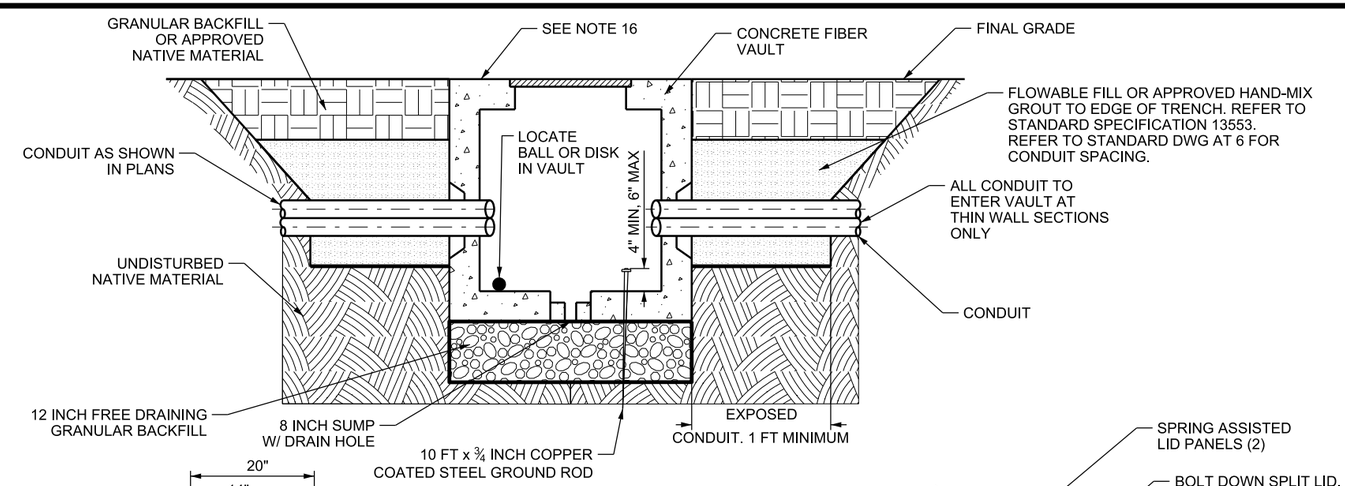

FIBER VAULT CONDUIT PENETRATION DETAL

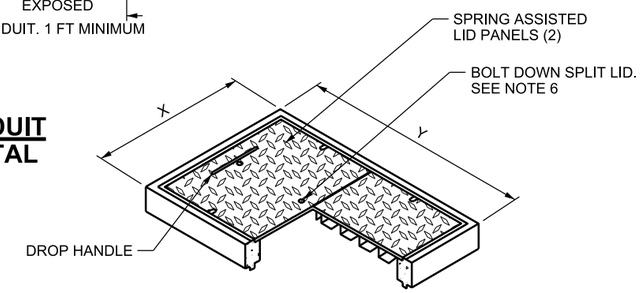

METAL LID FOR TYPE IV-CV FIBER VAULT

VAULT DIMENSIONS

VAULT TYPE	"L" INCH	"W" INCH	"H" INCH	"T" INCH	LID	"X" INCH	"Y" INCH	"D" INCH
IV-CV	48	48	48	6 MIN	HINGED OR MANHOLE	24	36	36
V-CV	48	72	72	6 MIN	MANHOLE ONLY	N/A	N/A	36

NOTES:

1. SUPPLY TYPE IV FIBER VAULT WITH A TAMPERPROOF HINGED METAL LID FOR UNPAVED AREAS, OR A TAMPERPROOF HEAVY DUTY MANHOLE-STYLE LID IN PAVED AREAS. SUPPLY FIBER VAULTS, LIDS, AND COVERS RATED FOR AASHTO LRFD HL-93 LOADING.
2. SUPPLY TYPE V-CV FIBER VAULT WITH A MANHOLE-STYLE LID ONLY.
3. SUPPLY MANHOLE LIDS WITH A HOLE OR SLOT FOR REMOVAL WITH A LEVER OR HOOK. SUPPLY HINGED METAL LIDS WITH DROP HANDLES.
4. SUPPLY VAULTS WITH A PERMANENT INTERNAL LADDER.
5. PROVIDE FIBER VAULT LIDS MARKED, "UDOT FIBER OPTIC" USING MIN 3 INCH HIGH LETTERING WITH ⅛ INCH THICKNESS. FORM LETTERS BY ENGRAVING, CASTING, STAMPING, OR WITH A PRECISE WELD BEAD.
6. PROVIDE HINGED METAL LID WITH A MINIMUM OF 3/32 INCH HIGH DIAMOND PATTERN OR SIMILAR SURFACE.
7. PROVIDE FIBER VAULTS WITH A HEAVY-DUTY NON-METALLIC CABLE STORAGE RACK SYSTEM. PROVIDE RACK ARMS AND STANCHIONS CAPABLE OF SUPPORTING A MINIMUM OF 250 LB FOR TYPE IV-CV FIBER VAULT RACKS, INCLUDE A MINIMUM OF 36 INCH RACK STANCHIONS AND 4 RACK ARMS. FOR TYPE V-CV FIBER VAULTS, INCLUDE A MINIMUM OF 45 INCH RACK STANCHIONS AND 5 RACK ARMS.
8. CONDUITS PENETRATE FIBER VAULT AT THIN WALL SECTIONS ONLY. CORE DRILL HOLE IN THIN WALL SECTION TO CONDUIT SIZE PLUS ¼ INCH. DO NOT "KNOCK OUT" THE THIN WALL SECTION.
9. COMPLY WITH OSHA REQUIREMENTS FOR ENCLOSED WORK SPACES.
10. BOND AND GROUND ALL EXPOSED METALLIC COMPONENTS OF THE FIBER VAULT PER NEC 250 IF ARMORED FIBER OPTIC CABLE IS USED.
11. INSTALL CONDUIT PLUGS ACCORDING TO STANDARD SPECIFICATION 13553.
12. ALIGN ATMS CONDUIT BY COLOR ON EACH SIDE OF FIBER VAULT.
13. EXTEND GROUND ROD A MINIMUM OF 4 INCHES AND A MAXIMUM OF 6 INCHES ABOVE BOTTOM OF FIBER VAULT.
14. USE GROUND ROD BRIDGE CLAMP FOR BONDING TO GROUND ROD. ATTACH NOT MORE THAN 4 WIRES PER CLAMP.
15. DO NOT CUT GROUND RODS.
16. INSTALL VAULT PLUMB AND LEVEL. GRADE BACKFILL FLUSH WITH VAULT.

NO.	DATE	APPR.	REMARKS

UTAH DEPARTMENT OF TRANSPORTATION
STANDARD DRAWINGS FOR ROAD AND BRIDGE CONSTRUCTION
SALT LAKE CITY, UTAH

RECOMMENDED FOR APPROVAL — JAN. 01, 2017 DATE
CHAIRMAN STANDARDS COMMITTEE APPROVED — JAN. 01, 2017 DATE
DEPUTY DIRECTOR

PRECAST CONCRETE FIBER OPTIC AND UTILITY VAULT DETAILS
STANDARD DRAWING TITLE

STD. DWG. NO.
AT 7B

DGN File: L:\Standard Drawings\Imperial\2017 Approved\1-All Drawings\AT07B.dgn
28-NOV-2016

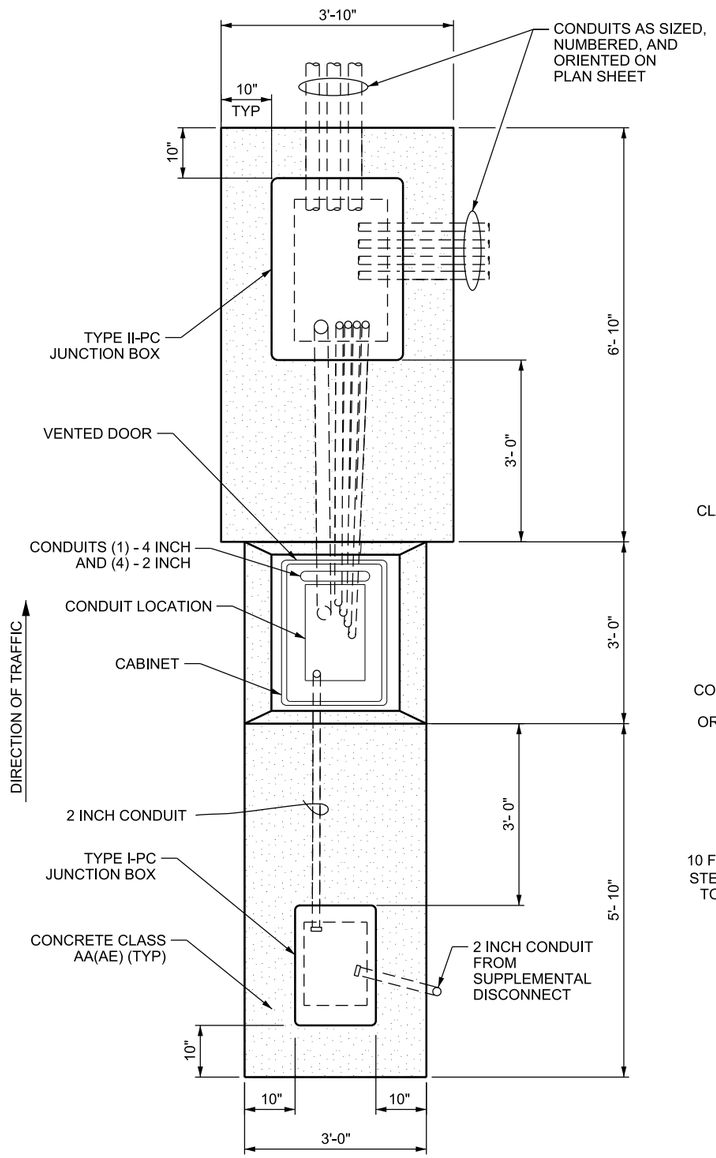

PLAN VIEW

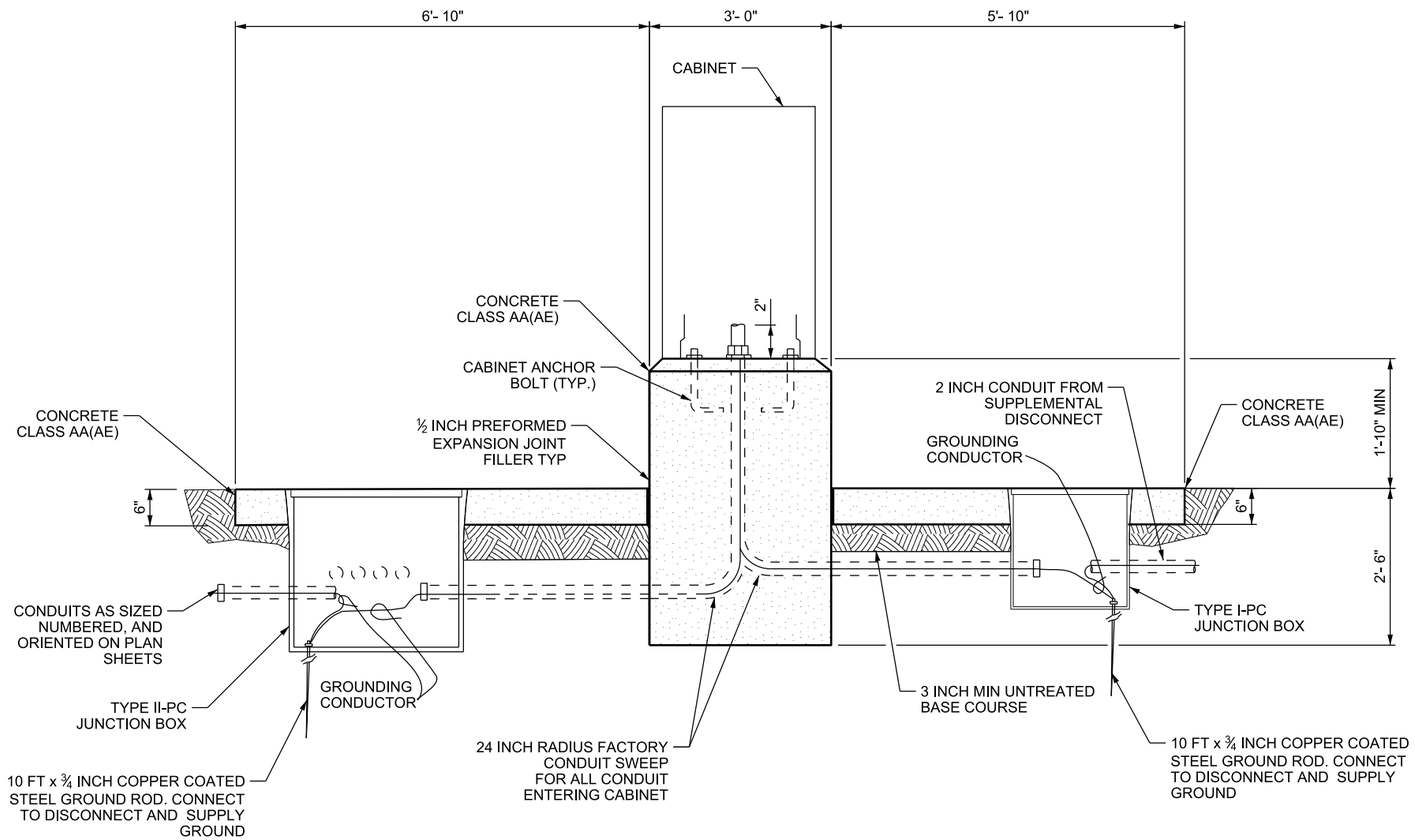

SIDE ELEVATION

(A) ATMS CABINET

NOTES:

1. SEE STD DWG AT 9 FOR CABINET DISCONNECT AND TRANSFORMER DETAIL.
2. FIELD VERIFY CONDUIT LAYOUT IN FOUNDATION TO AVOID CONFLICT WITH CABINET.
3. SEE STD DWG AT 7 FOR TYPICAL ATMS JUNCTION BOX INSTALLATION.

REVISIONS

NO.	DATE	APPR.	REMARKS

UTAH DEPARTMENT OF TRANSPORTATION
STANDARD DRAWINGS FOR ROAD AND BRIDGE CONSTRUCTION
SALT LAKE CITY, UTAH

RECOMMENDED FOR APPROVAL — JAN. 01, 2017 DATE
CHAIRMAN STANDARDS COMMITTEE APPROVED — JAN. 01, 2017 DATE
DEPUTY DIRECTOR

STANDARD DRAWING TITLE: ATMS CABINET

STD. DWG. NO.
AT 8

DGN File:L:\Standard_Drawings\Imperial\2017 Approved\1-All Drawings\AT08.dgn
28-NOV-2016

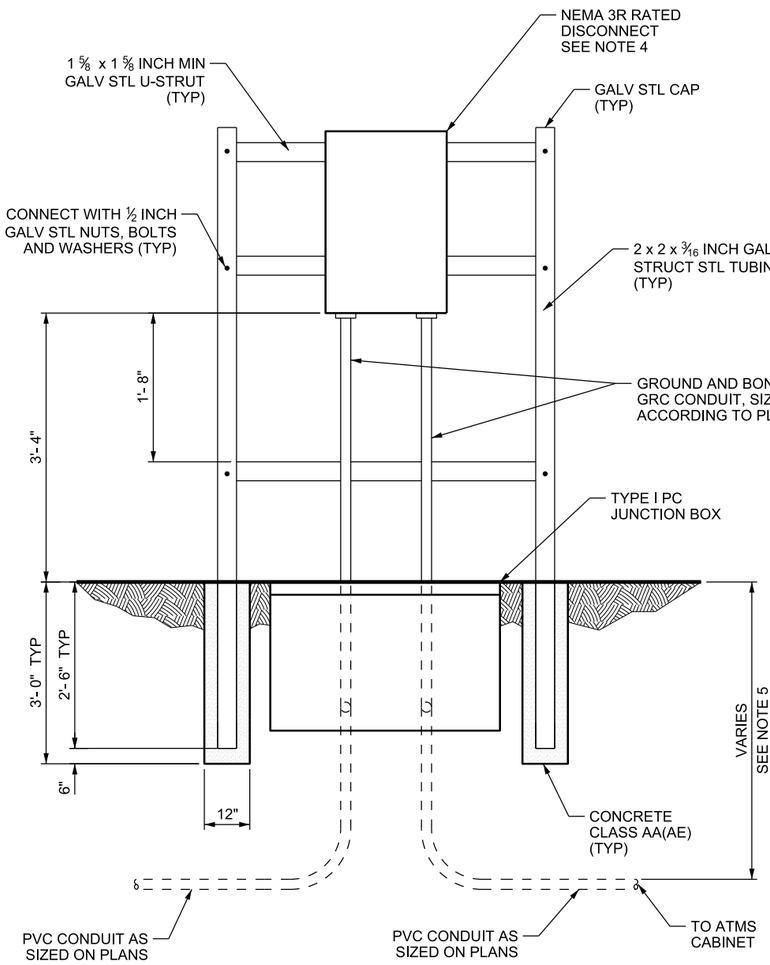

A **SUPPLEMENTAL DISCONNECT FRAME**

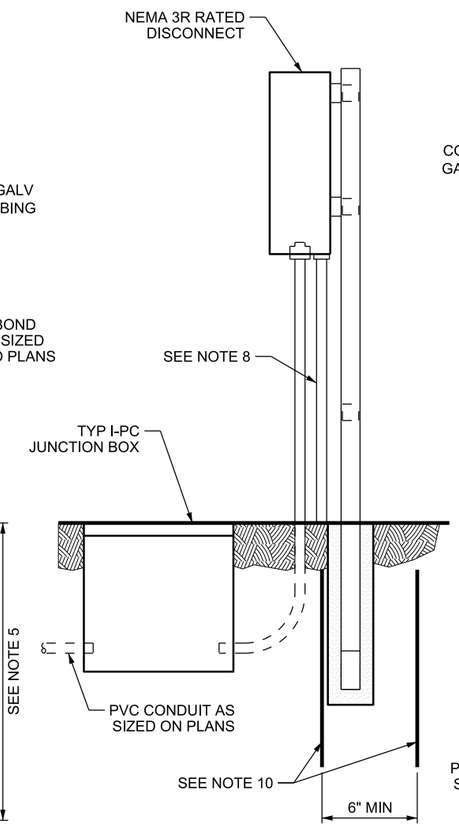

PROFILE VIEW

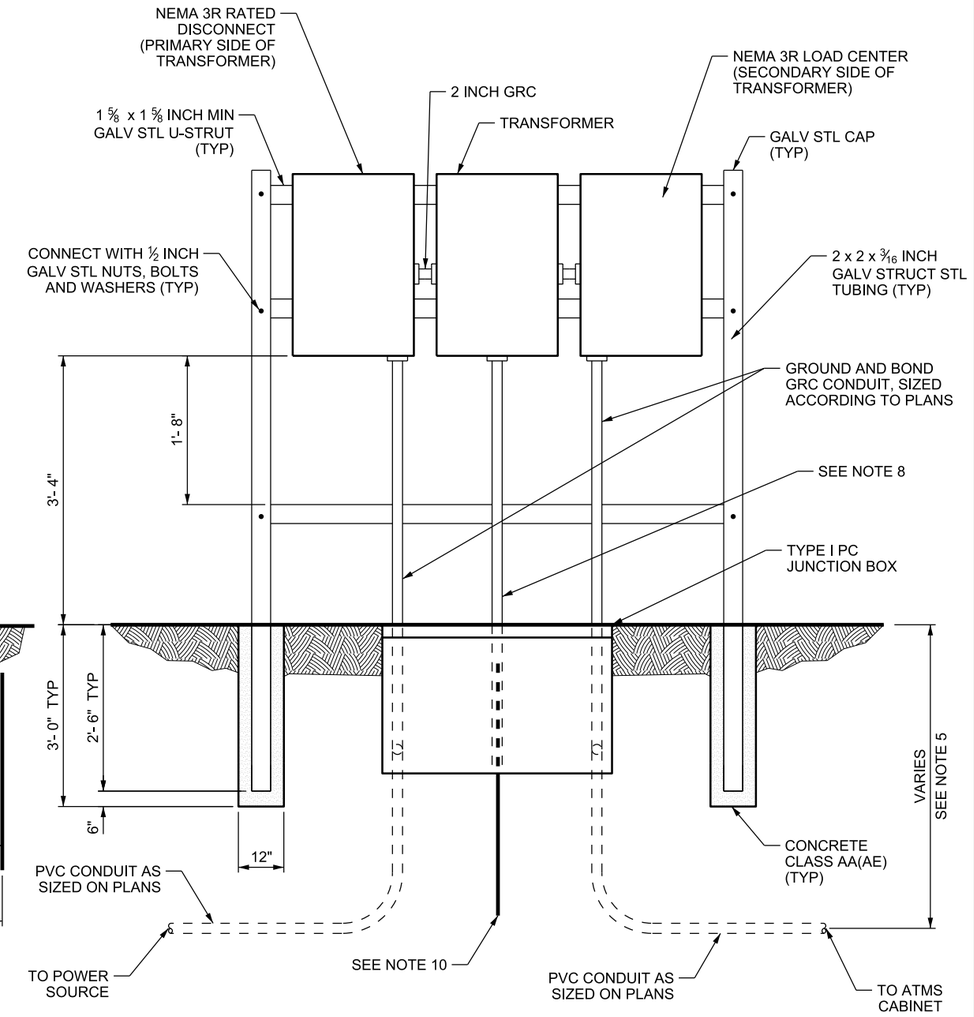

B **SUPPLEMENTAL DISCONNECT FRAME WITH TRANSFORMER FRAME**

NOTES:

1. LOCATE FRAME 10 TO 15 FT FROM CABINET.
2. ROUND OFF SHARP EDGES OF STRUCTURAL TUBING. PAINT CUT ENDS OF FRAMING STRUTS WITH ZINC RICH PAINT.
3. APPLY CORROSION PROTECTION TO PORTION OF STRUT BELOW GRADE.
4. ATTACH TRANSFORMER, DISCONNECT AND LOAD CENTER TO FRAMING STRUT WITH WATERTIGHT GASKETS AND GALVANIZED HARDWARE.
5. REFER TO STANDARD SPECIFICATION 13553 FOR CONDUIT DEPTH.
6. USE ONLY FACTORY PRODUCED CONDUIT SWEEPS.
7. SIZE ENCLOSURE TO ACCOMMODATE CONDUIT SIZES PER PLAN.
8. INSTALL 1 INCH SCHEDULE 80 PVC AS PROTECTION FOR GROUNDING ELECTRODE CONDUCTOR.
9. ALL MATERIALS USED MUST BE RATED FOR THE VOLTAGE AND CURRENT AS SHOWN.
10. INSTALL 2 EACH 10 FT X 3/4 INCH GROUND RODS DIRECTLY BELOW SUPPORT FRAME, SPACED MINIMUM 6 FT APART AT TRANSFORMER LOCATIONS. INSTALL 6 AWG COPPER GROUNDING ELECTRODE CONDUCTOR BETWEEN GROUND RODS 6 INCHES BELOW GRADE AND BOND TO TRANSFORMER SECONDARY ACCORDING TO NEC ARTICLE 250 REQUIREMENTS.
11. LOCATE TYPE I PC JUNCTION BOX MINIMUM 6 FT AND MAXIMUM 10 FT FROM FRAME.

NO.	DATE	APPR.	REMARKS

UTAH DEPARTMENT OF TRANSPORTATION
STANDARD DRAWINGS FOR ROAD AND BRIDGE CONSTRUCTION
SALT LAKE CITY, UTAH

RECOMMENDED FOR APPROVAL — JAN. 01, 2017 DATE
CHAIRMAN STANDARDS COMMITTEE APPROVED — JAN. 01, 2017 DATE
DEPUTY DIRECTOR

ATMS CABINET DISCONNECT AND TRANSFORMER FRAME
STANDARD DRAWING TITLE

STD. DWG. NO.
AT 9

DGN File:L:\Standard_Drawings\Imperial\2017 Approved\1-All Drawings\AT09.dgn
28-NOV-2016

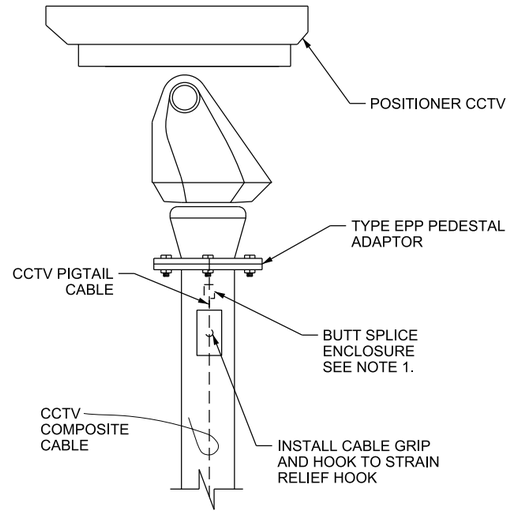

(A) MOUNTING DETAIL
PEDESTAL MOUNTED POSITIONER CCTV (ESPRIT)

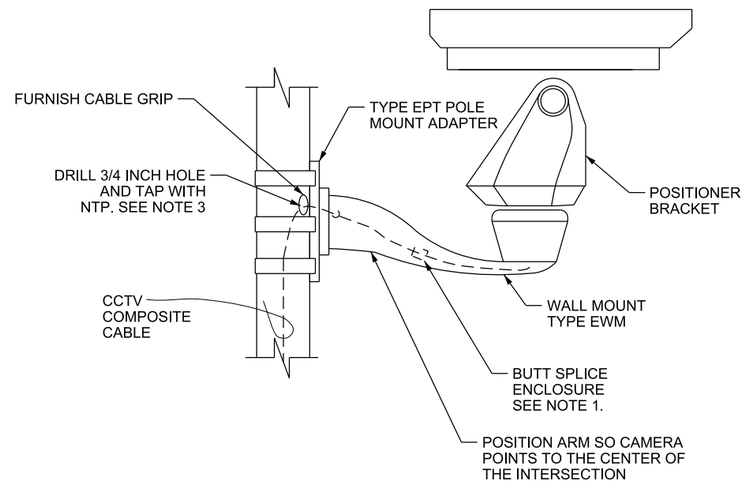

(B) MOUNTING DETAIL
POLE MOUNTED POSITIONER CCTV (ESPRIT)

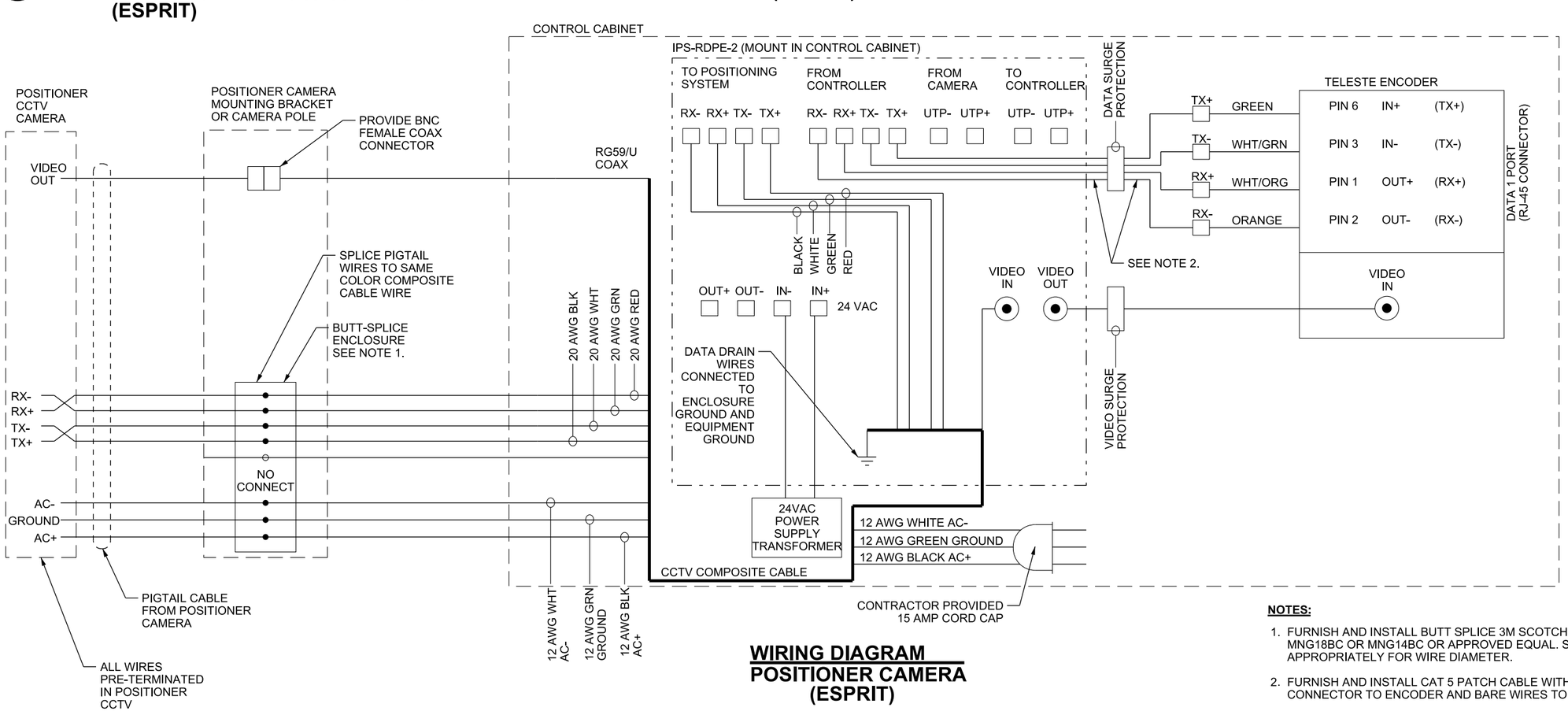

WIRING DIAGRAM
POSITIONER CAMERA (ESPRIT)

NOTES:

1. FURNISH AND INSTALL BUTT SPLICE 3M SCOTCHLOCK MNG18BC OR MNG14BC OR APPROVED EQUAL. SIZE APPROPRIATELY FOR WIRE DIAMETER.
2. FURNISH AND INSTALL CAT 5 PATCH CABLE WITH RJ-45 CONNECTOR TO ENCODER AND BARE WIRES TO RDPE.
3. SUPPLY AND INSTALL CORD CONNECTOR HUBBELL SHC1032ZP OR EQUAL. SIZE APPROPRIATELY FOR WIRE DIAMETER. HOLE MAY BE BELOW MOUNTING PLATE IF A DRIP LOOP IS USED.

NO.	DATE	APPR.	REMARKS

UTAH DEPARTMENT OF TRANSPORTATION
STANDARD DRAWINGS FOR ROAD AND BRIDGE CONSTRUCTION
SALT LAKE CITY, UTAH

RECOMMENDED FOR APPROVAL — JAN. 10, 2017 DATE
CHAIRMAN STANDARDS COMMITTEE APPROVED — JAN. 10, 2017 DATE
DEPUTY DIRECTOR — DATE

STANDARD DRAWING TITLE: CCTV MOUNTING DETAIL AND WIRING DIAGRAM

STD. DWG. NO. AT 10A

DGN File: L:\Standard Drawings\Imperial\2017 Approved\1-All Drawings\AT10A.dgn
28-NOV-2016

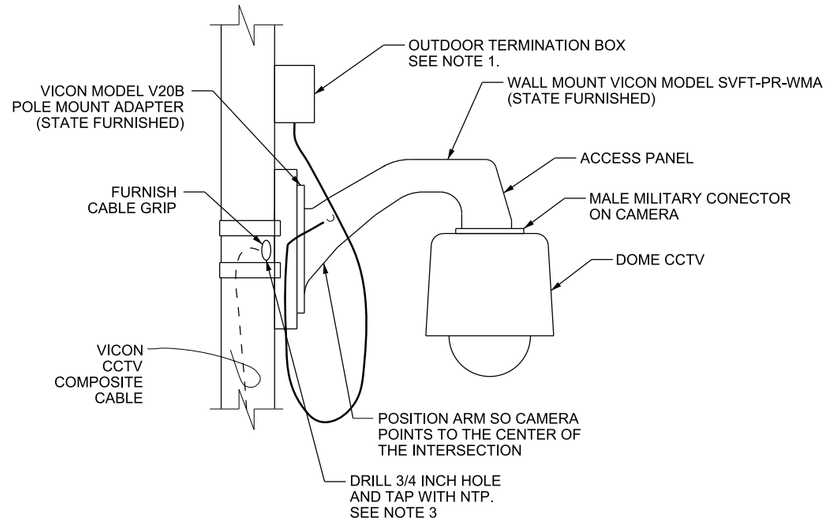

A MOUNTING DETAIL POLE MOUNTED DOME CCTV (VICON)

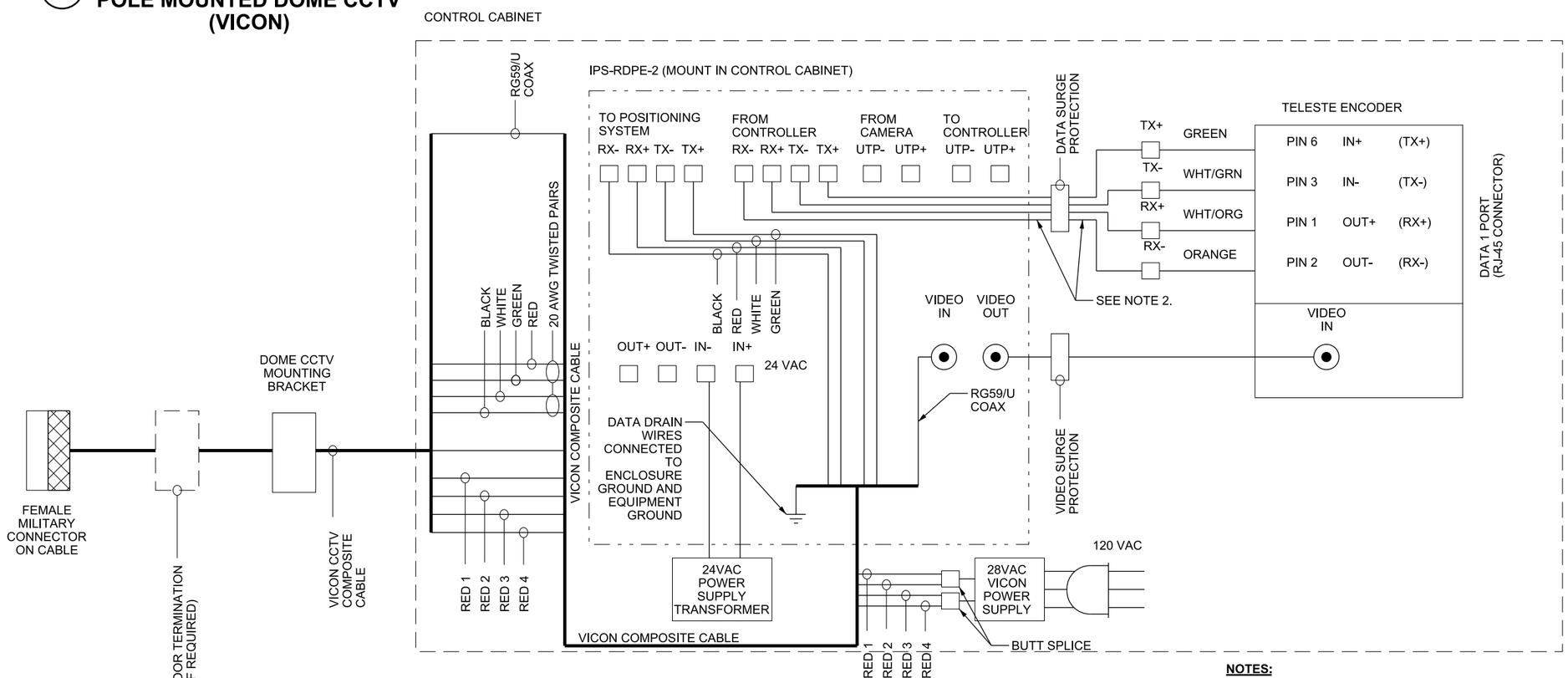

B WIRING DIAGRAM DOME CAMERA (VICON)

NOTES:

1. USE OUTDOOR TERMINATION BOX IF RETROFITTING NEW VICON DOME TO EXISTING PELCO LOCATION. MOUNT BOX 6 TO 12 INCHES ABOVE WIRE HOLE. SEE STD DWG AT 10D.
2. FURNISH AND INSTALL CAT 5 PATCH CABLE WITH RJ-45 CONNECTOR TO ENCODER AND BARE WIRES TO RDPE.
3. SUPPLY AND INSTALL CORD CONNECTOR HUBBELLL SHC1032ZP OR EQUAL. SIZE APPROPRIATELY FOR WIRE DIAMETER. HOLE MAY BE BELOW MOUNTING PLATE IF DRIP LOOP IS USED.

REVISIONS

NO.	DATE	APPR.	REMARKS

UTAH DEPARTMENT OF TRANSPORTATION
STANDARD DRAWINGS FOR ROAD AND BRIDGE CONSTRUCTION
SALT LAKE CITY, UTAH

RECOMMENDED FOR APPROVAL — JAN. 01, 2017 DATE
CHAIRMAN STANDARDS COMMITTEE APPROVED — JAN. 01, 2017 DATE
DEPUTY DIRECTOR

STANDARD DRAWING TITLE
CCTV MOUNTING DETAIL AND WIRING DIAGRAM

STD. DWG. NO.
AT 10B

28-NOV-2016 DGN File:L:\Standard Drawings\Imperial\2017 Approved\1-All Drawings\AT10B.dgn

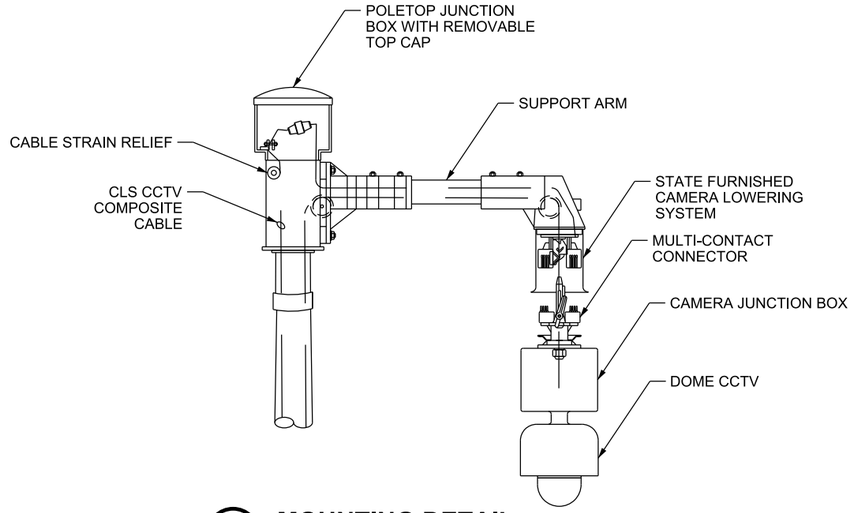

(A) MOUNTING DETAIL
CAMERA LOWERING SYSTEM (VICON)

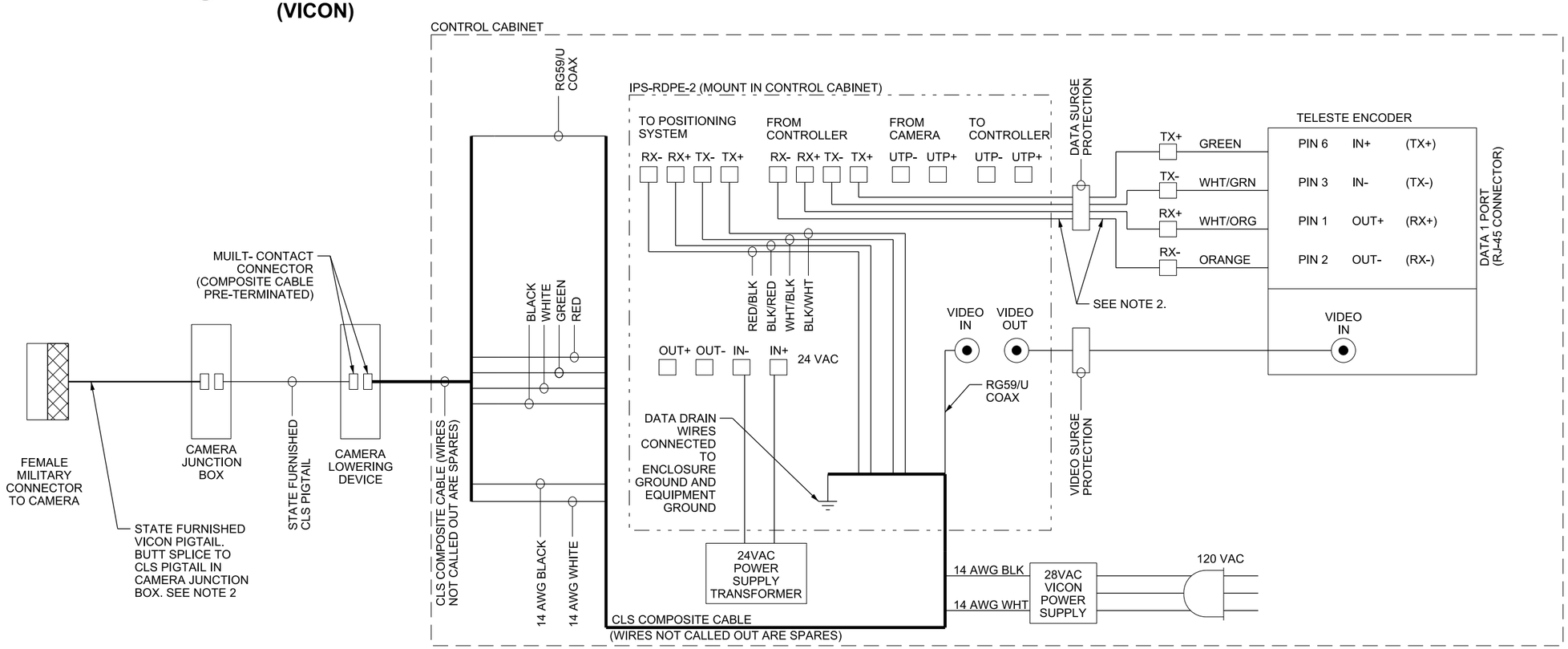

(B) WIRING DIAGRAM
DOME CAMERA (VICON)

NOTES:

1. FURNISH AND INSTALL CAT 5 PATCH CABLE WITH RJ-45 CONNECTOR TO ENCODER AND BARE WIRES TO RDPE.
2. FURNISH & INSTALL BUTT SPLICE 3M SCOTCHLOCK MNG18BC OR MNG14BC OR APPROVED EQUAL. SIZE APPROPRIATELY FOR WIRE DIAMETER. USE BNC CONNECTOR FOR COAXIAL CABLE. SEE DETAIL B ON STD DWG AT 10D.

NO.	DATE	APPR.	REMARKS

UTAH DEPARTMENT OF TRANSPORTATION
STANDARD DRAWINGS FOR ROAD AND BRIDGE CONSTRUCTION
SALT LAKE CITY, UTAH

RECOMMENDED FOR APPROVAL — JAN. 10, 2017 DATE
CHAIRMAN STANDARDS COMMITTEE APPROVED — JAN. 10, 2017 DATE
DEPUTY DIRECTOR

STANDARD DRAWING TITLE: CCTV MOUNTING DETAIL AND WIRING DIAGRAM

STD. DWG. NO. AT 10C

DGN File:L:\Standard Drawings\Imperial\2017 Approved\1-All Drawings\AT10C.dgn
28-NOV-2016

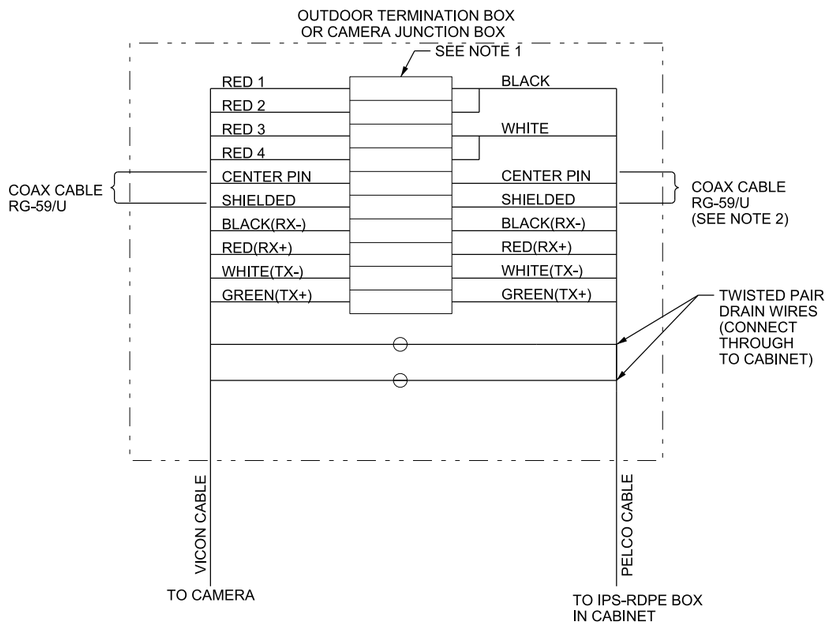

(A) SPLICING DIAGRAM
VICON INTO PELCO

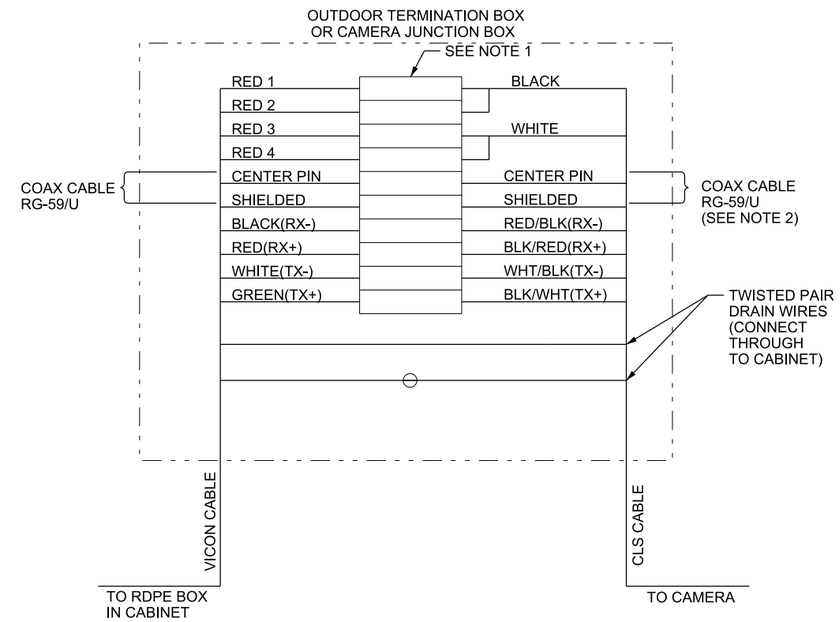

(B) SPLICING DIAGRAM
VICON INTO CLS

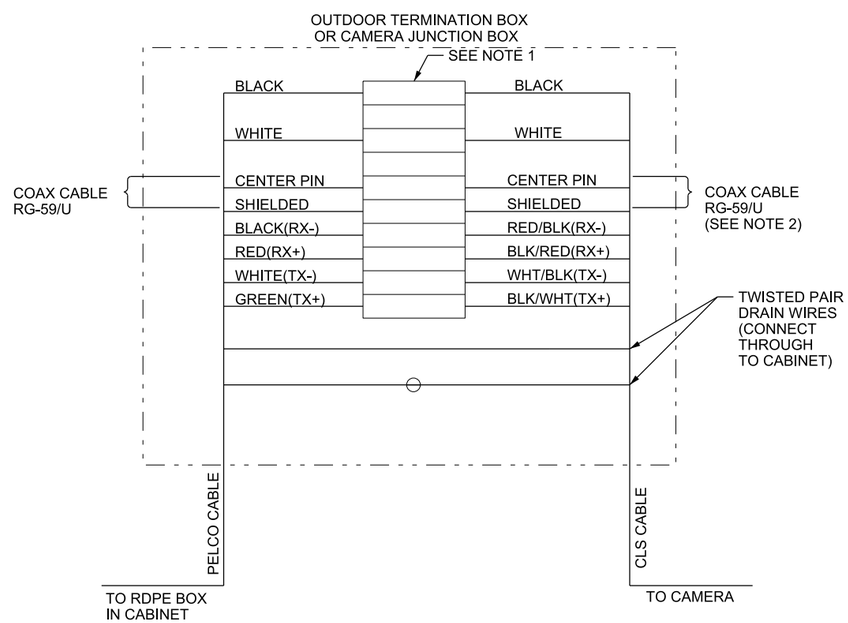

(C) SPLICING DIAGRAM
PELCO INTO CLS

NOTES:

1. FURNISH AND INSTALL BUTT SPLICE 3M SCOTCHLOCK (MNG 18BC, MNG 14BC) OR APPROVED EQUAL. SIZE APPROPRIATELY FOR WIRE DIAMETER.
2. USE BNC CONNECTOR FOR RG-59 COAX CABLE.
3. WIRES NOT CALLED OUT ARE SPARES.
4. DETAIL "A" USED WHEN INSTALLING A NEW VICON DOME CAMERA AT AN EXISTING PELCO CAMERA LOCATION.
5. DETAIL "B" USED WHEN INSTALLING A NEW CAMERA ON A CLS POLE WHEN THE FACTORY PRE-TERMINATED CLS CABLE DOES NOT REACH THE CONTROL CABINET.
6. DETAIL "C" USED WHEN INSTALLING A NEW CAMERA ON A CLS POLE WHEN THE FACTORY PRE-TERMINATED CLS CABLE DOES NOT REACH THE CONTROL CABINET.

NO.	DATE	APPR.	REMARKS

UTAH DEPARTMENT OF TRANSPORTATION
STANDARD DRAWINGS FOR ROAD AND BRIDGE CONSTRUCTION
SALT LAKE CITY, UTAH

RECOMMENDED FOR APPROVAL — JAN. 10, 2017 DATE
CHAIRMAN STANDARDS COMMITTEE APPROVED — JAN. 10, 2017 DATE
DEPUTY DIRECTOR

CAMERA CABLE
SPLICING DIAGRAMS
STANDARD DRAWING TITLE

STD. DWG. NO.
AT 10D

DGN File:L:\Standard Drawings\Imperial\2017 Approved\1-All Drawings\AT10D.dgn
28-NOV-2016

SWITCH 1 IS USED FOR SETTING THE BAUD RATE

SWITCH 2 IS USED FOR SETTING THE ADDRESS

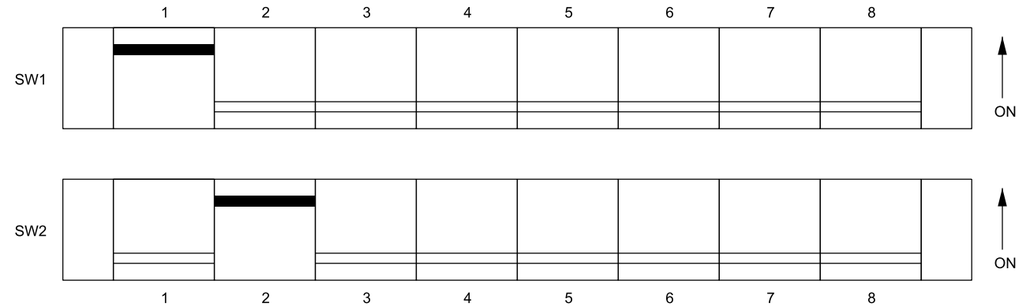

(A) POSITIONER CAMERA ES 30PC/ES 31PC (OLD)

DIP SWITCH SETTINGS (ESPRIT)

SWITCH 2 IS USED FOR SETTING THE BAUD RATE

SWITCH 1 IS USED FOR SETTING THE ADDRESS

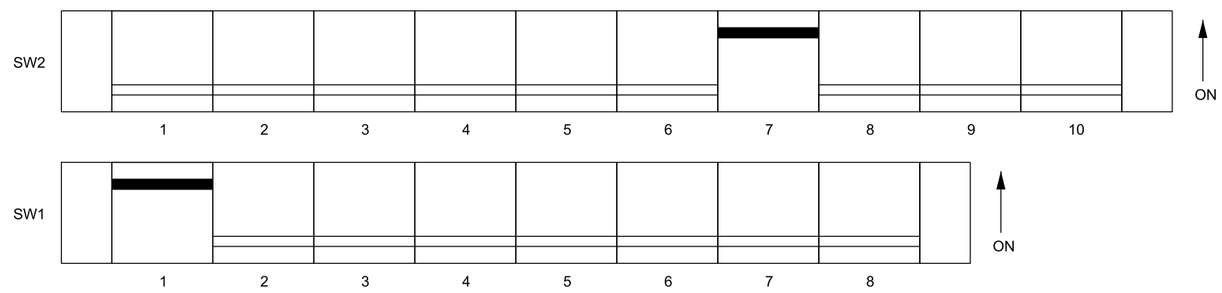

(B) POSITIONER CAMERA ES 40/ES 41 (NEW)

DIP SWITCH SETTINGS (ESPRIT)

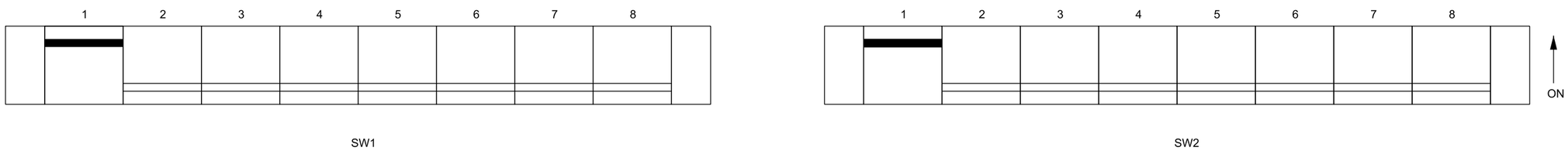

SWITCH 1 IS USED FOR SETTING THE ADDRESS

SWITCH 2 IS USED FOR SETTING THE BAUD RATE

(C) DOME CAMERA

DIP SWITCH SETTINGS (VICON)

NOTES:

1. SET ESPRIT POWER SUPPLY TO 115 VAC. POWER SUPPLY LOCATED IN BASE OF CAMERA.

NO.	DATE	APPR.	REMARKS

REVISIONS

UTAH DEPARTMENT OF TRANSPORTATION
STANDARD DRAWINGS FOR ROAD AND BRIDGE CONSTRUCTION
SALT LAKE CITY, UTAH

RECOMMENDED FOR APPROVAL — JAN. 01, 2017 DATE

CHAIRMAN STANDARDS COMMITTEE APPROVED — JAN. 01, 2017 DATE

DEPUTY DIRECTOR

CCTV
DIP SWITCH SETTINGS

STANDARD DRAWING TITLE

STD. DWG. NO.
AT 10E

28-NOV-2016 DGN File:L:\Standard_Drawings\Imperial\2017 Approved\1-All Drawings\AT10E.dgn

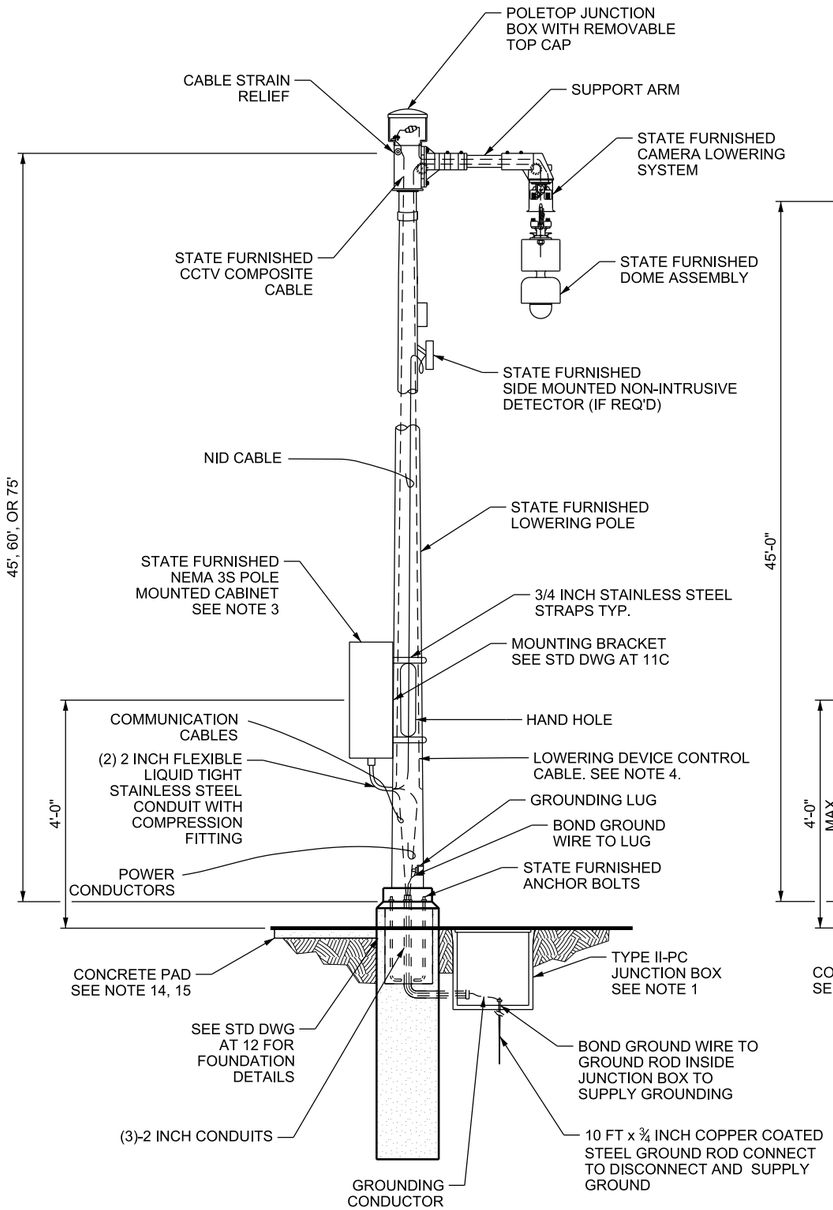

(A) CAMERA LOWERING POLE DETAIL

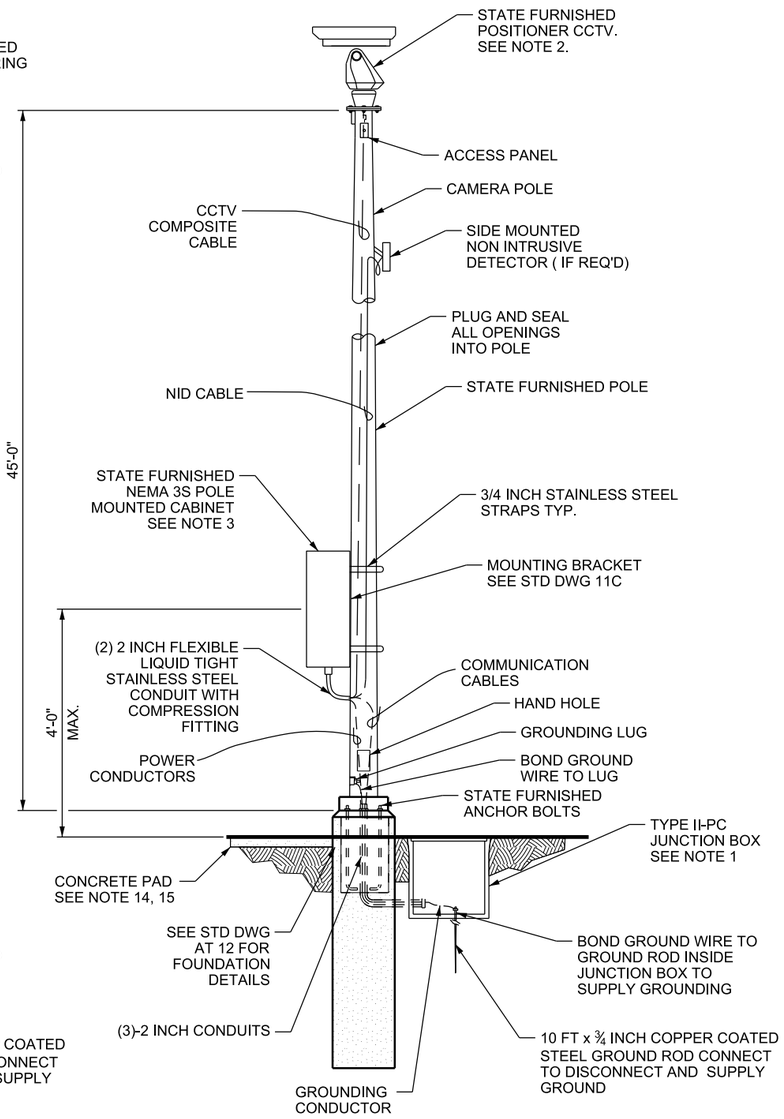

(B) NON-LOWERING CCTV POLE DETAIL

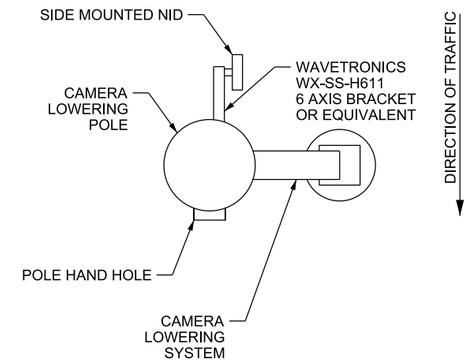

(C) CAMERA LOWERING POLE NID MOUNTING DETAIL TOP VIEW

NOTES:

1. REFER TO STD DWG AT 7 FOR JUNCTION BOX DETAILS.
2. REFER TO STD DWG AT 10A, 10B, AND 10C FOR CAMERA MOUNTING DETAILS.
3. USE POLE MOUNTED CABINET UNLESS PAD MOUNTED ATMS CABINET IS CALLED FOR ON PLANS.
4. LOWERING CABLE MUST NOT CONTACT ANY OTHER CABLE.
5. MOUNT NID TO NOT INTERFERE WITH CAMERA LOWERING OPERATION.
6. LOCATE POLE AT STATION AND OFFSET AS SHOWN.
7. CABINET MUST NOT INTERFERE WITH CAMERA LOWERING OPERATION.
8. ERECT CAMERA LOWERING POLE WITH HAND HOLE ON DOWN STREAM TRAFFIC SIDE OF POLE.
9. DO NOT INSTALL CAMERA LOWERING SYSTEM OR NID ON SAME SIDE OF POLE AS HAND HOLE.
10. ALL CONDUIT ENTRY MUST BE THROUGH BOTTOM OF CABINET.
11. ALL FLEXIBLE STEEL CONDUIT MUST BE INTENDED FOR OUTDOOR APPLICATION.
12. SEE STD DWG AT 11C FOR CABINET POLE MOUNTING DETAILS.
13. REFER TO STANDARD SPECIFICATION 16530 FOR GROUNDING REQUIREMENTS.
14. PROVIDE AN 8 FT WIDE X 3 FT DEEP X 4 INCH DEEP CONCRETE PAD, CENTERED UNDER THE MODEL 336S STATE FURNISHED POLE MOUNTED CABINET.
15. PROVIDE A 4 FT DEEP X 3 FT WIDE X 4 INCH DEEP CONCRETE PAD CENTERED UNDER A FRONT OPENING, STATE FURNISHED POLE MOUNTED CABINET.

NO.	DATE	APPR.	REMARKS

UTAH DEPARTMENT OF TRANSPORTATION
STANDARD DRAWINGS FOR ROAD AND BRIDGE CONSTRUCTION
SALT LAKE CITY, UTAH

RECOMMENDED FOR APPROVAL — JAN. 01, 2017 DATE
CHAIRMAN STANDARDS COMMITTEE APPROVED — JAN. 01, 2017 DATE
DEPUTY DIRECTOR

STANDARD DRAWING TITLE
CCTV POLE MOUNTING DETAILS

STD. DWG. NO.
AT 11A

28-NOV-2016 DGN File:L:\Standard Drawings\Imperial\2017 Approved\1-All Drawings\AT11A.dgn

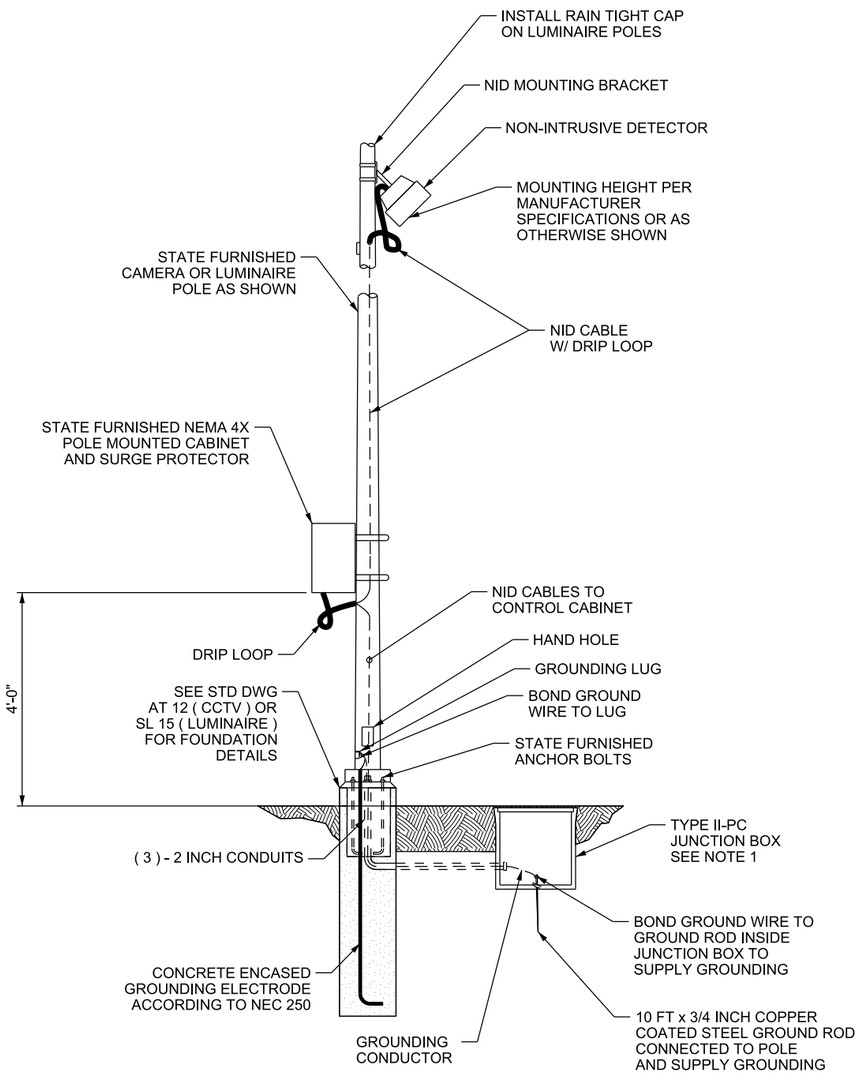

A NID MOUNTING DETAIL
NON-LOWERING AND LUMINAIRE POLES

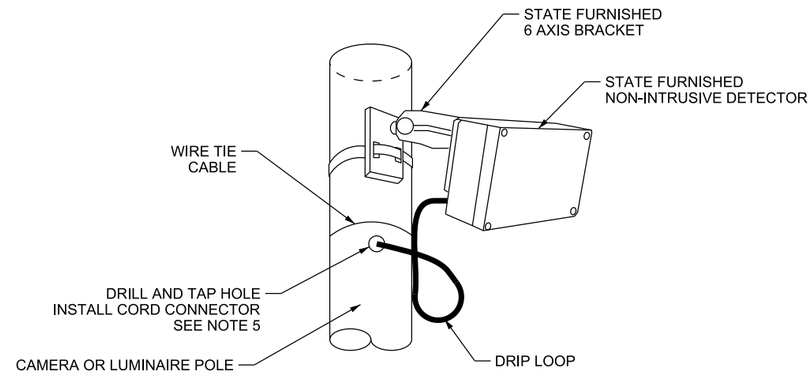

B NID MOUNT ASSEMBLY DETAILS
NON-LOWERING AND LUMINAIRE POLES

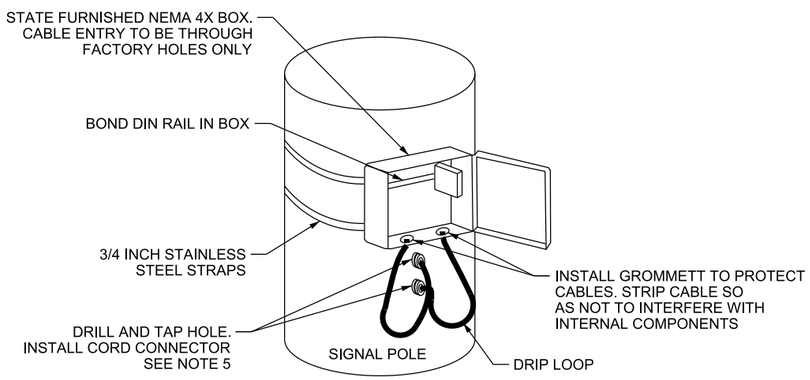

C POLE MOUNT ENCLOSURE DETAILS
CABLE ENTRY THROUGH BOTTOM

NOTES:

1. REFER TO STD DWG AT 7 FOR JUNCTION BOX DETAILS.
2. POLE MOUNTED CABINET REQUIRED UNLESS PAD MOUNTED ATMS CABINET IS PROVIDED.
3. REFER TO STD DWG SL 5D FOR LUMINAIRE POLE DETAILS.
4. LOCATE POLE AT STATION AND OFFSET AS SHOWN.
5. SUPPLY AND INSTALL CORD CONNECTOR SIZED APPROPRIATELY FOR WIRE. USE THOMAS AND BETTS, REMKE OR, HUBBELL SHC1023 CORD CONNECTORS.
6. USE SIDE MOUNT NID BRACKET ON CAMERA LOWERING POLE. DO NOT MOUNT NID DIRECTLY ABOVE HAND HOLE OR IN THE CAMERA LOWERING PATH.
7. CABLE ENTRY INTO POLE MOUNT BOX TO BE THROUGH BOTTOM ONLY. DO NOT DRILL HOLES IN BACK OF BOX.
8. REFER TO STANDARD SPECIFICATION 16530 FOR CONCRETE ENCASED ELECTRODE REQUIREMENTS.

REVISIONS

NO.	DATE	APPR.	REMARKS

UTAH DEPARTMENT OF TRANSPORTATION
STANDARD DRAWINGS FOR ROAD AND BRIDGE CONSTRUCTION
SALT LAKE CITY, UTAH

RECOMMENDED FOR APPROVAL — JAN. 01, 2017 DATE
CHAIRMAN STANDARDS COMMITTEE APPROVED — JAN. 01, 2017 DATE
DEPUTY DIRECTOR

NON-INTRUSIVE DETECTOR MOUNTING DETAILS
STANDARD DRAWING TITLE

STD. DWG. NO.
AT 11B

28-NOV-2016 DGN File:L:\Standard_Drawings\Imperial\2017 Approved\1-All Drawings\AT11B.dgn

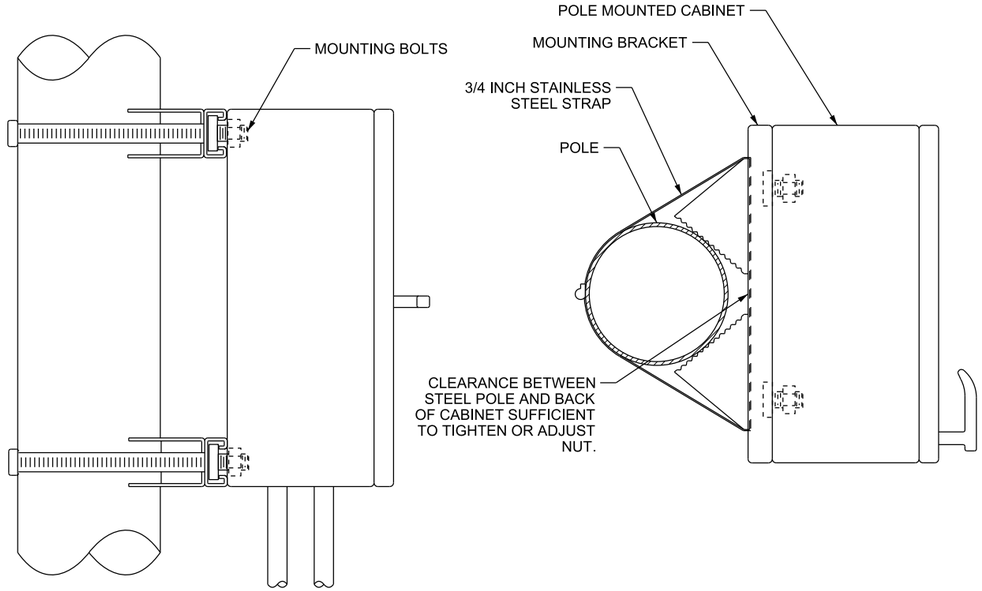

(A) POLE MOUNT CABINET DETAILS TYPE A

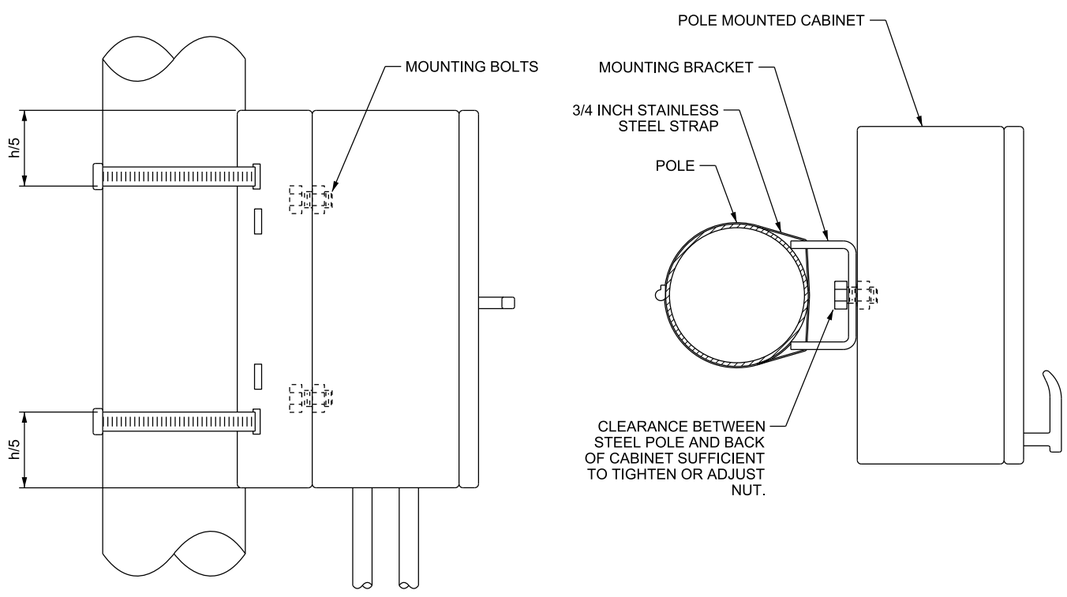

(B) POLE MOUNT CABINET DETAILS TYPE B

NOTES:

1. USE MOUNTING HARDWARE INTENDED TO MOUNT CABINETS TO POLES. FOLLOW MANUFACTURER'S INSTRUCTIONS AND LOAD RATINGS.
2. USE TWO BRACKETS PER CABINET OR A FULL HEIGHT BRACKET.
3. USE TYPE A OR TYPE B MOUNTING SYSTEM HARDWARE AND MOUNTING SYSTEM. MUST BE APPROVED BY THE ENGINEER IN ADVANCE.
4. CONDUIT ENTRY TO BE THROUGH BOTTOM OF CABINET ONLY.
5. DO NOT WELD OR RIVIT BRACKET TO CABINET UNLESS FACTORY INSTALLED.

NO.	DATE	APPR.	REMARKS

UTAH DEPARTMENT OF TRANSPORTATION
STANDARD DRAWINGS FOR ROAD AND BRIDGE CONSTRUCTION
SALT LAKE CITY, UTAH

RECOMMENDED FOR APPROVAL — JAN. 10, 2017 DATE
CHAIRMAN STANDARDS COMMITTEE APPROVED — JAN. 10, 2017 DATE
DEPUTY DIRECTOR

POLE MOUNTED CABINET BRACKET
STANDARD DRAWING TITLE

STD. DWG. NO.
AT 11C

28-NOV-2016 DGN File:L:\Standard_Drawings\Imperial\2017 Approved\1-All Drawings\AT11C.dgn

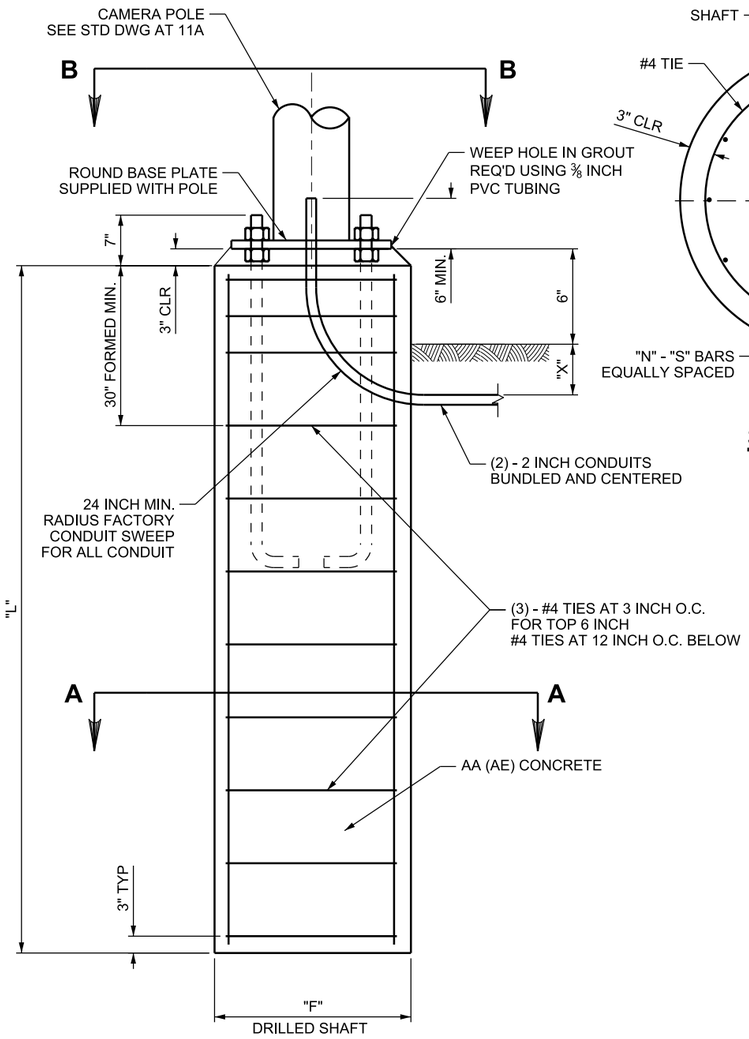

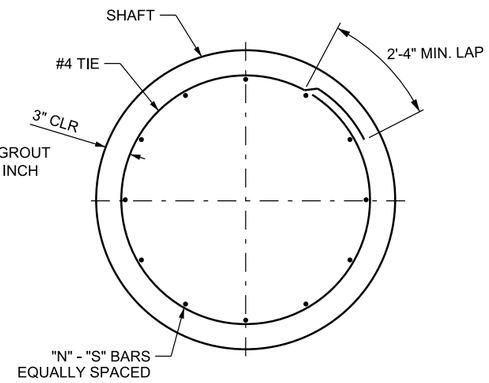

SECTION A-A

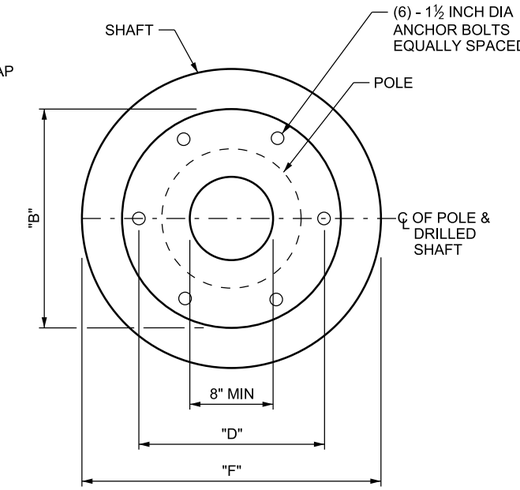

SECTION B-B
FOR 45 FT POLES

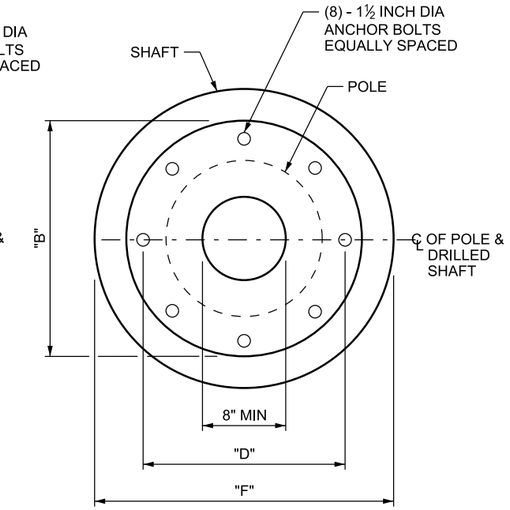

SECTION B-B
FOR 60 FT & 75 FT POLES

TABLE 1 - CONDUIT DEPTH "X"

18 INCH	IF ENTERING ADJACENT JUNCTION BOX
AS REQUIRED BY TABLE 2 OF STD DWG AT 6	IF NO ADJACENT JUNCTION BOX WITHIN 20 FEET OF POLE

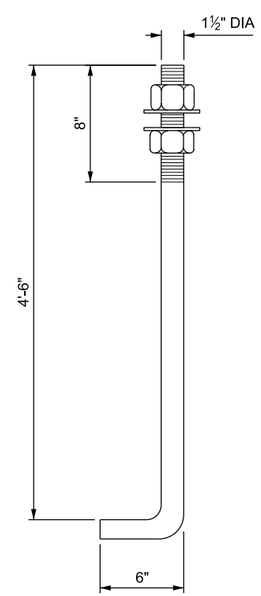

TABLE 2 - POLE FOUNDATION DIMENSIONS

DESCRIPTION	"B"	"D"	"F"	"L"	"N"	"S"
45 FT CAMERA POLES	26"	22"	36"	10'-0"	12	#6
60 FT CAMERA LOWERING POLE	28"	24"	42"	11'-6"	16	#6
75 FT CAMERA LOWERING POLE	32"	28"	42"	15'-0"	16	#6

(A) CCTV POLE FOUNDATION

(B) ANCHOR BOLT DETAIL

NOTES:

1. USE STEEL ANCHOR BOLT TEMPLATES, TOP AND BOTTOM.
2. REFER TO STANDARD SPECIFICATION 16530 GROUNDING REQUIREMENTS.

REVISIONS

NO.	DATE	APPR.	REMARKS

UTAH DEPARTMENT OF TRANSPORTATION
STANDARD DRAWINGS FOR ROAD AND BRIDGE CONSTRUCTION
SALT LAKE CITY, UTAH

RECOMMENDED FOR APPROVAL — JAN. 01, 2017 DATE
CHAIRMAN STANDARDS COMMITTEE APPROVED — JAN. 01, 2017 DATE
DEPUTY DIRECTOR

CCTV FOUNDATIONS FOR CCTV POLES
STANDARD DRAWING TITLE

STD. DWG. NO.
AT 12

28-NOV-2016 DGN File:L:\Standard_Drawings\Imperial\2017 Approved\1-AT Drawings\AT12.dgn

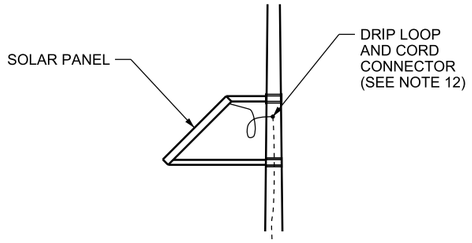

SECTION A-A

SEE NOTES 1 AND 2.

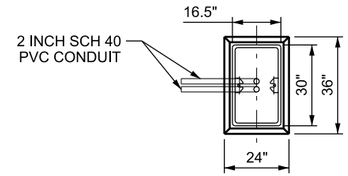

SECTION B-B

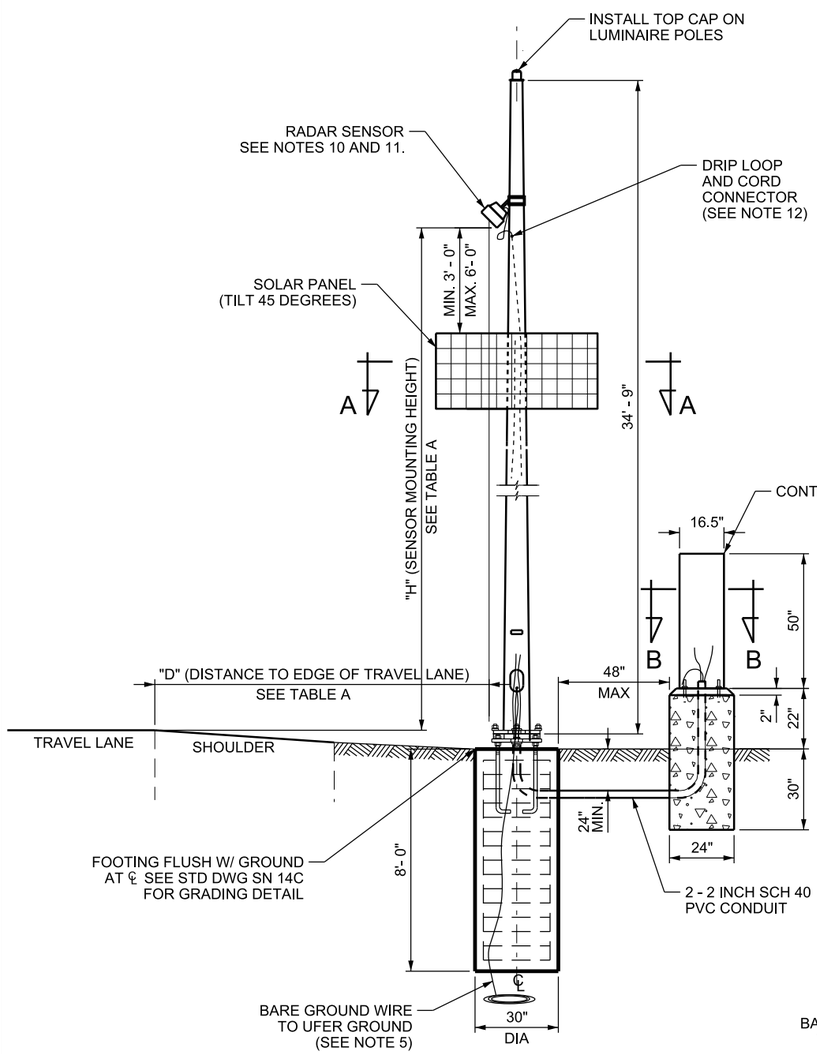

OPTIMAL POLE & RADAR SENSOR LOCATION (FT)	
POLE "D"	25 TO 35
SENSOR "H"	26 TO 30

TABLE A

SEE NOTE 7.

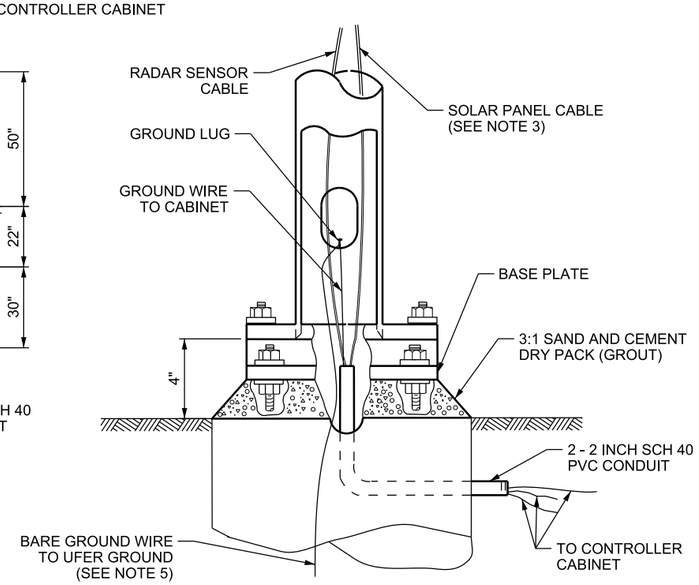

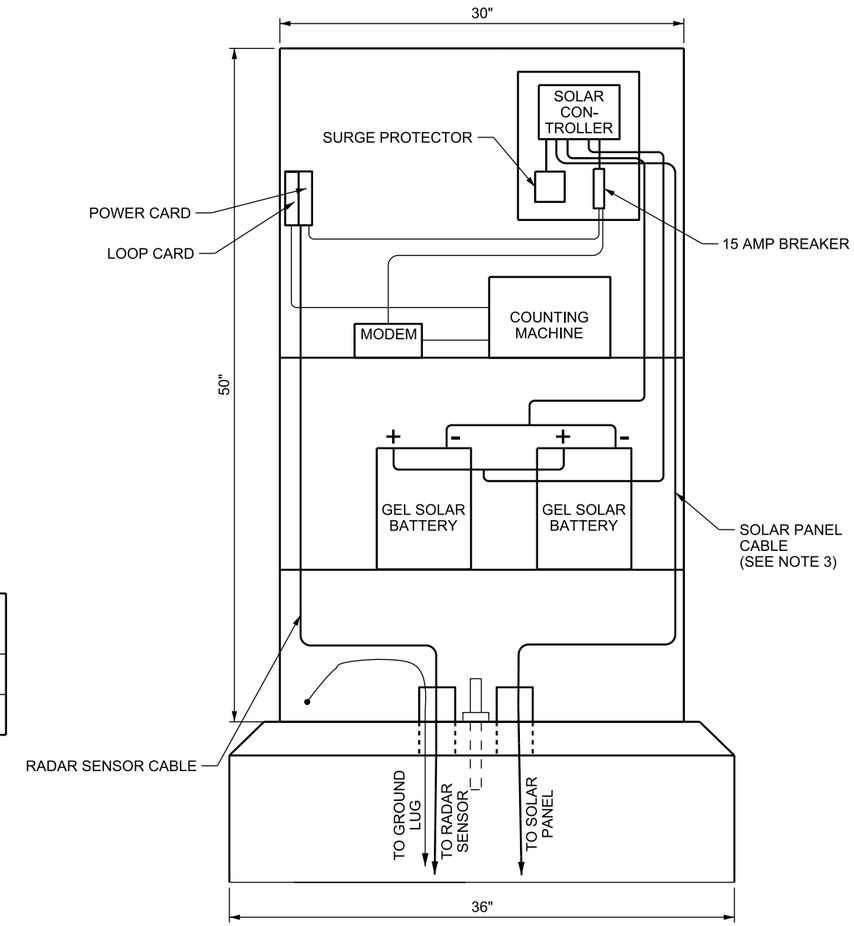

C CONTROLLER CABINET DETAIL

NOTES:

1. ORIENT SOLAR PANEL TO FACE DUE SOUTH.
2. ADJUST SOLAR PANEL MOUNTING HEIGHT FROM SENSOR DETECTION AREA IF RADAR SENSOR IS FACING SOUTH. CONTACT UDOT TRAFFIC COUNTING SHOP THROUGH THE ENGINEER PRIOR TO CONSTRUCTION.
3. USE 12 AWG TYPE TC THHN-THWN-2 CONDUCTORS, 90 C 600V SUN RESISTANT DIRECT BURY SOLAR PANEL CABLE.
4. USE EPOXY COATED REBAR AND CLASS AA(AE) CONCRETE FOR FOUNDATIONS.
5. USE CONCRETE ENCASED ELECTRODE PER NEC 250.52.A.3.2 FOR GROUNDING (UFER GROUND).
6. CONTACT UDOT TRAFFIC COUNTING SHOP AT (801) 965-4092 FOR COUNTING MACHINE SPECIFICATIONS.
7. VERIFY POLE AND CONTROLLER CABINET LOCATION AND RADAR SENSOR HEIGHT.
8. PROTECT WITH AN APPROVED STANDARD BARRIER OR GUARDRAIL SYSTEM WHEN POLE PLACEMENT IS WITHIN CLEAR ZONE.
9. STATE FURNISHED ITEMS: SLIP BASE POLE, ANCHOR BOLTS, RADAR SENSOR, SOLAR PANEL AND MOUNTING BRACKET, CONTROLLER CABINET AND ALL INTERNAL COMPONENTS EXCLUDING SOLAR PANEL CABLE.
10. AIM RADAR SENSOR DURING FINAL INSPECTION.
11. REFER TO STD DWG AT 11B, DETAIL B FOR MOUNT ASSEMBLY DETAILS.
12. SUPPLY AND INSTALL CORD CONNECTOR. SIZE APPROPRIATELY FOR WIRE.

A SOLAR TRAFFIC COUNTING STATION LAYOUT

REFER TO STD DWG SL 11 FOR FOUNDATION DETAILS.
REFER TO STD DWG SL 12 FOR SLIP BASE DETAILS.

B TYPICAL ELECTRICAL CONNECTIONS

REFER TO STD DWG SL 11 FOR ANCHOR BOLT DETAILS.
REFER TO STD DWG SL 12 FOR SLIP BASE DETAILS.

NO.	DATE	APPR.	REMARKS

UTAH DEPARTMENT OF TRANSPORTATION
STANDARD DRAWINGS FOR ROAD AND BRIDGE CONSTRUCTION
SALT LAKE CITY, UTAH

RECOMMENDED FOR APPROVAL — JAN. 10, 2017 DATE
CHAIRMAN STANDARDS COMMITTEE APPROVED — JAN. 10, 2017 DATE
DEPUTY DIRECTOR

SOLAR TRAFFIC COUNTING STATION
STANDARD DRAWING TITLE

STD. DWG. NO.
AT 14

DGN File:L:\Standard Drawings\Imperial\2017 Approved\1-AT Drawings\AT14.dgn
28-NOV-2016

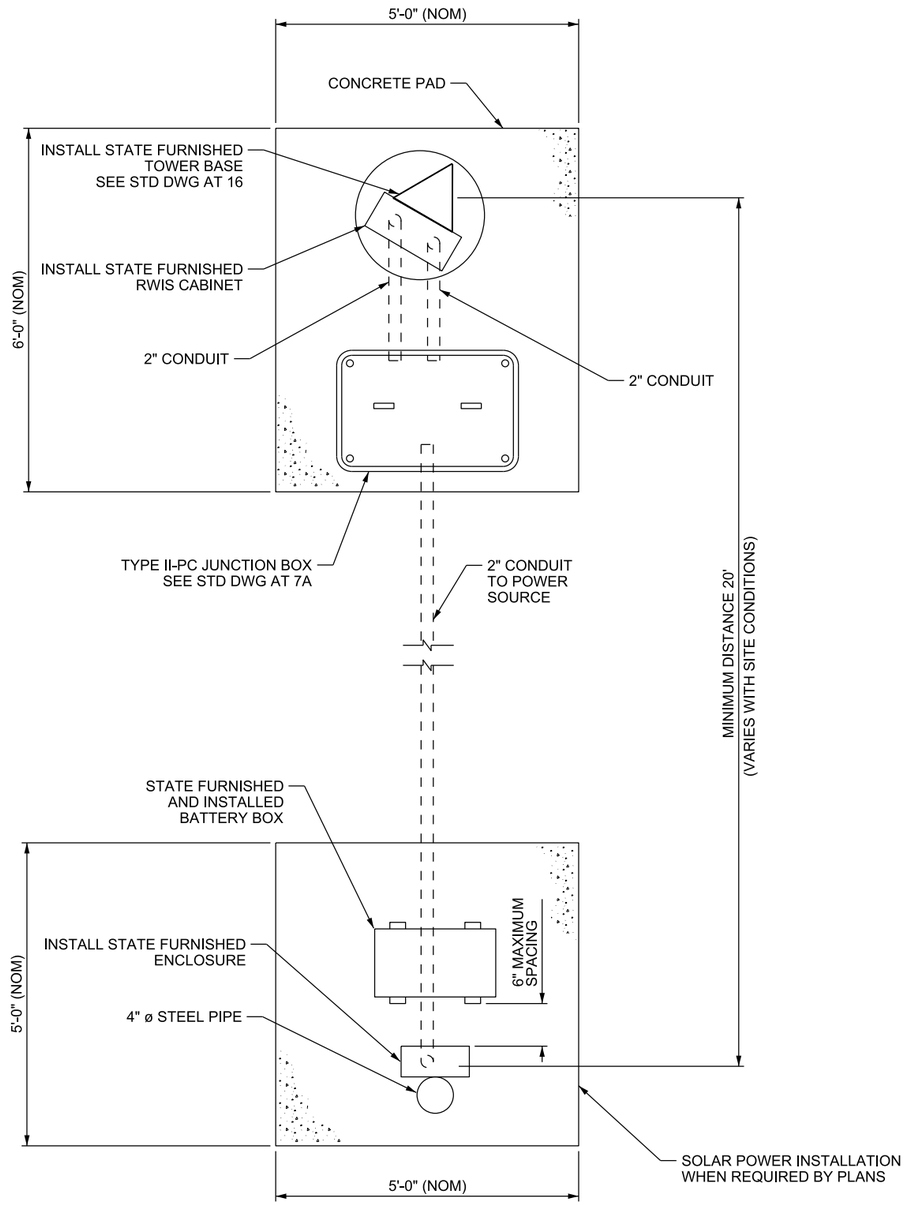

A RWIS SITE LAYOUT (PLAN VIEW)

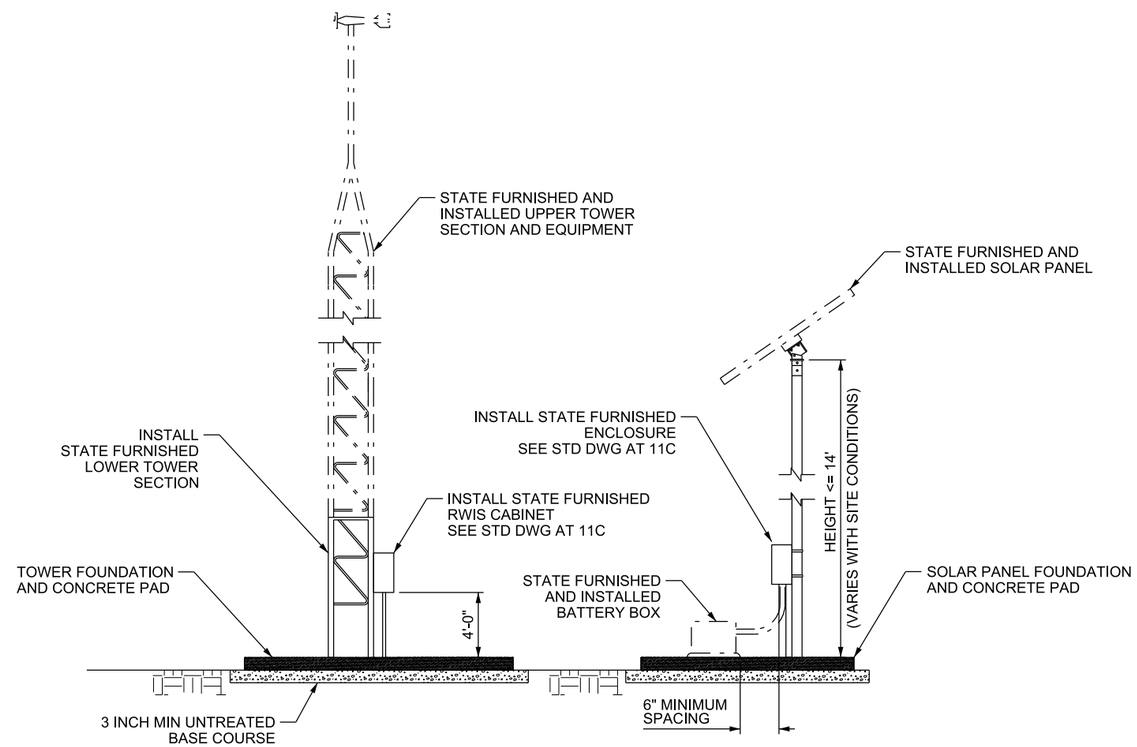

B RWIS TOWER AND SOLAR PANEL (PROFILE VIEW)

NOTES:

1. SITE SURVEY WITH UDOT WEATHER STAFF IS REQUIRED PRIOR TO DETERMINING FINAL SITE CONFIGURATION. CONTACT THE ENGINEER AT LEAST 5 BUSINESS DAYS IN ADVANCE OF DESIRED SURVEY DATE.
2. PAD DIMENSIONS ARE NOMINAL. SEE PLANS FOR SPECIFIC SITE VARIATIONS.

LEGEND

· - — - — FUTURE EQUIPMENT BY THE DEPARTMENT

NO.	DATE	APPR.	REMARKS

UTAH DEPARTMENT OF TRANSPORTATION
STANDARD DRAWINGS FOR ROAD AND BRIDGE CONSTRUCTION
SALT LAKE CITY, UTAH

RECOMMENDED FOR APPROVAL — JAN. 01, 2017 DATE
CHAIRMAN STANDARDS COMMITTEE APPROVED — JAN. 01, 2017 DATE
DEPUTY DIRECTOR

RWIS SITE AND FOUNDATION DETAILS
STANDARD DRAWING TITLE

STD. DWG. NO.
AT 15

DGN File:L:\Standard Drawings\Imperial\2017 Approved\1-All Drawings\AT15.dgn
28-NOV-2016

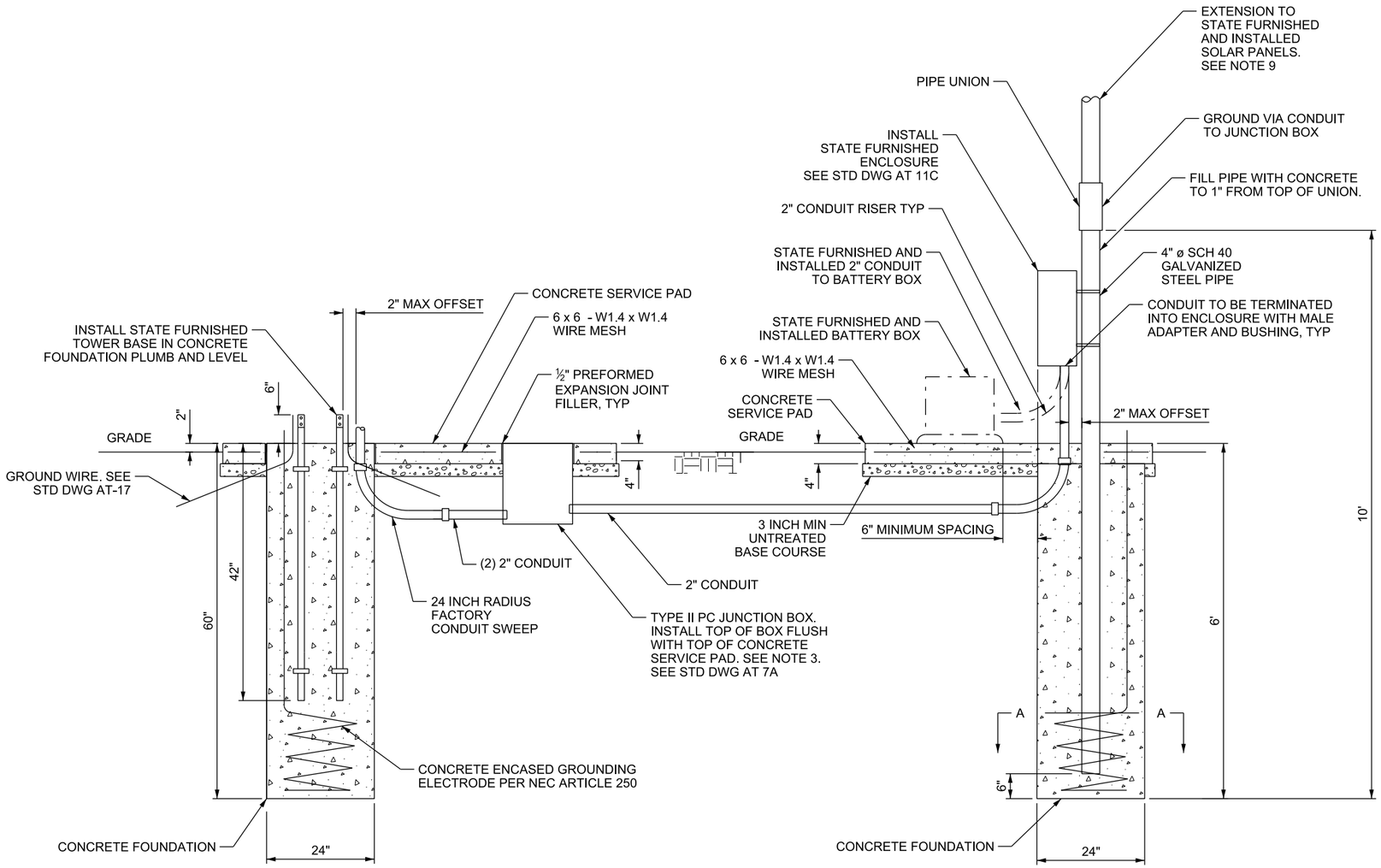

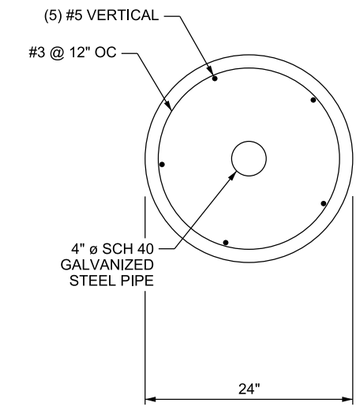

SECTION A-A

(B) RWIS TOWER BASE AND SERVICE PAD INSTALLATION DETAIL

LEGEND

— - – FUTURE EQUIPMENT BY THE DEPARTMENT

NOTES:

1. INSTALL POLYMER CONCRETE JUNCTION BOXES AS PER STD DWG AT 7.
2. USE CONCRETE, CLASS AA(AE) FOR FOUNDATIONS AND PADS.
3. LEVEL THE TOP OF THE TOWER BASE SECTION TO VERIFY A STRAIGHT AND PLUMB TOWER INSTALLATION. THE TOP OF THE TOWER BASE MUST BE 6 INCHES ABOVE THE CONCRETE PAD.
4. FINISH CONCRETE TO DRAIN WATER AWAY FROM EQUIPMENT.
5. SCORE A LINE FROM THE CORNER OF THE BOX TO THE CORNER OF THE CONCRETE FOR A CONTROL JOINT WHEN FINISHING CONCRETE .
6. TOWER BASE DIMENSION MAY VARY DEPENDING ON MANUFACTURER. VERIFY DIMENSIONS PRIOR TO INSTALLING FOUNDATION.
7. REFER TO STANDARD SPECIFICATION 16530 FOR CONCRETE ENCASED ELECTRODE REQUIREMENTS.
8. FOUNDATION AND SUPPORT CONFIGURATION IS ACCEPTABLE FOR A MAXIMUM 4 PANEL (2X2 CONFIGURATION) SOLAR ARRAY ONLY. REFER TO PLANS FOR INSTALLATION OF LARGER ARRAYS.

NO.	DATE	APPR.	REMARKS

UTAH DEPARTMENT OF TRANSPORTATION
STANDARD DRAWINGS FOR ROAD AND BRIDGE CONSTRUCTION
SALT LAKE CITY, UTAH

RECOMMENDED FOR APPROVAL — JAN. 01, 2017 DATE
CHAIRMAN STANDARDS COMMITTEE APPROVED — JAN. 01, 2017 DATE
DEPUTY DIRECTOR

RWIS TOWER BASE AND SERVICE PAD LAYOUT
STANDARD DRAWING TITLE

STD. DWG. NO.
AT 16

28-NOV-2016 DGN File:L:\Standard_Drawings\Imperial\2017 Approved\1-All Drawings\AT16.dgn

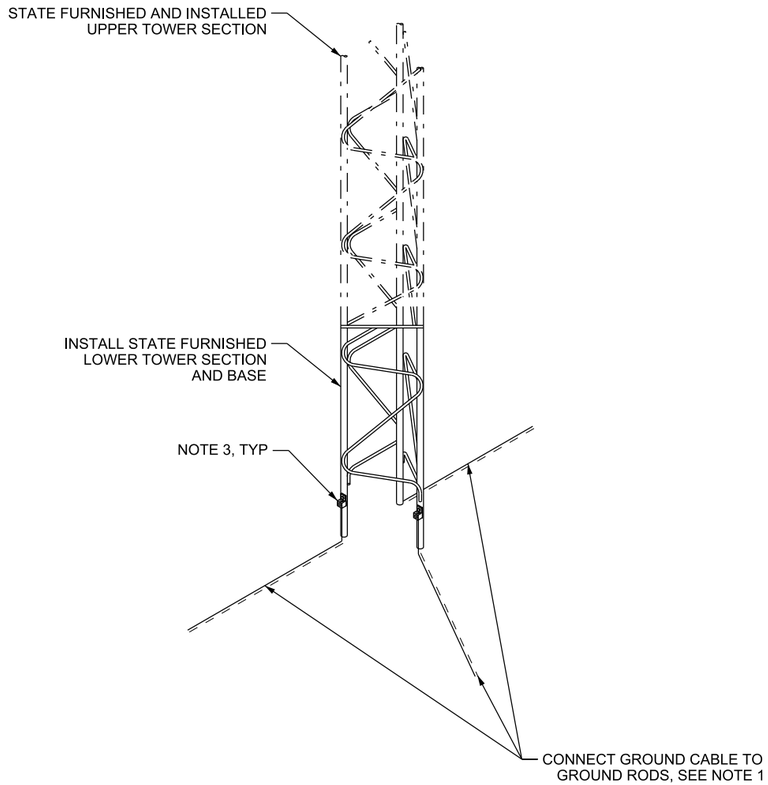

(A) GROUND CABLE TERMINATION DETAIL

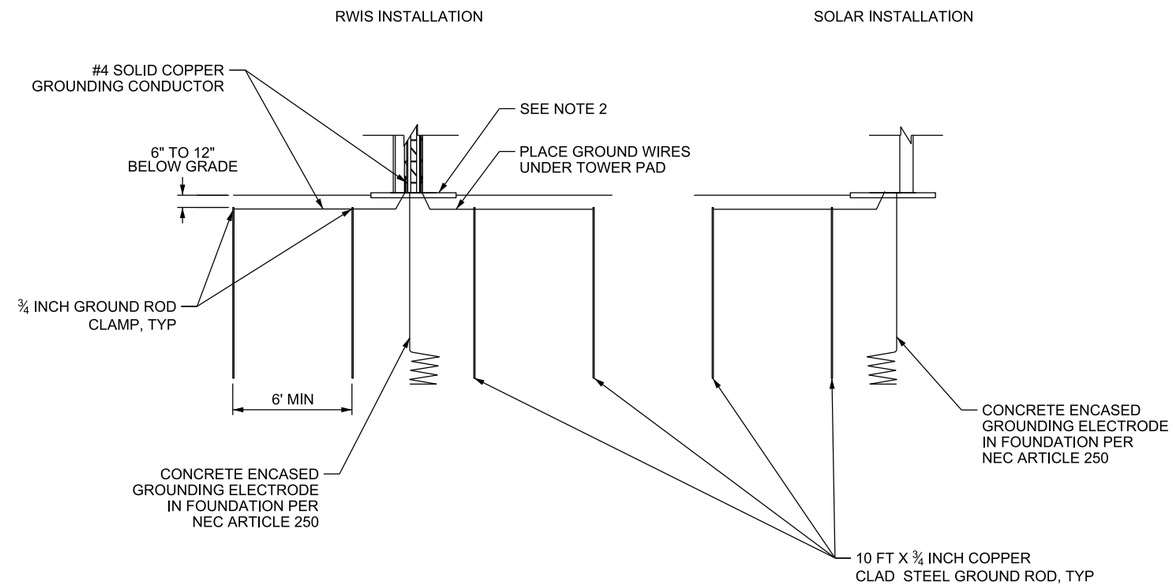

(B) GROUND CABLE TERMINATION DETAIL PROFILE VIEW

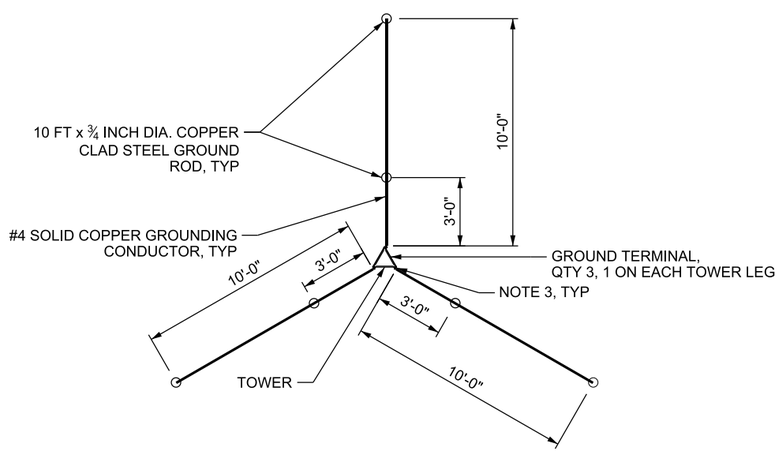

(C) GROUND CABLE TERMINATION DETAIL PLAN VIEW

NOTES:

1. INSTALL GROUND CABLES BEFORE PLACING CONCRETE PAD.
2. ANCHOR GROUND CABLES UNDER CONCRETE PAD WITH SUITABLE CLAMPS OR ANCHORS.
3. INSTALL GROUNDING CONDUCTOR AND RODS ON ALL THREE LEGS OF THE RWIS TOWER AND TO THE SOLAR POLE CONNECTED WITH APPROVED GROUND CLAMPS.
4. INSTALL CONCRETE ENCASED GROUNDING ELECTRODE TO A TOWER LEG AND SOLAR POLE WITH AN APPROVED GROUND CLAMP.

LEGEND

- — - — FUTURE EQUIPMENT BY THE DEPARTMENT

NO.	DATE	APPR.	REMARKS

UTAH DEPARTMENT OF TRANSPORTATION
STANDARD DRAWINGS FOR ROAD AND BRIDGE CONSTRUCTION
SALT LAKE CITY, UTAH

RECOMMENDED FOR APPROVAL — JAN. 01, 2017 DATE
CHAIRMAN STANDARDS COMMITTEE APPROVED — JAN. 01, 2017 DATE
DEPUTY DIRECTOR

RWIS GROUND ROD INSTALLATION AND TOWER GROUNDING
STANDARD DRAWING TITLE

STD. DWG. NO.
AT 17

28-NOV-2016 DGN File:L:\Standard_Drawings\Imperial\2017 Approved\1-All Drawings\AT17.dgn

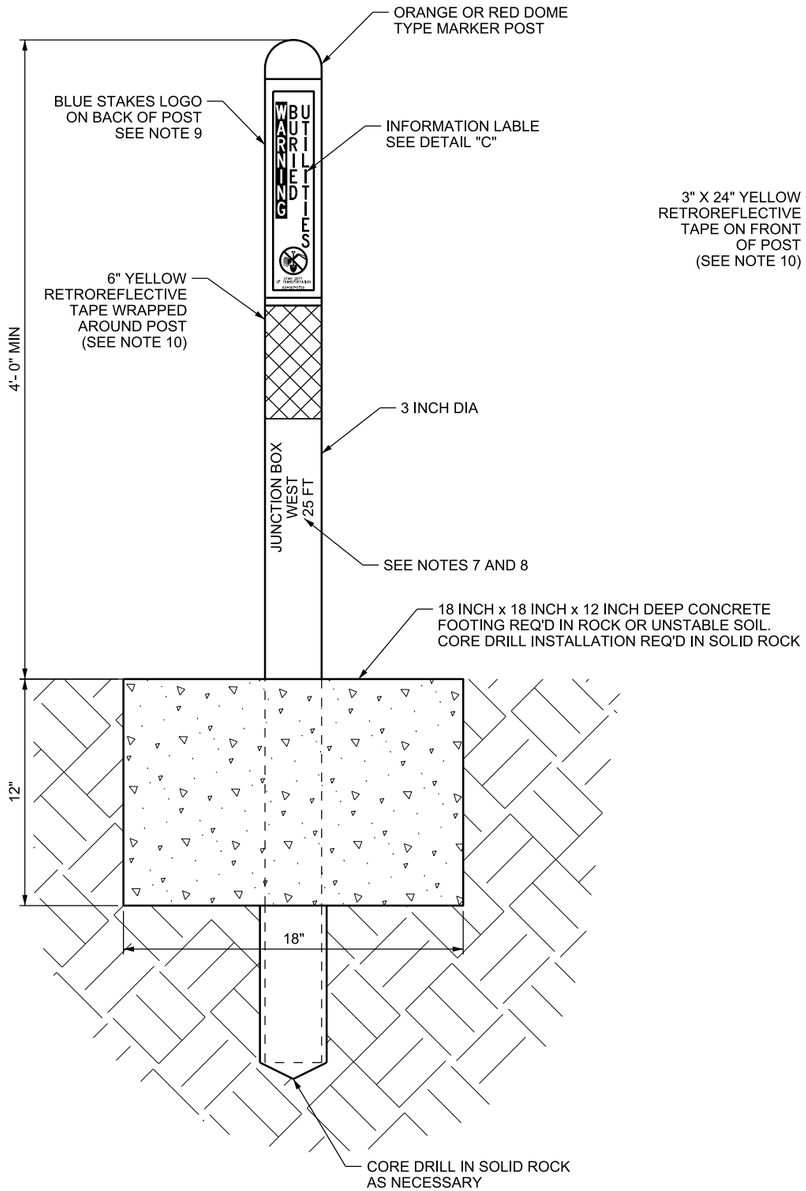

A UTILITY MARKER POST DOME TYPE

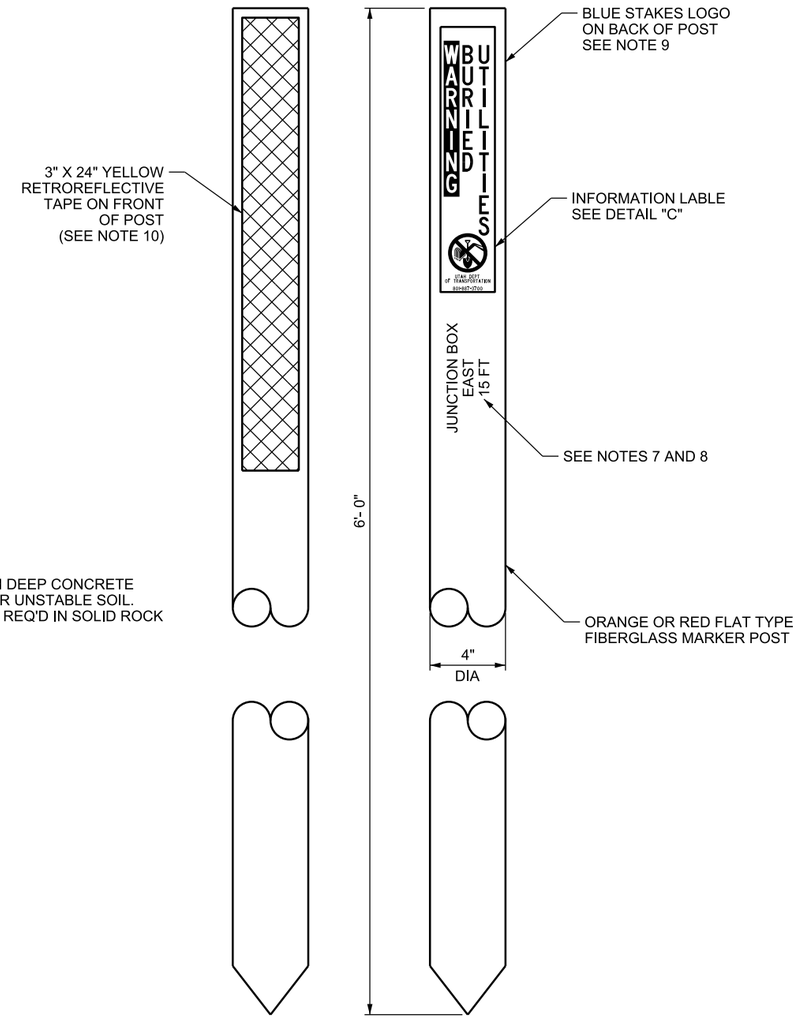

B UTILITY MARKER POST FLAT TYPE

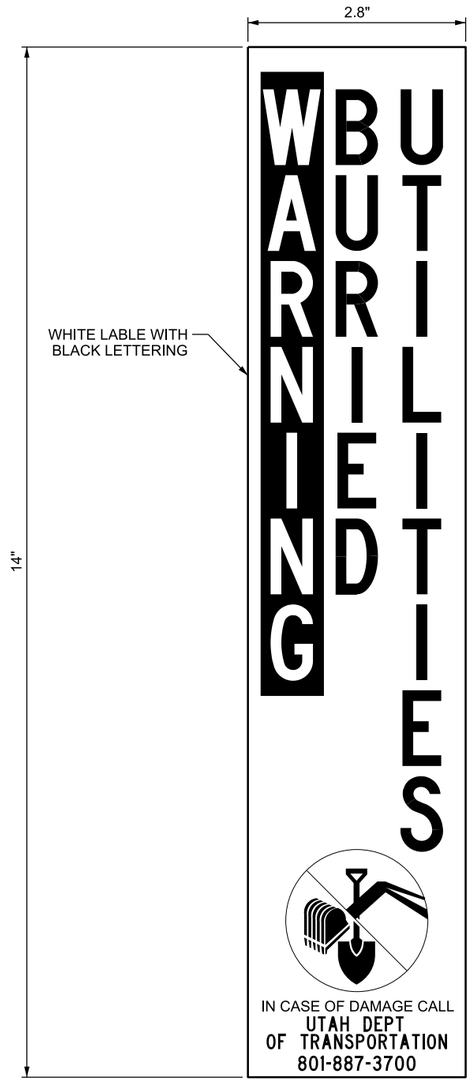

C LOCATION MARKER INFORMATION LABEL

NOTES:

1. FURNISH AND INSTALL FIBER GLASS UTILITY MARKER POSTS OR DOME-TYPE MARKER POSTS AS SPECIFIED IN THE PLANS. USE FLAT TYPE MARKER POSTS IN POUNDABLE SOIL. USE DOME TYPE MARKER POSTS IN UNSTABLE SOIL OR SOLID ROCK.
2. PROVIDE FIBERGLASS MARKER POSTS THAT ARE 4 INCH WIDE BY 6 FT TALL, WITH 4 FT EXPOSED AFTER INSTALLATION.
3. PROVIDE DOME-TYPE MARKER POSTS THAT ARE 3 INCH DIAMETER AND 6 FT LG, WITH 4 FT EXPOSED AFTER INSTALLATION.
4. PROVIDE MARKER POSTS THAT ARE ORANGE IN COLOR WHEN THE JUNCTION BOX/VAULT/CONDUIT SYSTEM CONTAINS COMMUNICATION CABLE.
5. PROVIDE MARKER POSTS THAT ARE RED IN COLOR WHEN THE JUNCTION BOX/VAULT/CONDUIT SYSTEM CONTAINS POWER CABLE.
6. DUPLICATE MARKER POSTS ARE NOT REQUIRED ON PARALLEL CONDUIT RUNS.
7. WRITE "JUNCTION BOX" OR "VAULT," OFFSET TO BOX OR VAULT, AND DIRECTION TO BOX ON MARKER POST WITH PAINT PEN OR PERMANENT MARKER PEN FOR POSTS MARKING BOXES OR VAULTS.
8. WRITE "CONDUIT" AND DIRECTION TO CONDUIT RUNNING LINE ON MARKER POST WITH PAINT PEN OR PERMANENT MARKER PEN FOR POSTS MARKING CONDUIT RUNS. DO NOT INCLUDE OFFSET TO CONDUIT.
9. PLACE LOGO STICKERS ON MARKER POST 3 INCHES FROM TOP.
10. FURNISH AND INSTALL YELLOW RETROREFLECTIVE TAPE, ASTM TYPE III MINIMUM, AT JUNCTION BOX LOCATIONS ONLY. VERIFY THAT RETROREFLECTIVE TAPE IS VISIBLE TO ON COMING TRAVEL LANE.

NO.	DATE	APPR.	REMARKS

UTAH DEPARTMENT OF TRANSPORTATION
STANDARD DRAWINGS FOR ROAD AND BRIDGE CONSTRUCTION
SALT LAKE CITY, UTAH

RECOMMENDED FOR APPROVAL — JAN. 10, 2017 DATE
CHAIRMAN STANDARDS COMMITTEE APPROVED — JAN. 10, 2017 DATE
DEPUTY DIRECTOR

UTILITY MARKER POST DETAILS
STANDARD DRAWING TITLE

STD. DWG. NO.
AT 18

DGN File: L:\Standard Drawings\Imperial\2017 Approved\1-All Drawings\AT18.dgn
28-NOV-2016

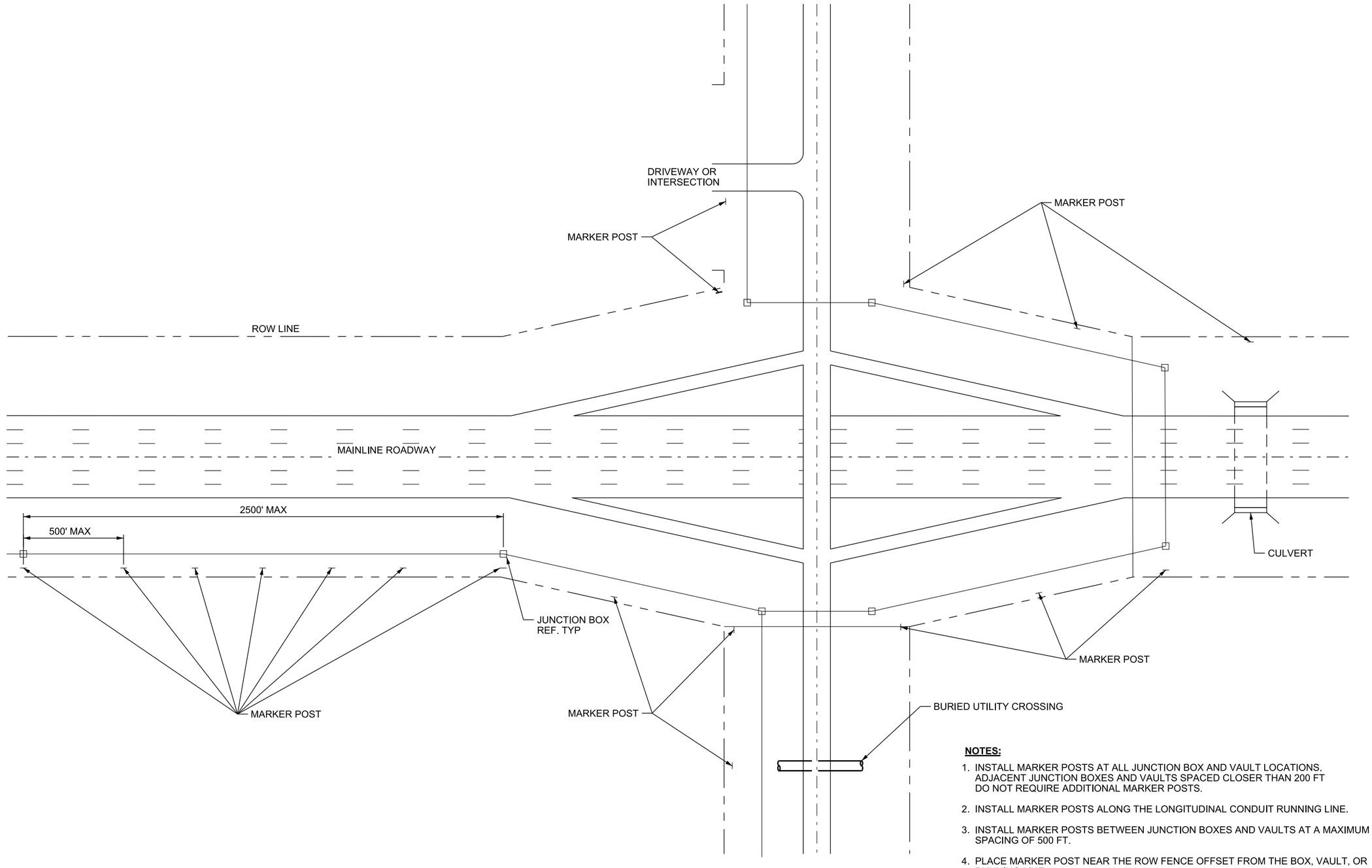

NOTES:

1. INSTALL MARKER POSTS AT ALL JUNCTION BOX AND VAULT LOCATIONS. ADJACENT JUNCTION BOXES AND VAULTS SPACED CLOSER THAN 200 FT DO NOT REQUIRE ADDITIONAL MARKER POSTS.
2. INSTALL MARKER POSTS ALONG THE LONGITUDINAL CONDUIT RUNNING LINE.
3. INSTALL MARKER POSTS BETWEEN JUNCTION BOXES AND VAULTS AT A MAXIMUM SPACING OF 500 FT.
4. PLACE MARKER POST NEAR THE ROW FENCE OFFSET FROM THE BOX, VAULT, OR RUNNING LINE.
5. INSTALL A MARKER POST NEAR THE ROW LINE AT ALL ROADWAY OR DRIVEWAY CROSSING LOCATIONS.
6. INSTALL A MARKER POST NEAR THE ROW LINE AT ALL UTILITY, CONDUIT, PIPE, CULVERT AND CANAL CROSSINGS.
7. USE MARKER POSTS ON ALL CONTROLLED ACCESS RIGHT OF WAY, INCLUDING INTERSTATE, STATE AND RURAL TYPE ROADS.

NO.	DATE	APPR.	REMARKS

UTAH DEPARTMENT OF TRANSPORTATION
STANDARD DRAWINGS FOR ROAD AND BRIDGE CONSTRUCTION
SALT LAKE CITY, UTAH

RECOMMENDED FOR APPROVAL — JAN. 10, 2017 DATE
CHAIRMAN STANDARDS COMMITTEE APPROVED — JAN. 10, 2017 DATE
DEPUTY DIRECTOR

UTILITY MARKER POST LOCATIONS
STANDARD DRAWING TITLE

STD. DWG. NO.
AT 19

DGN File: L:\Standard Drawings\Imperial\2017 Approved\1-All Drawings\AT19.dgn
28-NOV-2016

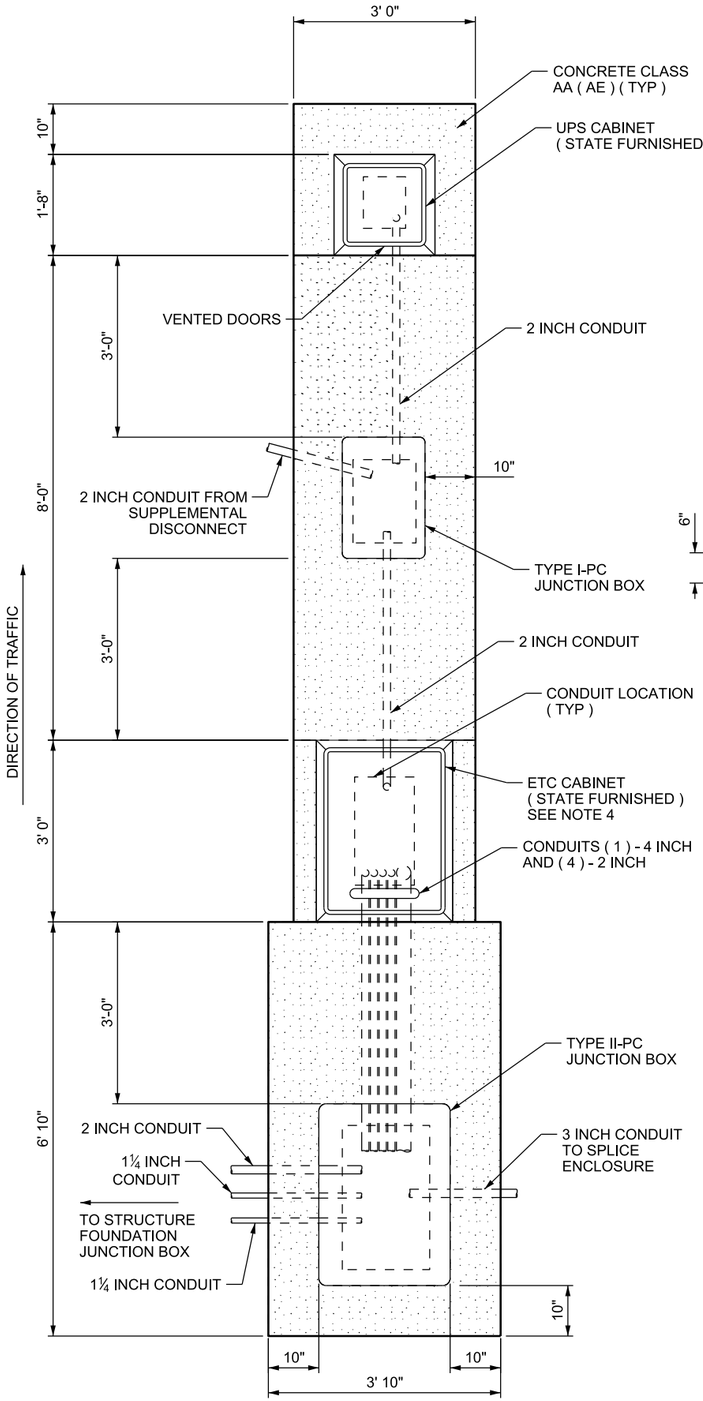

PLAN VIEW

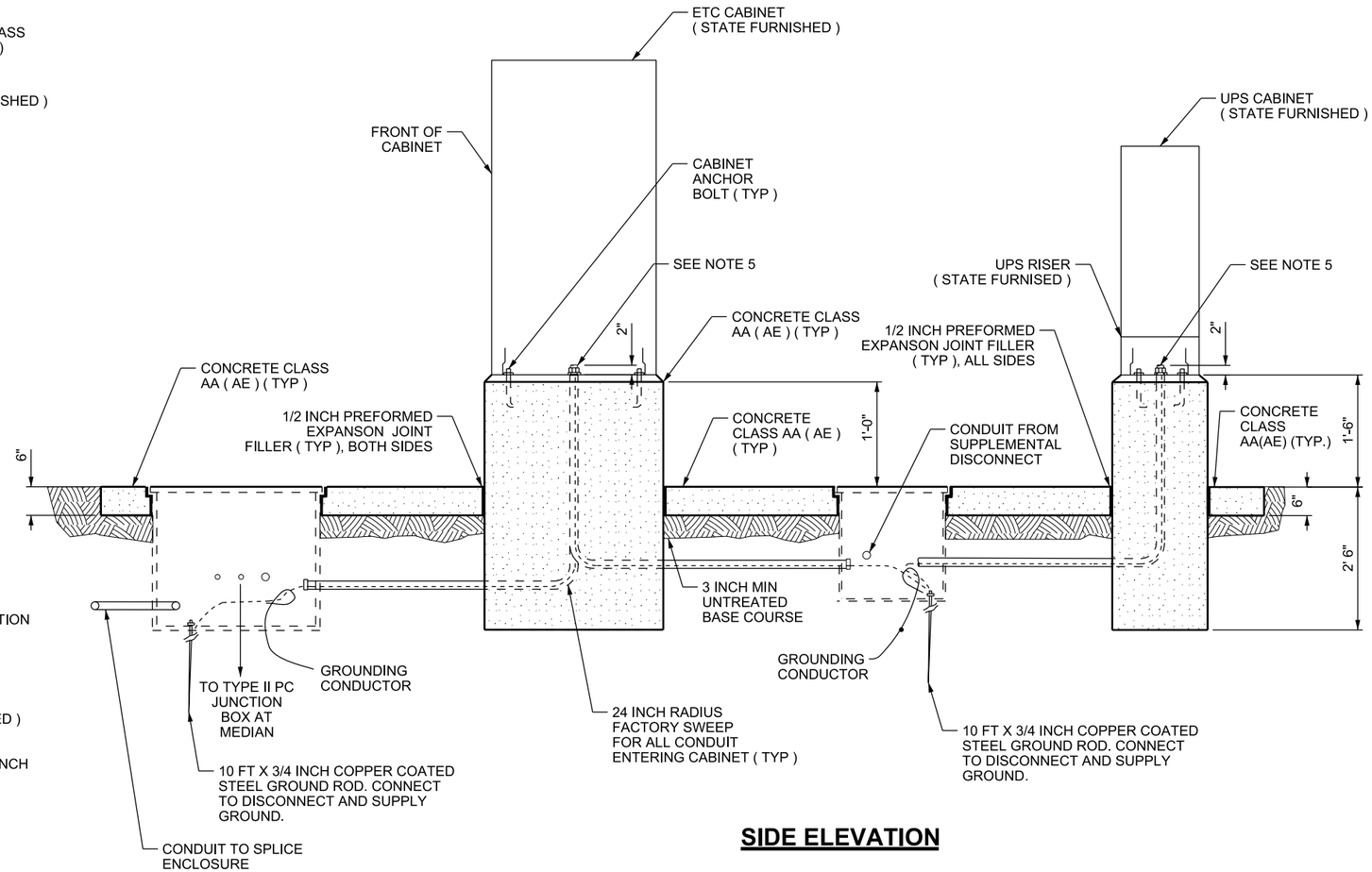

SIDE ELEVATION

(A) ECT CABINET

NOTES:

1. REFER TO STD DWG AT 9 FOR CABINET DISCONNECT AND TRANSFORMER DETAIL.
2. FIELD VERIFY CONDUIT LAYOUT IN FOUNDATION TO AVOID CONFLICT WITH CABINETS.
3. REFER TO STANDARD SPECIFICATIONS FOR ANCHOR BOLT INFORMATION.
4. DRAWER IN ETC CABINET TO FACE MOST NORTHERN SIDE.
5. INSTALL COARSE STEEL WOOL IN ALL CONDUIT TERMINATED IN CABINETS (NO DUCT SEAL).

NO.	DATE	APPR.	REMARKS

UTAH DEPARTMENT OF TRANSPORTATION
STANDARD DRAWINGS FOR ROAD AND BRIDGE CONSTRUCTION
SALT LAKE CITY, UTAH

RECOMMENDED FOR APPROVAL — JAN. 01, 2017 DATE
CHAIRMAN STANDARDS COMMITTEE APPROVED — JAN. 01, 2017 DATE
DEPUTY DIRECTOR — DATE

STANDARD DRAWING TITLE
ELECTRONIC TOLL LANES CONTROL SYSTEMS CABINET LAYOUT

STD. DWG. NO.
AT 20

DGN File: L:\Standard Drawings\Imperial\2017 Approved\1-All Drawings\AT20.dgn
28-NOV-2016

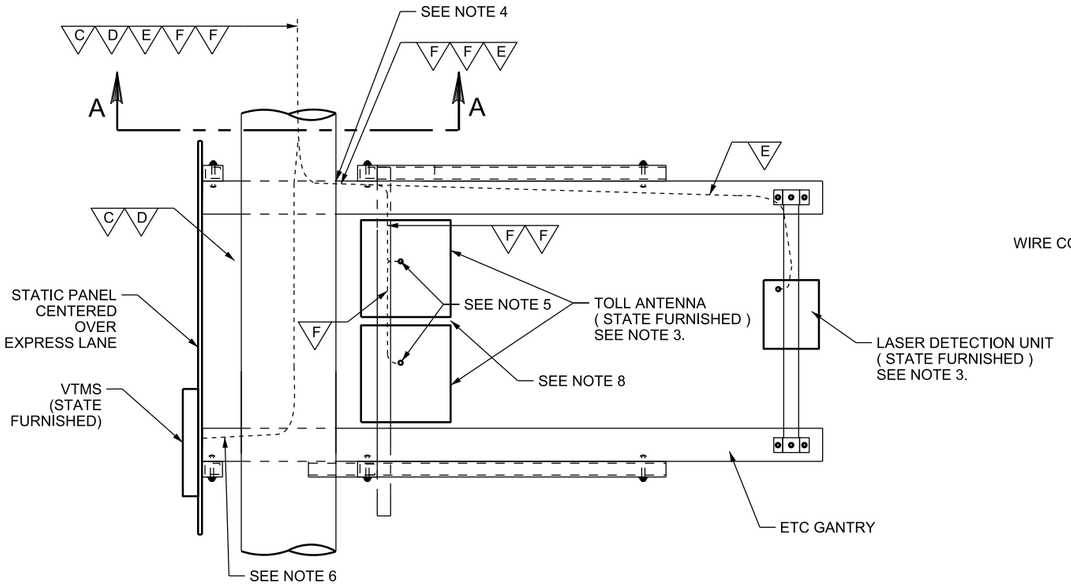

(A) ETC GANTRY EQUIPMENT LOCATION DETAIL

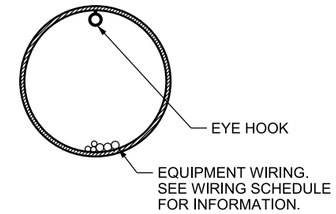

SECTION A-A

WIRE CONFIGURATION THROUGH STRUCTURE TO ETC EQUIPMENT / VTMS

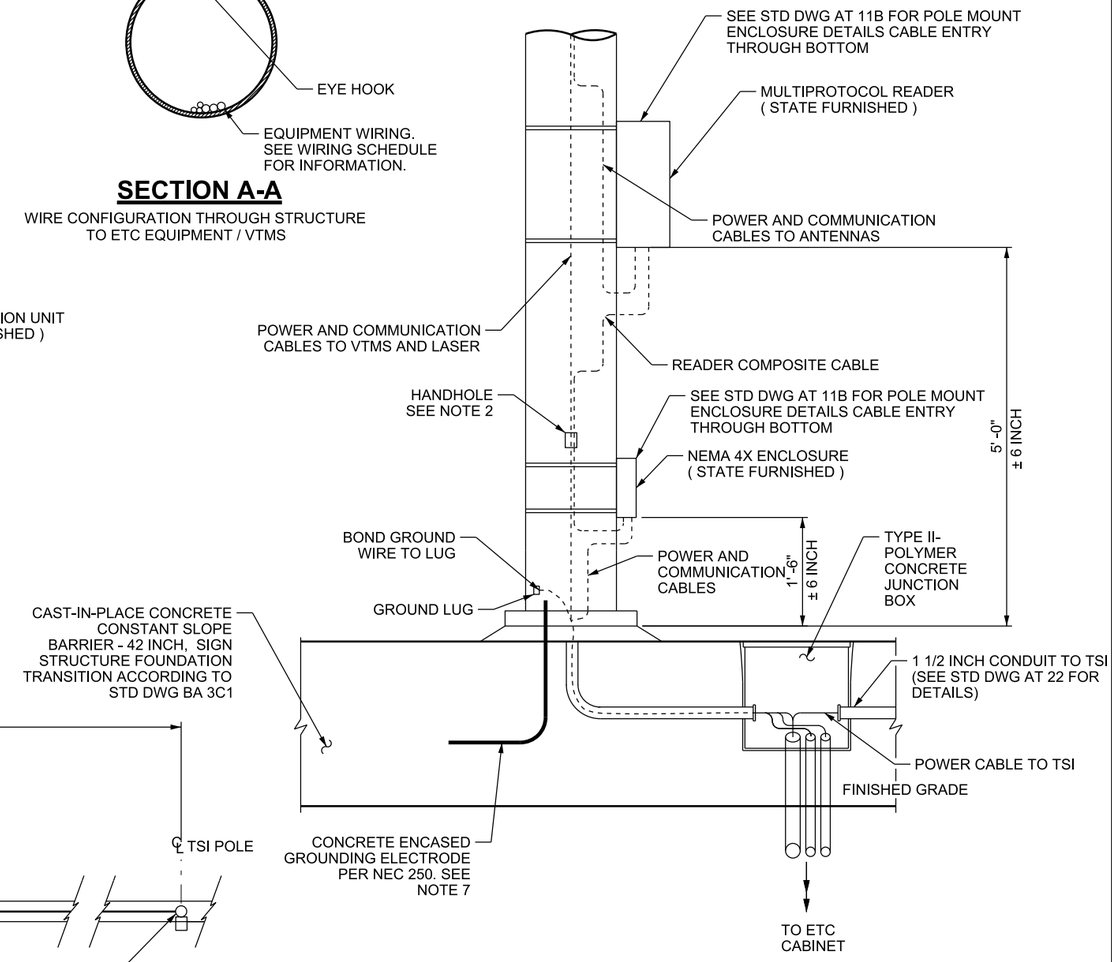

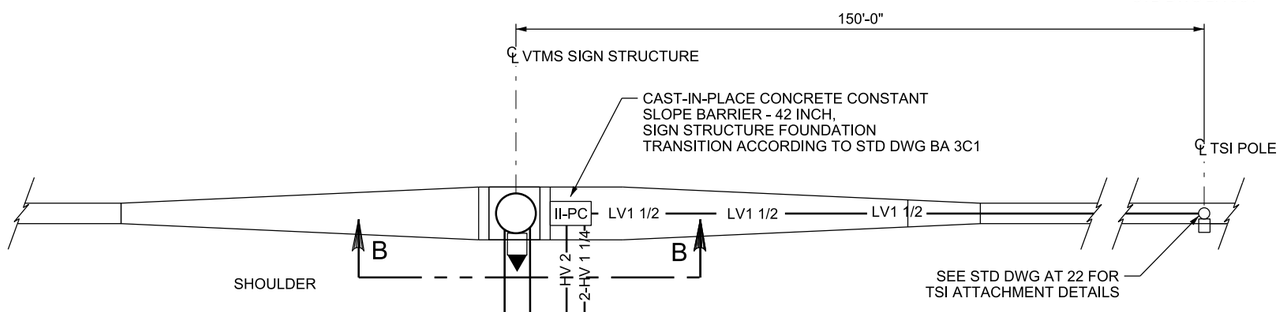

SECTION B-B

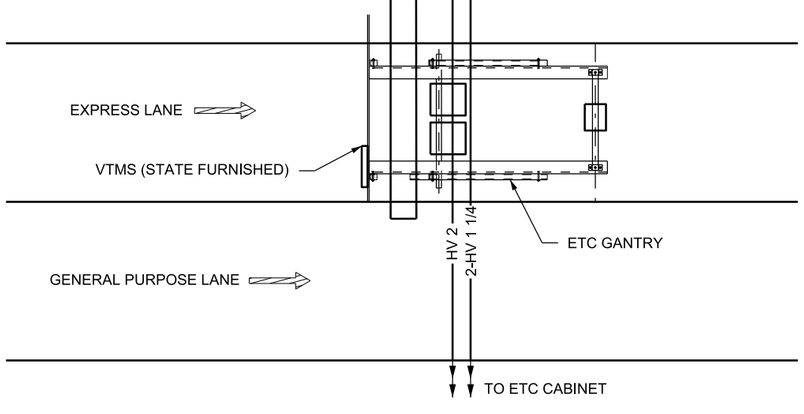

(C) ETC PLAZA DETAIL

WIRE SCHEDULE;

NO.	DESCRIPTION
A	2 - #10 CONDUCTORS, 1 - #10 EQUIPMENT GROUND.
B	4 - #16 CONDUCTORS (TSI 2A-1604).
C	IMSA 20-1 14-3 AWG CABLE.
D	OUTDOOR RATED CAT-5E CABLE.
E	LASER 2-CABLE BUNDLE. (STATE FURNISHED)
F	LMR 400 CABLE.
G	READER COMPOSITE CABLE (STATE FURNISHED)
H	6 SMFO PRETERMINATED DROP CABLE.

NOTES;

1. SEE STRUCTURE DRAWINGS FOR ETC GANTRY DIMENSIONS AND DETAILS.
2. PLACE NEMA 4X ENCLOSURE TO AVOID CONFLICT WITH HANDHOLE.
3. SEE STD DWG AT 22 FOR GANTRY EQUIPMENT ATTACHMENT DETAILS.
4. USE CABLE EXIT STRAIN RELIEF, 1½ INCH WITH SOLID INSERT OR EQUIVALENT. DRILL HOLES IN INSERT TO CABLE SIZE.
5. USE CABLE ENTRY STRAIN RELIEF, 5 INCH HEAT SHRINK TUBING WITH GLUE. APPLY WITH HEAT GUN ONLY.
6. USE ¾ INCH LIQUID TIGHT FLEXIBLE METAL CONDUIT, TYPE LFMC BETWEEN STRUCTURE AND VTMS.
7. REFER TO STANDARD SPECIFICATION 13551 FOR CONCRETE ENCASED GROUNDING ELECTRODE REQUIREMENTS.
8. GAP BETWEEN ANTENNAS IS 6 INCHES.

NO.	DATE	APPR.	REMARKS

UTAH DEPARTMENT OF TRANSPORTATION
STANDARD DRAWINGS FOR ROAD AND BRIDGE CONSTRUCTION
SALT LAKE CITY, UTAH

RECOMMENDED FOR APPROVAL — JAN. 01, 2017 DATE
CHAIRMAN STANDARDS COMMITTEE APPROVED — JAN. 01, 2017 DATE
DEPUTY DIRECTOR

ELECTRONIC TOLL LANES CONTROL SYSTEMS ETC GANTRY

STANDARD DRAWING TITLE

STD. DWG. NO.
AT 21

28-NOV-2016 DGN File:L:\Standard_Drawings\Imperial\2017 Approved\1-All Drawings\AT21.dgn

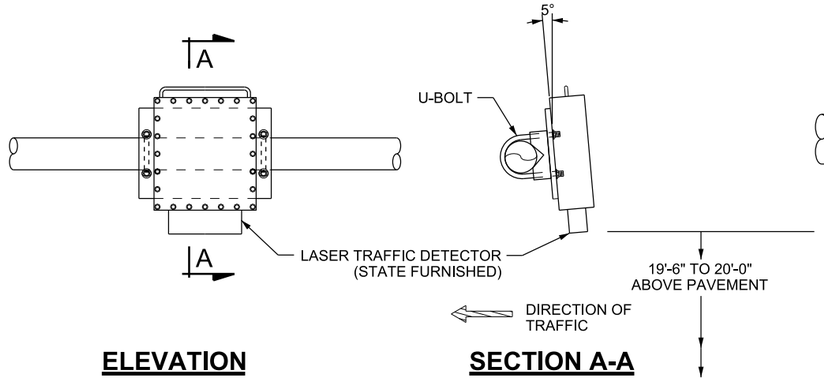

(A) LASER ATTACHMENT DETAIL

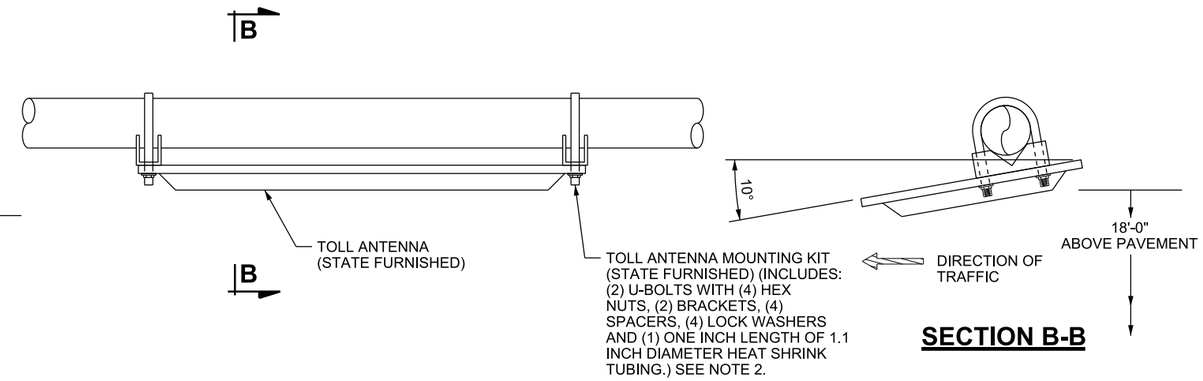

(B) TOLL ANTENNA ATTACHMENT DETAIL

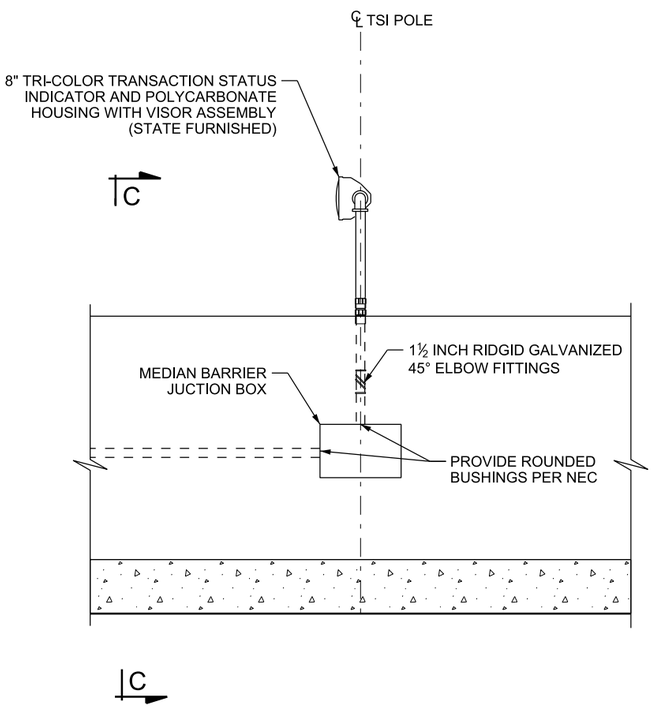

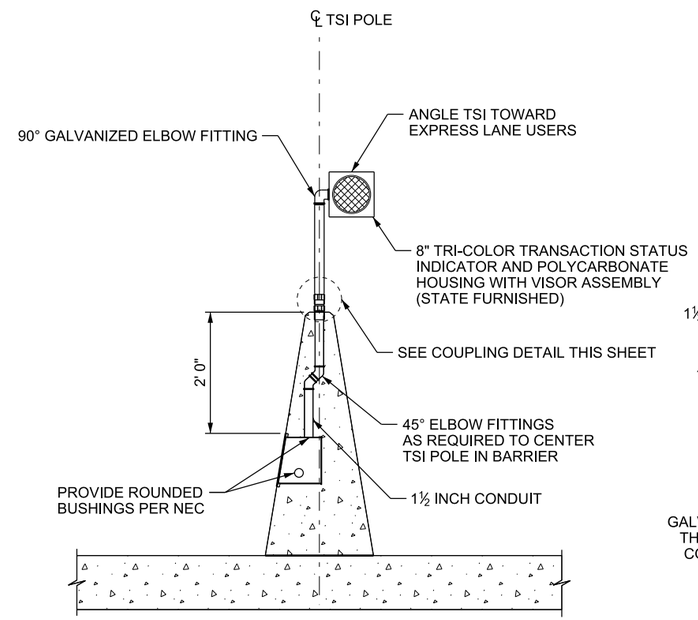

SECTION C-C

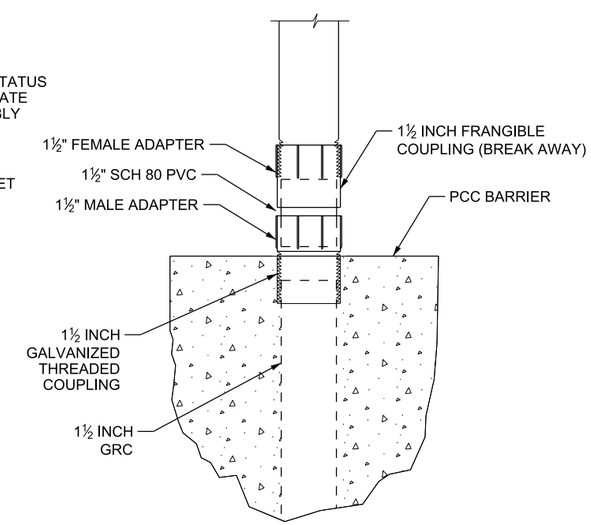

COUPLING DETAIL

(C) TSI ATTACHMENT DETAIL AND MEDIAN BARRIER JUNCTION BOX

NOTES:

1. USE AN INCLINOMETER OR ANGLE FINDER TO VERIFY THE ANTENNA AND LASER MOUNTING ANGLES.
2. TIGHTEN NUTS WITH A TORQUE WRENCH TO 50 FT-LB.
3. REFER TO STD DWG AT 21 FOR TSI LOCATION.
4. REFER TO STD DWG AT 24 FOR LASER WIRING DIAGRAM.

NO.	DATE	APPR.	REMARKS

UTAH DEPARTMENT OF TRANSPORTATION
STANDARD DRAWINGS FOR ROAD AND BRIDGE CONSTRUCTION
SALT LAKE CITY, UTAH

RECOMMENDED FOR APPROVAL — JAN. 01, 2017 DATE
CHAIRMAN STANDARDS COMMITTEE APPROVED — JAN. 01, 2017 DATE
DEPUTY DIRECTOR

STANDARD DRAWING TITLE
ATTACHMENT DETAILS

STD. DWG. NO.
AT 22

DGN File: L:\Standard Drawings\Imperial\2017 Approved\1-All Drawings\AT22.dgn
28-NOV-2016

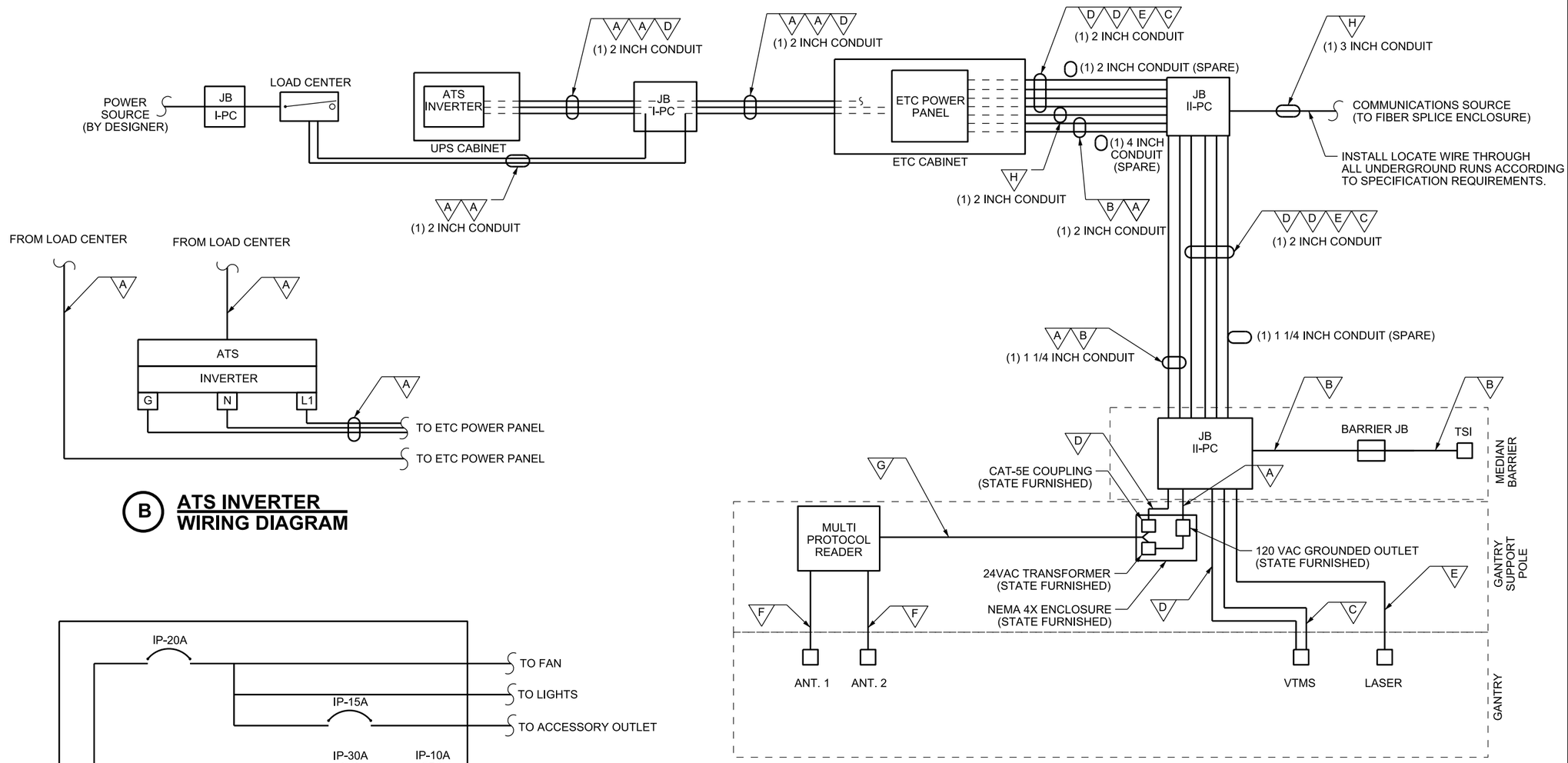

A ETC EQUIPMENT WIRING DIAGRAM

B ATS INVERTER WIRING DIAGRAM

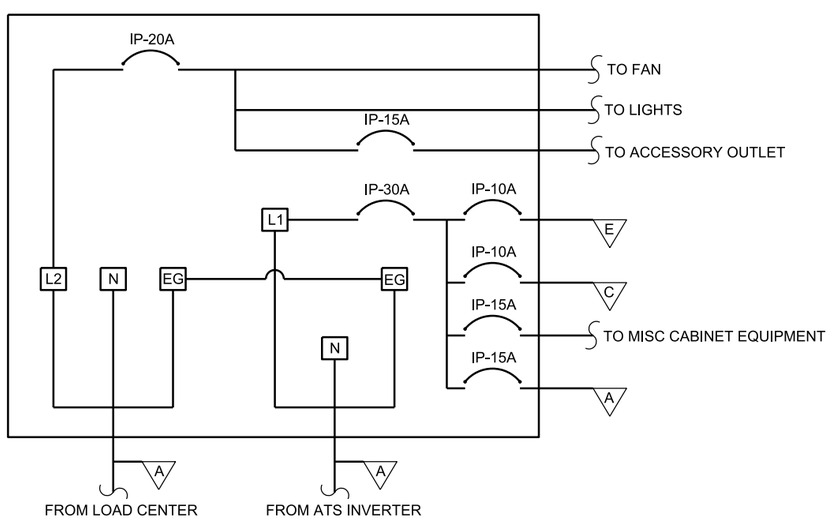

C ETC POWER PANEL WIRING DIAGRAM

WIRE SCHEDULE:

NO.	DESCRIPTION
A	2 - #10 AWG CONDUCTORS, 1 - #10 AWG EQUIPMENT GROUND.
B	4 - #16 CONDUCTORS (TSI 2A-1604).
C	IMSA 20-1 14 - 3 AWG CABLE.
D	OUTDOOR RATED CAT-5E CABLE.
E	LASER 2-CABLE BUNDLE. (STATE FURNISHED)
F	LMR 400 CABLE.
G	READER COMPOSITE CABLE (STATE FURNISHED)
H	6 SMFO PRETERMINATED DROP CABLE.

NO. | DATE | APPR. | REMARKS

UTAH DEPARTMENT OF TRANSPORTATION
STANDARD DRAWINGS FOR ROAD AND BRIDGE CONSTRUCTION
SALT LAKE CITY, UTAH

RECOMMENDED FOR APPROVAL — JAN. 01, 2017 DATE
CHAIRMAN STANDARDS COMMITTEE APPROVED — JAN. 01, 2017 DATE
DEPUTY DIRECTOR

STANDARD DRAWING TITLE
ETC EQUIPMENT WIRING DIAGRAM

STD. DWG. NO.
AT 23

28-NOV-2016 DGN File:L:\Standard Drawings\Imperial\2017 Approved\1-All Drawings\AT23.dgn

OSI AUTOSENSE 618 POWER WIRING DIAGRAM TO THE ROADSIDE CABINET

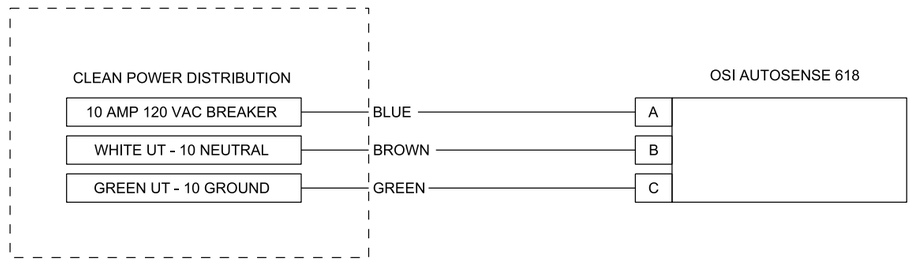

OSI AUTOSENSE 618 COMMUNICATION WIRING DIAGRAM TO THE ROADSIDE CABINET

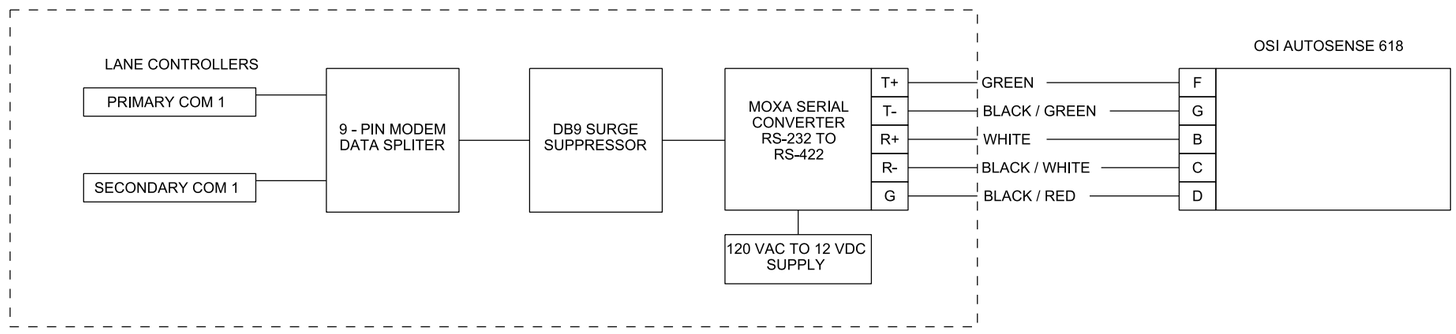

(A) OSI AUTOSENSE 618 WIRING

NO.	DATE	APPR.	REMARKS

UTAH DEPARTMENT OF TRANSPORTATION
STANDARD DRAWINGS FOR ROAD AND BRIDGE CONSTRUCTION
SALT LAKE CITY, UTAH

RECOMMENDED FOR APPROVAL — JAN. 01, 2017 DATE
CHAIRMAN STANDARDS COMMITTEE APPROVED — JAN. 01, 2017 DATE
DEPUTY DIRECTOR

ETC - OSI LASER SYSTEM WIRING DIAGRAM
STANDARD DRAWING TITLE

STD. DWG. NO.
AT 24

28-NOV-2016 DGN File:L:\Standard_Drawings\Imperial\2017 Approved\1-All Drawings\AT24.dgn

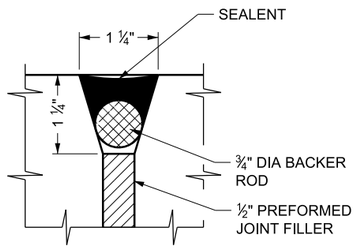

TYPE 1

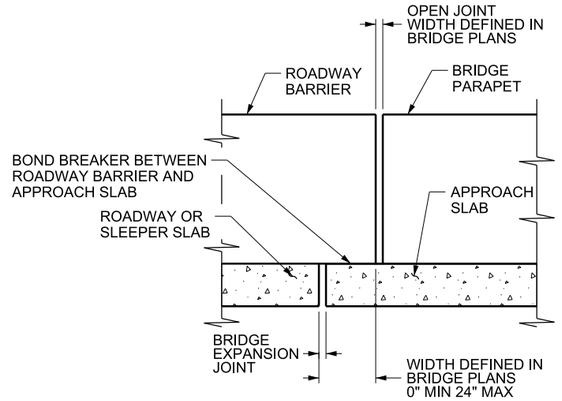

TYPE 2

EXPANSION JOINT DETAILS

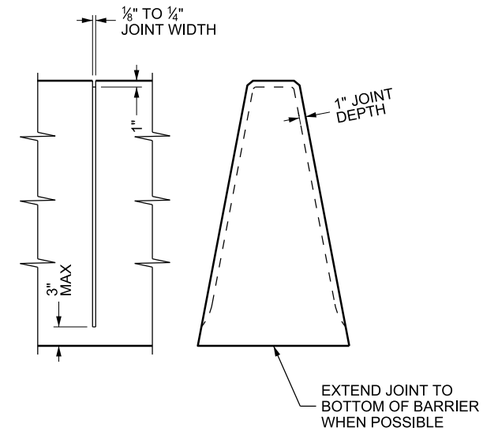

ELEVATION **END VIEW**

SAW CUT CONTRACTION JOINT

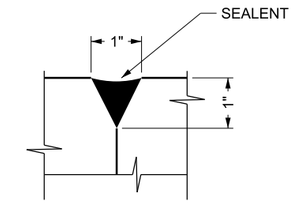

FORMED CONTRACTION JOINT

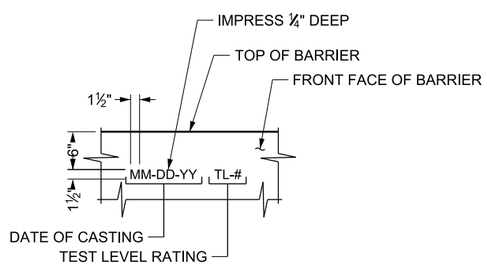

CAST-IN-PLACE BARRIER MARKING DETAIL

PLACE AT BEGINNING, END, AND AT 1,000-FT INTERVALS

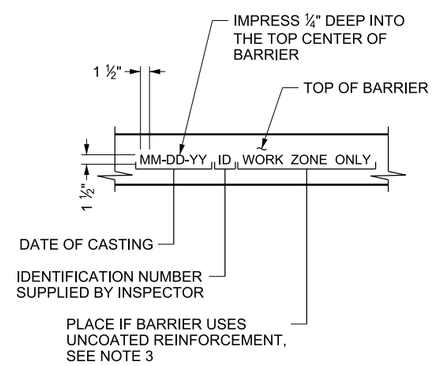

PRECAST BARRIER MARKING DETAIL

LEGEND

A.S. = AS SHOWN
CIP = CAST-IN-PLACE
DIA = DIAMETER
EQ = EQUAL
R = RADIUS
SPA = SPACES

DESIGN-ONLY NOTES:

A. PAVEMENT OVERLAY LIMITATIONS - EFFECTIVE BARRIER IS MEASURED FROM TOP OF PAVEMENT TO TOP OF BARRIER. DO NOT PLACE PAVEMENT OVERLAY THAT REDUCES EFFECTIVE BARRIER TO LESS THAN THE EFFECTIVE BARRIER LIMIT:

A1. 32 INCH NEW JERSEY BARRIER: DO NOT OVERLAY MATERIAL PAST THE FIRST BREAK POINT OF BARRIER. FIRST BREAK POINT IS 3 INCHES ABOVE BOTTOM OF BARRIER. EFFECTIVE BARRIER LIMIT IS 29 INCHES.

A2. 42 INCH CONSTANT SLOPE BARRIER: EFFECTIVE BARRIER LIMIT IS 36 INCHES

A3. 54 INCH CONSTANT SLOPE BARRIER: EFFECTIVE BARRIER LIMIT IS 48 INCHES.

B. ALL CONCRETE BARRIER IS RATED TEST LEVEL 3 (TL-3) PER NCHRP REPORT 350 UNLESS NOTED OTHERWISE.

C. DESIGN OFF-RAMP BARRIER AND CRASH CUSHIONS TO THE MAINLINE SPEED UNTIL WITHIN 250 FEET OF THE RAMP TERMINAL.

GENERAL NOTES:

1. USE CLASS AA(AE) CONCRETE.
2. USE COATED DEFORMED CARBON STEEL REINFORCEMENT BARS CONFORMING TO AASHTO M 284 OR M 111 AND AASHTO M 31 GRADE 60, RESPECTIVELY.
3. USE OF NON-COATED REINFORCED BARS ALLOWED FOR BARRIER SECTIONS CONSTRUCTED FOR USE IN WORK ZONE APPLICATIONS. MARK AS "WORK ZONE ONLY." SEE "PRECAST BARRIER MARKING DETAIL." DO NOT USE BARRIER MARKED AS "WORK ZONE ONLY" IN PERMANENT APPLICATIONS.
4. CONSTRUCT BARRIER BY FIXED FORM OR SLIP FORM METHOD.
5. PLACE A VERTICAL CONSTRUCTION JOINT AT END OF DAY'S POUR AND WHEN WORK IS HALTED FOR MORE THAN 2 HOURS.
6. PROVIDE END SECTION AT BARRIER ENDS AND AT INTERRUPTIONS IN THE BARRIER INCLUDING EXPANSION JOINTS AND CRASH CUSHIONS.
7. SEE STD DWG GW 6B FOR DELINEATION HARDWARE AND STD DWG GW 7A FOR DELINEATION SPACING.
8. PROVIDE 1.5 INCH MINIMUM COVER TO REINFORCING STEEL UNLESS NOTED OTHERWISE. REINFORCING STEEL DIMENSIONS ARE OUT TO OUT AND INSIDE BEND RADII ARE SHOWN. BEND STIRRUPS OUT OF PLANE IF NECESSARY TO MEET MINIMUM CLEARANCE.
9. LOCATE EXPANSION JOINTS IN CONCRETE BARRIER AT ALL TRANSITIONS AND APPROACH SLABS. USE A TYPE 1 EXPANSION JOINT AT TRANSITIONS. USE A TYPE 2 EXPANSION JOINT AT APPROACH SLABS.
10. INSTALL ELECTRICAL/ATMS CONDUITS, JUNCTION BOXES, AND PULL BOXES AS REQUIRED PER CONTRACT DOCUMENTS.
11. SAW OR CUT CONTRACTION JOINTS 1 INCH DEEP AT PAVEMENT TRANSVERSE JOINTS OR AT 15 FT MAX SPACING WHEN PLACED ON ASPHALT PAVEMENT. SAW OR CUT WITHIN 10 HOURS OF CONCRETE PLACEMENT. USE FORM CONTRACTION JOINT DETAIL IF PLACING BARRIER BY FORM METHOD.

NO.	DATE	APPR.	REMARKS

REVISIONS

UTAH DEPARTMENT OF TRANSPORTATION
STANDARD DRAWINGS FOR ROAD AND BRIDGE CONSTRUCTION
SALT LAKE CITY, UTAH

RECOMMENDED FOR APPROVAL — JAN. 01, 2017 DATE
CHAIRMAN STANDARDS COMMITTEE APPROVED — JAN. 01, 2017 DATE
DEPUTY DIRECTOR

CONCRETE BARRIER GENERAL NOTES AND STANDARD DETAILS 1 OF 2

STANDARD DRAWING TITLE

STD. DWG. NO.
BA 1A1

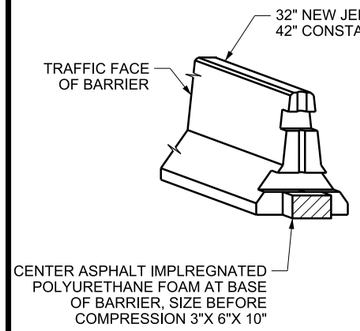

BARRIER SEAL

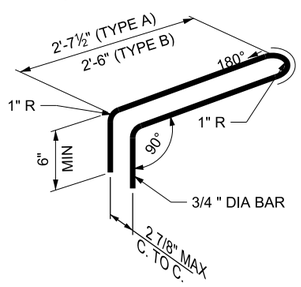

CONNECTION LOOP

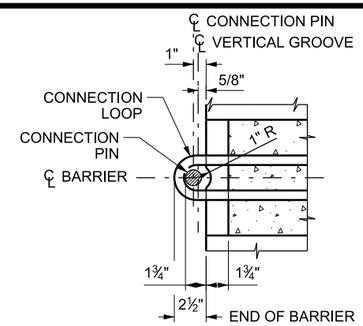

CONNECTION LOOP PLACEMENT

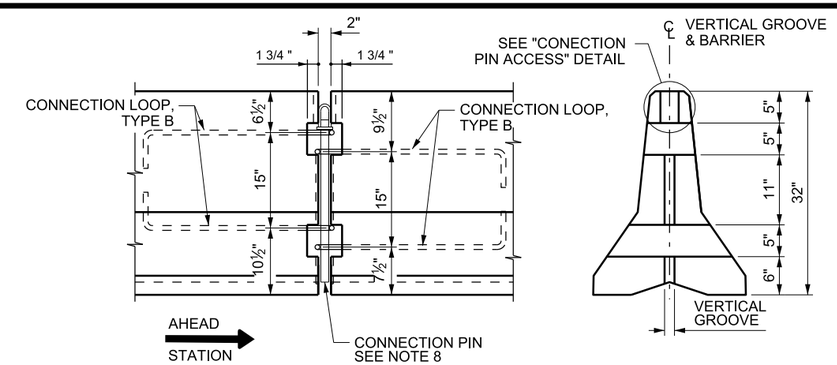

TYPICAL 32 INCH NEW JERSEY BARRIER CONNECTION

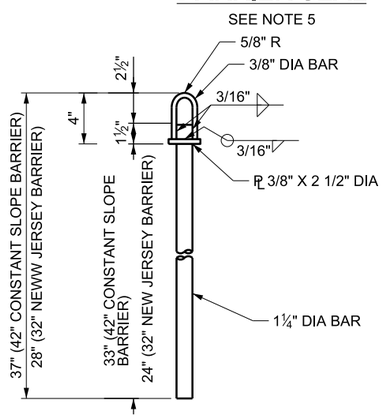

CONNECTION PIN OPTION 1

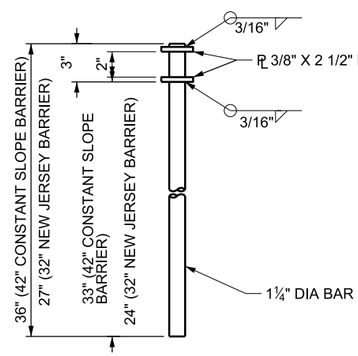

CONNECTION PIN OPTION 2

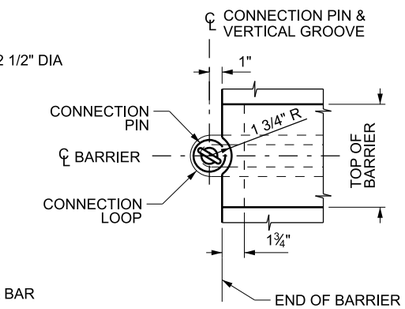

CONNECTION PIN ACCESS

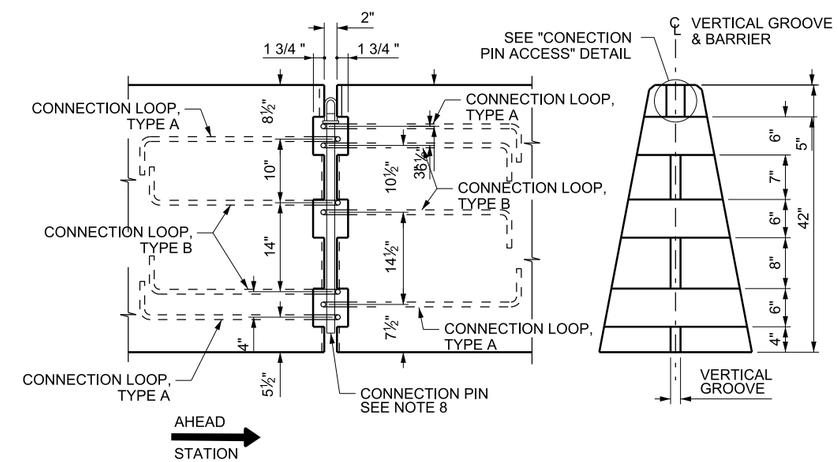

TYPICAL 42 INCH CONSTANT SLOPE BARRIER CONNECTION

BARRIER CONNECTION DETAILS

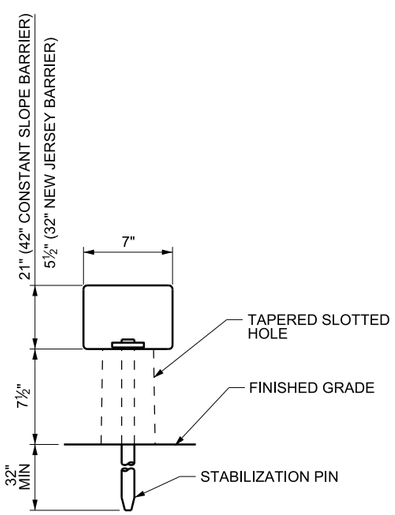

BLOCK OUT ELEVATION

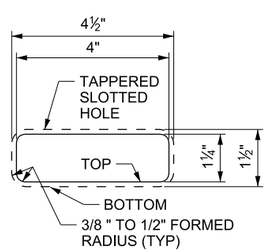

BLOCK OUT PLAN

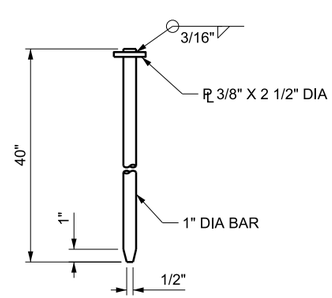

STABILIZATION PIN

BARRIER BLOCK OUT AND STABILIZATION PIN DETAILS

NOTES:

1. USE STEEL ROD MEETING ASTM A 36.
2. HOT DIP GALVANIZE CONNECTION LOOP BARS, CONNECTION PINS, AND STABILIZATION PINS AFTER MANUFACTURING.
3. DO NOT HEAT TO MAKE BENDS.
4. USE OF A HOT-FORGED HEAD, MEETING PLATE SIZE AND THICKNESS IS ACCEPTABLE IN PLACE OF A WELDED PLATE.
5. DO NOT USE BARRIER SEAL WHEN SCUPPERS ARE PRESENT.
6. CENTER STABILIZATION PIN IN TAPERED SLOTTED HOLE.
7. PRE-DRILL A 1 INCH DIA HOLE THROUGH PAVEMENT AND ENTIRE DEPTH WHEN SOIL CONDITIONS REQUIRE IT PRIOR TO INSTALLING STABILIZATION PIN.
8. PULL BARRIER TIGHT AFTER INSTALLING THE CONNECTION PIN THEN INSTALL STABILIZATION PINS IF REQUIRED.
9. SEE APPLICABLE CONCRETE BARRIER DRAWINGS FOR REINFORCING STEEL REQUIREMENTS.

NO.	DATE	APPR.	REMARKS

REVISIONS

UTAH DEPARTMENT OF TRANSPORTATION
STANDARD DRAWINGS FOR ROAD AND BRIDGE CONSTRUCTION
SALT LAKE CITY, UTAH

RECOMMENDED FOR APPROVAL — JAN. 01, 2017 DATE
CHAIRMAN: STANDARDS COMMITTEE APPROVED — JAN. 01, 2017 DATE
DEPUTY DIRECTOR

CONCRETE BARRIER GENERAL NOTES AND STANDARD DETAILS 2 OF 2
STANDARD DRAWING TITLE

STD. DWG. NO.
BA 1A2

DGN File: L:\Standard Drawings\Imperial\2017 Approved\1-All Drawings\BA01A2.dgn
28-NOV-2016

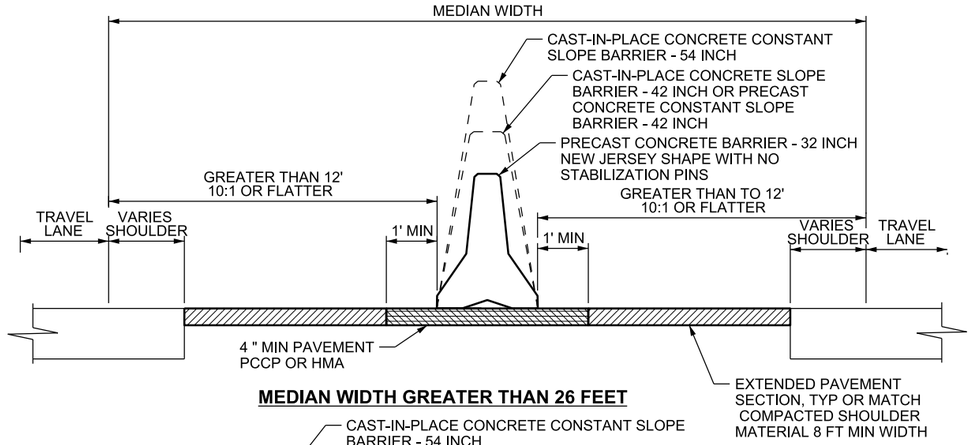

MEDIAN WIDTH GREATER THAN 26 FEET

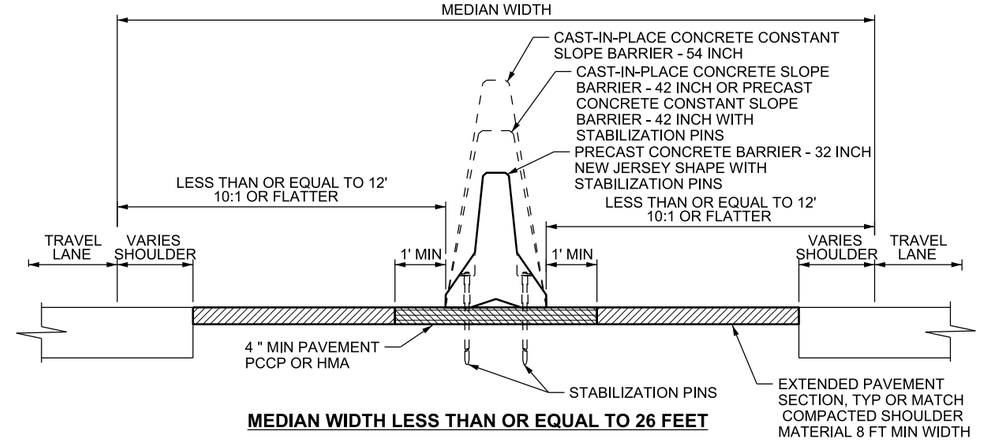

MEDIAN WIDTH LESS THAN OR EQUAL TO 26 FEET

MEDIAN INSTALLATION

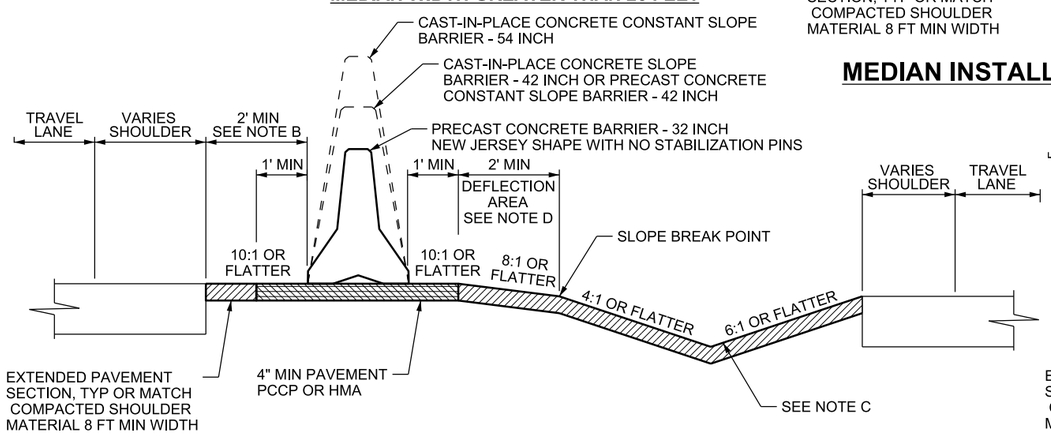

PLACEMENT WITH DEFLECTION AREA

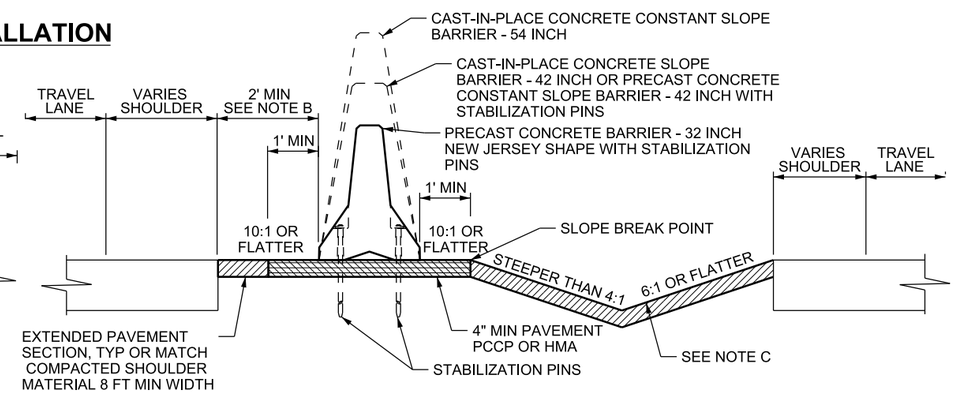

PLACEMENT WITHOUT DEFLECTION AREA

MEDIAN INSTALLATION WITH OFFSET ROADWAY

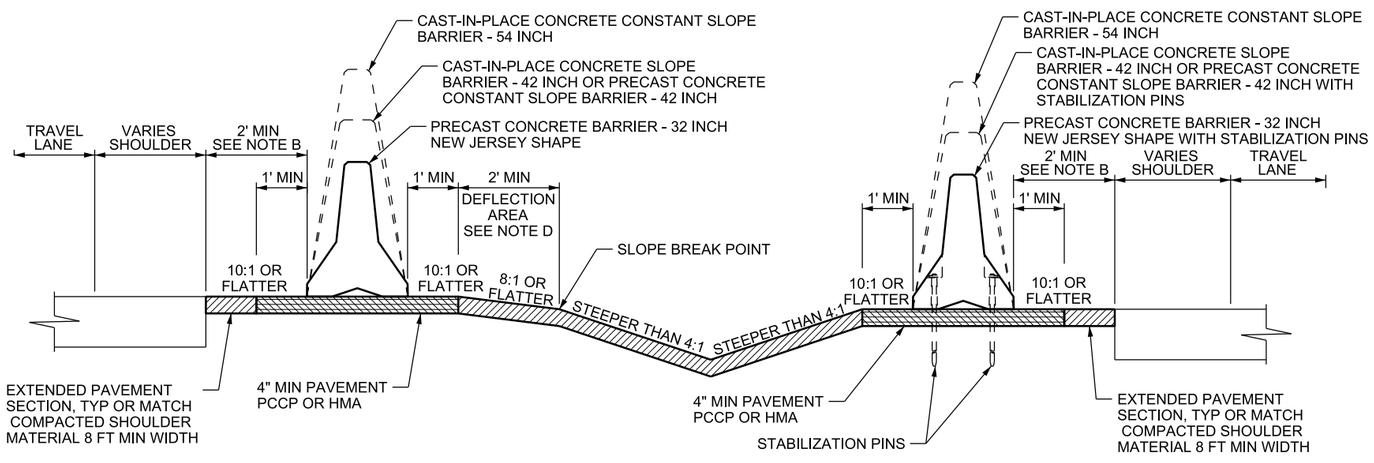

MEDIAN INSTALLATION WITH SLOPES STEEPER THAN 4:1

DESIGN-ONLY NOTES:

A. THIS SHEET APPLICABLE WHEN MEDIAN BARRIER IS WARRANTED.

B. THE 2 FT MIN OFFSET IS OPTIONAL WHEN ROADWAY DESIGN REQUIRES 12 FT OR WIDER EFFECTIVE SHOULDER.

C. A 4:1 OR FLATTER FORESLOPE AND 6:1 OR FLATTER BACKSLOPE MAY BE USED AS AN ALTERNATE MEDIAN DITCH.

D. DEFLECTION AREA NOT REQUIRED FOR CAST-IN-PLACE BARRIER.

E. CAST-IN-PLACE CONCRETE CONSTANT SLOPE BARRIER - 42 INCH, APPROACH END SECTION, 54 INCH APPRACH END, OR PRECAST CONCRETE CONSTANT SLOPE BARRIER 42 INCH 32 INCH NEW JERSEY SHAPE TRANSITION REQUIRED ON 42 INCH BARRIER IF USING A CRASH CUSHION OR GUARDRAIL TRANSITION.

F. SELECT THE APPROPRIATE END TREATMENT OR CRASH CUSHION FROM THE GUIDELINES FOR CRASH CUSHION AND BARRIER END TREATMENTS. USE AN END TREATMENT WHEN OPPOSING TRAFFIC HAS LESS THAN THE MAXIMUM REQUIRED AASHTO CLEAR ZONE.

NOTES:

1. PIN ALL PRECAST BARRIER SECTIONS TOGETHER AT CONNECTION LOOPS. PULL BARRIER TIGHT AFTER INSTALLING CONNECTION PIN.

2. P1 BARS IN CAST-IN-PLACE CONCRETE BARRIER ARE REQUIRED IN ALL APPLICATIONS. SEE APPLICABLE CAST-IN-PLACE CONCRETE BARRIER DRAWINGS FOR REINFORCING STEEL REQUIREMENTS.

3. TEMPORARY WORK ZONE APPLICATIONS:
   - 3A. STABILIZATION PINS ARE NOT REQUIRED WHEN 1 FT OR MORE IS PROVIDED BEYOND THE BARRIER.
   - 3B. STABILIZATION PINS ARE REQUIRED WHEN SLOPE BEHIND THE 1 FT DISTANCE BEYOND THE BARRIER IS STEEPER THAN 2:1.
   - 3C. APPROVAL FROM THE REGION TRAFFIC ENGINEER IS REQUIRED TO USE STABILIZATION PINS IN LIEU OF THE 1 FT DISTANCE BEHIND THE BARRIER.
   - 3D. DO NOT PLACE STABILIZATION PINS IN NEW ROADWAY SURFACE FOR TEMPORARY BARRIER.
   - 3E. INSTALL APPROVED CRASH CUSHION OR END TREATMENT ON APPROACH ENDS. SEE GUIDELINES FOR CRASH CUSHION AND END TREATMENTS, CURRENT EDITION, WORK ZONE DEVICES.

REVISIONS

NO.	DATE	APPR.	REMARKS

UTAH DEPARTMENT OF TRANSPORTATION
STANDARD DRAWINGS FOR ROAD AND BRIDGE CONSTRUCTION
SALT LAKE CITY, UTAH

RECOMMENDED FOR APPROVAL — JAN. 01, 2017 DATE
CHAIRMAN STANDARDS COMMITTEE APPROVED — JAN. 01, 2017 DATE
DEPUTY DIRECTOR

STANDARD DRAWING TITLE
CONCRETE BARRIER MEDIAN INSTALLATION

STD. DWG. NO.
BA 1B

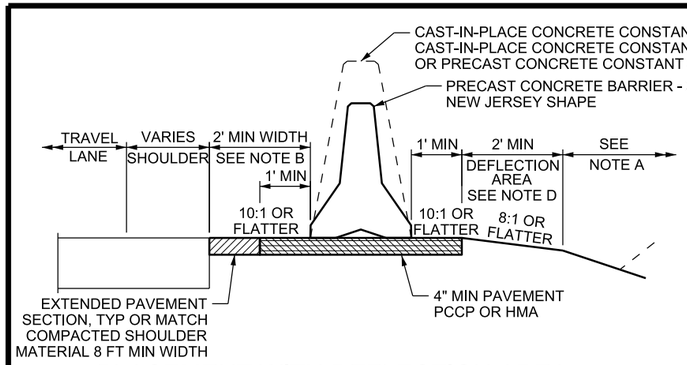

PLACEMENT WITH DEFLECTION AREA

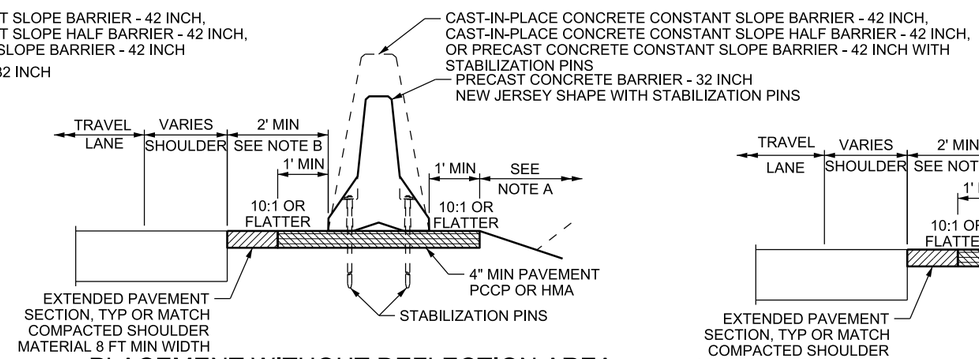

PLACEMENT WITHOUT DEFLECTION AREA

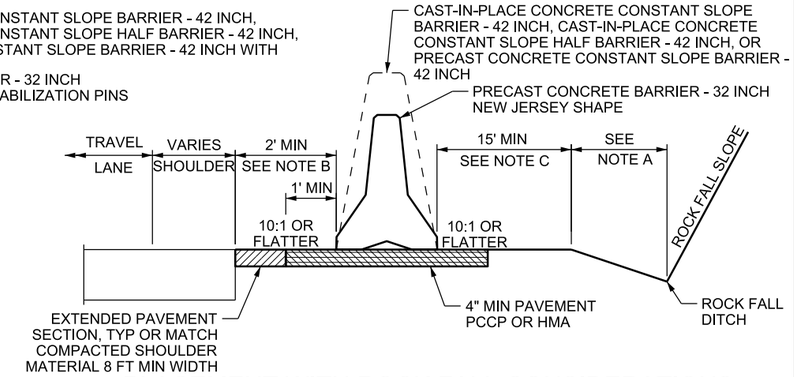

PLACEMENT WITH ROCK FALL CONSIDERATIONS

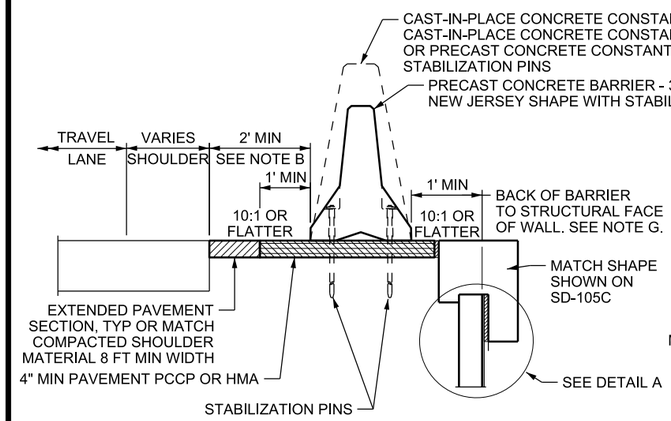

PLACEMENT WITH SINGLE STAGE MSE OR RETAINING WALL

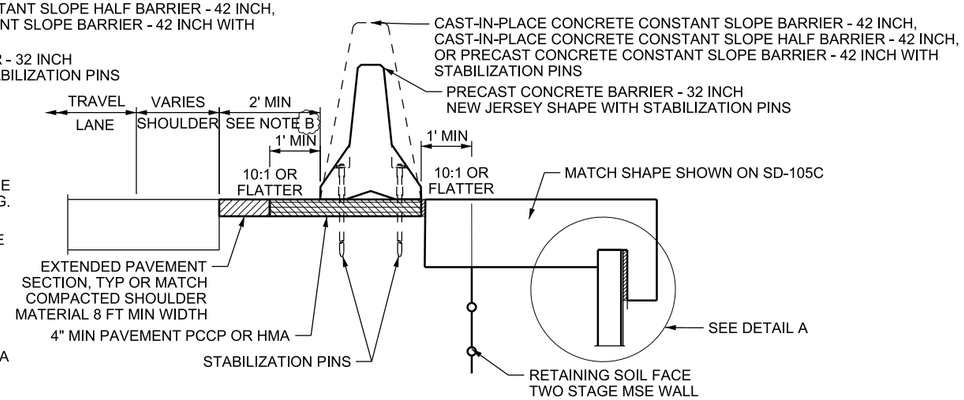

PLACEMENT WITH TWO STAGE MSE WALL

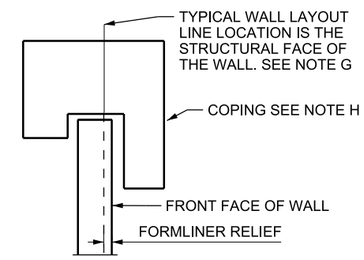

DETAIL A

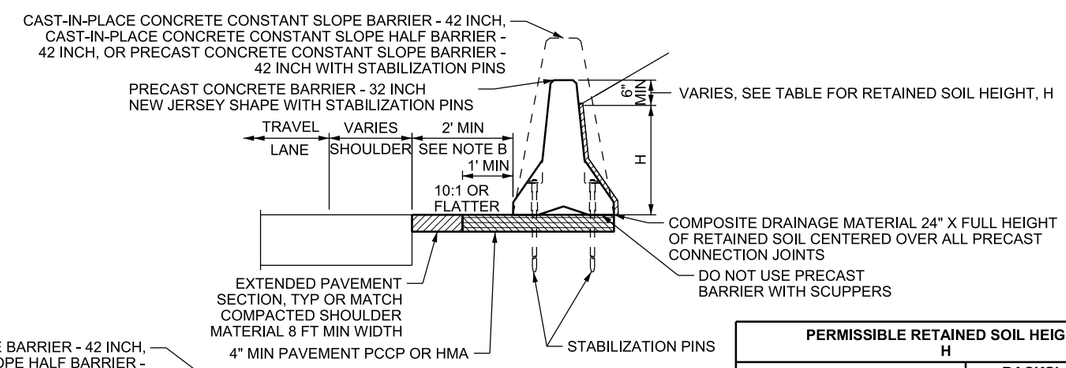

RETAINING BARRIER

ENGINEER'S APPROVAL REQUIRED WITH VERIFICATION BY THE REGION PRECONSTRUCTION ENGINEER

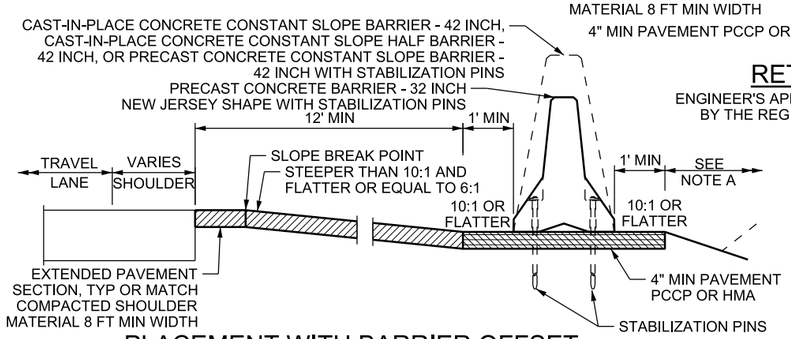

PLACEMENT WITH BARRIER OFFSET

PERMISSIBLE RETAINED SOIL HEIGHT H		
BARRIER TYPE	BACKSLOPE	
	2:1 OR FLATTER	LEVEL WITH LL SURCHARGE *
PRECAST CONCRETE BARRIER - 32 INCH NEW JERSEY SHAPE	26"	13"
CAST-IN-PLACE CONCRETE CONSTANT SLOPE BARRIER - 42 INCH OR PRECAST CONCRETE CONSTANT SLOPE BARRIER - 42 INCH	35"	19"
CAST-IN-PLACE CONCRETE CONSTANT SLOPE HALF BARRIER - 42 INCH	29"	15"

*ACCOUNTS FOR 2 FT OF EQUIVALENT SOIL FOR LIVE LOAD SURCHARGE.

DESIGN-ONLY NOTES:

A. SEE STD DWG DD 3, DD 10, DD 11 OR DD 12 FOR REQUIREMENTS.
B. THE 2 FT MIN BARRIER OFFSET IS OPTIONAL WHEN ROADWAY DESIGN REQUIRES A 12 FT OR WIDER EFFECTIVE SHOULDER.
C. ESTABLISH A 15 FT MAINTENANCE AREA 10:1 OR FLATTER ABOVE ROCK FALL DITCH.
D. DEFLECTION AREA NOT REQUIRED FOR CAST-IN-PLACE BARRIER.
E. CAST-IN-PLACE CONCRETE CONSTANT SLOPE BARRIER - 42 INCH, APPROACH END SECTION, 54 INCH APPROACH END, OR PRECAST CONCRETE CONSTANT SLOPE BARRIER 42 INCH 32 INCH NEW JERSEY SHAPE TRANSITION REQUIRED ON 42 INCH BARRIER IF USING A CRASH CUSHION OR GUARDRAIL TRANSITION.
F. SELECT THE APPROPRIATE END TREATMENT OR CRASH CUSHION FROM THE GUIDELINES FOR CRASH CUSHION AND BARRIER END TREATMENTS. USE AN END TREATMENT WHEN TRAFFIC HAS LESS THAN THE MAXIMUM REQUIRED AASHTO CLEAR ZONE.
G. STRUCTURAL FACE OF WALL IS THE FRONT FACE MINUS THE FORMLINER RELIEF. THE STRUCTURAL FACE OF THE SOIL NAIL WALL IS THE FRONT FACE INTEGRAL WITH THE SOIL NAIL WALL ANCHORS MINUS ANY FORMLINER RELIEF. WHEN SOIL NAIL WALLS ARE FACED WITH PRECAST PANELS THE STRUCTURAL FACE IS THE PRECAST PANEL SIDE OF THE SOIL RETAINING ELEMENTS INTEGRAL WITH THE SOIL NAILS.
H. COPING IS NOT REQUIRED ON CAST-IN-PLACE WALLS OR CAST-IN-PLACE WALL FACING

NOTES

1. PIN ALL PRECAST BARRIER SECTIONS TOGETHER AT CONNECTION LOOPS. PULL BARRIER TIGHT AFTER INSTALLING CONNECTION PIN.
2. P1 BARS IN CAST-IN-PLACE CONCRETE BARRIER ARE REQUIRED IN ALL APPLICATIONS. SEE APPLICABLE CAST-IN-PLACE CONCRETE BARRIER DRAWINGS FOR REINFORCING STEEL REQUIREMENTS.
3. TEMPORARY WORK ZONE APPLICATIONS:
   - 3A. STABILIZATION PINS ARE NOT REQUIRED WHEN 1 FT OR MORE IS PROVIDED BEYOND THE BARRIER.
   - 3B. STABILIZATION PINS ARE REQUIRED WHEN SLOPE BEHIND THE 1 FT DISTANCE BEYOND THE BARRIER IS STEEPER THAN 2:1.
   - 3C. APPROVAL FROM THE REGION TRAFFIC ENGINEER IS REQUIRED TO USE STABILIZATION PINS IN LIEU OF THE 1 FT DISTANCE BEHIND THE BARRIER.
   - 3D. DO NOT PLACE STABILIZATION PINS IN NEW ROADWAY SURFACE FOR TEMPORARY BARRIER.
   - 3E. INSTALL APPROVED CRASH CUSHION OR END TREATMENT ON APPROACH ENDS. SEE GUIDELINES FOR CRASH CUSHION AND END TREATMENTS, CURRENT EDITION, WORK ZONE DEVICES.

REVISIONS

NO.	DATE	APPR.	REMARKS

UTAH DEPARTMENT OF TRANSPORTATION
STANDARD DRAWINGS FOR ROAD AND BRIDGE CONSTRUCTION
SALT LAKE CITY, UTAH

RECOMMENDED FOR APPROVAL — JAN. 01, 2017 DATE
CHAIRMAN STANDARDS COMMITTEE APPROVED — JAN. 01, 2017 DATE
DEPUTY DIRECTOR

STANDARD DRAWING TITLE
CONCRETE BARRIER SHOULDER INSTALLATION

STD. DWG. NO.
BA 1C

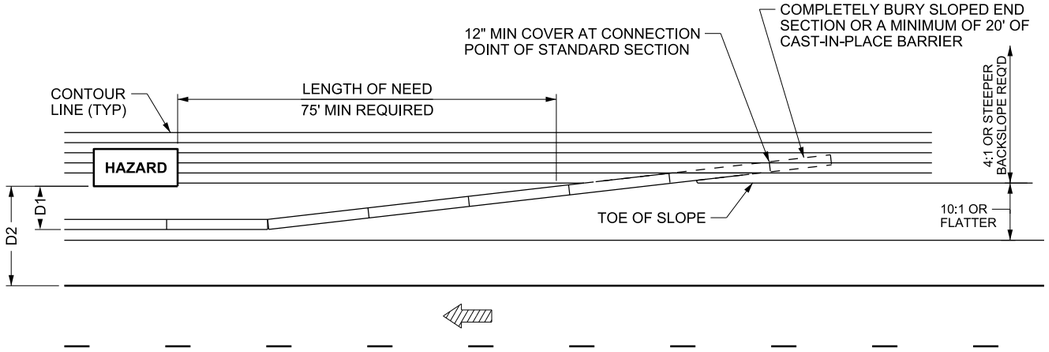

LENGTH OF NEED (LON) FORMULAS FOR BURIED END SECTION

BACKSLOPE STEEPER THAN 3:1
LON = FLR x D1

BACKSLOPE 3:1 TO A MINIMUM 4:
≥ 5O MPH "LON"= 450 - (15 x D2)
≤ 45 MPH "LON"= 250 - (15 x D2)

LON: LENGTH OF NEED
FLR: BARRIER FLARE RATE
D1: DISTANCE FROM FACE OF BARRIER TO FACE OF HAZARD OR DITCH BOTTOM
D2: DISTANCE FROM EDGE OF TRAVEL LANE TO FACE OF HAZARD OR DITCH BOTTOM

BURIED END SECTION PLAN

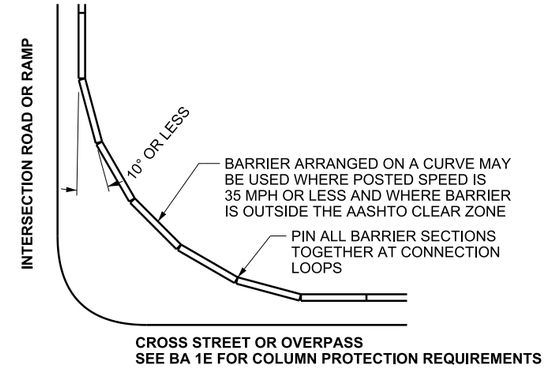

CROSS STREET OR OVERPASS
SEE BA 1E FOR COLUMN PROTECTION REQUIREMENTS

CURVED LAYOUT

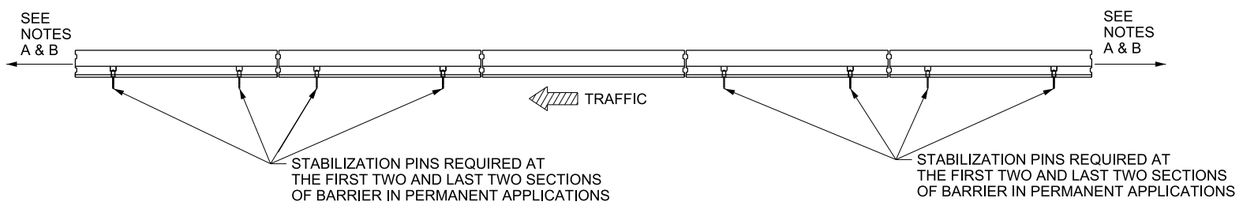

TYPICAL ELEVATION

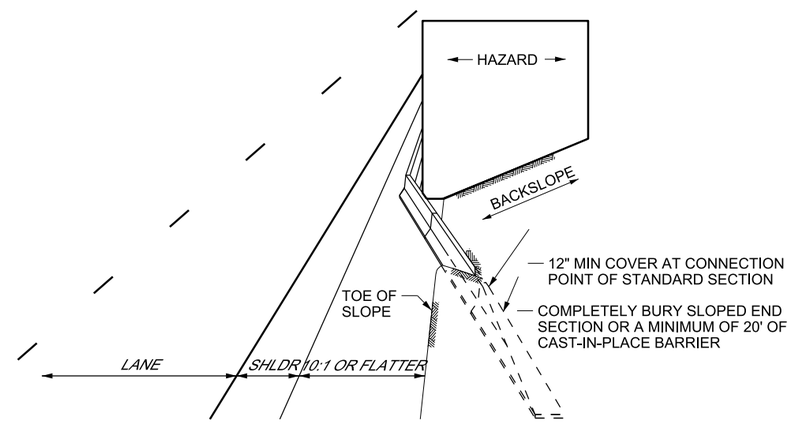

BURIED END SECTION PERSPECTIVE VIEW

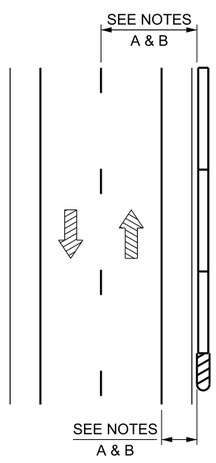

TWO LANE / TWO WAY

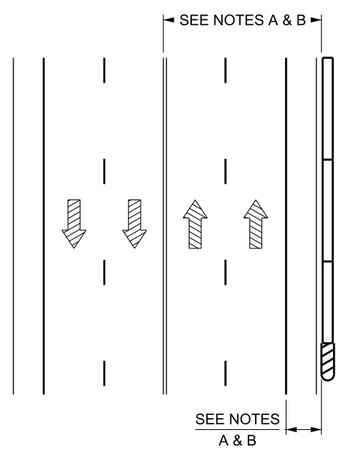

MULTI-LANE ARTERIAL

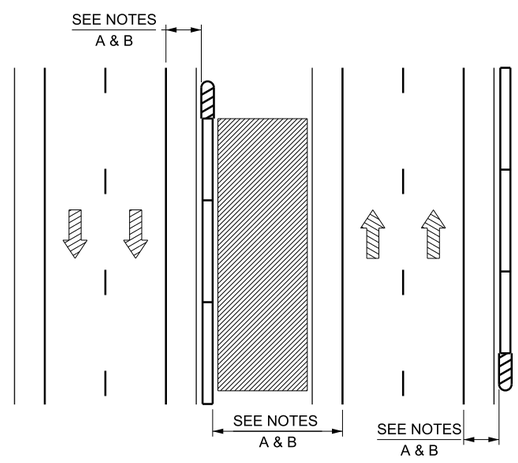

MULTI-LANE ARTERIAL WITH TRAVERSABLE MEDIAN

DESIGN-ONLY NOTES:

A. INSTALL APPROPRIATE END TREATMENT, CRASH CUSHION, OR END SECTION WHEN BARRIER END IS WITHIN THE MAXIMUM REQUIRED AASHTO CLEAR ZONE. DO NOT EXTEND FLARED BARRIER IN ORDER TO MOVE END OF BARRIER OUTSIDE OF CLEAR ZONE TO AVOID USING END PROTECTION.

1. SELECT APPROPRIATE END TREATMENT OR CRASH CUSHION FROM THE GUIDELINES FOR CRASH CUSHIONS AND BARRIER END TREATMENTS WHEN DESIGN SPEED EXCEEDS 40 MPH. USE AN END TREATMENT WHEN RECOVERY AREA BEHIND SELECTED SYSTEM IS ACHIEVED.
2. APPROACH END NON-DIVIDED ROADWAYS: INSTALL A SLOPED END SECTION WHEN DESIGN SPEED FOR ROADWAY IS 40 MPH OR LESS. USE APPROPRIATE SECTION FOR BARRIER TYPE.
3. TRAILING END NON-DIVIDED ROADWAYS: INSTALL A SLOPED END SECTION ON TRAILING ENDS WHEN AN END TREATMENT OR CRASH CUSHION IS NOT REQUIRED.

B. INSTALL APPLICABLE BARRIER TRANSITION PRIOR TO INSTALLING W-BEAM, END TREATMENT, OR CRASH CUSHION WHEN A CONSTANT SLOPE SYSTEM IS USED.

C. USE REQUIRED CLEAR ZONE FROM THE ROADSIDE DESIGN GUIDE. USE APPROPRIATE FLARE RATE AS SUGGESTED IN ROADSIDE DESIGN GUIDE FOR RIGID BARRIER SYSTEMS, WHEN BARRIER IS PLACED WITH A FLARE.

D. PLACEMENT WITH CURBS:

1. 32 INCH BARRIER: 10-FT SET BACK REQUIRED FROM FACE OF CURB.
2. 42 INCH AND 54 INCH BARRIER: 10-FT SET BACK RECOMMENDED FROM FACE OF CURB.

E. SLOPED END SECTION DOES NOT NEED TO BE PLACED ON A PAVED SURFACE WHEN USED IN A BURIED END SECTION APPLICATION.

REVISIONS			
NO.	DATE	APPR.	REMARKS

UTAH DEPARTMENT OF TRANSPORTATION
STANDARD DRAWINGS FOR ROAD AND BRIDGE CONSTRUCTION
SALT LAKE CITY, UTAH

RECOMMENDED FOR APPROVAL — JAN. 01, 2017 DATE
CHAIRMAN STANDARDS COMMITTEE APPROVED — JAN. 01, 2017 DATE
DEPUTY DIRECTOR

CONCRETE BARRIER LAYOUT
STANDARD DRAWING TITLE

STD. DWG. NO.
BA 1D

28-NOV-2016 DGN File: L:\Standard Drawings\Imperial\2017 Approved\1-All Drawings\BA01D.dgn

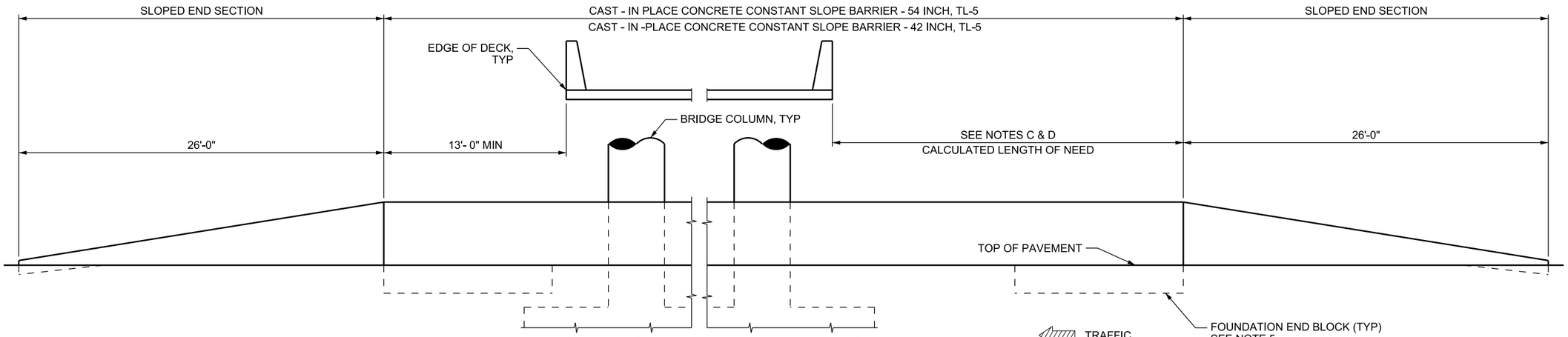

ELEVATION - DESIGN SPEED = 40 MPH OR LESS

HMA SHOWN, PCCP SIMILAR

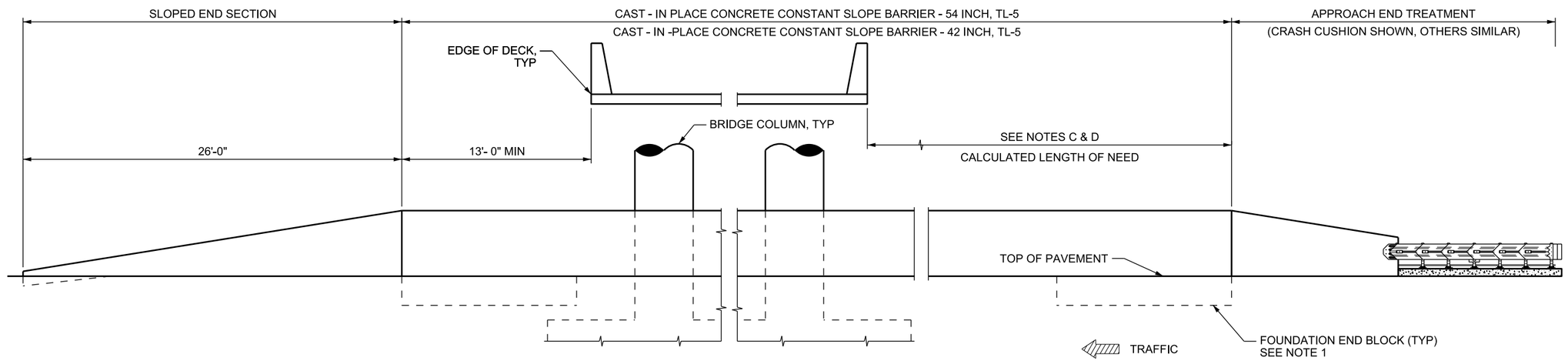

ELEVATION - DESIGN SPEED = GREATER THAN 40 MPH

HMA SHOWN, PCCP SIMILAR

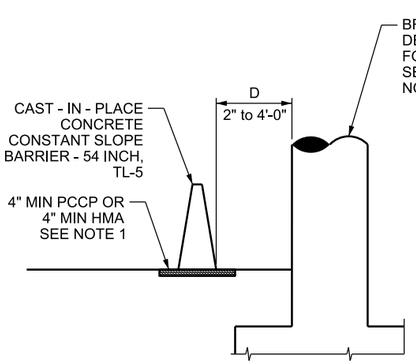

SECTION

D = 2" TO 4'-0"

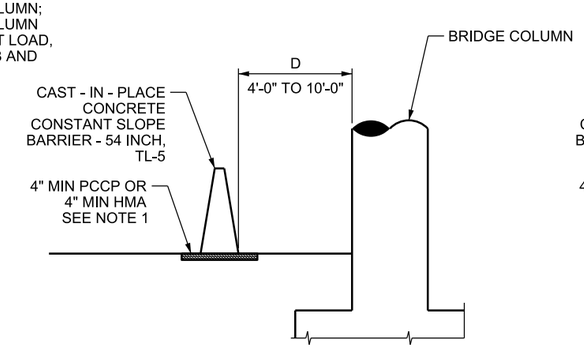

SECTION

D = 4'-0" TO 10'-0"

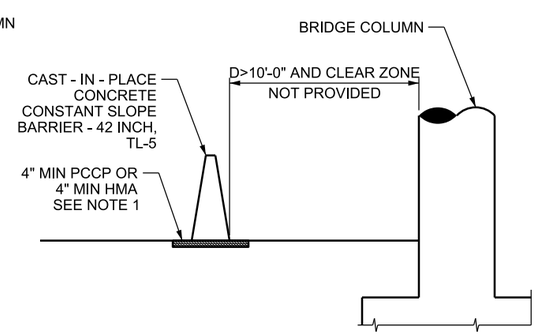

SECTION

D > 10'-0"

DESIGN-ONLY NOTES:

A. APPROACH END TREATMENTS AND SLOPED END SECTIONS ARE NOT REQUIRED WHEN CONTINUING BARRIER OR USING A BARRIER TRANSITION.

B. DESIGN BRIDGE COLUMN FOR A 600 KIP VEHICULAR COLLISION FORCE APPLIED AT 4 FT ABOVE GROUND WHEN D IS LESS THAN 4 FT.

C. PROTECT COLUMN WITHIN THE MAXIMUM REQUIRED AASHTO CLEAR ZONE. USE TL-5 BARRIER THROUGHOUT THE CALCULATED LENGTH OF NEED.

D. USE 50 FT MINIMUM IF CALCULATED LENGTH OF NEED IS LESS THAN 50 FT.

E. AN APPROVED DEVIATION FROM DEPARTMENT STANDARDS IS REQUIRED FOR EXISTING AND TEMPORARY BRIDGE COLUMNS THAT DO NOT MEET THE REQUIREMENTS OF THIS DRAWING UNLESS THE DESIGNER DEMONSTRATES THE BRIDGE COLUMN CAN WITHSTAND THE VEHICULAR COLLISION FORCE DESIGN REQUIREMENT IN NOTE B.

F. PLACEMENT OF FILL MATERIAL BETWEEN COLUMN AND BACK OF BARRIER IS NOT ALLOWED ABOVE BARRIER FOUNDATION.

NOTES:

1. SEE STD DWGS BA 3E1 AND BA 3O1 FOR FOUNDATION END BLOCK DETAILS. FOUNDATION END BLOCKS ARE NOT REQUIRED WHEN BARRIERS ARE PLACED ON PCCP OF 8 INCH THICKNESS OR GREATER.

REVISIONS

NO.	DATE	APPR.	REMARKS

UTAH DEPARTMENT OF TRANSPORTATION
STANDARD DRAWINGS FOR ROAD AND BRIDGE CONSTRUCTION
SALT LAKE CITY, UTAH

RECOMMENDED FOR APPROVAL — JAN. 01, 2017 DATE
CHAIRMAN STANDARDS COMMITTEE APPROVED — JAN. 01, 2017 DATE
DEPUTY DIRECTOR

STANDARD DRAWING TITLE
CONCRETE BARRIER COLUMN PROTECTION

STD. DWG. NO.
BA 1E

28-NOV-2016
DGN File: L:\Standard_Drawings\Imperial\2017 Approved\1-All Drawings\BA01E.dgn

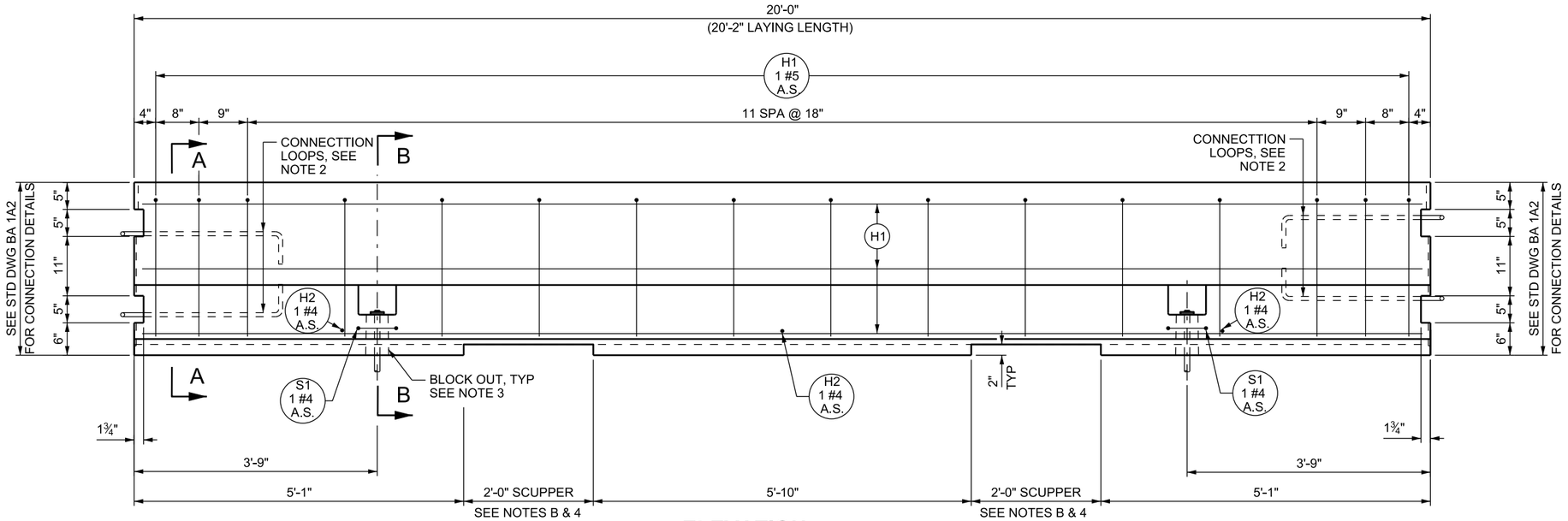

ELEVATION

BAR MARK	BAR SIZE	NO. BARS	LOCATION	SKETCH
H1	#5	7	HORIZONTAL IN BARRIER TIED INSIDE V1 BARS	19'-4"
H2	#4	3	ABOVE H1 BAR AND TIED TO V1 BAR	18"
S1	#4	2	HORIZONTAL AROUND BLOCK OUTS TOTAL LENGTH = 5'-3 1/2"	18¼"; 7¼"; BLOCK OUTS; 1½" R, TYP; 12"
V1	#5	16	VERTICAL IN BARRIER TOTAL LENGTH = 4'-10 1/2"	3¾"; 16" TYP; 17"; 1¼" R; 10½" TYP; 29°; 12°; 29°; 8⅝"; 19"

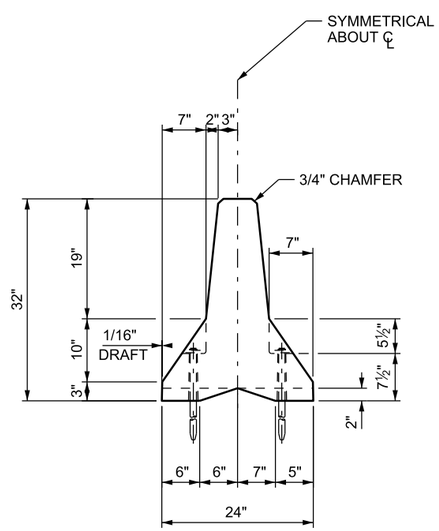

SECTION A-A

REBAR NOT SHOWN FOR CLARITY

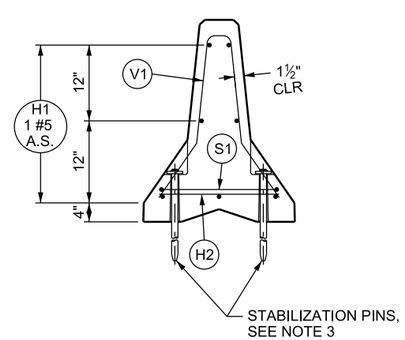

SECTION B-B

DESIGN-ONLY NOTES:

A. SEE STD DWG BA 1B THROUGH BA 1D FOR TYPICAL LAYOUT REQUIREMENTS.

B. INDICATE ON PLAN SET WHEN BARRIER SECTIONS WITH SCUPPERS ARE REQUIRED.

NOTES

1. SEE STD DWG BA 1A1 FOR GENERAL NOTES.
2. SEE "BARRIER CONNECTION DETAILS" ON STD DWG BA 1A2 FOR CONNECTION LOOP DETAILS.
3. SEE "BARRIER BLOCK OUT AND STABILIZATION PIN" ON STD DWG BA 1A2 FOR DETAILS.
4. PROVIDE SUPPERS WHEN NOTED ON PLANS. DO NOT USE BARRIER SEAL WHEN SCUPPERS ARE PRESENT ON BARRIER.
5. EACH BARRIER UNIT WEIGHS 3.9 TONS.

REVISIONS

NO.	DATE	APPR.	REMARKS

UTAH DEPARTMENT OF TRANSPORTATION
STANDARD DRAWINGS FOR ROAD AND BRIDGE CONSTRUCTION
SALT LAKE CITY, UTAH

RECOMMENDED FOR APPROVAL — JAN. 01, 2017 DATE
CHAIRMAN STANDARDS COMMITTEE APPROVED — JAN. 01, 2017 DATE
DEPUTY DIRECTOR

PRECAST CONCRETE BARRIER - 32 INCH NEW JERSEY SHAPE

STANDARD DRAWING TITLE

STD. DWG. NO.
BA 2A

DGN File: L:\Standard Drawings\Imperial\2017 Approved\1-All Drawings\BA02A.dgn
28-NOV-2016

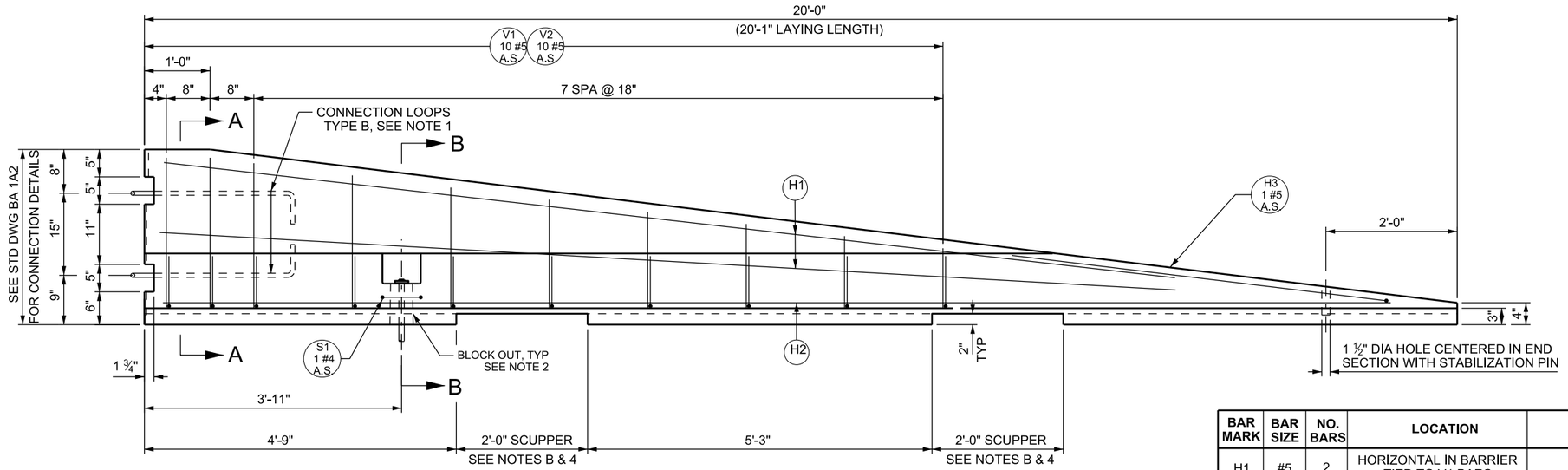

ELEVATION

BAR MARK	BAR SIZE	NO. BARS	LOCATION	SKETCH
H1	#5	2	HORIZONTAL IN BARRIER TIED TO V1 BARS	15'-6"
H2	#5	3	HORIZONTAL IN BOTTOM OF BARRIER AND TIED INSIDE V2 BARS	19'-1"
H3	#5	1	HORIZONTAL AT END OF BARRIER ALONG TOP SLOPE TOTAL LENGTH = 13'-9"	6'-0" TYP; 85° TYP; 1'-9"
S1	#4	1	HORIZONTAL AROUND BLOCK OUTS TOTAL LENGTH = 5'-3 1/2"	18 ¼"; 7 ¼"; BLOCK OUTS; 1 ½" R, TYP; 12"
V1	#5	10	VERTICAL IN BARRIER	L / QTY: 27" 2; 26" 1; 24" 1; 22" 1; 20" 1; 17" 1; 15" 1; 13" 1; 11" 1; L
V2	#5	10	VERTICAL IN BARRIER TIE TO V1 BARS TOTAL LENGTH = 3'-7 1/2"	12"; 55°; 55°; 12"; 19½"

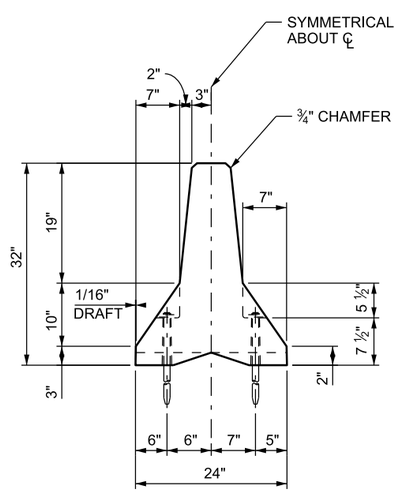

SECTION A - A

REBAR NOT SHOWN FOR CLARITY

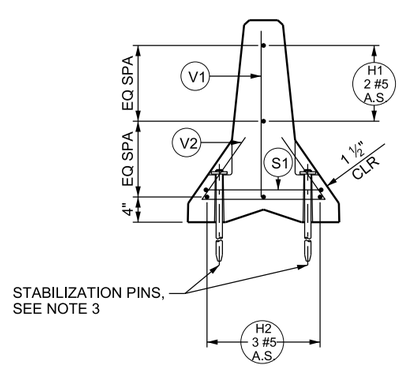

SECTION B - B

DESIGN-ONLY NOTES:

A. SEE STD DWG BA 1B THROUGH BA 1D FOR TYPICAL LAYOUT REQUIREMENTS.
B. INDICATE ON PLAN SET WHEN BARRIER SECTIONS WITH SCUPPERS ARE REQUIRED.
C. USE A SLOPED END SECTION AS ALLOWED ON STD DWG BA 1D.
D. USE PERMITTED IN WORK ZONES WHEN SPEED IS 40 MPH OR LESS PRIOR TO THE START OF THE CONSTRUCTION PROJECT.

NOTES:

1. SEE STD DWG BA 1A1 FOR GENERAL NOTES.
2. SEE "BARRIER CONNECTION DETAILS" ON STD DWG BA 1A2 FOR CONNECTION LOOP DETAILS.
3. SEE "BARRIER BLOCK OUT AND STABILIZATION PIN" ON STD DWG BA 1A2 FOR DETAILS.
4. PROVIDE SCUPPERS AS SHOWN. DO NOT USE BARRIER SEAL WHEN SCUPPERS ARE PRESENT ON BARRIER.
5. INSTALL STABILIZATION PINS IN ALL APPLICATIONS.
6. SLOPED END SECTION WEIGHS 2.6 TONS.

REVISIONS

NO.	DATE	APPR.	REMARKS

UTAH DEPARTMENT OF TRANSPORTATION
STANDARD DRAWINGS FOR ROAD AND BRIDGE CONSTRUCTION
SALT LAKE CITY, UTAH

RECOMMENDED FOR APPROVAL — JAN. 01, 2017 DATE
CHAIRMAN STANDARDS COMMITTEE APPROVED — JAN. 01, 2017 DATE
DEPUTY DIRECTOR

PRECAST CONCRETE BARRIER - 32 INCH NEW JERSEY SHAPE, SLOPED END SECTION (FOR SPEEDS ≤ 40 MPH)

STANDARD DRAWING TITLE

STD. DWG. NO.
BA 2B

DGN File:L:\Standard Drawings\Imperial\2017 Approved\1-All Drawings\BA02B.dgn
28-NOV-2016

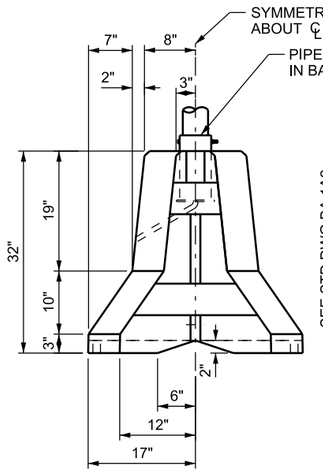

VIEW A-A

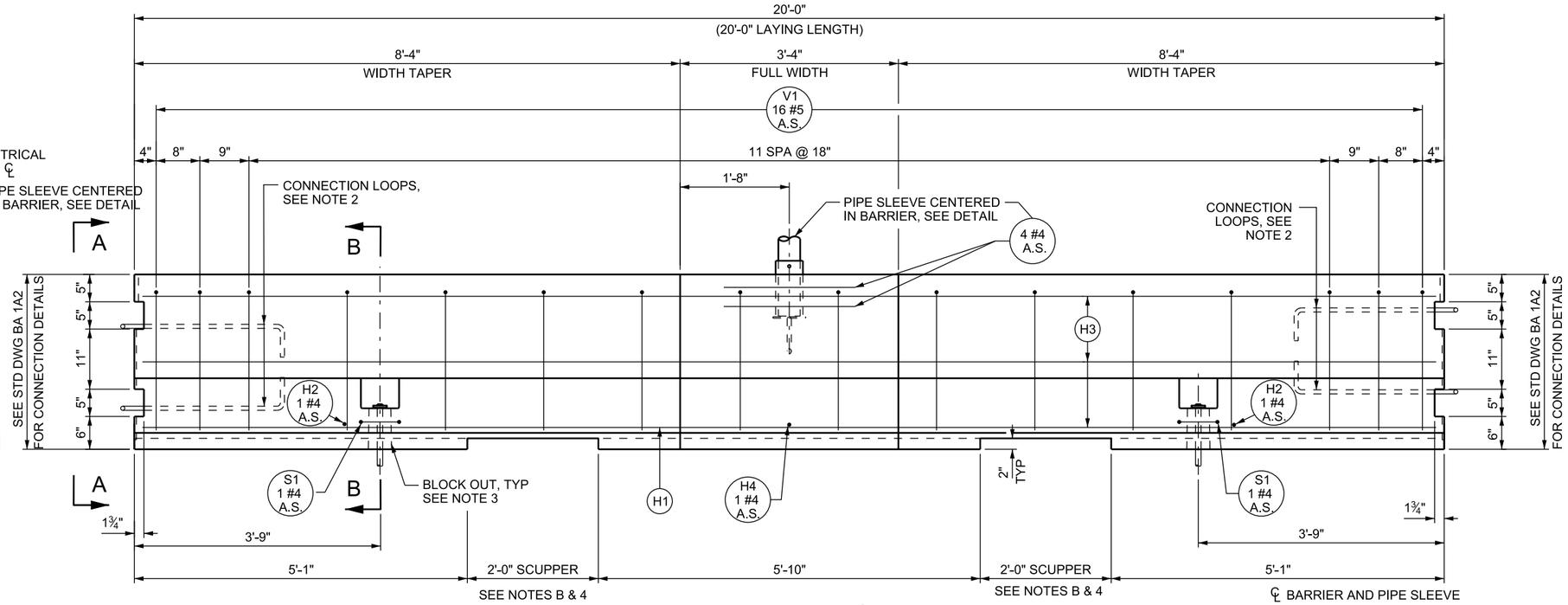

ELEVATION

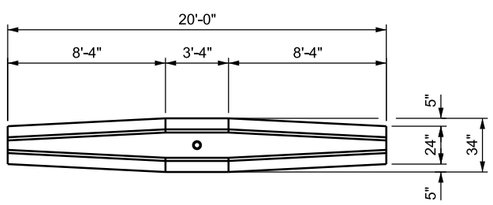

PLAN

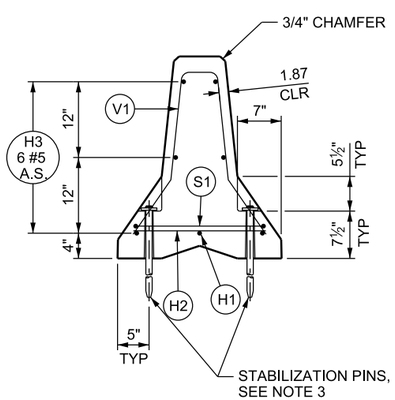

SECTION B-B

BAR MARK	BAR SIZE	NO. BARS	LOCATION	SKETCH
H1	#5	1	HORIZONTAL IN CENTER BOTTOM OF BARRIER	19'-4"
H2	#4	2	ABOVE H3 BAR AND TIED TO V1 BAR	25"
H3	#5	6	HORIZONTAL IN BARRIER TIED TO V1 BARS	8'-2 1/2" 3'-4" 8'-2 1/2" 5"
H4	#4	1	ABOVE H3 BAR	31"
S1	#4	2	HORIZONTAL AROUND BLOCK OUTS TOTAL LENGTH = 6'-0 1/2"	22¾" 7¼" BLOCK OUTS 1½" R, TYP 12"
V1	#5	16	VERTICAL IN BARRIER	W QTY: 3 1/2" 2; 4 1/2" 2; 5 1/2" 2; 7" 2; 9" 2; 10 1/2" 2; 12 1/2" 2; 13" 2 — W, 16" TYP, 1¼" R, 17", 10½" TYP, 29°, 29°, 8⅝", 12°

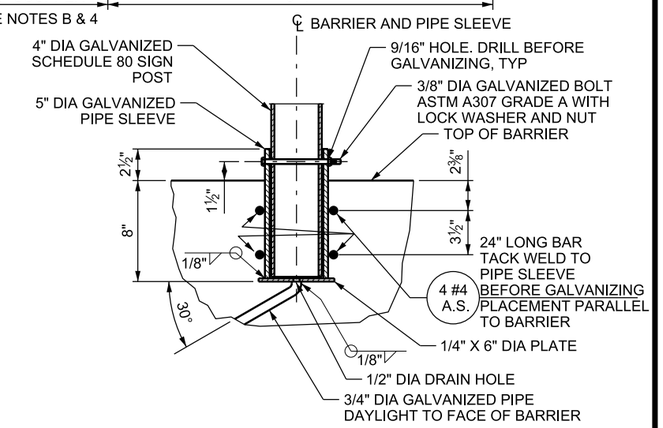

PIPE SLEEVE DETAIL

DESIGN-ONLY NOTES:

A. SEE STD DWG BA 1B THROUGH BA 1D FOR TYPICAL LAYOUT REQUIREMENTS.
B. INDICATE ON PLAN SET WHEN BARRIER SECTIONS WITH SCUPPERS ARE REQUIRED.

NOTES:

1. SEE STD DWG BA 1A1 FOR GENERAL NOTES.
2. SEE "BARRIER CONNECTION DETAILS" ON STD DWG BA 1A2 FOR CONNECTION LOOP DETAILS.
3. SEE "BARRIER BLOCK OUT AND STABILIZATION PIN" ON STD DWG BA 1A2 FOR DETAILS.
4. PROVIDE SCUPPERS AS SHOWN. DO NOT USE BARRIER SEAL WHEN SCUPPERS ARE PRESENT ON BARRIER.
5. SEE SN SERIES STD DWG FOR SIGN MOUNTING, HARDWARE, AND PLACEMENT REQUIREMENTS. MAXIMUM SIGN PANEL AREA IS 36 SQ FT.
6. USE PIPES CONFORMING TO ASTM A 53 GRADE B, ASTM A 500 GRADE B, OR ASTM API 5L GRADE B/X42. GALVANIZE IN ACCORDANCE WITH ASTM A 123 AFTER FABRICATION IS COMPLETED.
7. EACH BARRIER UNIT WEIGHS 5.9 TONS.

REVISIONS

NO.	DATE	APPR.	REMARKS

UTAH DEPARTMENT OF TRANSPORTATION
STANDARD DRAWINGS FOR ROAD AND BRIDGE CONSTRUCTION
SALT LAKE CITY, UTAH

RECOMMENDED FOR APPROVAL — JAN. 01, 2017 DATE
CHAIRMAN STANDARDS COMMITTEE APPROVED — JAN. 01, 2017 DATE
DEPUTY DIRECTOR

PRECAST CONCRETE BARRIER - 32 INCH NEW JERSEY SHAPE, MEDIAN SMALL SIGN SECTION
STANDARD DRAWING TITLE

STD. DWG. NO.
BA 2C

DGN File: L:\Standard Drawings\Imperial\2017 Approved\1-All Drawings\BA02C.dgn
28-NOV-2016

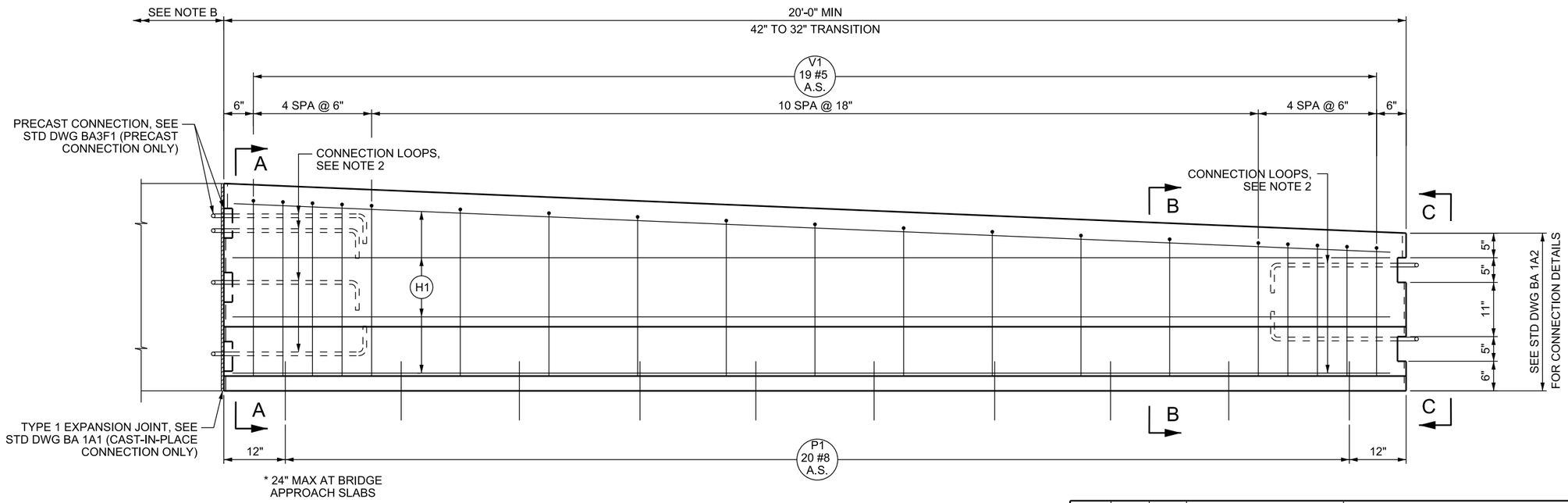

ELEVATION

BAR MARK	BAR SIZE	NO. BARS	LOCATION	SKETCH
H1	#5	7	HORIZONTAL IN BARRIER TIED INSIDE V1 BARS	19'-3"
P1	#8	20	PAVEMENT TO BARRIER THROUGH LIMITS OF BARRIER (VERTICAL)	12" OPTION 1; 12", 3" OPTION 2
V1	#5	19	VERTICAL IN BARRIER	

H	W	QTY
36 1/2"	19 1/2"	1
36"	19"	1
36"	19"	1
35 1/2"	18 1/2"	1
35 1/2"	18 1/2"	1
34 1/2"	17 1/2"	1
34"	17"	1
33"	16"	1
32 1/2"	15"	1
31 1/2"	14 1/2"	1
31"	13 1/2"	1
30"	13"	1
29 1/2"	12"	1
28 1/2"	11"	1
28"	10 1/2"	1
27 1/2"	10"	1
27 1/2"	9 1/2"	1
27"	9"	1
27"	9"	1

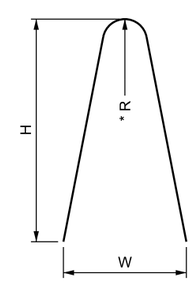

* BEND RADIUS VARIES OVER LENGTH OF BARRIER TRANSITION SECTION

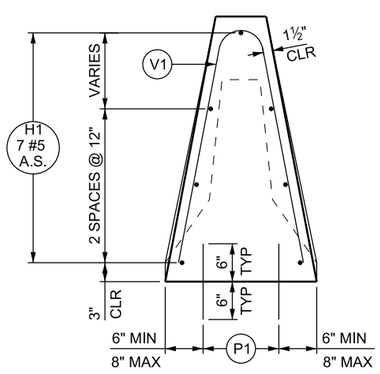

SECTION A-A

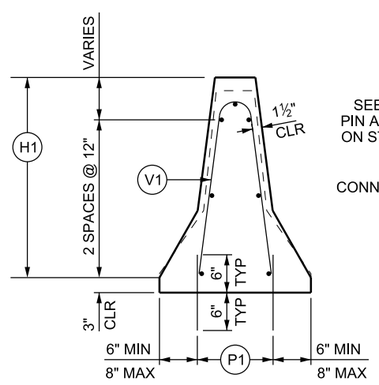

SECTION B-B

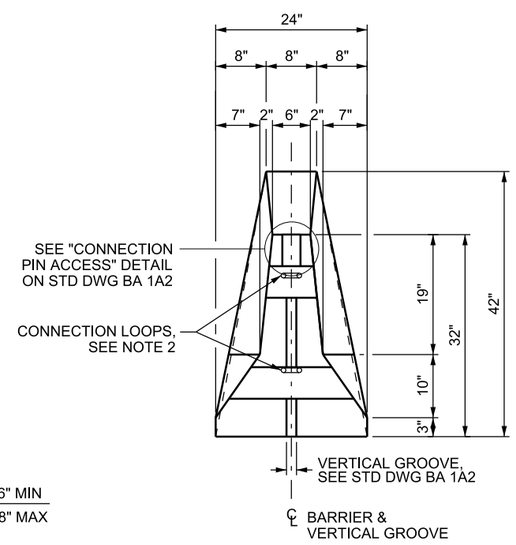

VIEW C-C

DESIGN-ONLY NOTES:

A. SEE STD DWG BA 1B THROUGH BA 1D FOR TYPICAL LAYOUT REQUIREMENTS.
B. ADJACENT BARRIER OPTIONS ARE CAST-IN-PLACE CONSTANT SLOPE BARRIER - 42 INCH; CAST-IN-PLACE CONSTANT SLOPE BARRIER - 54 INCH, 42 INCH CONSTANT SLOPE BARRIER TRANSITION; AND PRECAST CONCRETE CONSTANT SLOPE BARRIER - 42 INCH.

NOTES:

1. SEE STD DWG BA 1A1 FOR GENERAL NOTES.
2. SEE "BARRIER CONNECTION DETAILS" ON STD DWG BA 1A2 FOR CONNECTION LOOP DETAILS. PLACE THE APPROPRIATE CONNECTION LOOP CONFIGURATION THAT CORRESPONDS WITH ADJACENT PRECAST BARRIER.
3. BARRIER SHAPE VARIES LINEARLY OVER LENGTH OF BARRIER TRANSITION.
4. BARRIER TRANSITIONS MAY BE LENGTHENED, WITH ENGINEER'S APPROVAL, TO ELIMINATE A GAP BETWEEN PRECAST AND CAST-IN-PLACE SECTIONS.
5. DRILL AND EPOXY BOND P1 BARS OR HAND POSITION WHILE CONCRETE IS IN A WORKABLE FORM WHEN USING PCCP PAVEMENT.

REVISIONS

NO.	DATE	APPR.	REMARKS

UTAH DEPARTMENT OF TRANSPORTATION
STANDARD DRAWINGS FOR ROAD AND BRIDGE CONSTRUCTION
SALT LAKE CITY, UTAH

RECOMMENDED FOR APPROVAL — JAN. 01, 2017 DATE
CHAIRMAN STANDARDS COMMITTEE APPROVED — JAN. 01, 2017 DATE
DEPUTY DIRECTOR

CAST-IN-PLACE CONCRETE BARRIER - 32 INCH NEW JERSEY SHAPE, 42 INCH CONSTANT SLOPE BARRIER TRANSITION

STANDARD DRAWING TITLE

STD. DWG. NO.
BA 2D

28-NOV-2016 DGN File: L:\Standard Drawings\Imperial\2017 Approved\1-All Drawings\BA02D.dgn

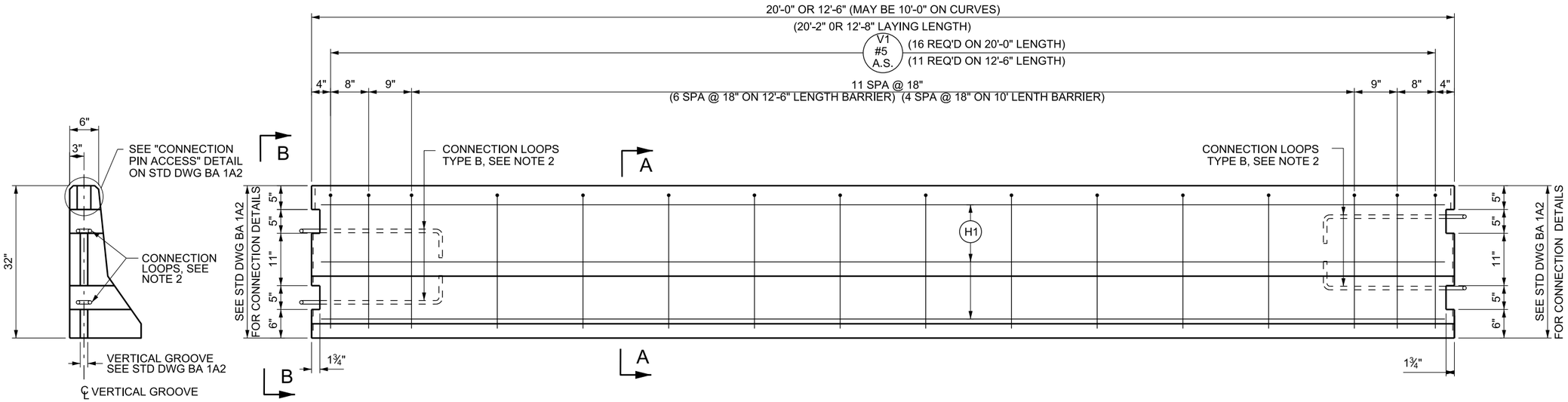

VIEW B-B

ELEVATION

BAR MARK	BAR SIZE	NO. BARS	LOCATION	SKETCH
H1	#5	6	HORIZONTAL IN BARRIER TIED INSIDE V1 BARS	19'-4" OR 11'-10"
V1	#5	16 (20'-0" LENGTH) OR 11 (12'-6" LENGTH) 10 (10' LENGTH)	VERTICAL IN BARRIER TOTAL LENGTH = 4'-10 1/2"	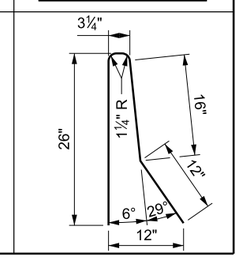

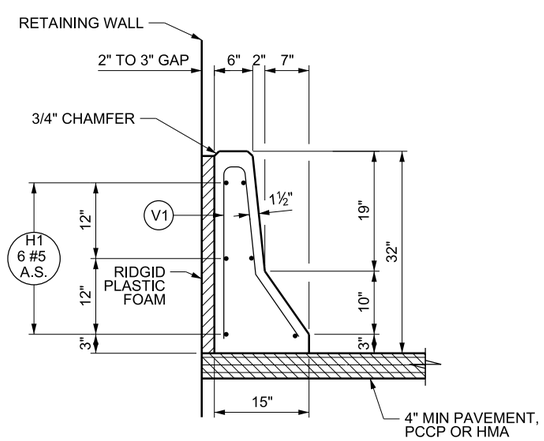

SECTION A-A

AT RETAINING WALL

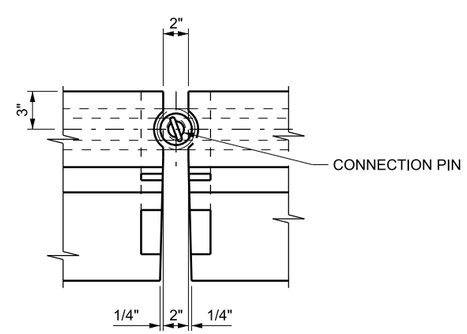

PARTIAL PLAN

DESIGNER-ONLY NOTES:

A. DO NOT USE AS RETAINING BARRIER. REFER TO STD DWG BA 1C FOR RETAINING BARRIER APPLICATIONS.

B. USE ONLY IN FRONT OF A RETAINING WALL. DO NOT USE IN A WORK ZONE APPLICATION.

NOTES:

1. SEE STD DWG BA 1A1 FOR GENERAL NOTES.
2. SEE "BARRIER CONNECTION DETAILS" ON STD DWG BA 1A2 FOR CONNECTION LOOP DETAILS.
3. BARRIER UNIT WEIGHT: 3.0 TONS (20'-0" LENGTH)
   1.9 TONS (12'-6" LENGTH)

REVISIONS

NO.	DATE	APPR.	REMARKS

UTAH DEPARTMENT OF TRANSPORTATION
STANDARD DRAWINGS FOR ROAD AND BRIDGE CONSTRUCTION
SALT LAKE CITY, UTAH

RECOMMENDED FOR APPROVAL — JAN. 01, 2017 DATE
CHAIRMAN STANDARDS COMMITTEE APPROVED — JAN. 01, 2017 DATE
DEPUTY DIRECTOR

PRECAST CONCRETE
HALF BARRIER - 32 INCH
NEW JERSEY SHAPE

STANDARD DRAWING TITLE

STD. DWG. NO.
BA 2E

DGN File: L:\Standard Drawings\Imperial\2017 Approved\1-All Drawings\BA02E.dgn
28-NOV-2016

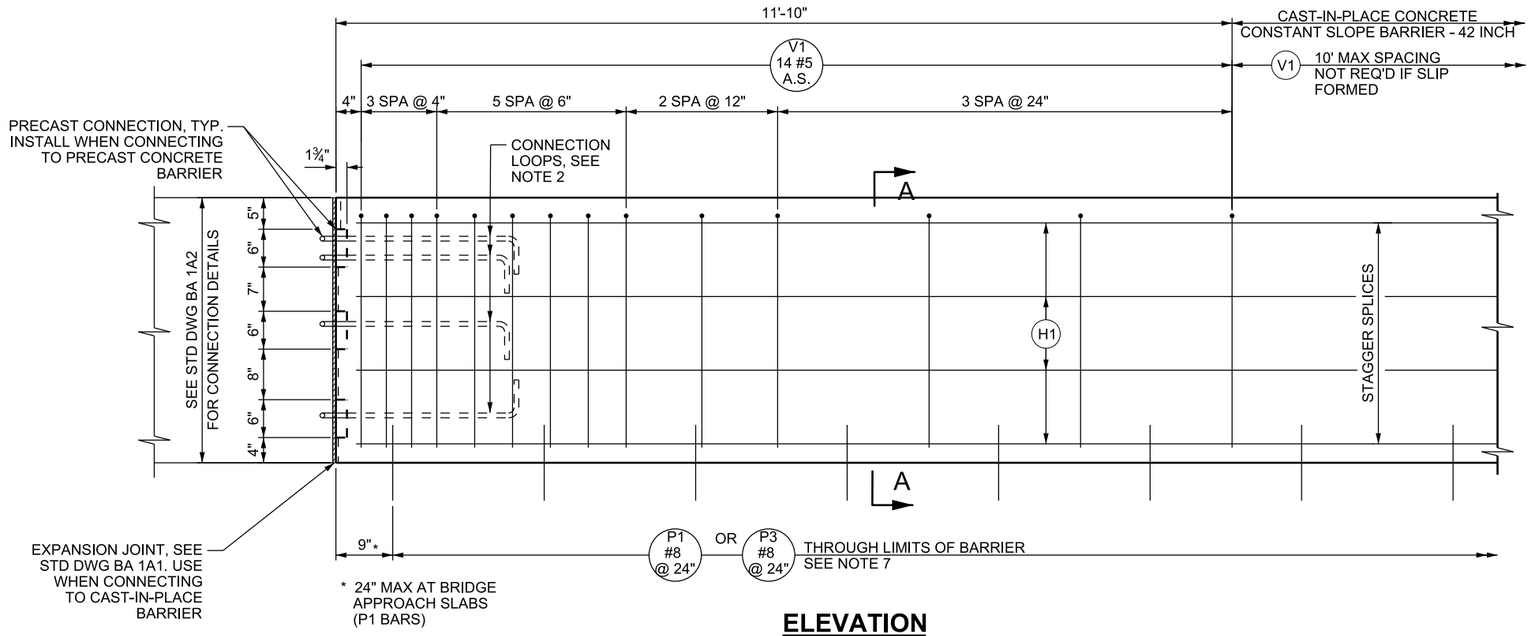

ELEVATION

42" CONSTANT SLOPE BARRIER SHOWN,
STEPPED MEDIAN BARRIER SIMILAR

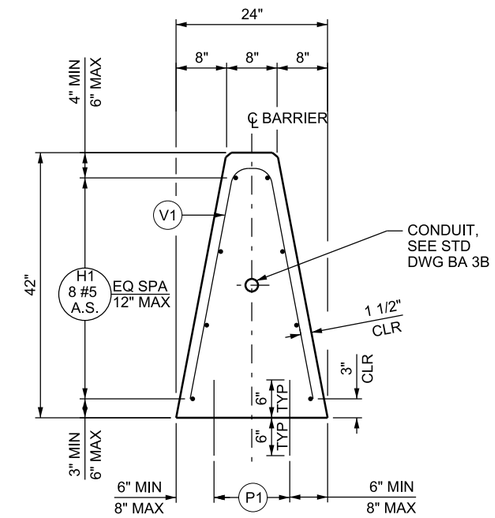

SECTION A-A

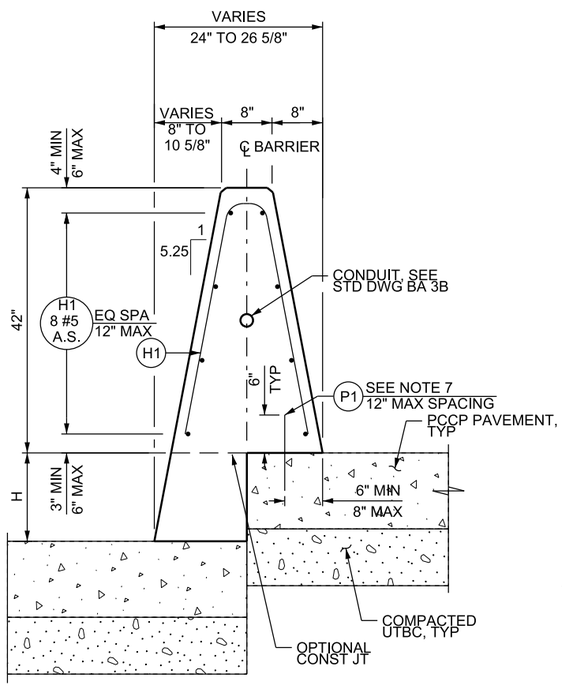

STEPPED MEDIAN BARRIER

H = 0" TO 14" (PCCP ONLY)

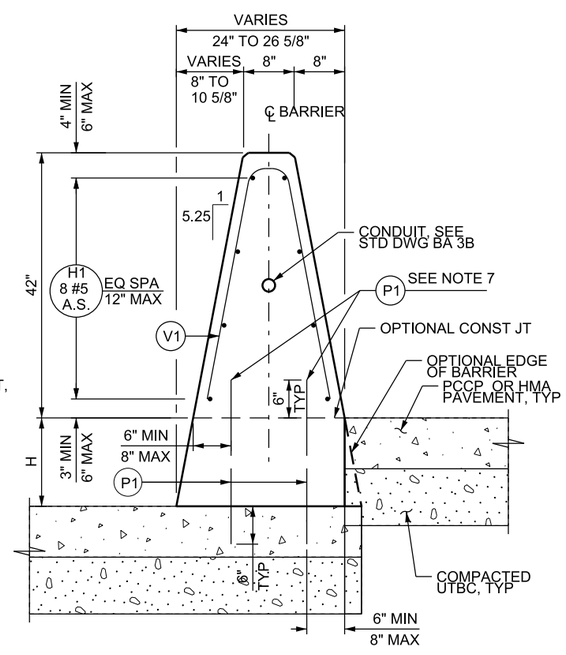

STEPPED MEDIAN BARRIER

H = 0" TO 14" (PCCP HMA)

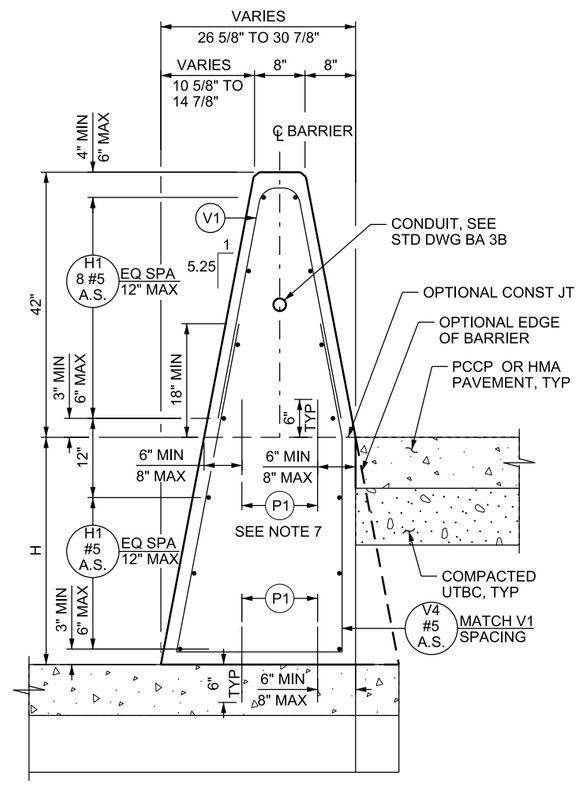

STEPPED MEDIAN BARRIER

H = 14" TO 36"

DESIGN-ONLY NOTES

A. SEE STD DWG BA 1B THROUGH BA 1D FOR TYPICAL LAYOUT REQUIREMENTS.
B. USE THE END SECTION ON THIS SHEET WHEN BARRIER IS OUTSIDE THE MAXIMUM REQUIRED AASHTO CLEAR ZONE FOR OPPOSING TRAFFIC AND FUTURE CONSTRUCTION MAY REQUIRE THE ADDITION OF BARRIER.

NOTES

1. SEE STD DWG BA 1A1 FOR GENERAL NOTES.
2. SEE "BARRIER CONNECTION DETAILS" ON STD DWG BA 1A2 FOR CONNECTION LOOP DETAILS.
3. SEE STD DWG BA 3A2 FOR ADDITIONAL END SECTION DETAILS.
4. SEE STD DWG BA 3A3 FOR REINFORCING SCHEDULE AND NOTES.
5. V4 BAR SPACING MATCHES V1 SPACING SHOWN IN ELEVATION.
6. P1 BARS THROUGH THE OPTIONAL CONSTRUCTION JOINT ARE NOT REQUIRED IF THE CONSTRUCTION JOINT IS NOT USED OR IF THE V4 BARS ARE PRESENT.
7. USE A MAXIMUM OF 12 INCH SPACING FOR P1 BARS. SEE STEPPED MEDIAN BARRIER DETAILS FOR APPLICABLE LOCATION.

NO.	DATE	APPR.	REMARKS

REVISIONS

UTAH DEPARTMENT OF TRANSPORTATION
STANDARD DRAWINGS FOR ROAD AND BRIDGE CONSTRUCTION
SALT LAKE CITY, UTAH

RECOMMENDED FOR APPROVAL — JAN.01, 2017 DATE
CHAIRMAN STANDARDS COMMITTEE APPROVED — JAN.01, 2017 DATE
DEPUTY DIRECTOR

CAST-IN-PLACE
CONCRETE CONSTANT
SLOPE BARRIER -
42 INCH
1 OF 3

STANDARD DRAWING TITLE

STD. DWG. NO.
BA 3A1

DGN File:L:\Standard Drawings\Imperial\2017 Approved\1-All Drawings\BA03A1.dgn
28-NOV-2016

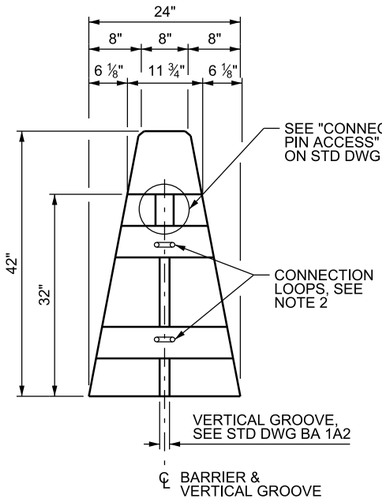

VIEW B - B

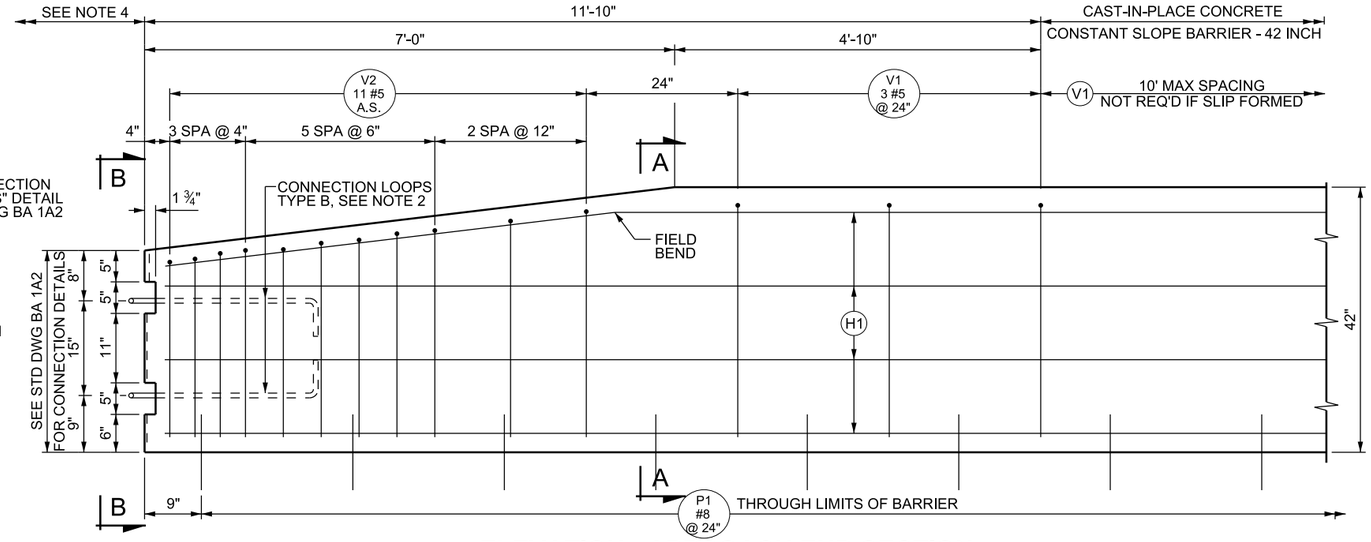

ELEVATION - APPROACH END SECTION

TL-3 SHOWN; TL-5 SIMILAR

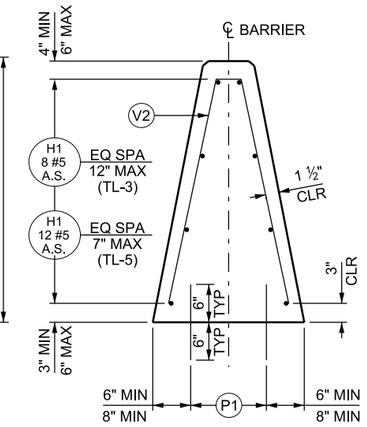

SECTION A - A

TL-3 SHOWN; TL-5 SIMILAR

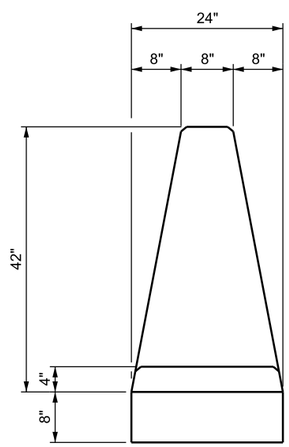

VIEW D - D

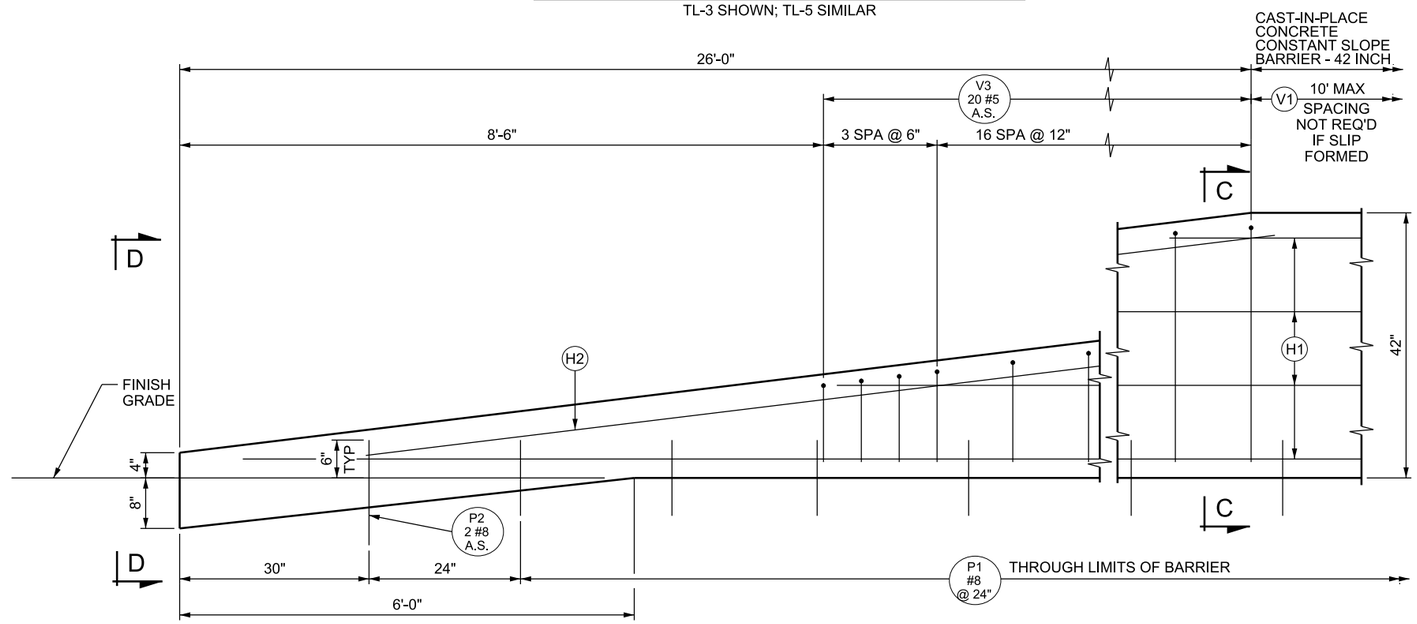

ELEVATION - TRAILING SLOPED END SECTION

TL-3 SHOWN; TL-5 SIMILAR

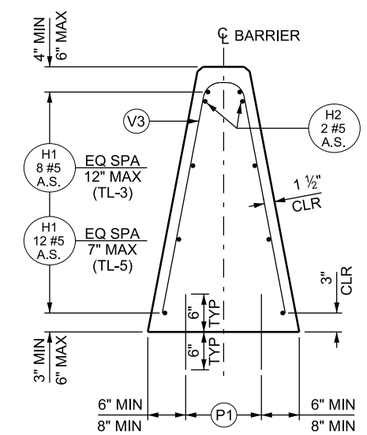

SECTION C - C

TL-3 SHOWN; TL-5 SIMILAR

DESIGN-ONLY NOTES:

A. SEE STD DWG BA 1B THROUGH BA 1D FOR TYPICAL LAYOUT REQUIREMENTS.
B. USE AN APPROACH END SECTION ON THE APPROACH END OF BARRIER WHEN AN END TREATMENT OR CRASH CUSHION IS REQUIRED.
C. USE A TRAILING SLOPED END SECTION ON THE TRAILING END OF BARRIER WHEN THE END IS OUTSIDE THE MAXIMUM REQUIRED AASHTO CLEAR ZONE OF OPPOSING TRAFFIC. USE IS PERMITTED ON APPROACH END WHEN DESIGN SPEED IS 40 MPH OR LESS.

NOTES:

1. SEE STD DWG BA 1A1 FOR GENERAL NOTES.
2. SEE "BARRIER CONNECTION DETAILS" ON STD DWG BA 1A2 FOR CONNECTION LOOP DETAILS.
3. SEE STD DWG BA 3A3 FOR REINFORCING SCHEDULE AND NOTES.
4. USE H1 AND P1 BARS CONSISTENT WITH THE TEST LEVEL RATING OF ADJACENT BARRIER.

REVISIONS

NO.	DATE	APPR.	REMARKS

UTAH DEPARTMENT OF TRANSPORTATION
STANDARD DRAWINGS FOR ROAD AND BRIDGE CONSTRUCTION
SALT LAKE CITY, UTAH

RECOMMENDED FOR APPROVAL — JAN.01.2017 DATE
CHAIRMAN STANDARDS COMMITTEE APPROVED — JAN.01.2017 DATE
DEPUTY DIRECTOR

CAST - IN - PLACE CONCRETE CONSTANT SLOPE BARRIER - 42 INCH 2 OF 3

STANDARD DRAWING TITLE

STD. DWG. NO.
BA 3A2

DGN File: L:\Standard Drawings\Imperial\2017 Approved\1-All Drawings\BA03A2.dgn
28-NOV-2016

CONSTANT SLOPE BARRIER REINFORCING

BAR MARK	BAR SIZE	LOCATION	SKETCH
P1	#8	(BARRIER WITH SCUPPERS) PAVEMENT TO BARRIER THROUGH LIMITS OF BARRIER (VERTICAL)	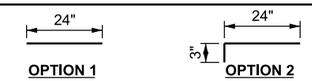
P1	#8	PAVEMENT TO BARRIER THROUGH LIMITS OF BARRIER (VERTICAL)	
P2	#8	PAVEMENT TO BARRIER AT TRAILING SLOPED END SECTION (VERTICAL)	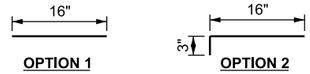
H1	#5	HORIZONTAL IN BARRIER TIED INSIDE V1 BARS CONTINUOUS THROUGH LENGTH OF BARRIER	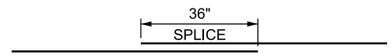
H2	#5	HORIZONTAL IN BARRIER ALONG TOP FACE AT TRAILING SLOPED END SECTION	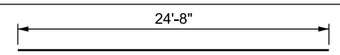
V1	#5	VERTICAL IN BARRIER TOTAL LENGTH: OPTION 1 = 6'-10 1/2" OPTION 2 = 7'-11"	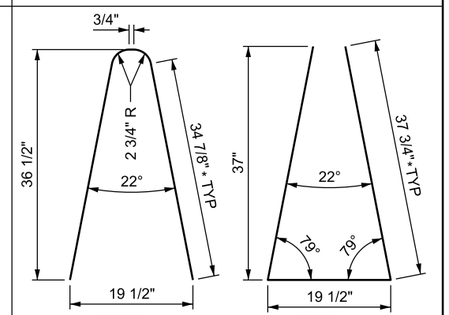
V2	#5	VERTICAL IN APPROACH END SECTION	* VARIES WITH H 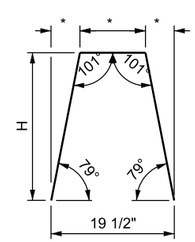
V3	#5	VERTICAL IN TRAILING SLOPED END SECTION	* VARIES WITH H 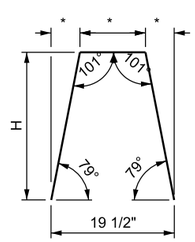

H	QTY
35 1/2"	1
34"	1
32 1/2"	1
32"	1
31"	1
30 1/2"	1
29 1/2"	1
29"	1
28 1/2"	1
28"	1
27 1/2"	1

H	QTY
37"	1
35 1/2"	1
34"	1
32 1/2"	1
31 1/2"	1
30"	1
28 1/2"	1
27"	1
25 1/2"	1
24"	1
22 1/2"	1
21 1/2"	1
20"	1
18 1/2"	1
17"	1
15 1/2"	1
14"	1
13 1/2"	1
12 1/2"	1
12"	1

CONSTANT SLOPE BARRIER REINFORCING

BAR MARK	BAR SIZE	LOCATION	SKETCH
V4	#5	VERTICAL IN STEPPED MEDIAN BARRIER	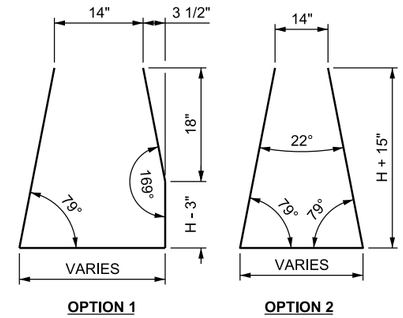

NOTES

1. DRILL AND EPOXY BOND P1 BARS OR HAND POSITION WHILE CONCRETE IS IN A WORKABLE FORM WHEN USING PCCP PAVEMENT,
2. THE ENGINEER APPROVES CONTRACTOR DEVISED METHOD OF POSITIONING THE LONGITUDINAL REINFORCING STEEL ±1/2 INCH AS DIMENSIONED.
3. SEE STD DWG BA 3A1, BA 3A2, AND BA 3A4 FOR REINFORCING STEEL LOCATION.

REVISIONS

NO.	DATE	APPR.	REMARKS

UTAH DEPARTMENT OF TRANSPORTATION
STANDARD DRAWINGS FOR ROAD AND BRIDGE CONSTRUCTION
SALT LAKE CITY, UTAH

RECOMMENDED FOR APPROVAL — JAN.01, 2017 DATE
CHAIRMAN STANDARDS COMMITTEE APPROVED — JAN.01, 2017 DATE
DEPUTY DIRECTOR

CAST-IN-PLACE CONCRETE CONSTANT SLOPE BARRIER - 42 INCH 3 OF 3
STANDARD DRAWING TITLE

STD. DWG. NO.
BA 3A3

28-NOV-2016 DGN File:L:\Standard_Drawings\Imperial\2017 Approved\1-All Drawings\BA03A3.dgn

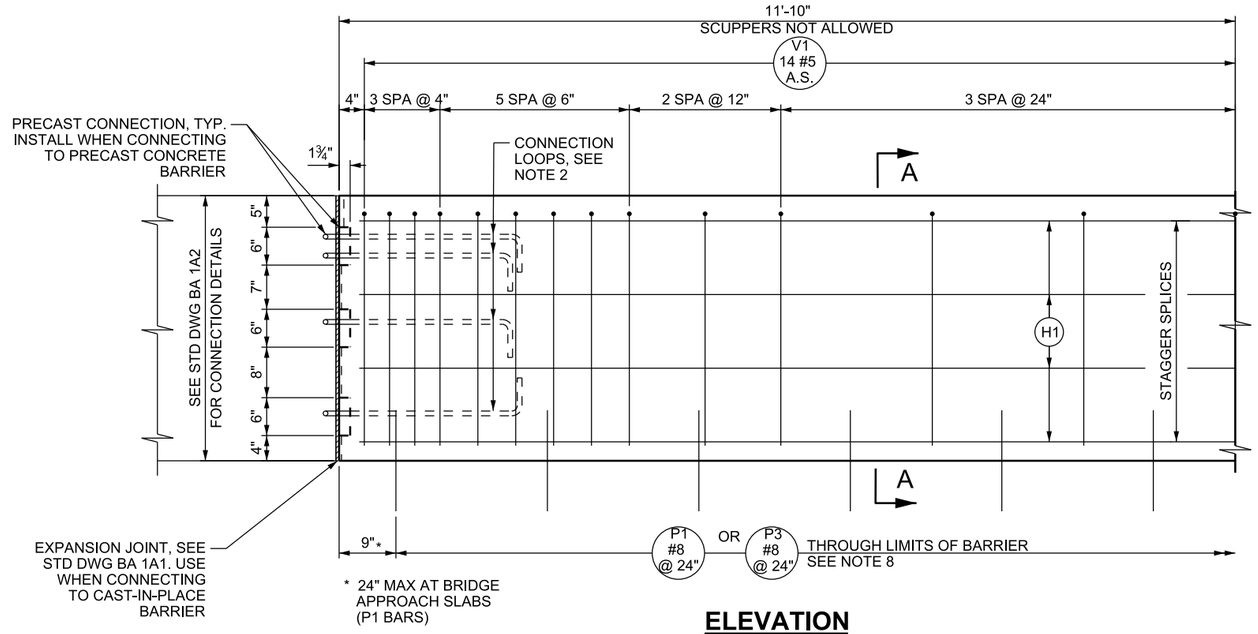

ELEVATION

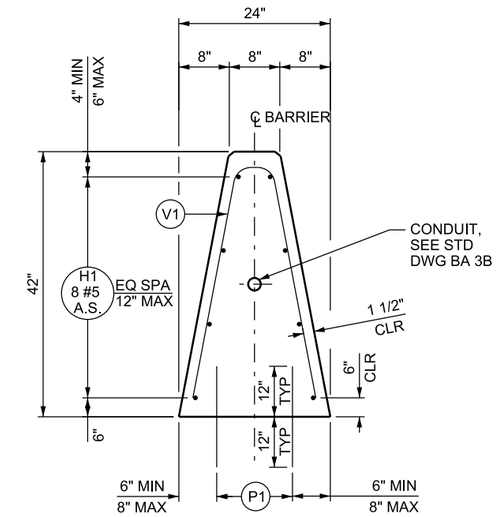

SECTION A-A

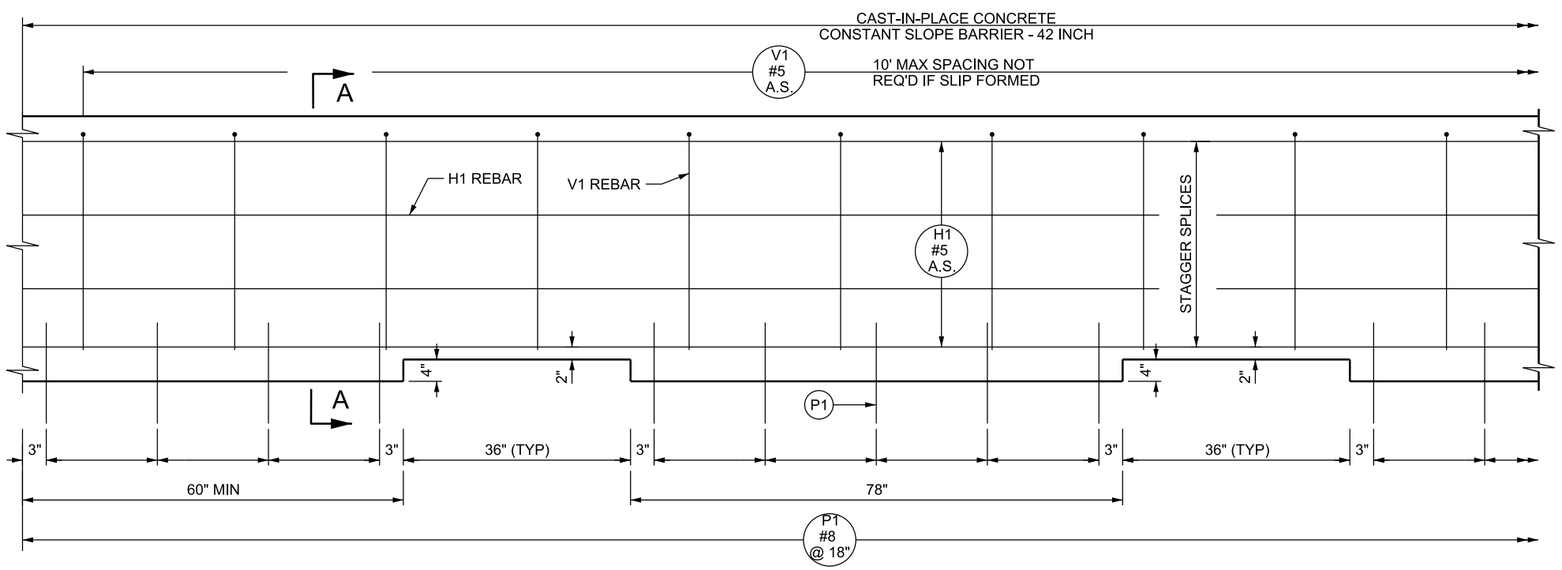

ELEVATION

DESIGN-ONLY NOTES:

A. SEE STD DWG BA 1B THROUGH BA 1D FOR TYPICAL LAYOUT REQUIREMENTS.

B. INDICATE ON PLAN SET WHEN BARRIER SECTIONS WITH SCUPPERS ARE REQUIRED.

NOTES:

1. SEE "BARRIER CONNECTION DETAILS" ON STD DWG BA 1A2 FOR CONNECTION LOOP DETAILS.
2. DRILL AND EPOXY BOND P1 BARS OR HAND POSITION WHILE CONCRETE IS IN A WORKABLE FORM WHEN USING PCCP PAVEMENT.
3. THE ENGINEER APPROVES CONTRACTOR DEVISED METHOD OF POSITIONING THE LONGITUDINAL REINFORCING STEEL ±1/2 INCH AS DIMENSIONED.
4. SEE STD DWG BA 3A3 FOR REINFORCING SCHEDULE AND NOTES.
5. PROVIDE SCUPPERS AS SHOWN.
6. DO NOT USE BARRIER SEAL WHEN SCUPPERS ARE PRESENT ON BARRIER.
7. SEE STD DWG BA 3A2 FOR APPROACH AND TRAILING END TREATMENTS. NO EXPANSION JOINT REQUIRED.
8. SEE STD DWG BA 1A1 FOR GENERAL NOTES.

REVISIONS

NO.	DATE	APPR.	REMARKS

UTAH DEPARTMENT OF TRANSPORTATION
STANDARD DRAWINGS FOR ROAD AND BRIDGE CONSTRUCTION
SALT LAKE CITY, UTAH

RECOMMENDED FOR APPROVAL — JAN.01, 2017 DATE
CHAIRMAN STANDARDS COMMITTEE APPROVED — JAN.01, 2017 DATE
DEPUTY DIRECTOR

CAST-IN-PLACE CONCRETE CONSTANT SLOPE BARRIER WITH SCUPPERS - 42 INCH

STANDARD DRAWING TITLE

STD. DWG. NO.
BA 3A4

DGN File:L:\Standard Drawings\Imperial\2017 Approved\1-All Drawings\BA03A4.dgn
28-NOV-2016

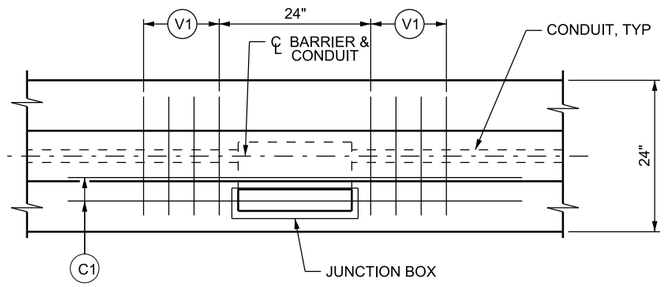

PLAN

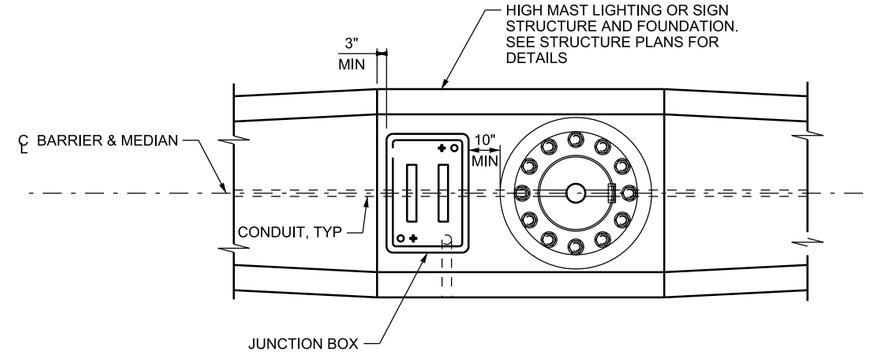

PLAN

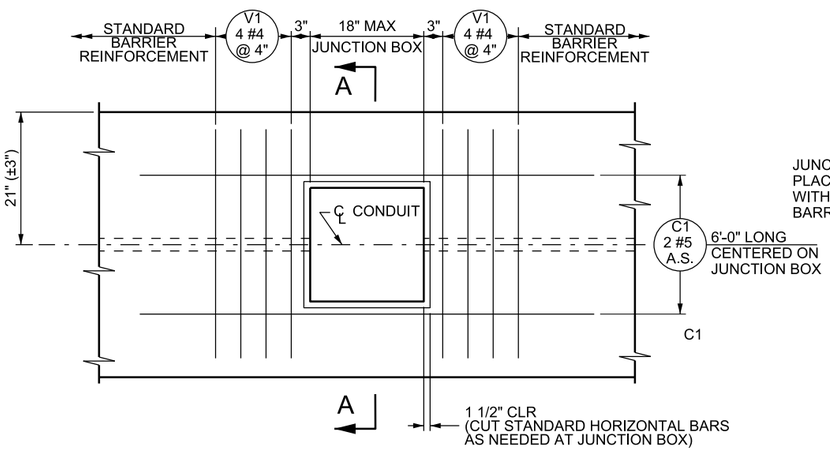

ELEVATION

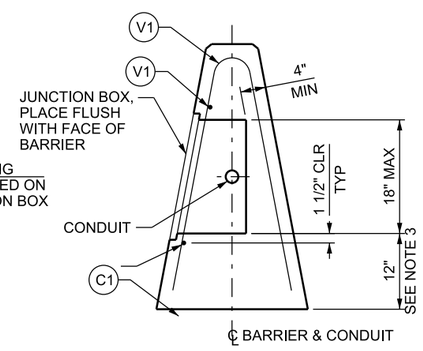

SECTION A-A

MEDIAN BARRIER CONDUIT

STANDARD REINFORCEMENT NOT SHOWN

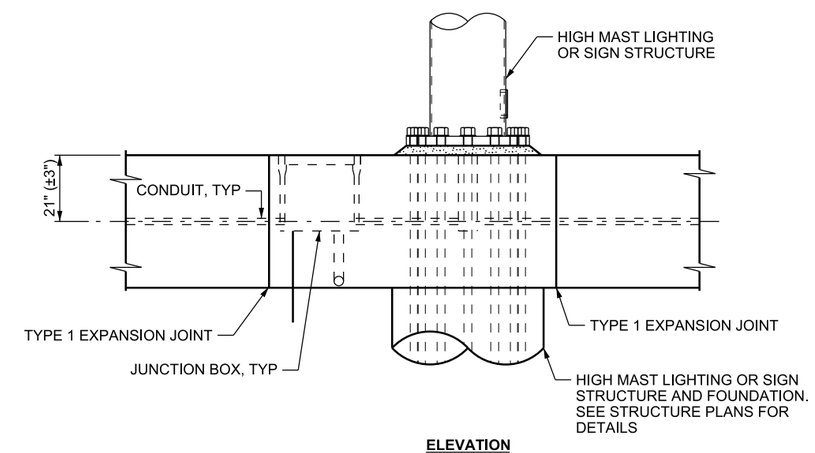

ELEVATION

MEDIAN BARRIER CONDUIT AT SIGN OR LIGHT STRUCTURE

DESIGN-ONLY NOTES:

A. SEE STD DWG BA 1B THROUGH BA 1D FOR TYPICAL LAYOUT REQUIREMENTS.

NOTES:

1. SEE STD DWG BA 1A1 FOR GENERAL NOTES.
2. INSTALL ELECTRICAL AND ATMS CONDUITS, JUNCTION BOXES, AND PULL BOXES PER CONTRACT DRAWINGS.
3. INCREASE HEIGHT TO ACCOUNT FOR STEPPED MEDIAN. MAINTAIN 12 INCHES TO TOP OF PAVEMENT ON THE HIGHEST SIDE.

REVISIONS

NO.	DATE	APPR.	REMARKS

UTAH DEPARTMENT OF TRANSPORTATION

STANDARD DRAWINGS FOR ROAD AND BRIDGE CONSTRUCTION

SALT LAKE CITY, UTAH

RECOMMENDED FOR APPROVAL — JAN.01.2017 DATE

CHAIRMAN STANDARDS COMMITTEE APPROVED — JAN.01.2017 DATE

DEPUTY DIRECTOR

CAST-IN-PLACE CONCRETE CONSTANT SLOPE BARRIER - 42 INCH, ELECTRICAL DETAILS

STANDARD DRAWING TITLE

STD. DWG. NO.

BA 3B

28-NOV-2016 DGN File:L:\Standard Drawings\Imperial\2017 Approved\1-All Drawings\BA03B.dgn

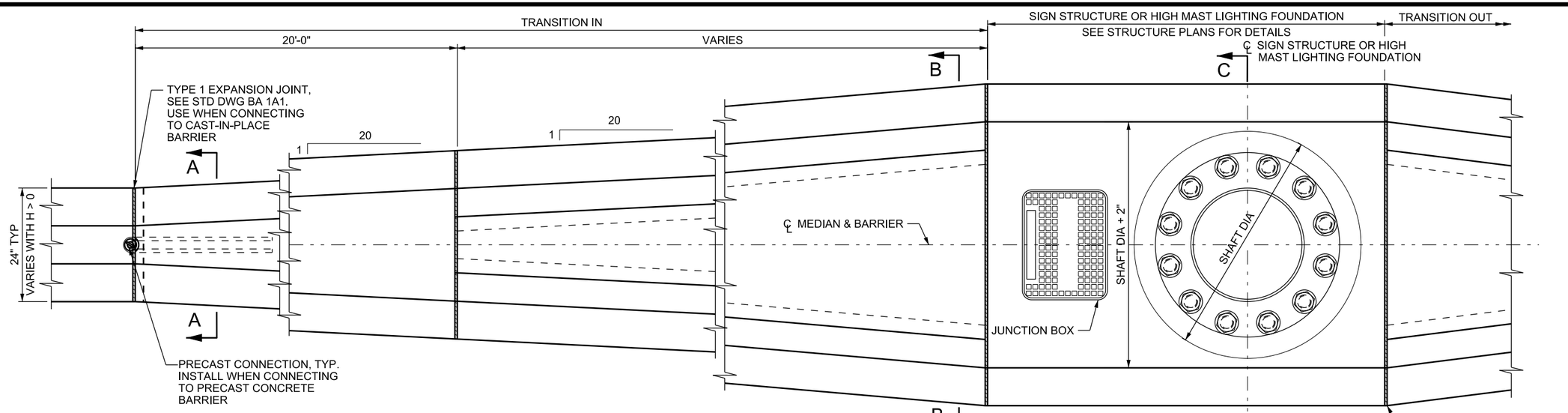

PARTIAL PLAN

TRANSITION IN AND OUT ARE SYMMETRICAL ABOUT
SIGN STRUCTURE OR HIGH MAST LIGHTING FOUNDATION

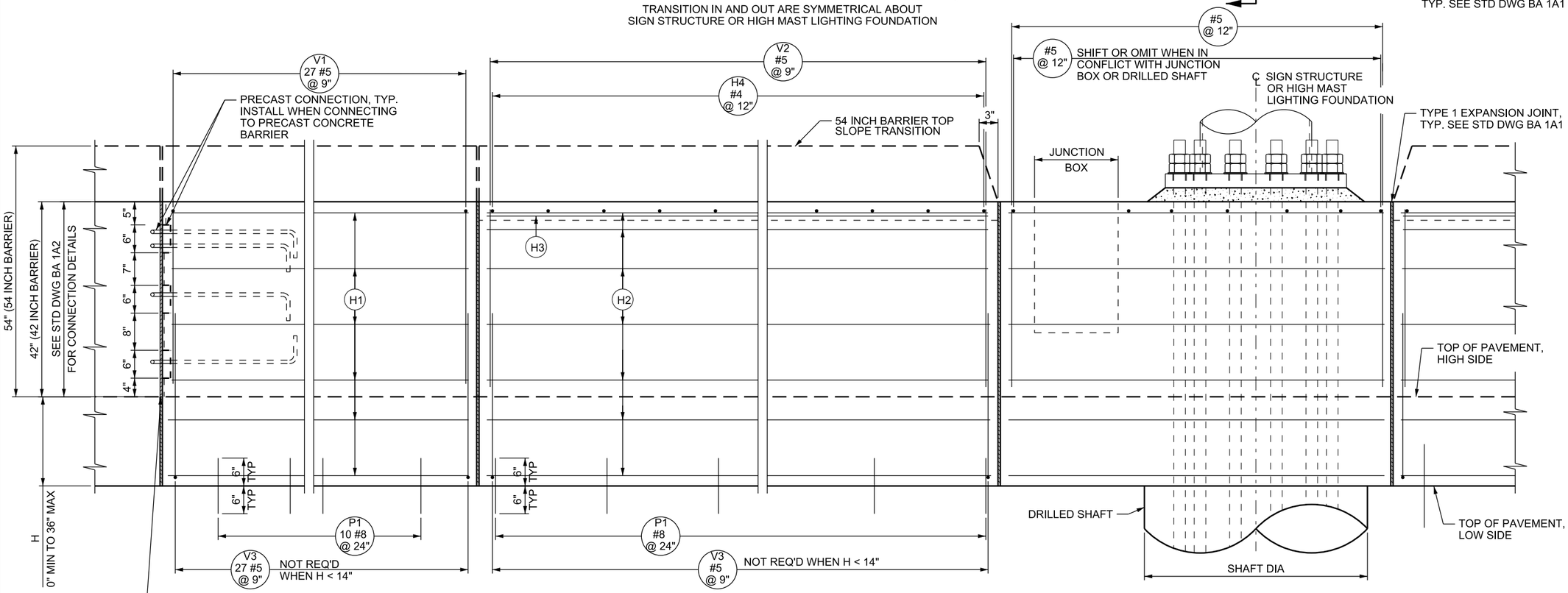

PARTIAL ELEVATION

TRANSITION IN AND OUT ARE SYMMETRICAL ABOUT
SIGN STRUCTURE OR HIGH MAST LIGHTING FOUNDATION;
REINFORCEMENT FOR 42 INCH BARRIER SHOWN, 54 INCH BARRIER SIMILAR

DESIGN-ONLY NOTES:

A. SEE STD DWG BA 1B THROUGH BA 1D FOR TYPICAL LAYOUT REQUIREMENTS.
B. INCREASE LENGTH OF WIDTH TAPER AS NECESSARY TO PROVIDE APPROPRIATE FLARE RATE PER ROADSIDE DESIGN GUIDE. ADJUST REINFORCEMENT LENGTHS AS NECESSARY.

NOTES:

1. SEE STD DWG BA 1A1 FOR GENERAL NOTES.
2. INSTALL ELECTRICAL AND ATMS CONDUITS, JUNCTION BOXES AND PULL BOXES ACCORDING TO CONTRACT DRAWINGS.
3. SEE STD DWG BA 3C2 FOR SECTIONS AND REINFORCING SCHEDULE.

REVISIONS

NO.	DATE	APPR.	REMARKS

UTAH DEPARTMENT OF TRANSPORTATION
STANDARD DRAWINGS FOR ROAD AND BRIDGE CONSTRUCTION
SALT LAKE CITY, UTAH

RECOMMENDED FOR APPROVAL — JAN.01.2017 DATE
CHAIRMAN STANDARDS COMMITTEE APPROVED — JAN.01.2017 DATE
DEPUTY DIRECTOR

CAST-IN-PLACE CONCRETE CONSTANT SLOPE BARRIER - 42 INCH, SIGN STRUCTURE FOUNDATION TRANSITION 1 OF 2

STANDARD DRAWING TITLE

STD. DWG. NO.
BA 3C1

DGN File: L:\Standard Drawings\Imperial\2017 Approved\1-All Drawings\BA03C1.dgn
28-NOV-2016

BAR MARK	BAR SIZE	LOCATION	SKETCH
P1	#8	PAVEMENT TO BARRIER THROUGH LIMITS OF BARRIER (VERTICAL)	12" OPTION 1; 3" 12" OPTION 2
H1	#5	HORIZONTAL IN BARRIER	19'-4"
H2	#5	HORIZONTAL IN BARRIER	VARIES
H3	#4	HORIZONTAL IN TOP CLOSURE SLAB	VARIES
H4	#4	HORIZONTAL IN TOP CLOSURE SLAB	VARIES

BAR MARK	BAR SIZE	LOCATION	SKETCH
V1	#5	VERTICAL IN BARRIER	7⅛" VARIES 7⅛"; 37 1/2"; 101°, 101°, 79°, 79°; 42 INCH BARRIER
			8¼" VARIES 8¼"; 49 1/2"; 99.5°, 99.5°, 80.5°, 80.5°; 54 INCH BARRIER

BAR MARK	BAR SIZE	LOCATION	SKETCH
V2	#5	VERTICAL IN BARRIER	4"; VARIES; VARIES
V3	#5	VERTICAL IN STEPPED MEDIAN BARRIER	14" VARIES 14"; 18"; H - 3"; H + 15"; VARIES; VARIES

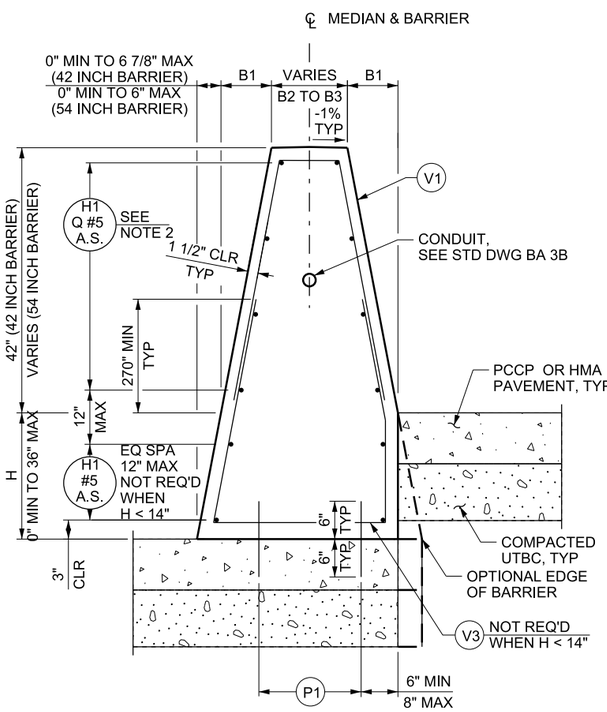

SECTION A-A

SEE NOTE 3 FOR ALTERNATE SECTION WHEN H<14" AND PCCP

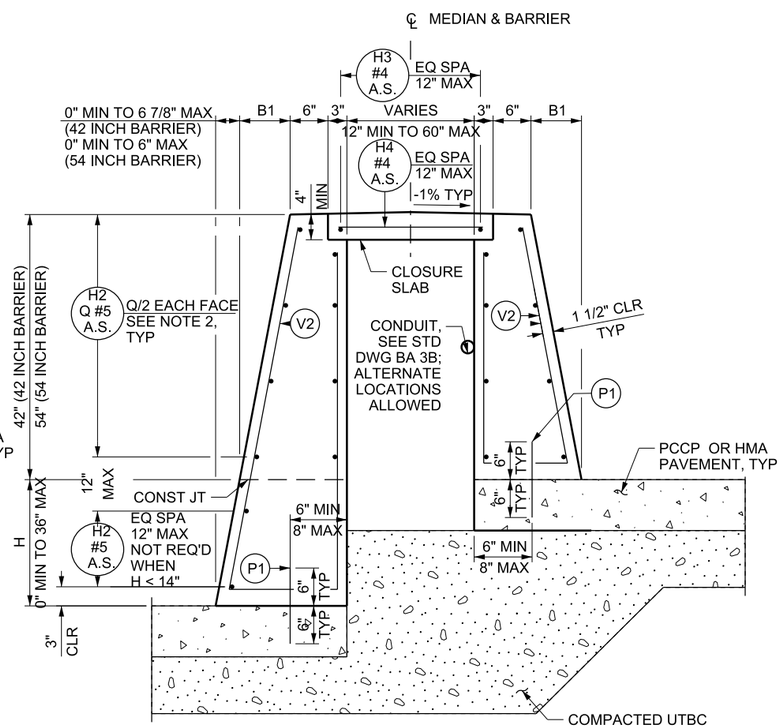

SECTION B-B

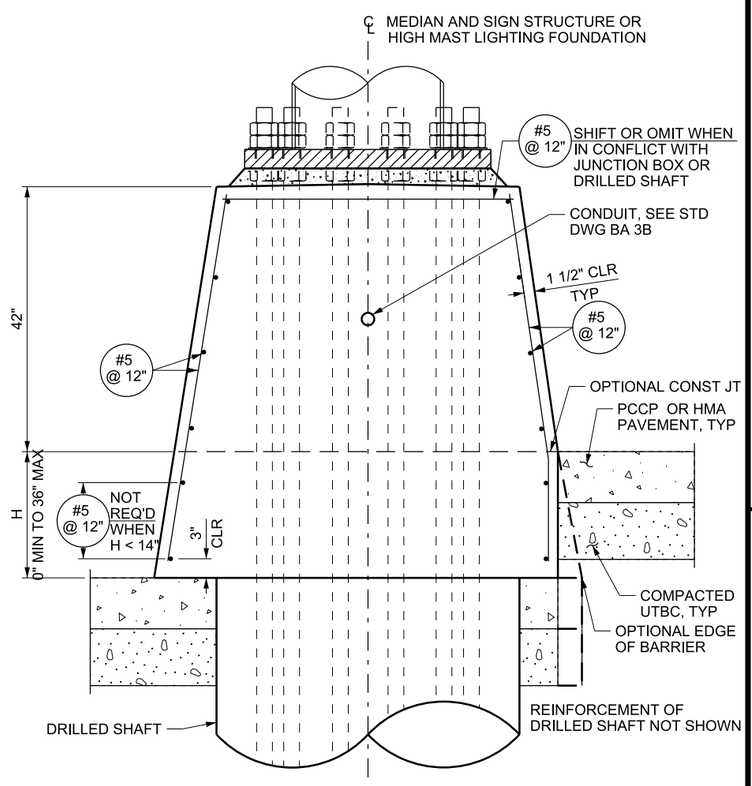

SECTION C-C

BARRIER	B1	B2	B3	Q
42 INCH	8"	8"	32"	8
54 INCH	9"	6"	30"	10
42 INCH, TL-5	8"	8"	32"	12
54 INCH, TL-5	9"	6"	30"	14

NOTES

1. SEE STD DWG BA 3C1 FOR SECTION LOCATIONS.
2. REINFORCEMENT FOR 42 INCH BARRIER SHOWN, REINFORCEMENT FOR 54 INCH BARRIER SIMILAR.
3. SECTION A-A MAY BE REPLACED WITH TYPICAL SECTIONS FOR H LESS THAN 14 INCHES SHOWN ON STD DWG BA 3A1, BA 3E2, BA 3M1, OR BA 3O2 WITH THE FOLLOWING MODIFICATIONS: VARY THE TOP WIDTH FROM B2 TO B3 AND MODIFY V1 BAR AS REQUIRED TO MAINTAIN MINIMUM COVER.

REVISIONS

NO.	DATE	APPR.	REMARKS

UTAH DEPARTMENT OF TRANSPORTATION
STANDARD DRAWINGS FOR ROAD AND BRIDGE CONSTRUCTION
SALT LAKE CITY, UTAH

RECOMMENDED FOR APPROVAL — JAN.01, 2017 DATE
CHAIRMAN STANDARDS COMMITTEE APPROVED — JAN.01, 2017 DATE
DEPUTY DIRECTOR

CAST-IN-PLACE CONCRETE CONSTANT SLOPE BARRIER - 42 INCH, SIGN STRUCTURE FOUNDATION TRANSITION 2 OF 2

STANDARD DRAWING TITLE

STD. DWG. NO.
BA 3C2

DGN File:L:\Standard_Drawings\Imperial\2017 Approved\1-All Drawings\BA03C2.dgn
28-NOV-2016

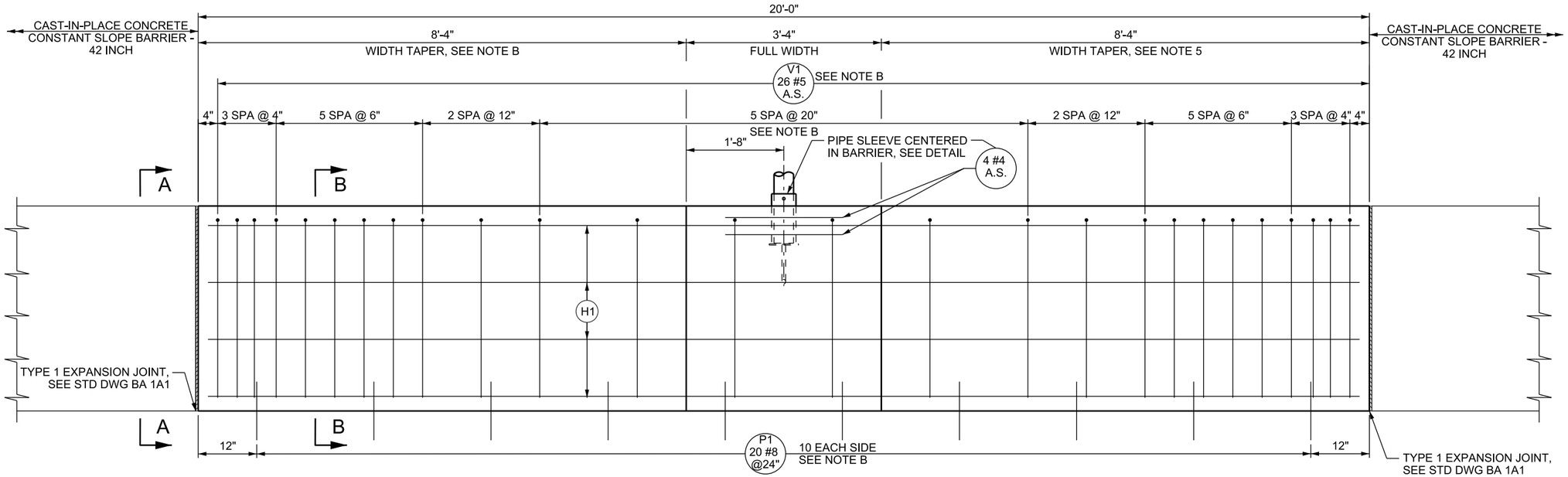

ELEVATION

TL-3 SHOWN; TL-5 SIMILAR

BAR MARK	BAR SIZE	NO. BARS	LOCATION	SKETCH
P1	#8	20	PAVEMENT TO BARRIER (VERTICAL)	TL-3: 12" OPTION 1; 12", 3" OPTION 2 — TL-5: 24" OPTION 1; 24", 3" OPTION 2
H1	#5	8 (TL-3) 12 (TL-5)	HORIZONTAL IN BARRIER TIED TO INSIDE OF V1 BARS	8'-2 1/2", 3'-4", 8'-2 1/2", 5"
V1	#5	26	VERTICAL IN BARRIER	OPTION 1 (22°, 37") — OPTION 2 (79°, 79°)

W	QTY
6"	2
6 1/2"	4
7"	2
7 1/2"	2
8 1/2"	2
9"	2
9 1/2"	2
10"	2
11 1/2"	2
12 1/2"	2
14 1/2"	2
15 1/2"	2

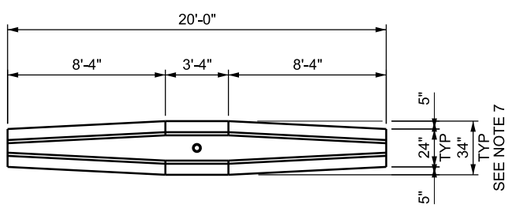

PLAN

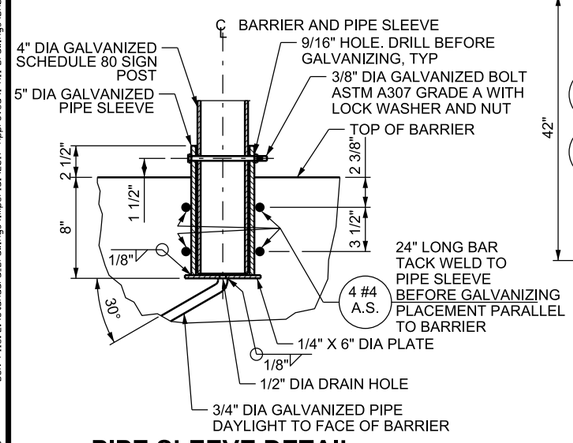

PIPE SLEEVE DETAIL

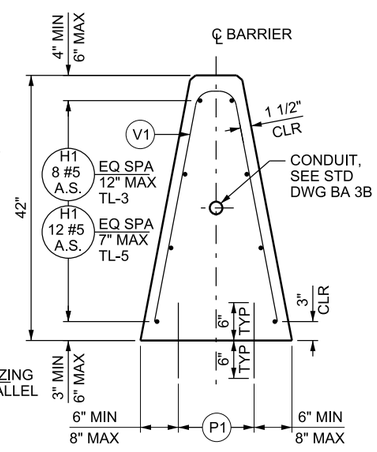

SECTION B-B

TL-3 SHOWN; TL-5 SIMILAR

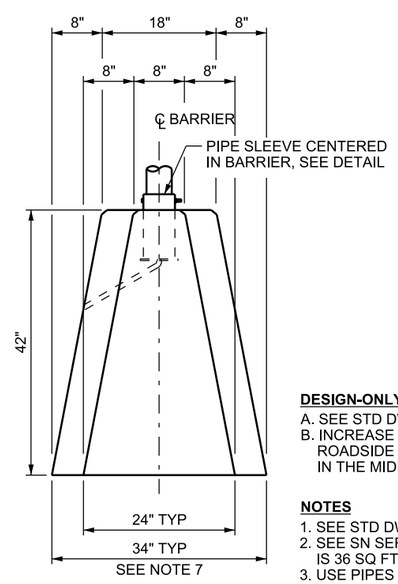

VIEW A-A

DESIGN-ONLY NOTES

A. SEE STD DWG BA 1B THROUGH BA 1D FOR TYPICAL LAYOUT REQUIREMENTS.
B. INCREASE LENGTH OF WIDTH TAPER AS NECESSARY TO PROVIDE APPROPRIATE FLARE RATE PER ROADSIDE DESIGN GUIDE. ADJUST REINFORCEMENT LENGTHS AS NECESSARY. ADD P1 AND V1 BARS IN THE MIDDLE OF THE BARRIER TO MAINTAIN MAXIMUM SPACING.

NOTES

1. SEE STD DWG BA 1A1 FOR GENERAL NOTES.
2. SEE SN SERIES STD DWG FOR SIGN MOUNTING, HARDWARE, AND PLACEMENT REQUIREMENTS. MAXIMUM SIGN PANEL AREA IS 36 SQ FT.
3. USE PIPES CONFORMING TO ASTM A 53 GRADE B, ASTM A 500 GRADE B, OR ASTM API 5L GRADE B/X42. GALVANIZE IN ACCORDANCE WITH ASTM A 123 AFTER FABRICATION IS COMPLETED.
4. DRILL AND EPOXY BOND P1 BARS OR HAND POSITION WHILE CONCRETE IS IN A WORKABLE FORM WHEN USING PCCP PAVEMENT.
5. USE H1 AND P1 BARS CONSISTENT WITH THE TEST LEVEL RATING OF ADJACENT BARRIER.
6. TYPICAL SECTION SHOWN. VARY WIDTH AS SHOWN IF MEDIAN BARRIER IS STEPPED. REFER TO STD DWG BA 3A1 OR BA 3E2 AND ADJUST V4 BARS SIMILAR TO V1 BAR ADJUSTMENTS.

REVISIONS

NO.	DATE	APPR.	REMARKS

UTAH DEPARTMENT OF TRANSPORTATION
STANDARD DRAWINGS FOR ROAD AND BRIDGE CONSTRUCTION
SALT LAKE CITY, UTAH

RECOMMENDED FOR APPROVAL — JAN.01.2017 DATE
CHAIRMAN STANDARDS COMMITTEE APPROVED — JAN.01.2017 DATE
DEPUTY DIRECTOR

CAST-IN-PLACE CONCRETE CONSTANT SLOPE BARRIER - 42 INCH, MEDIAN SMALL SIGN SECTION

STANDARD DRAWING TITLE

STD. DWG. NO.
BA 3D

28-NOV-2016
DGN File:L:\Standard_Drawings\Imperial\2017 Approved\1-All Drawings\BA03D.dgn

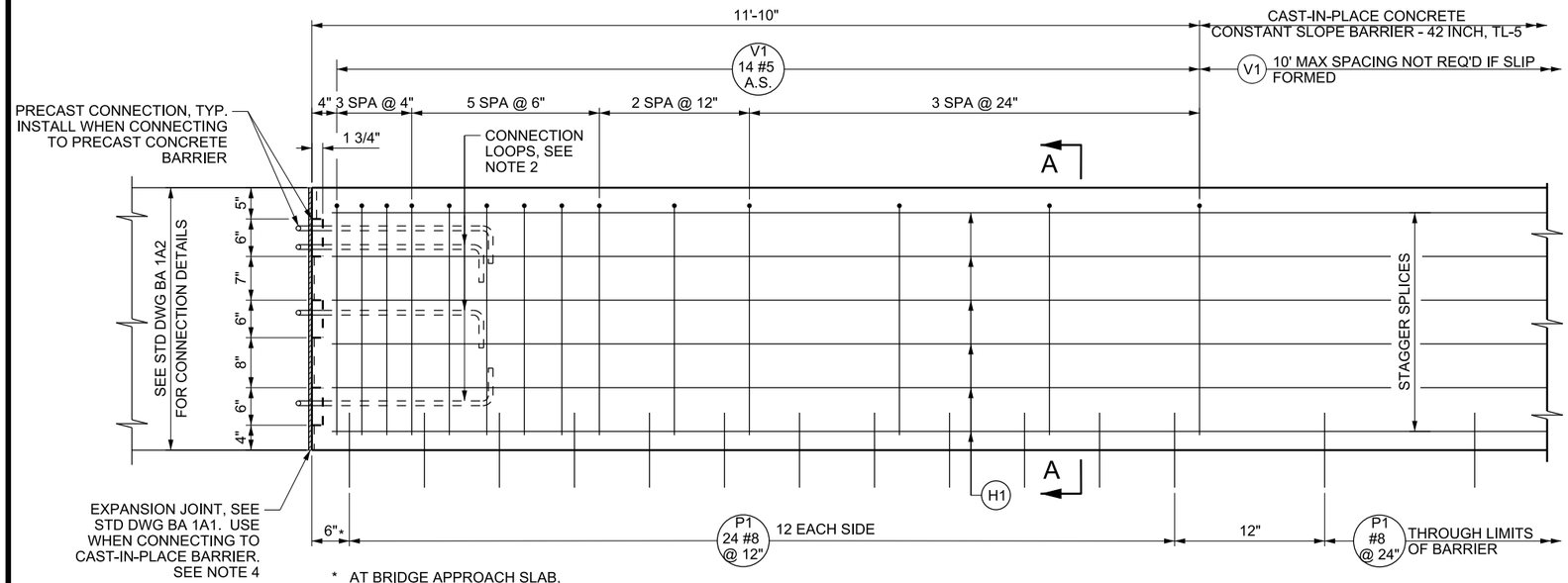

* AT BRIDGE APPROACH SLAB, PLACE P1 BAR 2" FROM EDGE OF PCCP

ELEVATION

BARRIER ON PCCP

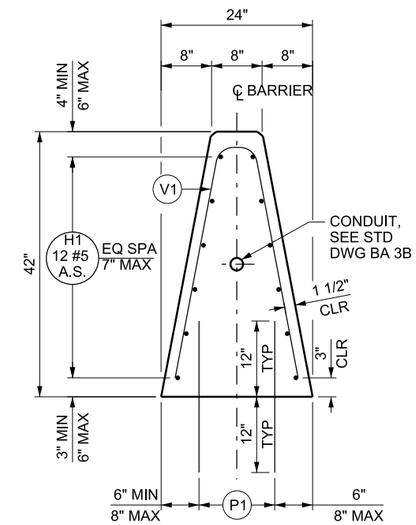

SECTION A-A

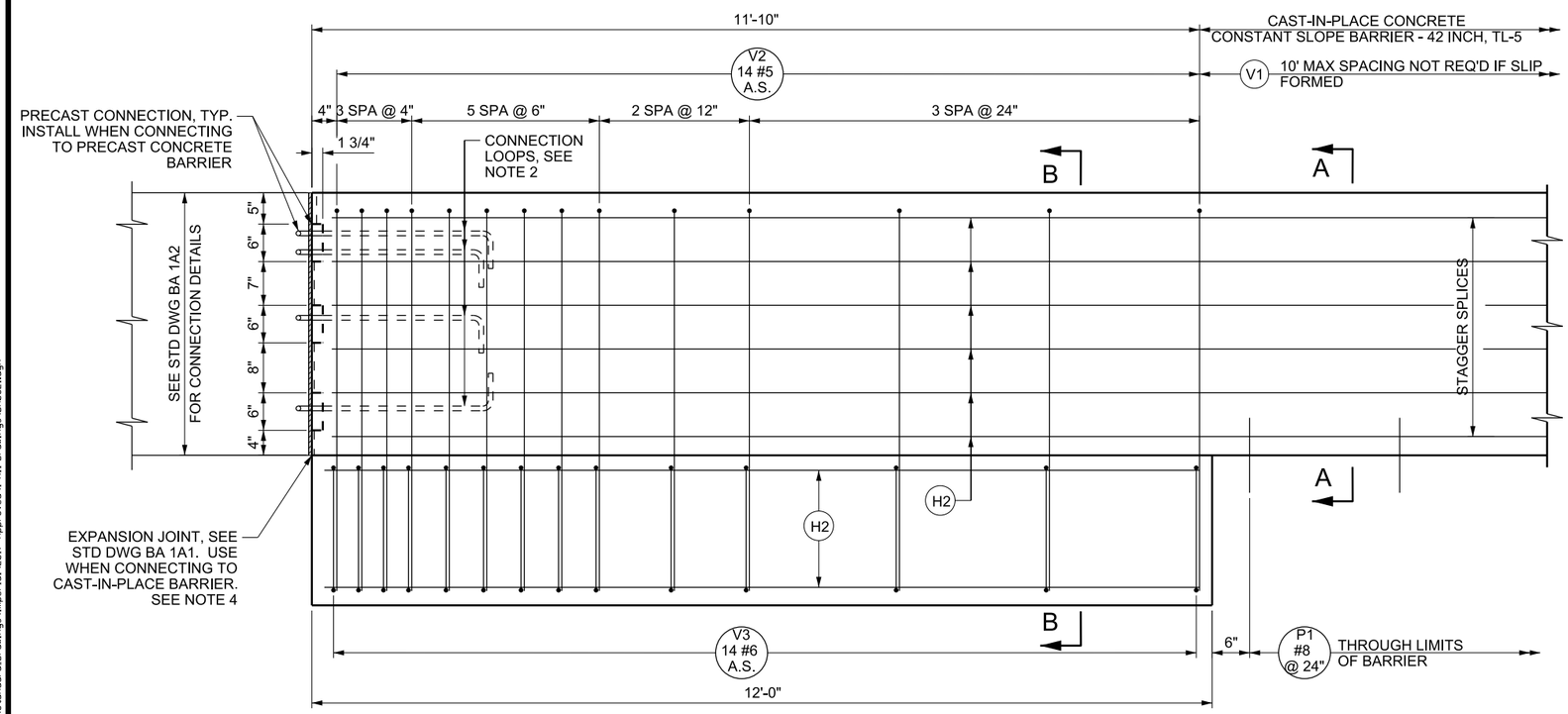

ELEVATION

BARRIER ON HMA

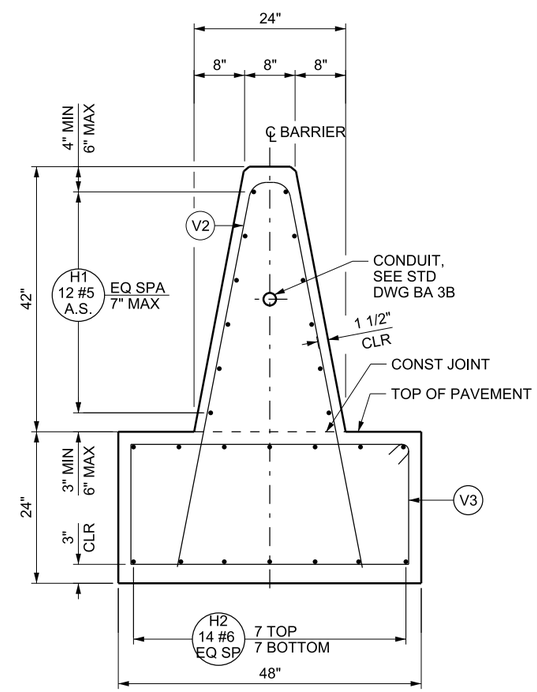

SECTION B-B

DESIGN-ONLY NOTES:

A. SEE STD DWG BA 1B THROUGH BA 1D FOR TYPICAL LAYOUT REQUIREMENTS.

NOTES:

1. SEE STD DWG BA 1A1 FOR GENERAL NOTES.
2. SEE "BARRIER CONNECTION DETAILS" ON STD DWG BA 1A2 FOR CONNECTION LOOP DETAILS.
3. SEE STD DWG BA 3E2 FOR STEPPED MEDIAN DETAILS AND REINFORCING SCHEDULE.
4. SEE STD DWG BA 3A2 FOR APPROACH AND TRAILING END TREATMENTS. NO EXPANSION JOINT REQUIRED.

NO.	DATE	APPR.	REMARKS

REVISIONS

UTAH DEPARTMENT OF TRANSPORTATION
STANDARD DRAWINGS FOR ROAD AND BRIDGE CONSTRUCTION
SALT LAKE CITY, UTAH

RECOMMENDED FOR APPROVAL — JAN.01.2017 DATE
CHAIRMAN STANDARDS COMMITTEE APPROVED — JAN.01.2017 DATE
DEPUTY DIRECTOR

CAST-IN-PLACE CONCRETE CONSTANT SLOPE BARRIER - 42 INCH, TL-5 1 OF 2

STANDARD DRAWING TITLE

STD. DWG. NO.

BA 3E1

DGN File:L:\Standard Drawings\Imperial\2017 Approved\1-All Drawings\BA03E1.dgn

28-NOV-2016

CONSTANT SLOPE BARRIER REINFORCING

BAR MARK	BAR SIZE	LOCATION	SKETCH
P1	#8	PAVEMENT TO BARRIER THROUGH LIMITS OF BARRIER (VERTICAL)	24" OPTION 1; 24", 3" OPTION 2
H1	#5	HORIZONTAL IN BARRIER TIED INSIDE V1 BARS CONTINUOUS THROUGH LENGTH OF BARRIER	36" SPLICE
H2	#6	HORIZONTAL IN BARRIER FOOTING	11'-8"
V1	#5	VERTICAL IN BARRIER TOTAL LENGTH: OPTION 1 = 6'-10 1/2" OPTION 2 = 7'-11"	3/4", 2 3/4" R, 22°, 36 1/2", 34 7/8" TYP, 19 1/2" OPTION 1; 37", 22°, 79°, 79°, 37 3/4" TYP, 19 1/2" OPTION 2
V2	#5	VERTICAL IN BARRIER TOTAL LENGTH: 10'-11 1/2"	3/4", 2 3/4" R, 22°, 60 1/2", 59 3/8" TYP, 29 1/8"
V3	#6	VERTICAL IN BARRIER FOOTING TOTAL LENGTH: 11'-10"	44", 19", STANDARD 135° BEND
V4	#5	VERTICAL IN STEPPED MEDIAN BARRIER	14", 3 1/2", 18", 16°, 79°, H - 3", VARIES OPTION 1; 14", 22°, 79°, 79°, H + 15", VARIES OPTION 2

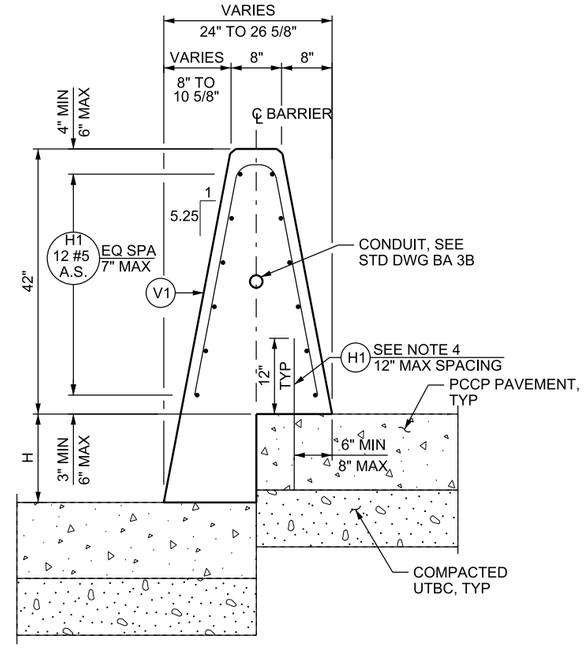

STEPPED MEDIAN BARRIER - PCCP ONLY

H = 0" TO 14" (OPTION 1)

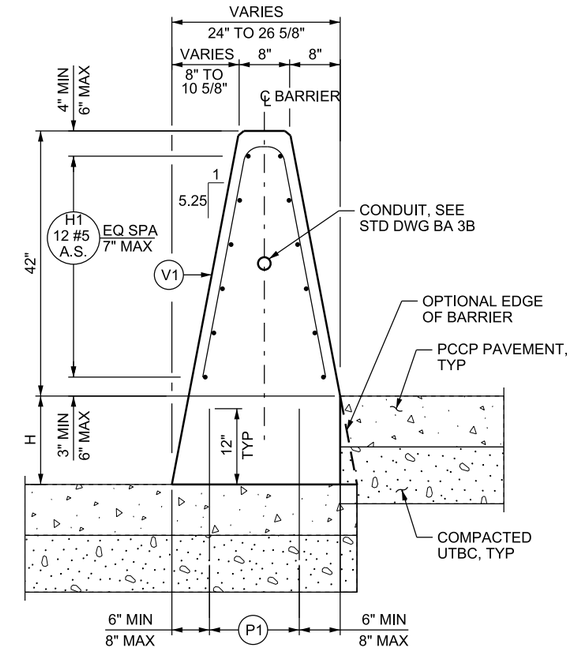

STEPPED MEDIAN BARRIER - PCCP ONLY

H = 0" TO 14" (OPTION 2)

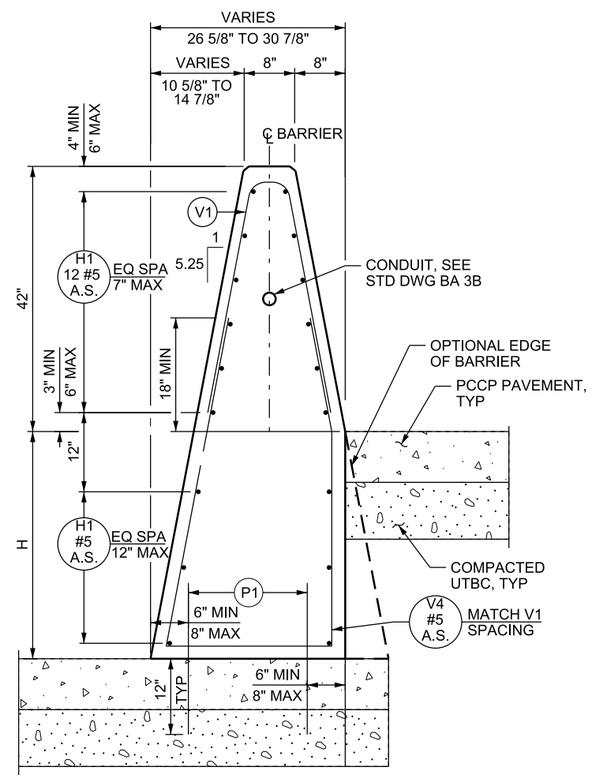

STEPPED MEDIAN BARRIER - PCCP ONLY

H = 14" TO 36"

NOTES

1. DRILL AND EPOXY BOND P1 BARS OR HAND POSITION WHILE CONCRETE IS IN A WORKABLE FORM WHEN USING PCCP PAVEMENT.
2. THE ENGINEER APPROVES CONTRACTOR DEVISED METHOD OF POSITIONING THE LONGITUDINAL REINFORCING STEEL ±1/2 INCH AS DIMENSIONED.
3. V4 BAR SPACING MATCHES V1 SPACING SHOWN IN ELEVATION.
4. DECREASE P1 BAR SPACING BY HALF AS SHOWN ON STD DWG BA 3E1. SEE STEPPED MEDIAN BARRIER DETAILS FOR APPLICABLE LOCATION.
5. DO NOT USE STEPPED MEDIAN BARRIER WITH HMA PAVEMENT.
6. DO NOT USE HOIZONTAL CONSTRUCTION JOINTS IN TL-5 BARRIER.

REVISIONS

NO.	DATE	APPR.	REMARKS

UTAH DEPARTMENT OF TRANSPORTATION
STANDARD DRAWINGS FOR ROAD AND BRIDGE CONSTRUCTION
SALT LAKE CITY, UTAH

RECOMMENDED FOR APPROVAL — JAN.01.2017 DATE
CHAIRMAN STANDARDS COMMITTEE APPROVED — JAN.01.2017 DATE
DEPUTY DIRECTOR

CAST-IN-PLACE CONCRETE CONSTANT SLOPE BARRIER - 42 INCH, TL-5 2 OF 2
STANDARD DRAWING TITLE

STD. DWG. NO.
BA 3E2

DGN File:L:\Standard Drawings\Imperial\2017 Approved\1-All Drawings\BA03E2.dgn
28-NOV-2016

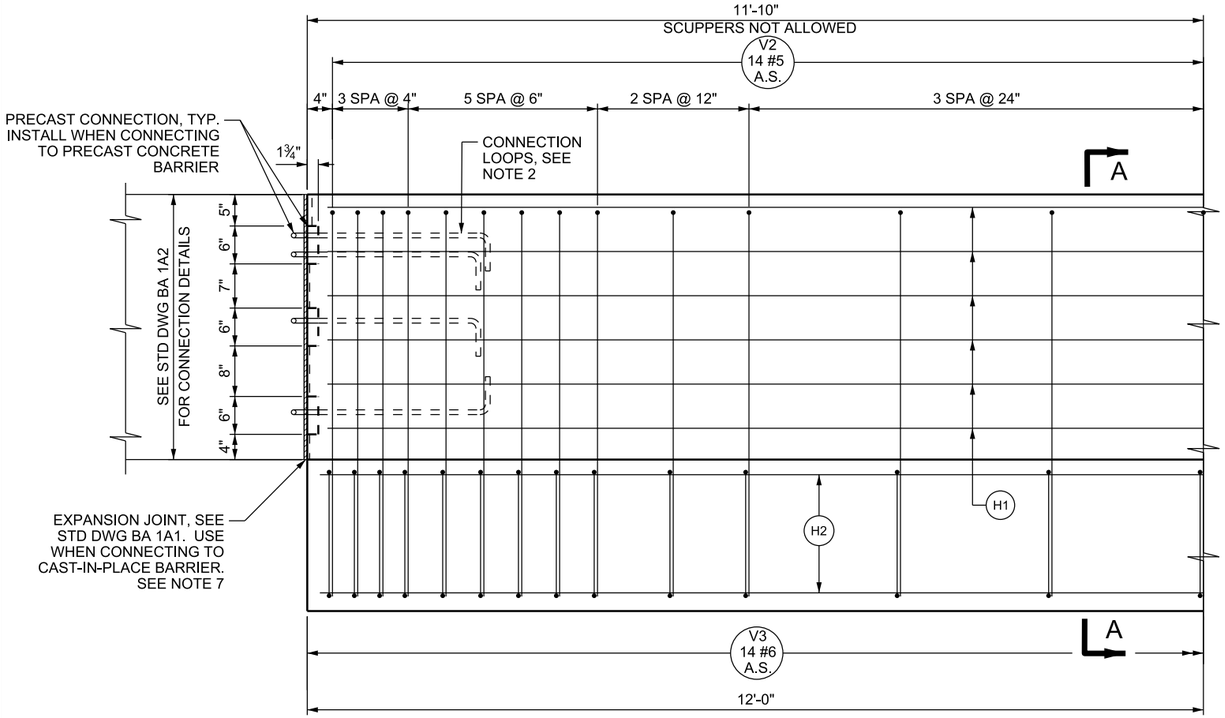

ELEVATION

BARRIER ON HMA SHOWN
SEE BA 3E1 FOR BARRIER ON PCCP

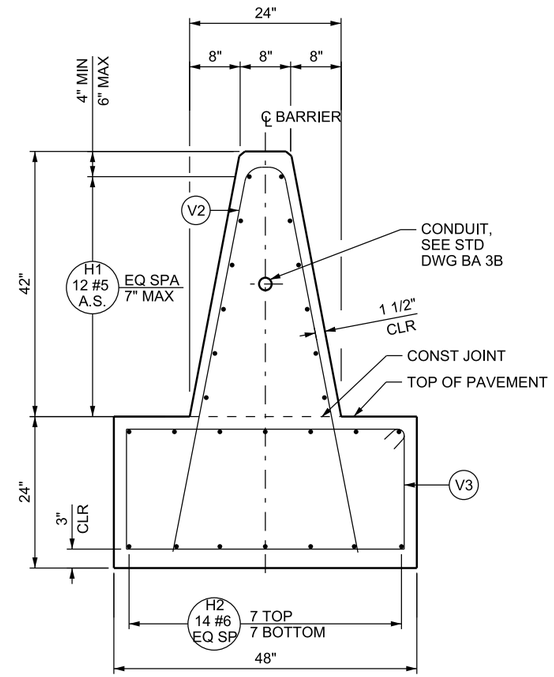

SECTION A-A

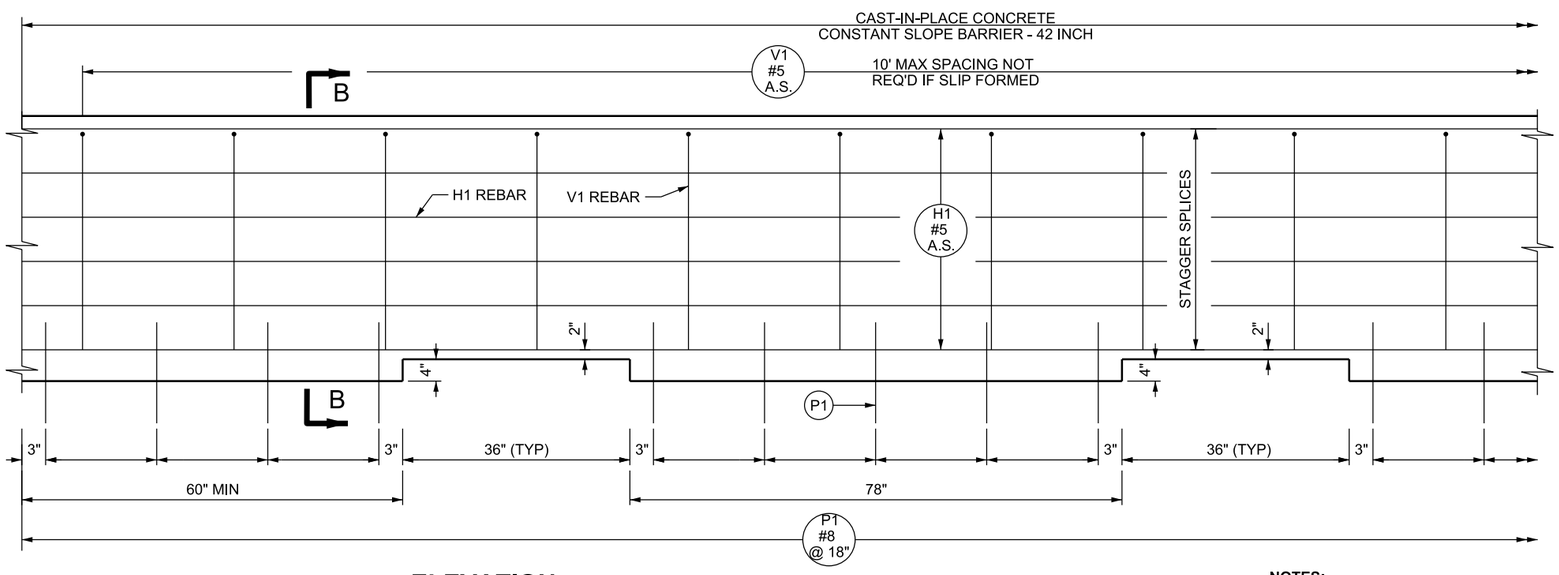

ELEVATION

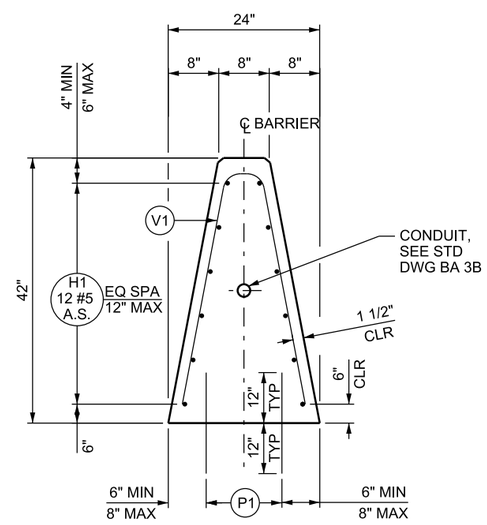

SECTION B-B

DESIGN-ONLY NOTES:

A. SEE STD DWG BA 1B THROUGH BA 1D FOR TYPICAL LAYOUT REQUIREMENTS.

B. INDICATE ON PLAN SET WHEN BARRIER SECTIONS WITH SCUPPERS ARE REQUIRED.

NOTES:

1. SEE "BARRIER CONNECTION DETAILS" ON STD DWG BA 1A2 FOR CONNECTION LOOP DETAILS.
2. DRILL AND EPOXY BOND P1 BARS OR HAND POSITION WHILE CONCRETE IS IN A WORKABLE FORM WHEN USING PCCP PAVEMENT.
3. THE ENGINEER APPROVES CONTRACTOR DEVISED METHOD OF POSITIONING THE LONGITUDINAL REINFORCING STEEL ±1/2 INCH AS DIMENSIONED.
4. SEE STD DWG BA 3E2 FOR REINFORCING SCHEDULE AND NOTES.
5. PROVIDE SCUPPERS AS SHOWN.
6. DO NOT USE BARRIER SEAL WHEN SCUPPERS ARE PRESENT ON BARRIER.
7. SEE STD DWG BA 3A2 FOR APPROACH AND TRAILING END TREATMENTS. NO EXPANSION JOINT REQUIRED.
8. SEE STD DWG BA 1A1 FOR GENERAL NOTES.

REVISIONS

NO.	DATE	APPR.	REMARKS

UTAH DEPARTMENT OF TRANSPORTATION
STANDARD DRAWINGS FOR ROAD AND BRIDGE CONSTRUCTION
SALT LAKE CITY, UTAH

RECOMMENDED FOR APPROVAL — JAN.01.2017 DATE
CHAIRMAN STANDARDS COMMITTEE APPROVED — JAN.01.2017 DATE
DEPUTY DIRECTOR

STANDARD DRAWING TITLE
CAST-IN-PLACE CONCRETE CONSTANT SLOPE BARRIER WITH SCUPPERS - 42 INCH, TL-5

STD. DWG. NO.
BA 3E3

DGN File: L:\Standard_Drawings\Imperial\2017 Approved\1-All Drawings\BA03E3.dgn
28-NOV-2016

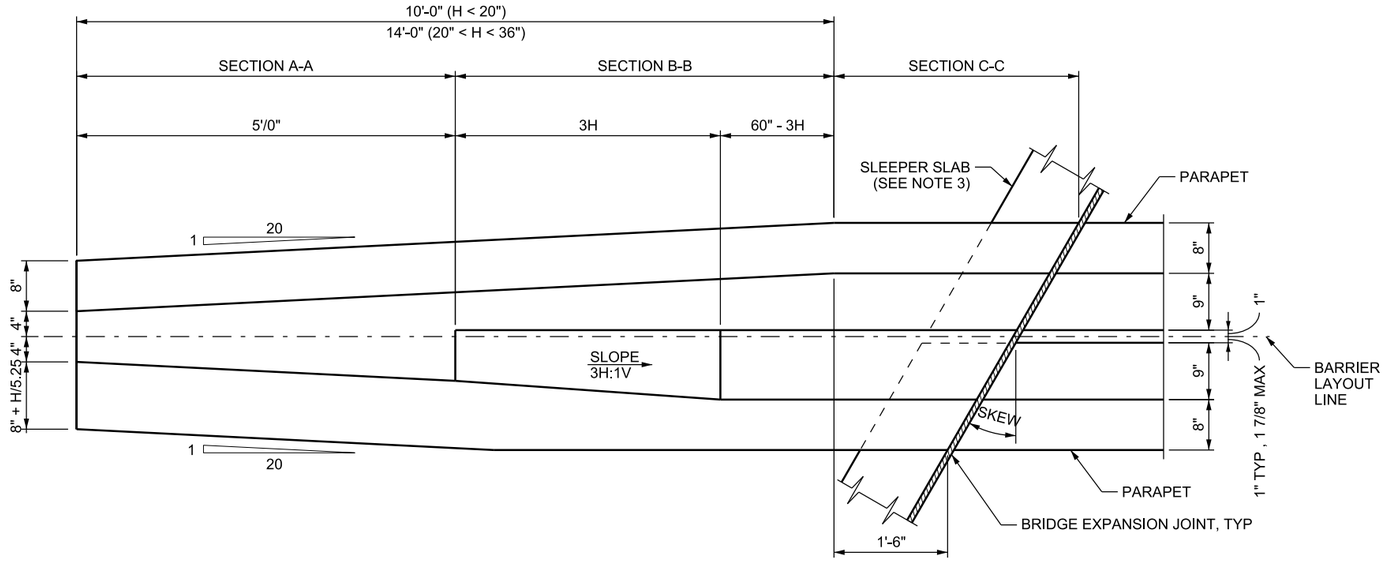

PLAN - SKEW < 30°

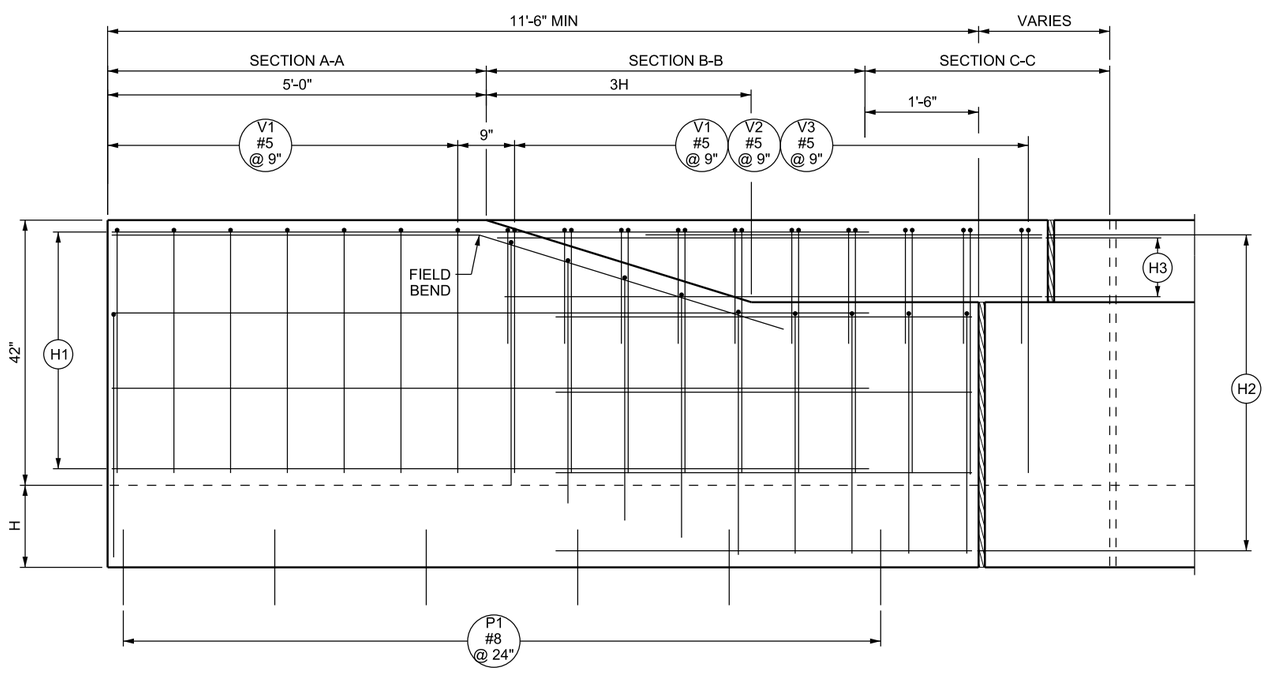

ELEVATION - SKEW < 30°

DESIGN-ONLY NOTES

A. SEE STD DWG BA 1B THROUGH BA 1D FOR TYPICAL LAYOUT REQUIREMENTS.

NOTES

1. SEE STD DWG BA 1A1 FOR GENERAL NOTES.
2. SEE STD DWG BA 3F3 FOR SECTIONS AND REINFORCING SCHEDULE.
3. SLEEPER SLAB ENDS AT FACE OF PARAPET FOR H GREATER THAN 14 INCHES.

REVISIONS

NO.	DATE	APPR.	REMARKS

UTAH DEPARTMENT OF TRANSPORTATION
STANDARD DRAWINGS FOR ROAD AND BRIDGE CONSTRUCTION
SALT LAKE CITY, UTAH

RECOMMENDED FOR APPROVAL — JAN.01.2017 DATE
CHAIRMAN STANDARDS COMMITTEE APPROVED — JAN.01.2017 DATE
DEPUTY DIRECTOR

CAST-IN-PLACE CONCRETE
CONSTANT SLOPE BARRIER
- 42 INCH, BRIDGE
PARAPET TRANSITION
1 OF 3

STANDARD DRAWING TITLE

STD. DWG. NO.
BA 3F1

28-NOV-2016 DGN File:L:\Standard Drawings\Imperial\2017 Approved\1-All Drawings\BA03F1.dgn

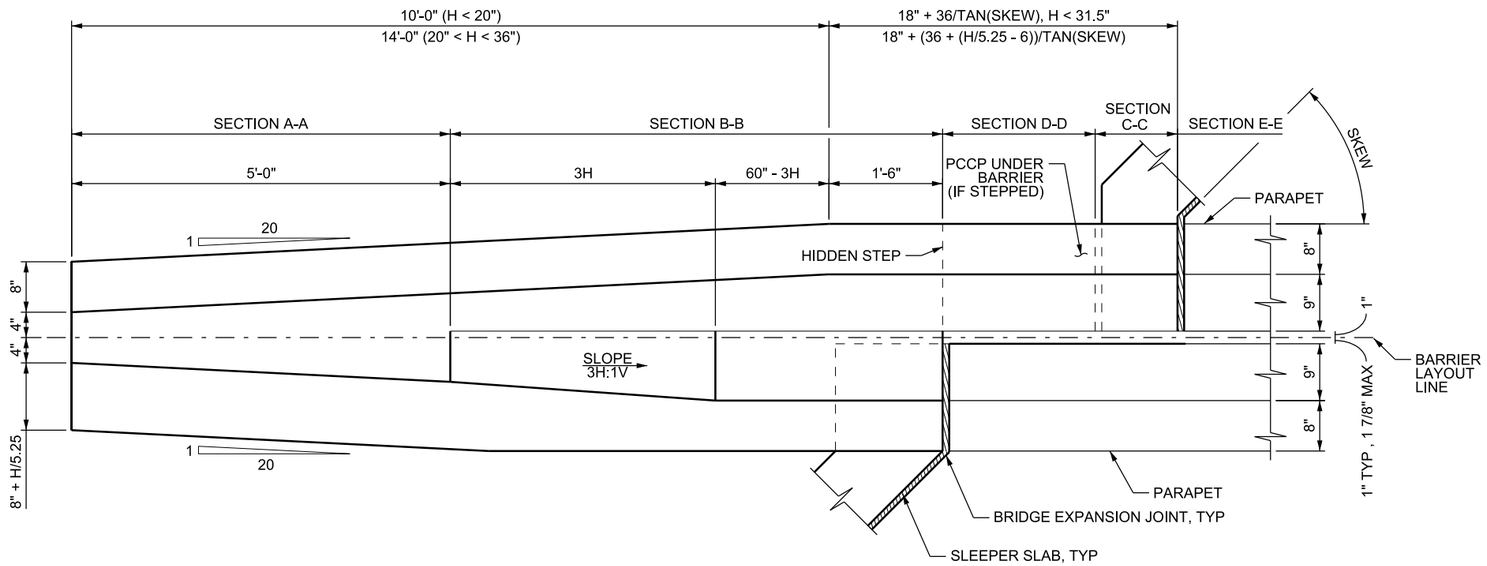

PLAN - H < 36 INCH, 30° < SKEW < 45°

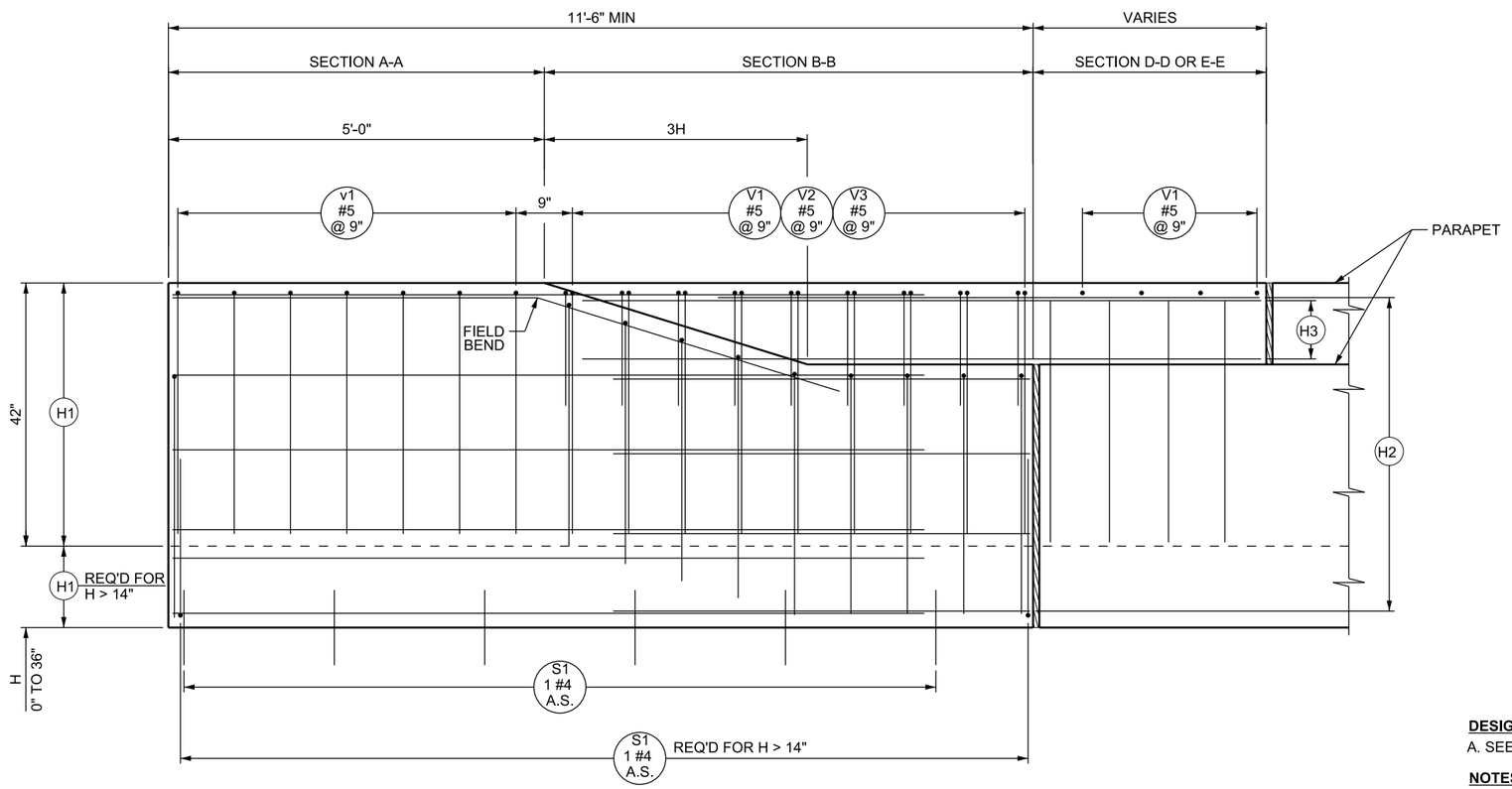

ELEVATION - H < 36 INCH, 30° < SKEW < 45°

DESIGN-ONLY NOTES

A. SEE STD DWG BA 1B THROUGH BA 1D FOR TYPICAL LAYOUT REQUIREMENTS.

NOTES

1. SEE STD DWG BA 1A1 FOR GENERAL NOTES.
2. SEE STD DWG BA 3F3 FOR SECTIONS AND REINFORCING SCHEDULE.

REVISIONS

NO.	DATE	APPR.	REMARKS

UTAH DEPARTMENT OF TRANSPORTATION
STANDARD DRAWINGS FOR ROAD AND BRIDGE CONSTRUCTION
SALT LAKE CITY, UTAH

RECOMMENDED FOR APPROVAL — JAN.01.2017 DATE
CHAIRMAN STANDARDS COMMITTEE APPROVED — JAN.01.2017 DATE
DEPUTY DIRECTOR

CAST-IN-PLACE CONCRETE CONSTANT SLOPE BARRIER - 42 INCH, BRIDGE PARAPET TRANSITION 2 OF 3

STANDARD DRAWING TITLE

STD. DWG. NO.
BA 3F2

28-NOV-2016 DGN File: L:\Standard Drawings\Imperial\2017 Approved\1-All Drawings\BA03F2.dgn

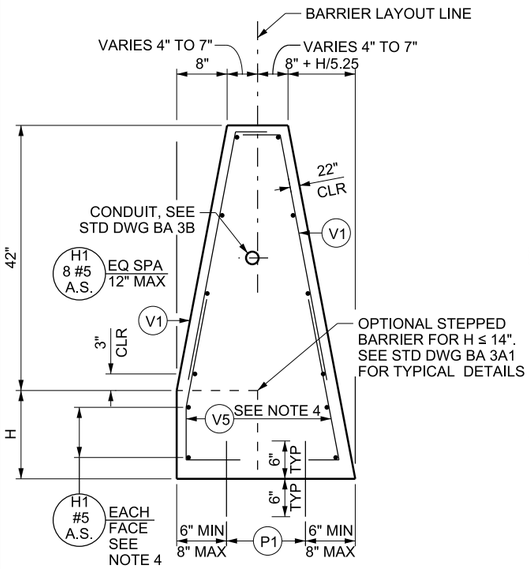

SECTION A-A

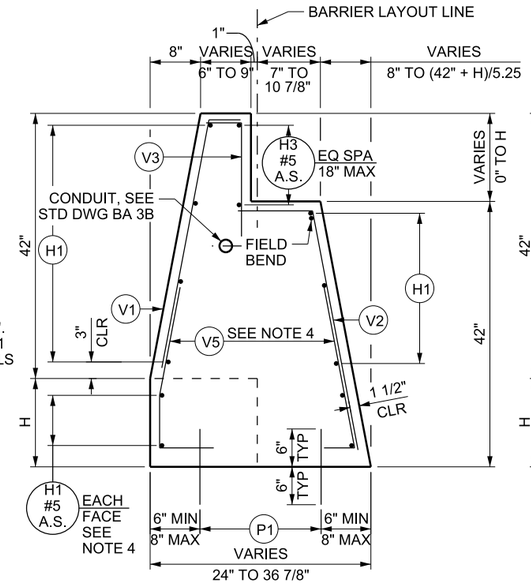

SECTION B-B

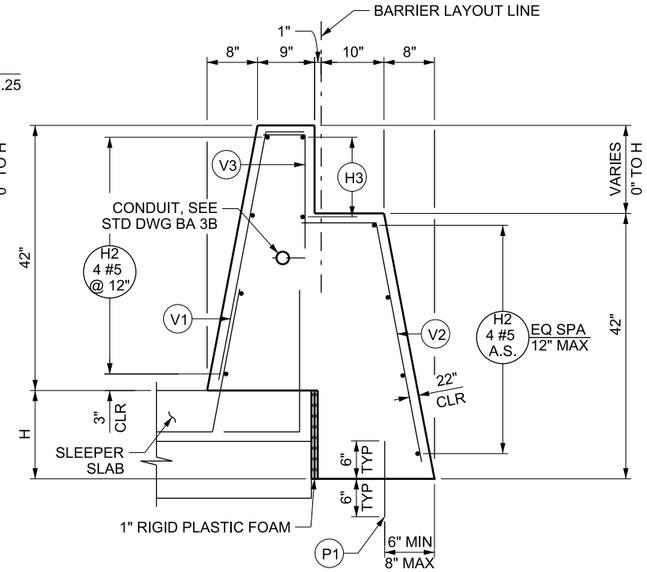

SECTION C-C

(H < 14", SKEW < 30°)

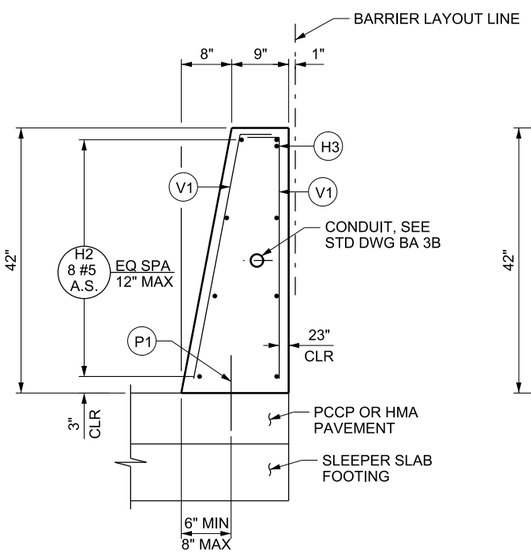

SECTION D-D

(ADJACENT APPROACH SLAB BARRIER NOT SHOWN)

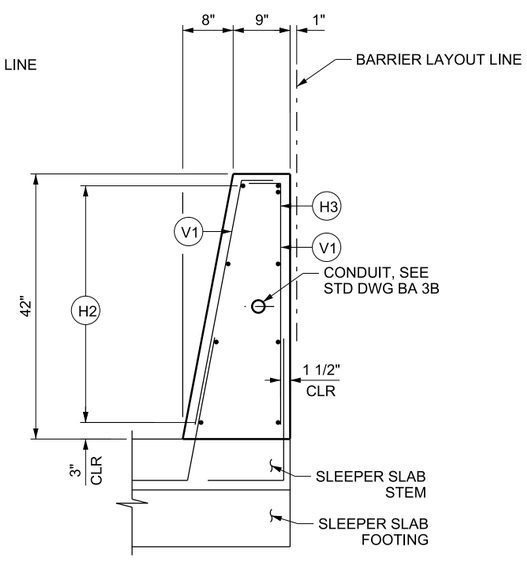

SECTION E-E

(ADJACENT APPROACH SLAB BARRIER NOT SHOWN)

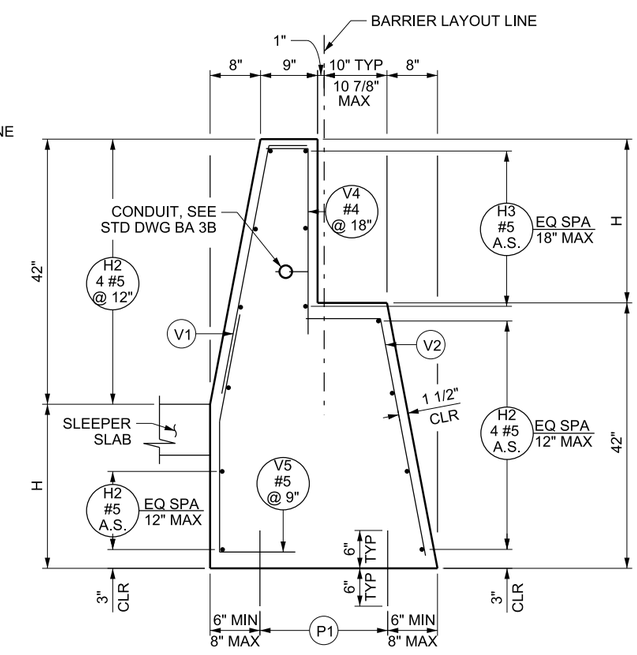

SECTION C-C

(H > 14 INCH, SKEW < 30°)

BAR MARK	BAR SIZE	LOCATION	SKETCH
P1	#8	PAVEMENT TO BARRIER (VERTICAL)	12" / 12" / 3" — OPTION 1 / OPTION 2
H1	#5	HORIZONTAL IN BARRIER	10'-0" FOR H < 20" / 15'-6" FOR H < 36"
H2	#5	HORIZONTAL IN BARRIER	6'-0"
H3	#5	HORIZONTAL IN BARRIER (36" MIN LAP)	VARIES
V1	#5	VERTICAL IN BARRIER	5", 101° OR 90°, 36", ROTATED AS NEEDED TO MAINTAIN CLEAR
V2	#5	VERTICAL IN BARRIER	12", 101°, 36"
V3	#4	VERTICAL IN BARRIER	5", 18", ROTATED AS NEEDED TO MAINTAIN CLEAR
V4	#4	VERTICAL IN BARRIER	5", H, ROTATED AS NEEDED TO MAINTAIN CLEAR
V5	#4	VERTICAL IN BARRIER	18", H - 3", 170° OR 180°, 90° OR 79°, 12"

NOTES

1. SEE STD DWG BA 3F1 AND BA 3F2 FOR LOCATION OF SECTIONS.
2. DRILL AND EPOXY BOND P1 BARS OR HAND POSITION WHILE CONCRETE IS IN A WORKABLE FORM WHEN USING PCCP PAVEMENT.
3. H1 AND H2 BARS CAN BE OPTIMIZED OR COMBINED.
4. ADDITIONAL H1 BARS AND V5 BARS REQUIRED FOR H GREATER THAN 14 INCHES.

REVISIONS

NO.	DATE	APPR.	REMARKS

UTAH DEPARTMENT OF TRANSPORTATION
STANDARD DRAWINGS FOR ROAD AND BRIDGE CONSTRUCTION
SALT LAKE CITY, UTAH

RECOMMENDED FOR APPROVAL — JAN.01.2017 DATE
CHAIRMAN STANDARDS COMMITTEE APPROVED — JAN.01.2017 DATE
DEPUTY DIRECTOR

CAST-IN-PLACE CONCRETE CONSTANT SLOPE BARRIER - 42 INCH, BRIDGE PARAPET TRANSITION 3 OF 3

STANDARD DRAWING TITLE

STD. DWG. NO.
BA 3F3

DGN File:L:\Standard Drawings\Imperial\2017 Approved\1-All Drawings\BA03F3.dgn
28-NOV-2016

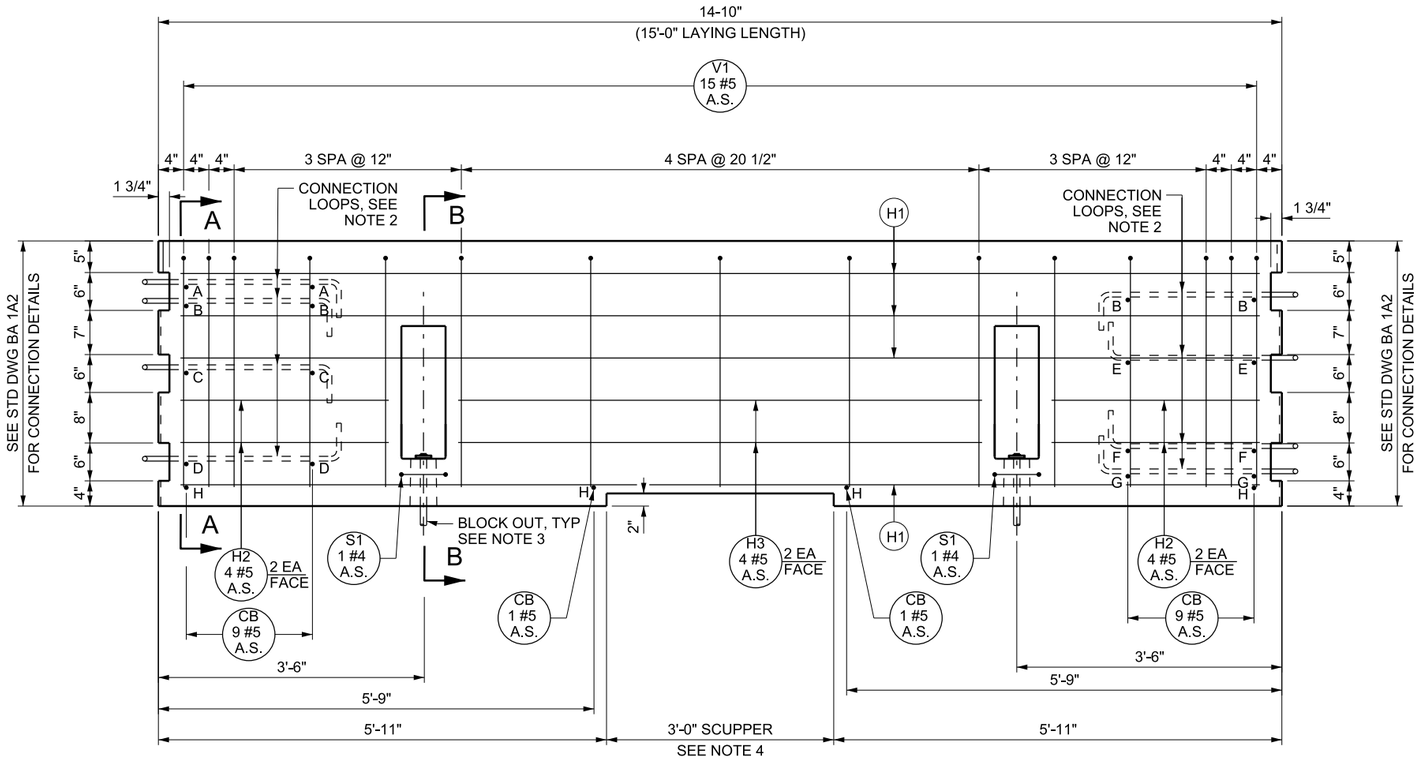

ELEVATION

BAR MARK	BAR SIZE	NO. BARS	LOCATION	SKETCH
H1	#5	9	HORIZONTAL IN BARRIER TIED INSIDE V1 BARS	14'-3"
H2	#5	8	HORIZONTAL IN BARRIER TIED INSIDE V1 BARS	2'-9"
H3	#5	4	HORIZONTAL IN BARRIER TIED INSIDE V1 BARS	7'-0"
S1	#4	2	HORIZONTAL AROUND BARRIER STABILIZATION SLOTS TOTAL LENGTH = 5'-7"	20 1/4"; 7 1/4"; BLOCK OUTS; 1 1/2" R, TYP; 12"
CB	#4	20	CROSS BARS (CB) TIED TO V1 BARS	L * NOT REQUIRED WITH V1 OPTION 2 BARS
V1	#5	15	VERTICAL IN BARRIER TOTAL LENGTH: OPTION 1 = 6'-10 1/2" OPTION 2 = 7'-11"	OPTION 1: 36 1/2"; 2 3/4"; 22°; 34 7/8" TYP; 19 1/2" OPTION 2: 37"; 22°; 37 3/4" TYP; 79°; 79°; 19 1/2"

ID	L	QTY
A	7 1/2"	2
B	8 1/2"	4
C	13"	2
D	18 1/2"	2
E	12"	2
F	17 1/2"	2
G	19"	2
H*	19 1/2"	4

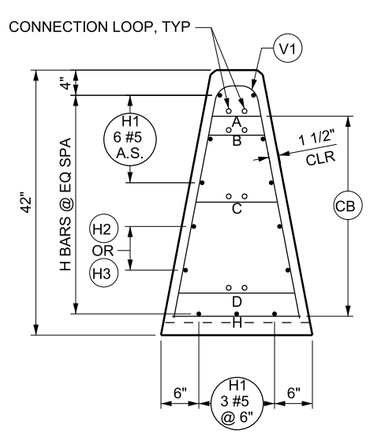

SECTION A-A

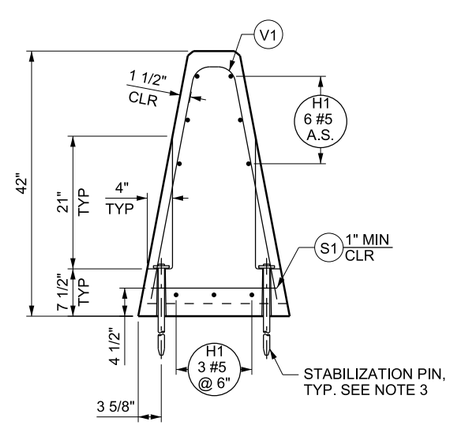

SECTION B-B

DESIGN-ONLY NOTES:

A. SEE STD DWG BA 1B THROUGH BA 1D FOR TYPICAL LAYOUT REQUIREMENTS.
B. INDICATE ON PLAN SET WHEN BARRIER SECTIONS WITH SCUPPERS ARE REQUIRED.

NOTES:

1. SEE STD DWG BA 1A1 AND BA 1A2 FOR GENERAL NOTES.
2. SEE "BARRIER CONNECTION DETAILS" ON STD DWG BA 1A2 FOR CONNECTION LOOP DETAILS.
3. SEE "BARRIER BLOCK OUT AND STABILIZATION PIN" ON STD DWG BA 1A2 FOR DETAILS.
4. DO NOT USE BARRIER SEAL WHEN SCUPPERS ARE PRESENT ON BARRIER.
5. EACH BARRIER UNIT WEIGHS 5.2 TONS.

REVISIONS

NO.	DATE	APPR.	REMARKS

UTAH DEPARTMENT OF TRANSPORTATION
STANDARD DRAWINGS FOR ROAD AND BRIDGE CONSTRUCTION
SALT LAKE CITY, UTAH

RECOMMENDED FOR APPROVAL — JAN.01.2017 DATE
CHAIRMAN STANDARDS COMMITTEE APPROVED — JAN.01.2017 DATE
DEPUTY DIRECTOR

PRECAST CONCRETE CONSTANT SLOPE BARRIER - 42 INCH

STANDARD DRAWING TITLE

STD. DWG. NO.
BA 3G

28-NOV-2016 DGN File:L:\Standard_Drawings\Imperial\2017 Approved\1-All Drawings\BA03G.dgn

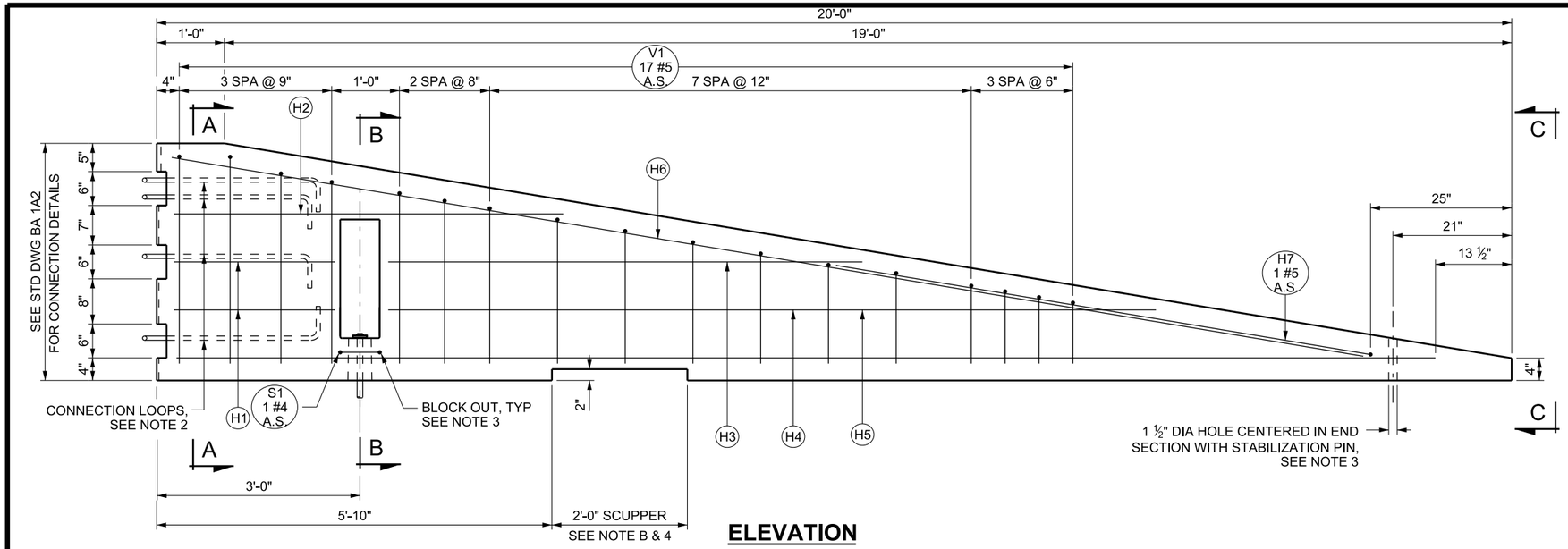

ELEVATION

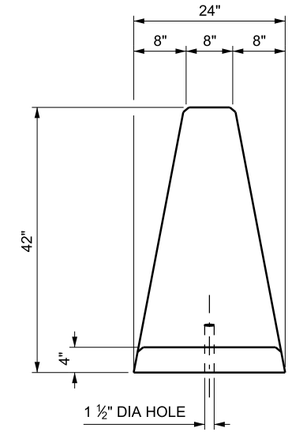

VIEW C-C

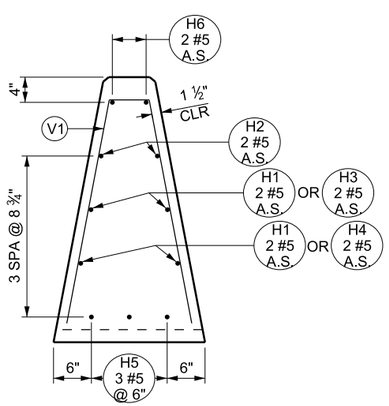

SECTION A-A

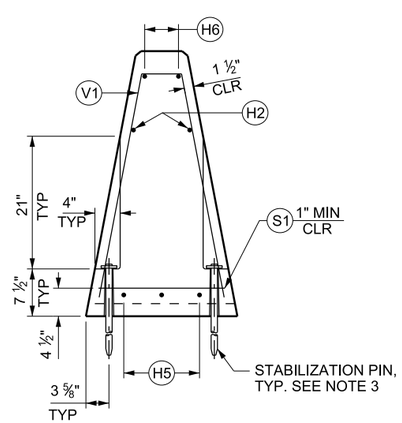

SECTION B-B

BAR MARK	BAR SIZE	NO. BARS	LOCATION	SKETCH
H1	#5	4	HORIZONTAL IN BARRIER TIED INSIDE V1 BARS	2'-4"
H2	#5	2	HORIZONTAL IN BARRIER TIED INSIDE V1 BARS	5'-9"
H3	#5	2	HORIZONTAL IN BARRIER TIED INSIDE V1 BARS	7'-0"
H4	#5	2	HORIZONTAL IN BARRIER TIED INSIDE V1 BARS	11'-4"
H5	#5	3	HORIZONTAL IN BARRIER TIED INSIDE V1 BARS	18'-7"
H6	#5	2	HORIZONTAL IN BARRIER TIED INSIDE V1 BARS	17'-10"
H7	#5	1	HORIZONTAL IN BARRIER ALONG TOP SLOPE TOTAL LENGTH = 17'-7 1/2"	8'-0" TYP 19 ½"
S1	#4	1	HORIZONTAL AROUND BARRIER STABILIZATION SLOTS TOTAL LENGTH = 5'-7"	20 ¼" 7 ¼" BLOCK OUTS 1 ½" R, TYP 12"
V1	#5	17	VERTICAL IN BARRIER	

H	W1	W2	QTY
37"	7"	5 ½"	2
35 ½"	6 ½"	6 ½"	1
34"	6 ½"	6 ½"	1
32 ½"	6"	7 ½"	1
30 ½"	5 ½"	8 ½"	1
29"	5 ½"	8 ½"	1
27"	5"	9 ½"	1
25"	4 ½"	10 ½"	1
23"	4"	11 ½"	1
21"	4"	11 ½"	1
19"	3 ½"	12 ½"	1
17"	3"	13 ½"	1
15"	2 ½"	14 ½"	1
14"	2 ½"	14 ½"	1
13"	2"	15 ½"	1
12"	2"	15 ½"	1

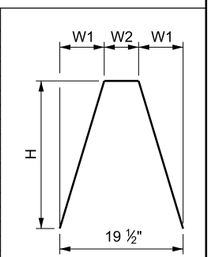

DESIGN-ONLY NOTES:

A. SEE STD DWG BA 1B THROUGH BA 1D FOR TYPICAL LAYOUT REQUIREMENTS.
B. INDICATE ON PLAN SET WHEN BARRIER SECTIONS WITH SCUPPERS ARE REQUIRED.

NOTES:

1. SEE STD DWG BA 1A1 AND BA 1A2 FOR GENERAL NOTES.
2. SEE "BARRIER CONNECTION DETAILS" ON STD DWG BA 1A2 FOR CONNECTION LOOP DETAILS.
3. SEE "BARRIER BLOCK OUT AND STABILIZATION PIN" ON STD DWG BA 1A2 FOR DETAILS.
4. PROVIDE SCUPPERS AS SHOWN. DO NOT USE BARRIER SEAL WHEN SCUPPERS ARE PRESENT ON BARRIER.
5. INSTALL STABILIZATION PINS IN ALL APPLICATIONS.
6. EACH BARRIER UNIT WEIGHS 4.0 TONS.

REVISIONS

NO.	DATE	APPR.	REMARKS

UTAH DEPARTMENT OF TRANSPORTATION
STANDARD DRAWINGS FOR ROAD AND BRIDGE CONSTRUCTION
SALT LAKE CITY, UTAH

RECOMMENDED FOR APPROVAL — JAN.01.2017 DATE
CHAIRMAN STANDARDS COMMITTEE APPROVED — JAN.01.2017 DATE
DEPUTY DIRECTOR

PRECAST CONCRETE CONSTANT SLOPE BARRIER - 42 INCH, SLOPED END SECTION (FOR SPEEDS ≤ 40 MPH)

STANDARD DRAWING TITLE

STD. DWG. NO.
BA 3H

28-NOV-2016 DGN File:L:\Standard Drawings\Imperial\2017 Approved\1-All Drawings\BA03H.dgn

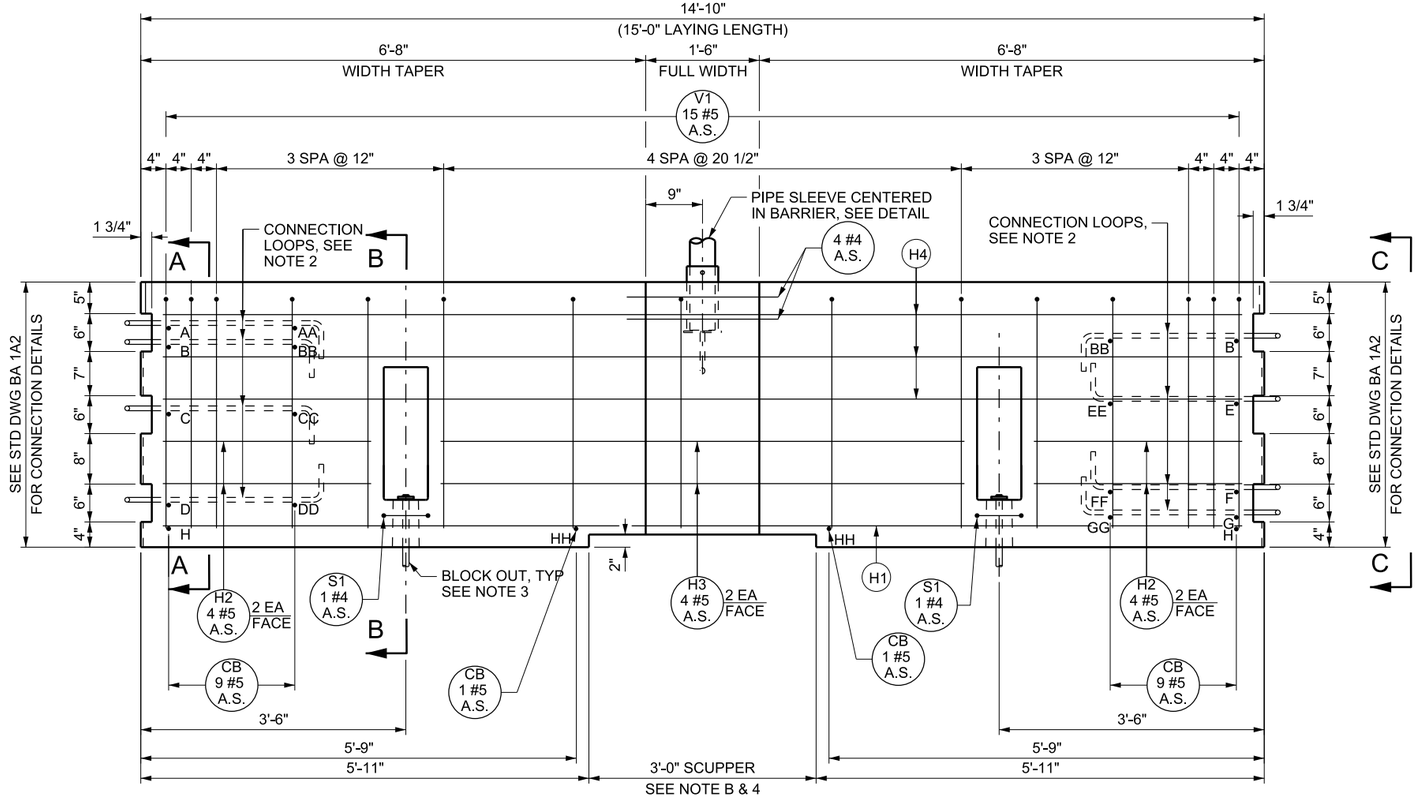

ELEVATION

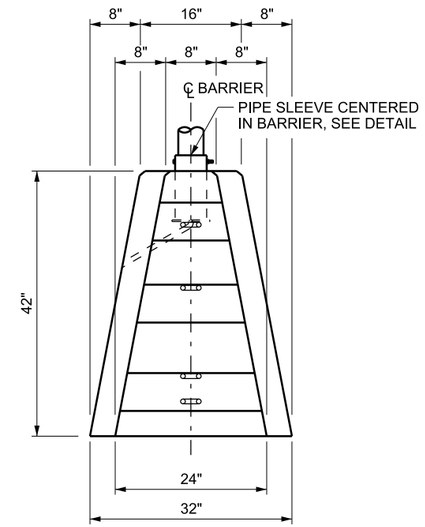

VIEW C-C

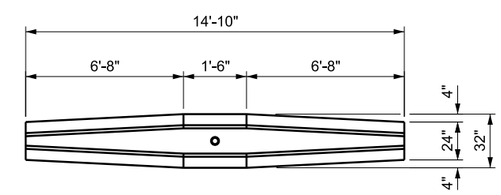

PLAN

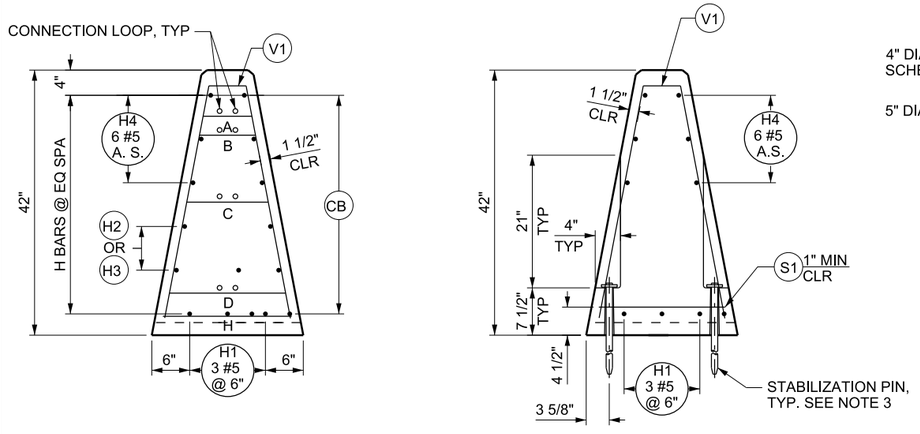

SECTION A-A

SECTION B-B

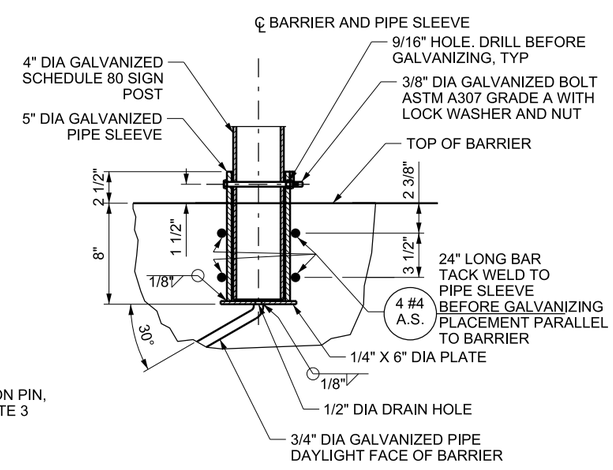

PIPE SLEEVE DETAIL

DESIGN-ONLY NOTES:

A. SEE STD DWG BA 1B THROUGH BA 1D FOR TYPICAL LAYOUT REQUIREMENTS.
B. INDICATE ON PLAN SET WHEN BARRIER SECTIONS WITH SCUPPERS ARE REQUIRED.

NOTES:

1. SEE STD DWG BA 1A1 AND BA 1A2 FOR GENERAL NOTES.
2. SEE "BARRIER CONNECTION DETAILS" ON STD DWG BA 1A2 FOR CONNECTION LOOP DETAILS.
3. SEE "BARRIER BLOCK OUT AND STABILIZATION PIN" ON STD DWG BA 1A2 FOR DETAILS.
4. PROVIDE SCUPPERS AS SHOWN. DO NOT USE BARRIER SEAL WHEN SCUPPERS ARE PRESENT ON BARRIER.
5. SEE SN SERIES STD DWG FOR SIGN MOUNTING, HARDWARE, AND PLACEMENT REQUIREMENTS. MAXIMUM SIGN PANEL AREA IS 36 SQ FT.
6. USE PIPES CONFORMING TO ASTM A 53 GRADE B, ASTM A 500 GRADE B, OR ASTM API 5L GRADE B/X42. GALVANIZE IN ACCORDANCE WITH ASTM A 123 AFTER FABRICATION IS COMPLETED.
7. SEE STD DWG BA 3I2 FOR REINFORCING SCHEDULE.
8. EACH BARRIER UNIT WEIGHS 6.6 TONS.

NO.	DATE	APPR.	REMARKS

REVISIONS

UTAH DEPARTMENT OF TRANSPORTATION
STANDARD DRAWINGS FOR ROAD AND BRIDGE CONSTRUCTION
SALT LAKE CITY, UTAH

RECOMMENDED FOR APPROVAL — JAN.01.2017 DATE
CHAIRMAN STANDARDS COMMITTEE APPROVED — JAN.01.2017 DATE
DEPUTY DIRECTOR

PRECAST
CONCRETE CONSTANT
SLOPE BARRIER - 42 INCH,
MEDIAN SMALL SIGN
SECTION
1 OF 2
STANDARD DRAWING TITLE

STD. DWG. NO.
BA 3I1

DGN File: L:\Standard Drawings\Imperial\2017 Approved\1-All Drawings\BA03I1.dgn
28-NOV-2016

BAR MARK	BAR SIZE	NO. BARS	LOCATION	SKETCH
H1	#5	3	HORIZONTAL IN BARRIER	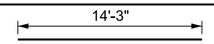
H2	#5	8	HORIZONTAL IN BARRIER TIED INSIDE V1 BARS	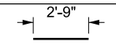
H3	#5	4	HORIZONTAL IN BARRIER TIED INSIDE V1 BARS	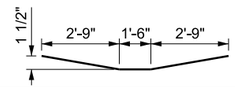
H4	#5	6	HORIZONTAL IN BARRIER TIED INSIDE V1 BARS	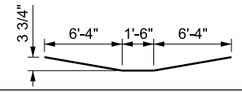
S1	#4	2	HORIZONTAL AROUND BARRIER STABILIZATION SLOTS TOTAL LENGTH = 6'-3 1/2"	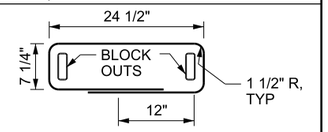
CB	#4	20	CROSS BARS (CB) TIED TO V1 BARS	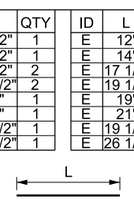

ID	L	QTY
A	7 1/2"	1
AA	9 1/2"	1
B	8 1/2"	2
BB	10 1/2"	2
C	13"	1
CC	15"	1
D	18 1/2"	1
DD	20 1/2"	1

ID	L	QTY
E	12"	1
E	14"	1
E	17 1/2"	1
E	19 1/2"	1
E	19"	1
E	21"	1
E	19 1/2"	2
E	26 1/2"	2

* NOT REQUIRED WITH V1 OPTION 2 BARS

W	QTY
6"	2
6 1/2"	4
8"	2
9"	2
10 1/2"	2
12 1/2"	2
13 1/2"	1

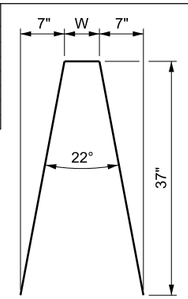

OPTION 1

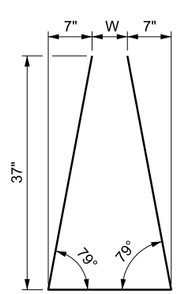

OPTION 2

NOTE

1. SEE STD DWG BA 3I1 FOR LOCATION OF REINFORCEMENT.

REVISIONS

NO.	DATE	APPR.	REMARKS

UTAH DEPARTMENT OF TRANSPORTATION
STANDARD DRAWINGS FOR ROAD AND BRIDGE CONSTRUCTION
SALT LAKE CITY, UTAH

RECOMMENDED FOR APPROVAL — JAN.01, 2017 DATE
CHAIRMAN STANDARDS COMMITTEE APPROVED — JAN.01, 2017 DATE
DEPUTY DIRECTOR

PRECAST
CONCRETE CONSTANT
SLOPE BARRIER - 42 INCH,
MEDIAN SMALL SIGN
SECTION
2 OF 2

STANDARD DRAWING TITLE

STD. DWG. NO.
BA 3I2

28-NOV-2016 DGN File:L:\Standard Drawings\Imperial\2017 Approved\1-All Drawings\BA0312.dgn

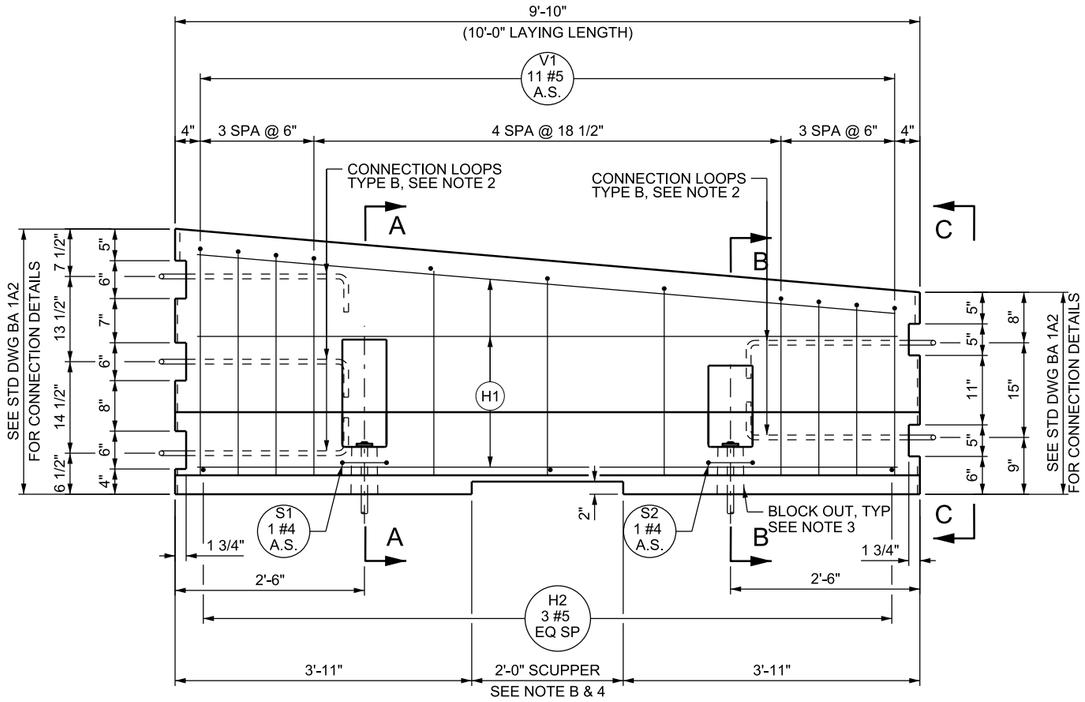

ELEVATION

BAR MARK	BAR SIZE	NO. BARS	SKETCH	LOCATION
H1	#5	7	HORIZONTAL IN BARRIER TIED INSIDE V1 BARS	9'-3"
H2	#5	3	HORIZONTAL IN BARRIER TIED INSIDE V1 BARS	1'-7"
S1	#4	1	HORIZONTAL AROUND BARRIER STABILIZATION SLOTS TOTAL LENGTH = 5'-7"	20 1/4"; 7 1/4"; BLOCK OUTS; 1 1/2" R, TYP; 12"
S2	#4	1	HORIZONTAL AROUND BARRIER STABILIZATION SLOTS TOTAL LENGTH = 5'-3"	18 1/4"; 7 1/4"; BLOCK OUTS; 1 1/2" R, TYP; 12"
V1	#5	11	VERTICAL IN BARRIER	

H	W	QTY
36 1/2"	19"	1
36"	18 1/2"	1
35 1/2"	18"	1
35"	17 1/2"	1
33 1/2"	16"	1
32"	14"	1
30 1/2"	12 1/2"	1
29"	11"	1
28 1/2"	10 1/2"	1
28"	10"	1
27 1/2"	9 1/2"	1

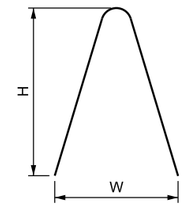

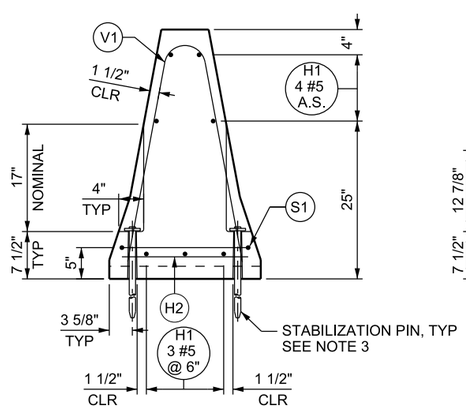

SECTION A-A

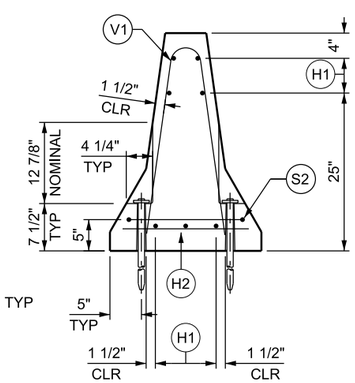

SECTION B-B

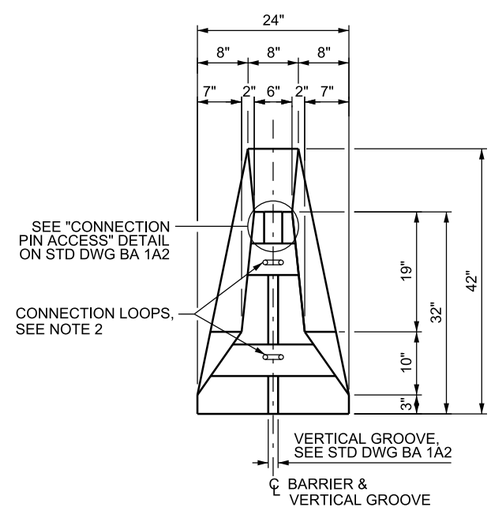

VIEW C-C

DESIGN-ONLY NOTES

A. SEE STD DWG BA 1B THROUGH BA 1D FOR TYPICAL LAYOUT REQUIREMENTS.
B. INDICATE ON PLAN SET WHEN BARRIER SECTIONS WITH SCUPPERS ARE REQUIRED.
C. USE THIS TRANSITION SECTION WHEN A CRASH CUSHION OR W-BEAM GUARDRAIL TRANSITION IS REQUIRED ON A CONSTANT SLOPE BRIDGE PARAPET OR PRECAST CONCRETE CONSTANT SLOPE BARRIER - 42 INCH.

NOTES

1. SEE STD DWG BA 1A1 FOR GENERAL NOTES.
2. SEE "BARRIER CONNECTION DETAILS" ON STD DWG BA 1A2 FOR CONNECTION LOOP DETAILS.
3. SEE "BARRIER BLOCK OUT AND STABILIZATION PIN DETAILS" ON STD DWG BA 1A2 FOR DETAILS.
4. PROVIDE SCUPPERS AS SHOWN. DO NOT USE BARRIER SEAL WHEN SCUPPERS ARE PRESENT ON BARRIER.
5. USE THIS TRANSITION SECTION WHEN A CRASH CUSHION OR W-BEAM GUARDRAIL TRANSITION IS REQUIRED ON A CONSTANT SLOPE BRIDGE PARAPET OR PRECAST CONCRETE CONSTANT SLOPE BARRIER - 42 INCH.
6. BARRIER SHAPE VARIES LINEARLY OVER LENGTH OF BARRIER TRANSITION.
7. EACH BARRIER UNIT WEIGHS 2.7 TONS.

REVISIONS

NO.	DATE	APPR.	REMARKS

UTAH DEPARTMENT OF TRANSPORTATION
STANDARD DRAWINGS FOR ROAD AND BRIDGE CONSTRUCTION
SALT LAKE CITY, UTAH

RECOMMENDED FOR APPROVAL — JAN.01, 2017 DATE
CHAIRMAN STANDARDS COMMITTEE APPROVED — JAN.01, 2017 DATE
DEPUTY DIRECTOR

PRECAST CONCRETE CONSTANT SLOPE BARRIER - 42 INCH, 32 INCH NEW JERSEY SHAPE TRANSITION
STANDARD DRAWING TITLE

STD. DWG. NO.
BA 3J

DGN File: L:\Standard Drawings\Imperial\2017 Approved\1-All Drawings\BA03J.dgn
28-NOV-2016

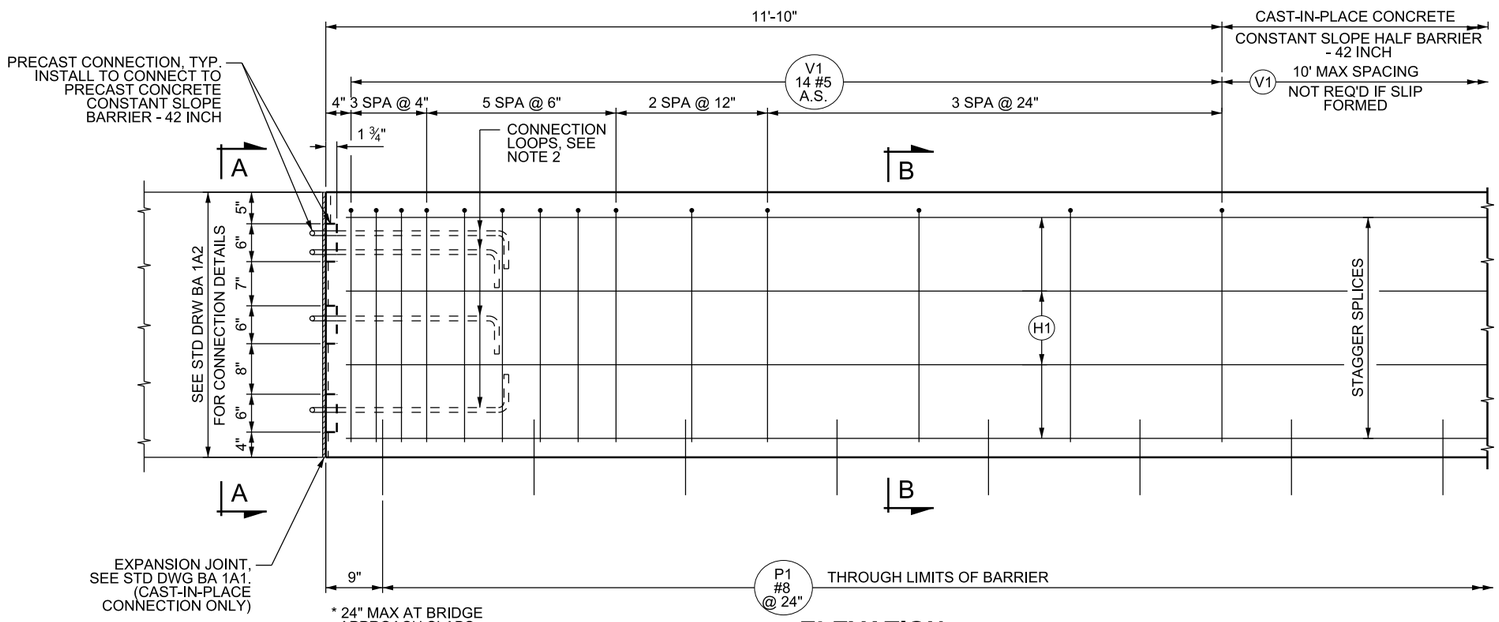

ELEVATION

BAR MARK	BAR SIZE	LOCATION	SKETCH
P1	#8	(BARRIER WITH SCUPPERS) PAVEMENT TO BARRIER THROUGH LIMITS OF BARRIER (VERTICAL)	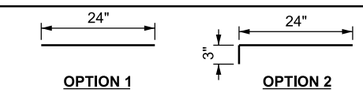
P1	#8	PAVEMENT TO BARRIER THROUGH LIMITS OF BARRIER (VERTICAL)	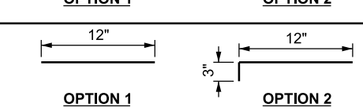
H1	#5	HORIZONTAL IN BARRIER TIED INSIDE V1 BARS CONTINUOUS THROUGH LENGTH OF BARRIER	
V1	#5	VERTICAL IN BARRIER TOTAL LENGTH: OPTION 1 = 6'-4" OPTION 2 = 7'-1 7/8"	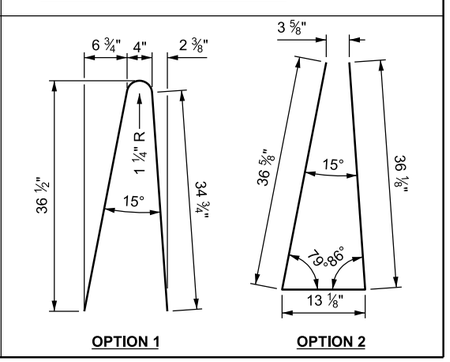

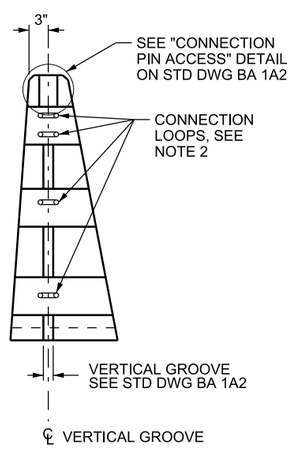

VIEW A-A

PRECAST CONNECTION ONLY

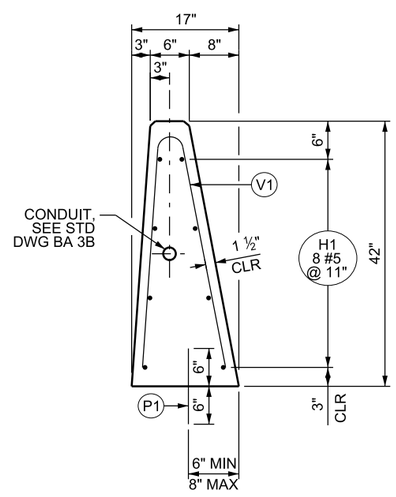

SECTION B-B

DESIGN-ONLY NOTES:

A. SEE STD DWG BA 1B THROUGH BA 1D FOR TYPICAL LAYOUT REQUIREMENTS.

NOTES:

1. SEE STD DWG BA 1A1 FOR GENERAL NOTES.
2. SEE "BARRIER CONNECTION DETAILS" ON STD DWG BA 1A2 FOR CONNECTION LOOP DETAILS.
3. DRILL AND EPOXY BOND P1 BARS OR HAND POSITION WHILE CONCRETE IS IN A WORKABLE FORM WHEN USING PCCP PAVEMENT.
4. THE ENGINEER APPROVES CONTRACTOR DEVISED METHOD OF POSITIONING THE LONGITUDINAL REINFORCING STEEL ±1/2 INCH AS DIMENSIONED.

REVISIONS

NO.	DATE	APPR.	REMARKS

UTAH DEPARTMENT OF TRANSPORTATION
STANDARD DRAWINGS FOR ROAD AND BRIDGE CONSTRUCTION
SALT LAKE CITY, UTAH

RECOMMENDED FOR APPROVAL — JAN. 01, 2017 DATE
CHAIRMAN STANDARDS COMMITTEE — JAN. 01, 2017 DATE
APPROVED — DEPUTY DIRECTOR

CAST-IN-PLACE CONCRETE CONSTANT SLOPE HALF BARRIER - 42 INCH

STANDARD DRAWING TITLE

STD. DWG. NO.
BA 3K1

28-NOV-2016 DGN File:L:\Standard Drawings\Imperial\2017 Approved\1-All Drawings\BA03K1.dgn

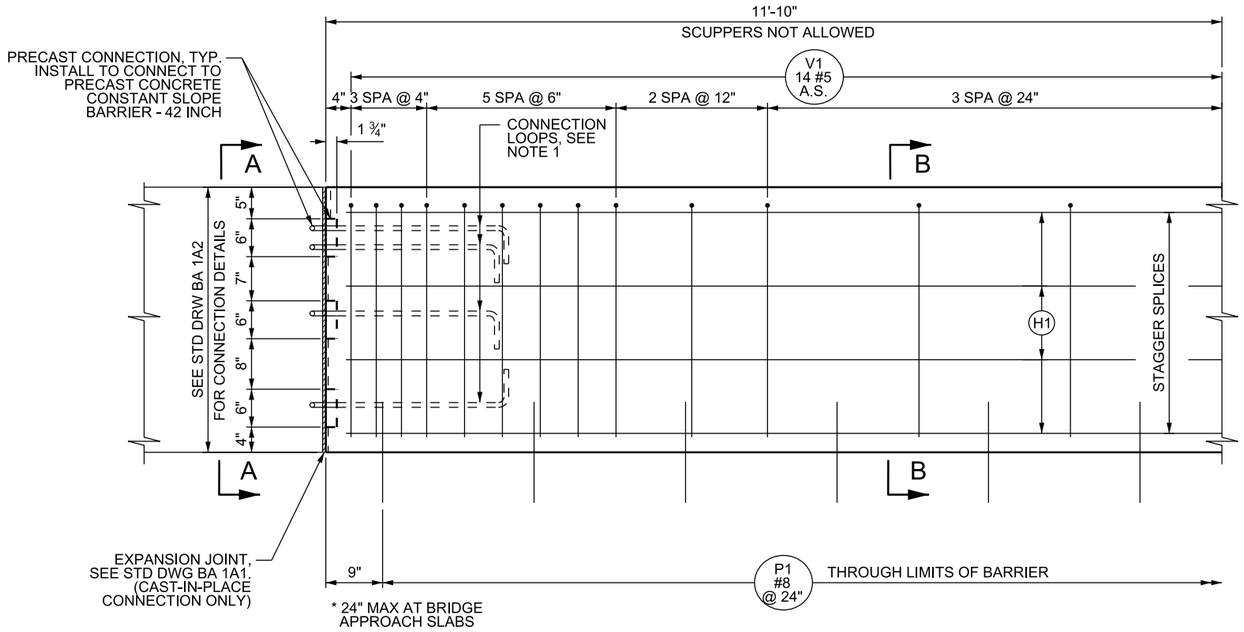

ELEVATION

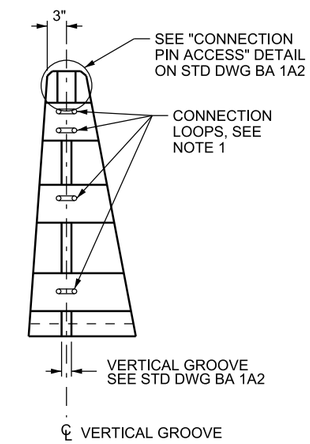

VIEW A-A

PRECAST CONNECTION ONLY

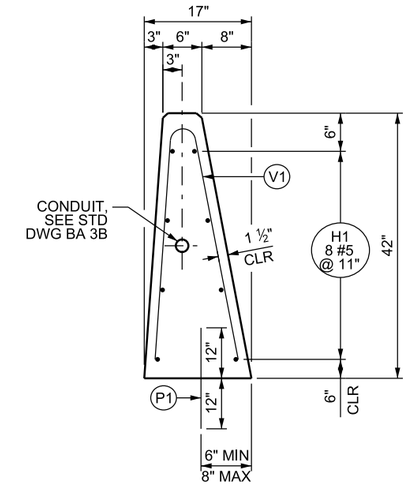

SECTION B-B

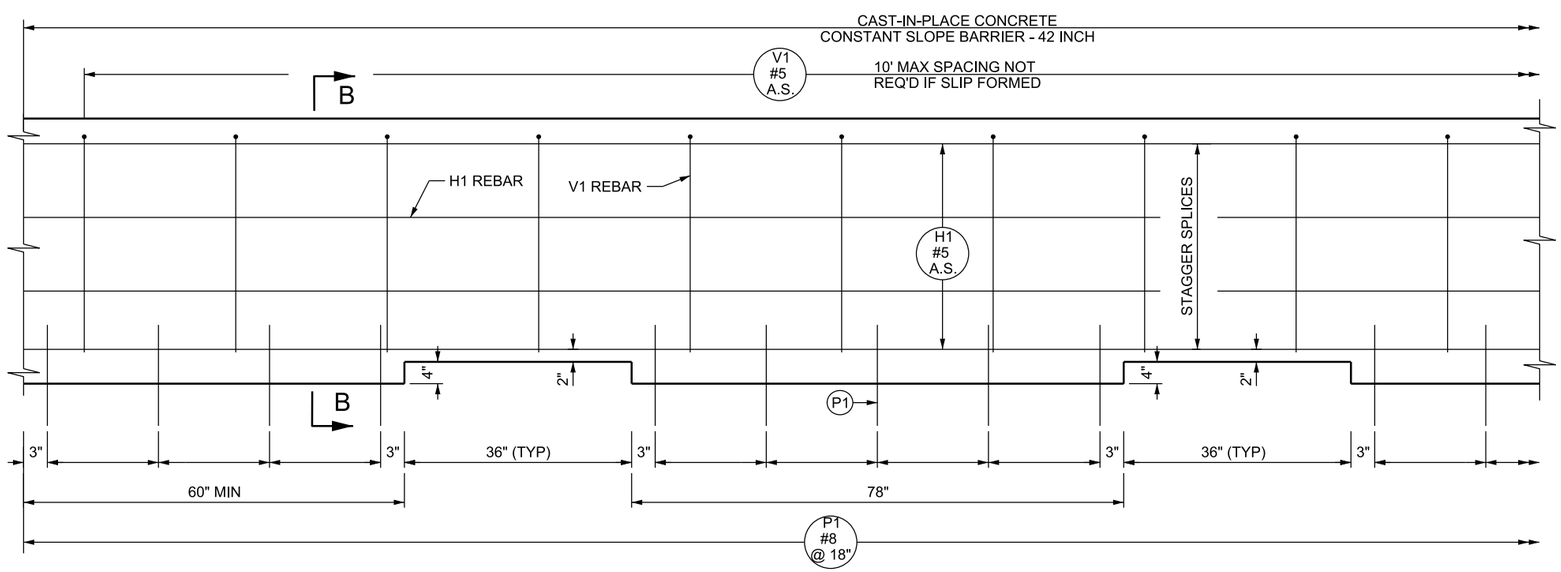

ELEVATION

DESIGN-ONLY NOTES:

A. SEE STD DWG BA 1B THROUGH BA 1D FOR TYPICAL LAYOUT REQUIREMENTS.

B. INDICATE ON PLAN SET WHEN BARRIER SECTIONS WITH SCUPPERS ARE REQUIRED.

NOTES:

1. SEE "BARRIER CONNECTION DETAILS" ON STD DWG BA 1A2 FOR CONNECTION LOOP DETAILS.
2. DRILL AND EPOXY BOND P1 BARS OR HAND POSITION WHILE CONCRETE IS IN A WORKABLE FORM WHEN USING PCCP PAVEMENT.
3. THE ENGINEER APPROVES CONTRACTOR DEVISED METHOD OF POSITIONING THE LONGITUDINAL REINFORCING STEEL ±1/2 INCH AS DIMENSIONED.
4. SEE STD DWG BA 3K1 FOR REINFORCING SCHEDULE AND NOTES.
5. PROVIDE SCUPPERS AS SHOWN.
6. DO NOT USE BARRIER SEAL WHEN SCUPPERS ARE PRESENT ON BARRIER.
7. SEE STD DWG BA 3A2 FOR APPROACH AND TRAILING END TREATMENTS. NO EXPANSION JOINT REQUIRED.
8. SEE STD DWG BA 1A1 FOR GENERAL NOTES.

NO.	DATE	APPR.	REMARKS

REVISIONS

UTAH DEPARTMENT OF TRANSPORTATION
STANDARD DRAWINGS FOR ROAD AND BRIDGE CONSTRUCTION
SALT LAKE CITY, UTAH

RECOMMENDED FOR APPROVAL — JAN. 01, 2017 DATE
CHAIRMAN STANDARDS COMMITTEE APPROVED — JAN. 01, 2017 DATE
DEPUTY DIRECTOR

CAST-IN-PLACE CONCRETE CONSTANT SLOPE HALF BARRIER WITH SCUPPERS - 42 INCH

STANDARD DRAWING TITLE

STD. DWG. NO.
BA 3K2

28-NOV-2016 DGN File: L:\Standard Drawings\Imperial\2017 Approved\1-All Drawings\BA03K2.dgn

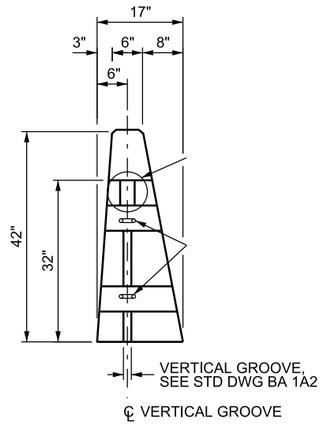

VIEW B-B

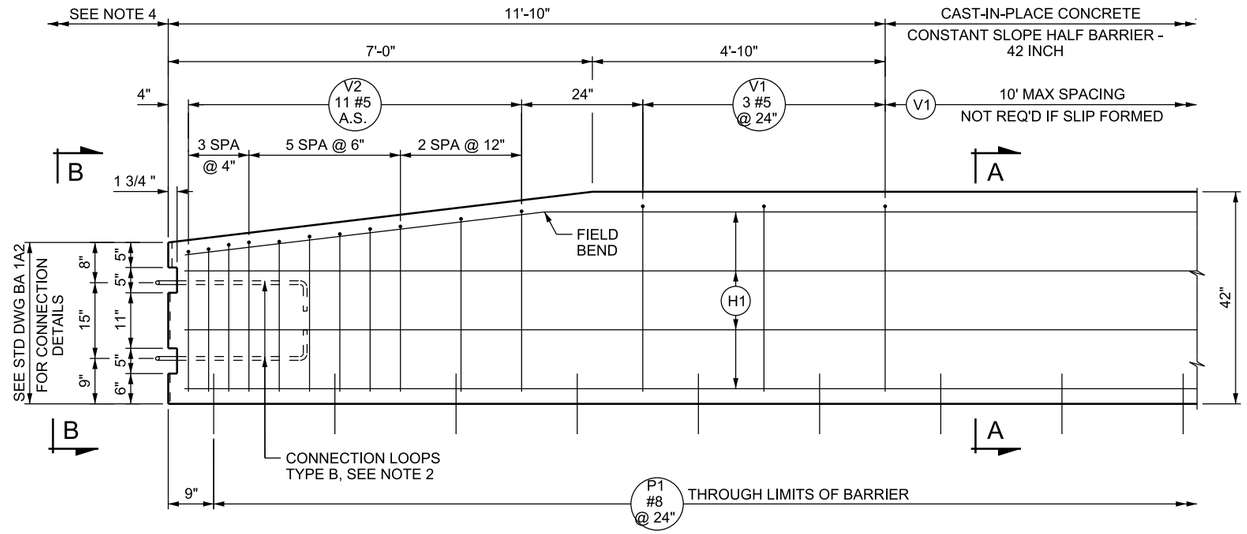

ELEVATION - APPROACH END SECTION

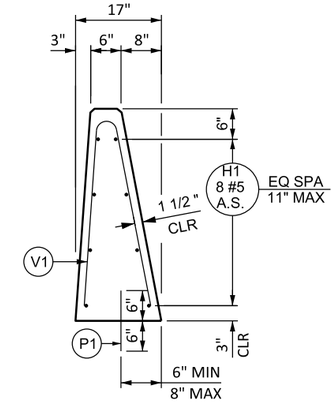

SECTION A - A

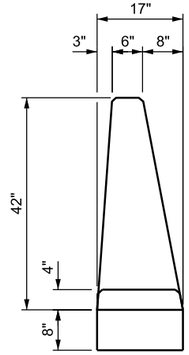

VIEW D-D

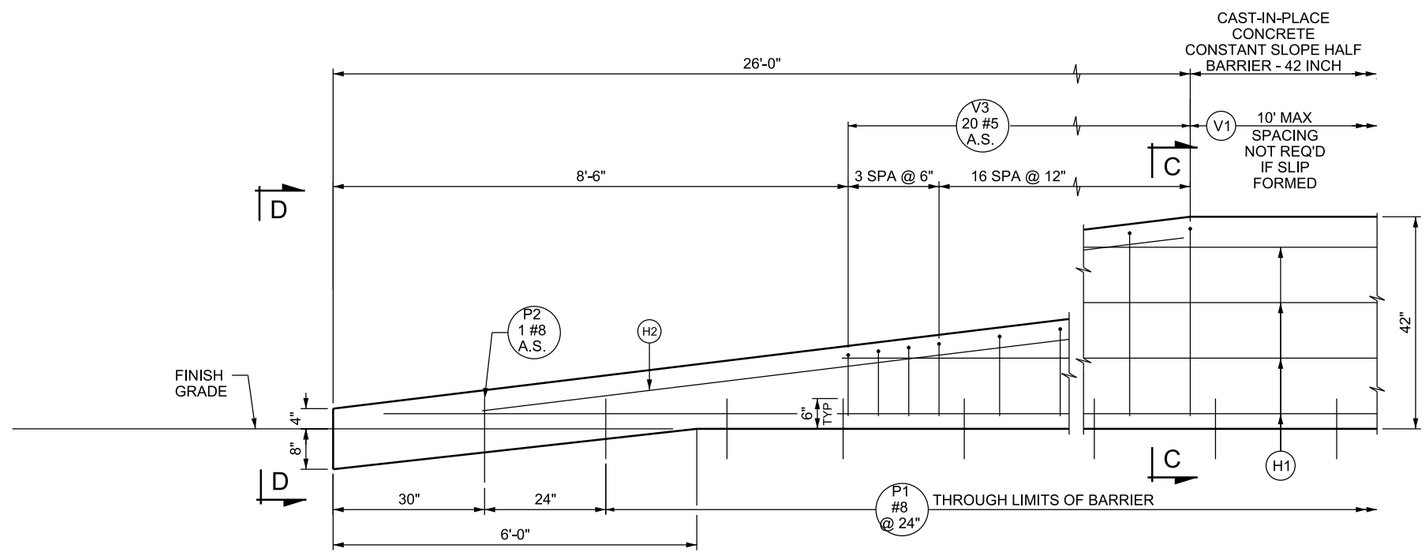

ELEVATION - TRAILING SLOPED END SECTION

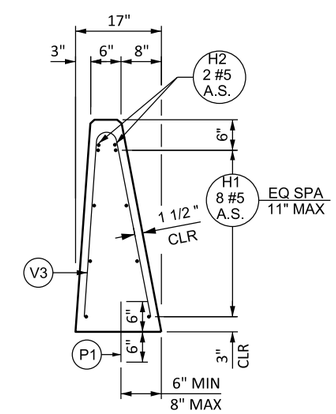

SECTION C - C

DESIGN-ONLY NOTES:

A. SEE STD DWG BA 1B THROUGH BA 1D FOR TYPICAL LAYOUT REQUIREMENTS.
B. USE AN APPROACH END SECTION ON THE APPROACH END OF BARRIER WHEN AN END TREATMENT OR CRASH CUSHION IS REQUIRED.
C. USE A TRAILING SLOPED END SECTION ON THE TRAILING END OF BARRIER WHEN THE END IS OUTSIDE THE MAXIMUM REQUIRED AASHTO CLEAR ZONE OF OPPOSING TRAFFIC. USE IS PERMITTED ON APPROACH END WHEN DESIGN SPEED IS 40 MPH OR LESS.

NOTES

1. SEE STD DWG BA 1A1 FOR GENERAL NOTES.
2. SEE "BARRIER CONNECTION DETAILS" ON STD DWG BA 1A2 FOR CONNECTION LOOP DETAILS.
3. SEE STD DWG BA 3K4 FOR REINFORCING SCHEDULE AND NOTES.

NO.	DATE	APPR.	REMARKS

REVISIONS

UTAH DEPARTMENT OF TRANSPORTATION
STANDARD DRAWINGS FOR ROAD AND BRIDGE CONSTRUCTION
SALT LAKE CITY, UTAH

RECOMMENDED FOR APPROVAL — JAN.01.2017 DATE
CHAIRMAN STANDARDS COMMITTEE APPROVED — JAN.01.2017 DATE
DEPUTY DIRECTOR

CAST-IN-PLACE CONCRETE CONSTANT SLOPE HALF BARRIER - 42 INCH
STANDARD DRAWING TITLE

STD. DWG. NO.
BA 3K3

28-NOV-2016 DGN File:L:\Standard.Drawings\Imperial\2017 Approved\1-All Drawings\BA03K3.dgn

CONSTANT SLOPE BARRIER REINFORCING

BAR MARK	BAR SIZE	LOCATION	SKETCH
P1	#8	PAVEMENT TO BARRIER THROUGH LIMITS OF BARRIER (VERTICAL)	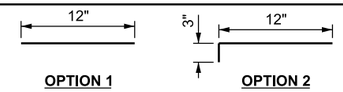
P2	#8	PAVEMENT TO BARRIER AT TRAILING SLOPED END SECTION (VERTICAL)	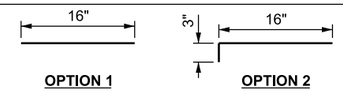
H1	#5	HORIZONTAL IN BARRIER TIED INSIDE V1 BARS CONTINUOUS THROUGH LENGTH OF BARRIER	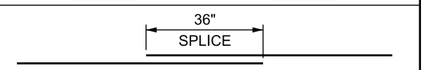
H2	#5	HORIZONTAL IN BARRIER ALONG TOP FACE AT TRAILING SLOPED END SECTION	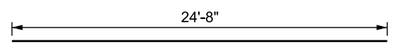
V1	#5	VERTICAL IN BARRIER TOTAL LENGTH: OPTION 1 = 6'-4" OPTION 2 = 7'-1 7/8"	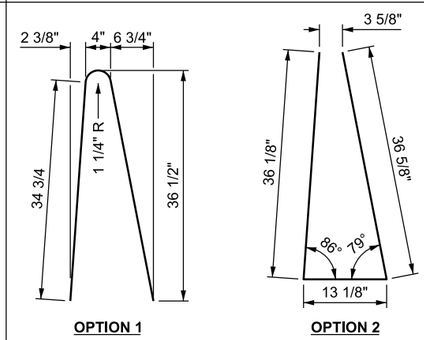
V2	#5	VERTICAL IN APPROACH END SECTION	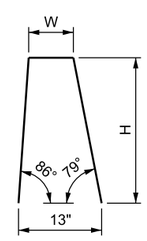

H	W	QTY
35 1/2"	3 1/2"	1
34"	4"	1
32 1/2"	4 1/2"	1
31 1/2"	4 1/2"	1
31"	5"	1
30 1/2"	5"	1
29 1/2"	5"	1
29"	5 1/2"	1
28 1/2"	5 1/2"	1
28"	5 1/2"	1
27 1/2"	5 1/2"	1

V3	#5	VERTICAL IN TRAILING SLOPED END SECTION	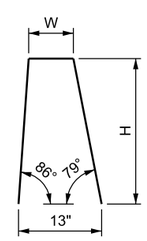

H	W	QTY
37"	3 1/2"	1
35 1/2"	3 1/2"	1
34"	4"	1
32 1/2"	4 1/2"	1
31"	5"	1
29 1/2"	5"	1
28"	5 1/2"	1
27"	6"	1
25 1/2"	6 1/2"	1
24"	6 1/2"	1
22 1/2"	7"	1
21"	7 1/2"	1
19 1/2"	8"	1
18"	8 1/2"	1
16 1/2"	8 1/2"	1
15"	9"	1
13 1/2"	9 1/2"	1
13"	9 1/2"	1
12"	10"	1
11 1/2"	10"	1

NOTES

1. DRILL AND EPOXY BOND P1 BARS OR HAND POSITION WHILE CONCRETE IS IN A WORKABLE FORM WHEN USING PCCP PAVEMENT,
2. THE ENGINEER APPROVES CONTRACTOR DEVISED METHOD OF POSITIONING THE LONGITUDINAL REINFORCING STEEL ±1/2 INCH AS DIMENSIONED.
3. SEE STD DWG BA 3K3 FOR REINFORCING STEEL LOCATION.

REVISIONS

NO.	DATE	APPR.	REMARKS

UTAH DEPARTMENT OF TRANSPORTATION
STANDARD DRAWINGS FOR ROAD AND BRIDGE CONSTRUCTION
SALT LAKE CITY, UTAH

RECOMMENDED FOR APPROVAL — JAN. 01, 2017 DATE
CHAIRMAN STANDARDS COMMITTEE
APPROVED — JAN. 01, 2017 DATE
DEPUTY DIRECTOR

CAST-IN-PLACE CONCRETE CONSTANT SLOPE HALF BARRIER - 42 INCH

STANDARD DRAWING TITLE

STD. DWG. NO.
BA 3K4

DGN File:L:\Standard Drawings\Imperial\2017 Approved\1-All Drawings\BA03K4.dgn
28-NOV-2016

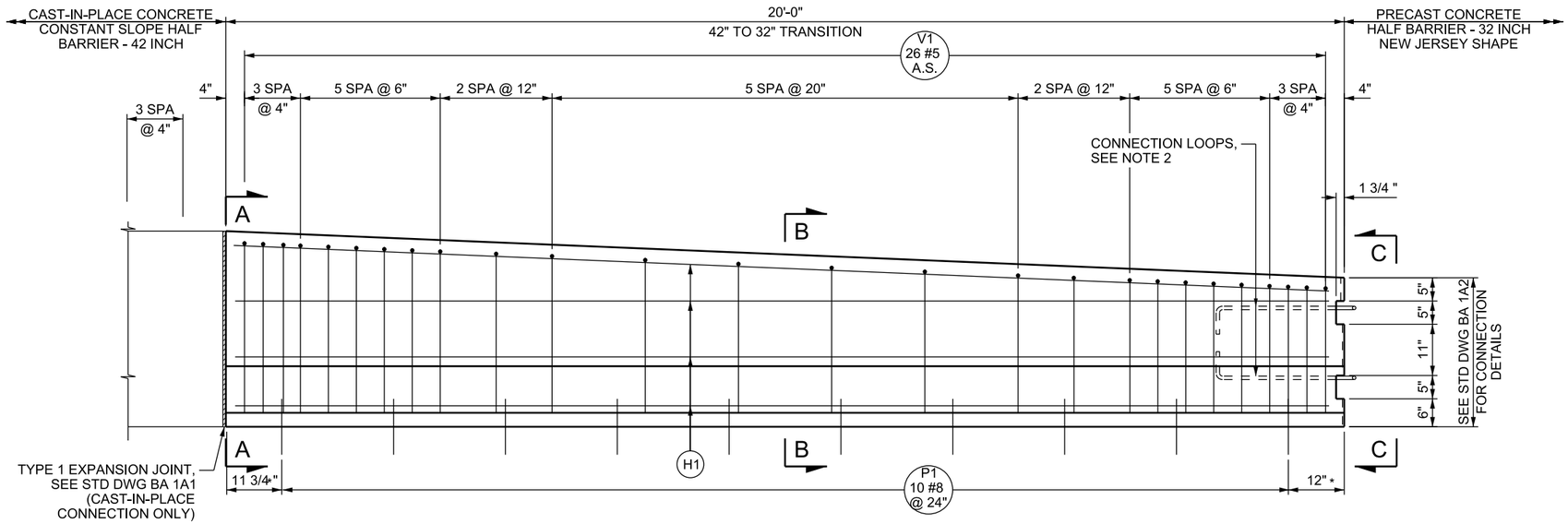

ELEVATION

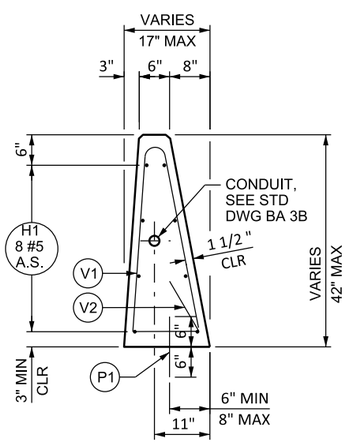

SECTION A-A

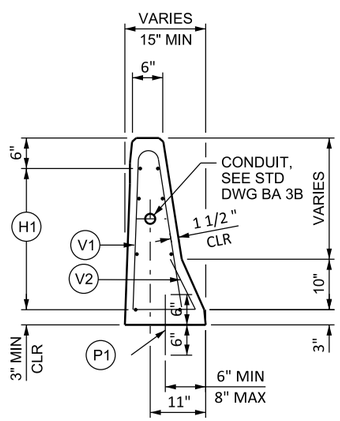

SECTION B-B

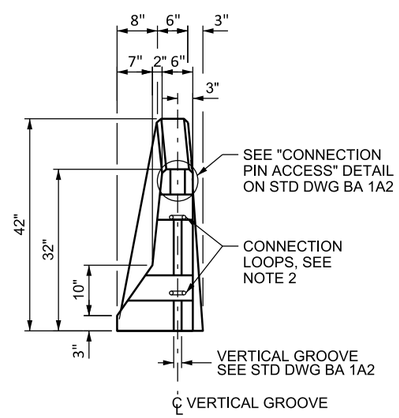

VIEW C-C

BAR MARK	BAR SIZE	NO. BARS	LOCATION	SKETCH
P1	#8	10	PAVEMENT TO BARRIER THROUGH LIMITS OF BARRIER (VERTICAL)	12" OPTION 1; 3" 12" OPTION 2
H1	#5	8	HORIZONTAL IN BARRIER TIED INSIDE V1 BARS CONTINUOUS THROUGH LENGTH OF BARRIER	36" SPLICE
V1	#5	26	VERTICAL IN BARRIER	
V2	#5	18	VERTICAL IN BARRIER TIE TO V1 BARS TOTAL LENGTH = 2'-1"	55° 12" 13"

H	W	QTY
36 1/2"	13"	1
36 1/2"	13"	1
36 1/2"	12 1/2"	1
36"	12 1/2"	1
36"	12 1/2"	1
35 1/2"	12"	1
35 1/2"	12"	1
35"	12"	1
35"	11 1/2"	1
34 1/2"	11 1/2"	1
34"	11"	1
33"	10 1/2"	1
32"	9 1/2"	1
31 1/2"	9"	1
30 1/2"	8 1/2"	1
29 1/2"	8"	1
29"	8"	1
29"	7 1/2"	1
28 1/2"	7"	1
28"	7"	1
28"	7"	1
28"	6 1/2"	1
27 1/2"	6 1/2"	1
27 1/2"	6 1/2"	1
27"	6"	1
27"	6"	1

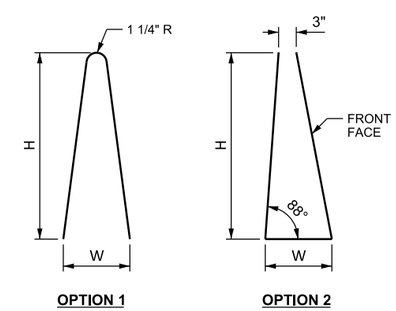

DESIGN-ONLY NOTES:

A. SEE STD DWG BA 1B THROUGH BA 1D FOR TYPICAL LAYOUT REQUIREMENTS.

NOTES:

1. SEE STD DWG BA 1A1 FOR GENERAL NOTES.
2. SEE "BARRIER CONNECTION DETAILS" ON STD DWG BA 1A2 FOR CONNECTION LOOP DETAILS. PLACE THE APPROPRIATE CONNECTION LOOP CONFIGURATION THAT CORRESPONDS WITH ADJACENT PRECAST BARRIER.
3. BARRIER SHAPE VARIES LINEARLY OVER LENGTH OF BARRIER TRANSITION.
4. BARRIER TRANSITIONS MAY BE LENGTHENED, WITH ENGINEER'S APPROVAL, TO ELIMINATE A GAP BETWEEN PRECAST AND CAST-IN-PLACE SECTIONS.
5. DRILL AND EPOXY BOND P1 BARS OR HAND POSITION WHILE CONCRETE IS IN A WORKABLE FORM WHEN USING PCCP PAVEMENT.
6. THE ENGINEER APPROVES CONTRACTOR DEVISED METHOD OF POSITIONING THE LONGITUDINAL REINFORCING STEEL ±1/2 INCH AS DIMENSIONED.

REVISIONS

NO.	DATE	APPR.	REMARKS

UTAH DEPARTMENT OF TRANSPORTATION
STANDARD DRAWINGS FOR ROAD AND BRIDGE CONSTRUCTION
SALT LAKE CITY, UTAH

RECOMMENDED FOR APPROVAL — JAN. 01, 2017 DATE
CHAIRMAN STANDARDS COMMITTEE APPROVED — JAN. 01, 2017 DATE
DEPUTY DIRECTOR — DATE

CAST-IN-PLACE
CONCRETE HALF BARRIER -
42 INCH CONSTANT SLOPE,
32 INCH NEW JERSEY
SHAPE BARRIER
TRANSITION
STANDARD DRAWING TITLE

STD. DWG. NO.
BA 3K5

28-NOV-2016 DGN File:L:\Standard.Drawings\Imperial\2017 Approved\1-All Drawings\BA03K5.dgn

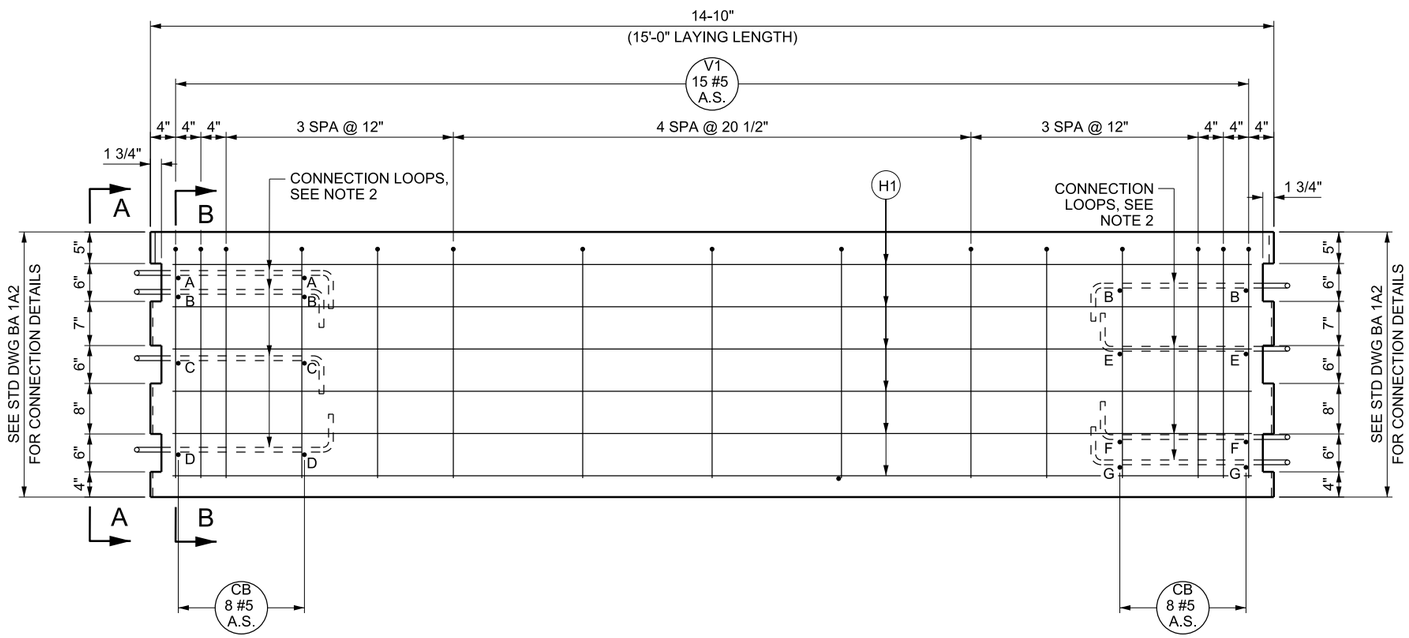

ELEVATION

BAR MARK	BAR SIZE	NO. BARS	LOCATION	SKETCH
H1	#5	12	HORIZONTAL IN BARRIER TIED INSIDE V1 BARS	14'-3"
CB	#4	16	CROSS BARS (CB) TIED TO V1 BARS	ID / L / QTY: A 4 1/2" 2; B 5" 4; C 7" 2; D 10" 2; E 6 1/2" 2; F 9 1/2" 2; G 10" 2 — L
V1	#5	15	VERTICAL IN BARRIER	3 1/2", 7 1/4", 38 1/2", 1 3/4" R, 37 3/4", 11° — OPTION 1; 3 1/4", 7 1/2", 38 1/2", 39 1/4", 79°, 10 5/8" — OPTION 2

TOTAL LENGTH:
OPTION 1 = 6'-7 5/8"
OPTION 2 = 7'-4 3/8"

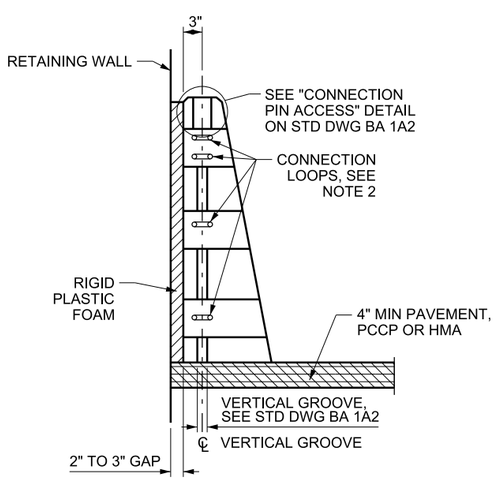

VIEW A-A

AT RETAINING WALL

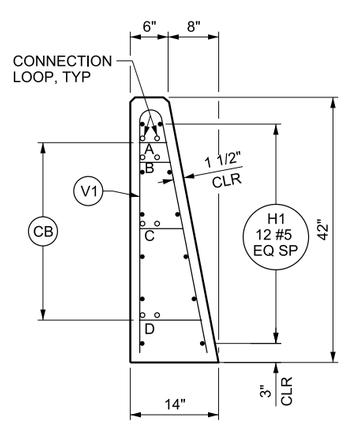

SECTION B-B

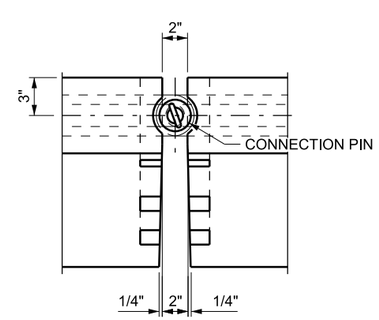

PARTIAL PLAN

DESIGN-ONLY NOTES:

A. DO NOT USE AS RETAINING BARRIER. REFER TO STD DWG BA 1C FOR RETAINING BARRIER APPLICATIONS.
B. USE ONLY IN FRONT OF A RETAINING WALL. DO NOT USE IN A WORK ZONE APPLICATION.

NOTES:

1. SEE STD DWG BA 1A1 AND BA 1A2 FOR GENERAL NOTES.
2. SEE "BARRIER CONNECTION DETAILS" ON STD DWG BA 1A2 FOR CONNECTION LOOP DETAILS.
3. EACH BARRIER UNIT WEIGHS 3.2 TONS.

REVISIONS

NO.	DATE	APPR.	REMARKS

UTAH DEPARTMENT OF TRANSPORTATION
STANDARD DRAWINGS FOR ROAD AND BRIDGE CONSTRUCTION
SALT LAKE CITY, UTAH

RECOMMENDED FOR APPROVAL — JAN. 01, 2017 DATE
CHAIRMAN STANDARDS COMMITTEE APPROVED — JAN. 01, 2017 DATE
DEPUTY DIRECTOR

PRECAST CONCRETE CONSTANT SLOPE HALF BARRIER - 42 INCH

STANDARD DRAWING TITLE

STD. DWG. NO.
BA 3L

28-NOV-2016 DGN File:L:\Standard_Drawings\Imperial\2017 Approved\1-All Drawings\BA03L.dgn

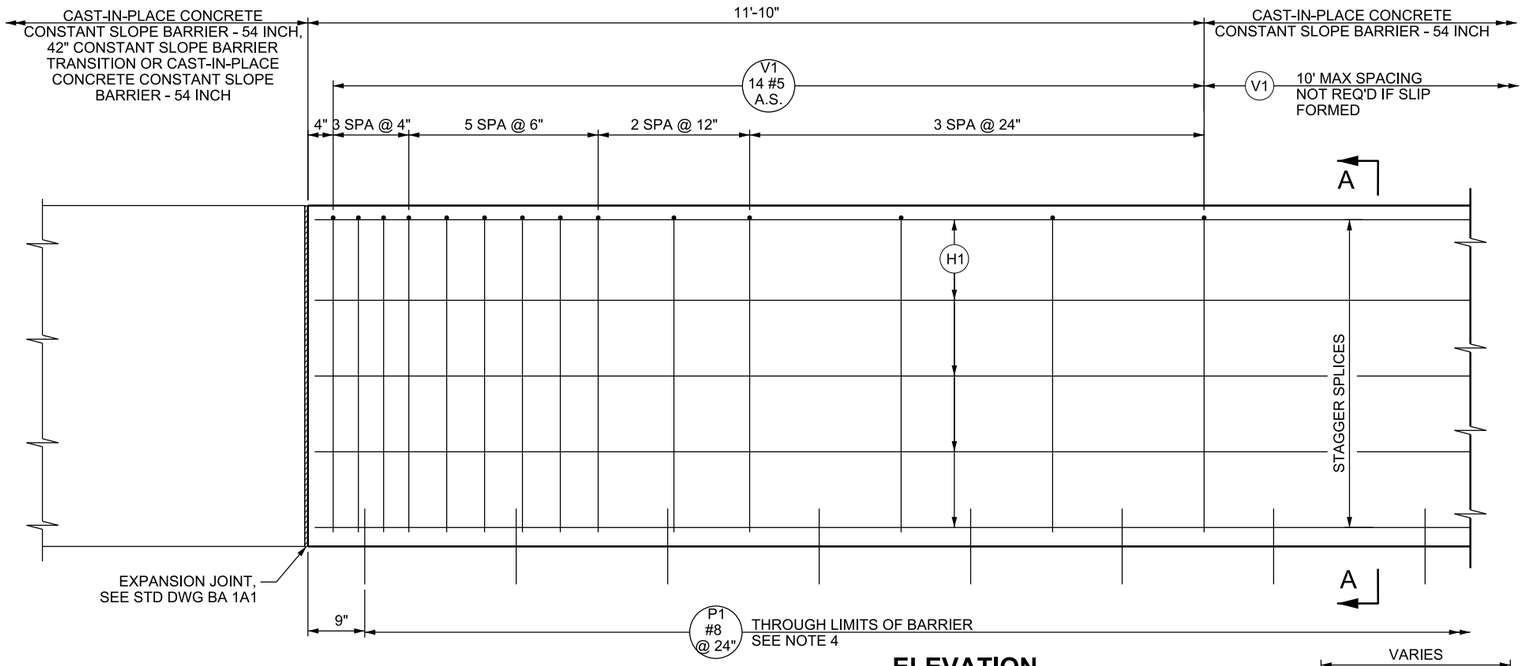

ELEVATION

54" CONSTANT SLOPE BARRIER SHOWN, STEPPED MEDIAN BARRIER SIMILAR

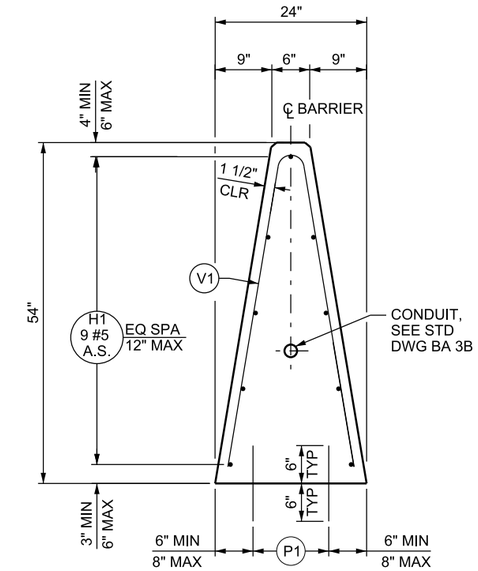

SECTION A-A

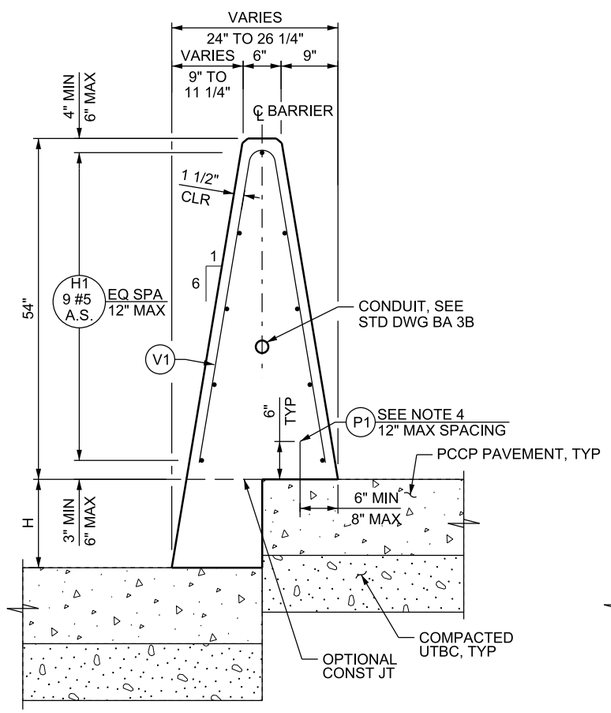

STEPPED MEDIAN BARRIER

H = 0 INCH TO 14 INCH (PCCP ONLY)

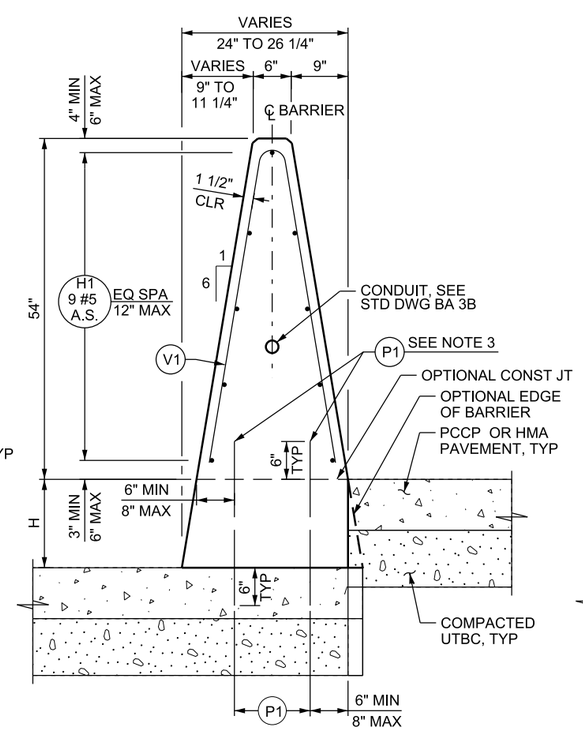

STEPPED MEDIAN BARRIER

H = 0 INCH TO 14 INCH (PCCP OR HMA)

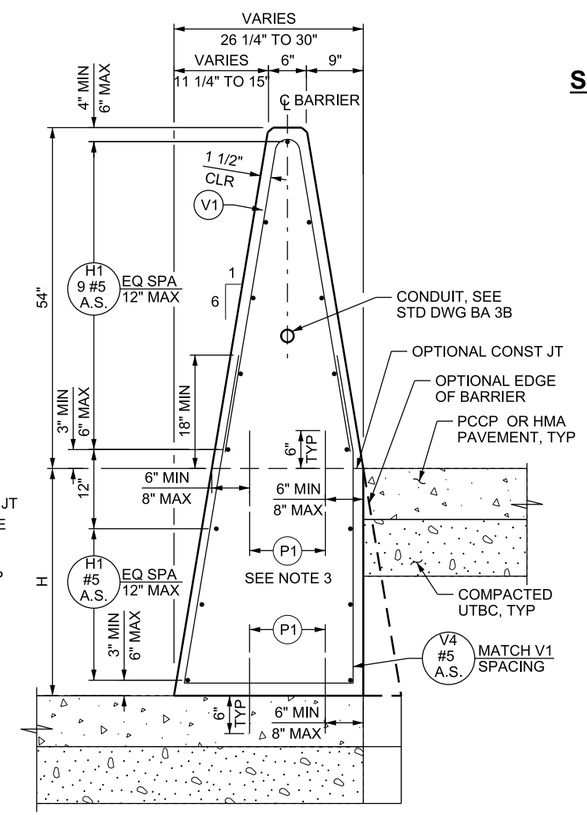

STEPPED MEDIAN BARRIER

H = 14 INCH TO 36 INCH

DESIGN-ONLY NOTES:

A. SEE STD DWG BA 1B THROUGH BA 1D FOR TYPICAL LAYOUT REQUIREMENTS.

NOTES:

1. SEE STD DWG BA 1A1 FOR GENERAL NOTES.
2. V4 BAR SPACING MATCHES V1 SPACING SHOWN IN ELEVATION.
3. P1 BARS THROUGH THE OPTIONAL CONSTRUCTION JOINT ARE NOT REQUIRED IF THE CONSTRUCTION JOINT IS NOT USED OR IF V4 BAR IS PRESENT.
4. USE A MAXIMUM OF 12 INCH SPACING FOR P1 BARS. SEE STEPPED MEDIAN BARRIER DETAILS FOR APPLICABLE LOCATION.

REVISIONS				
NO.	DATE	APPR.	REMARKS	

UTAH DEPARTMENT OF TRANSPORTATION
STANDARD DRAWINGS FOR ROAD AND BRIDGE CONSTRUCTION
SALT LAKE CITY, UTAH

RECOMMENDED FOR APPROVAL — JAN.01.2017 DATE
CHAIRMAN STANDARDS COMMITTEE APPROVED — JAN.01.2017 DATE
DEPUTY DIRECTOR

CAST-IN-PLACE CONCRETE CONSTANT SLOPE BARRIER - 54 INCH 1 OF 3

STANDARD DRAWING TITLE

STD. DWG. NO.
BA 3M1

DGN File: L:\Standard Drawings\Imperial\2017 Approved\1-All Drawings\BA03M1.dgn
28-NOV-2016

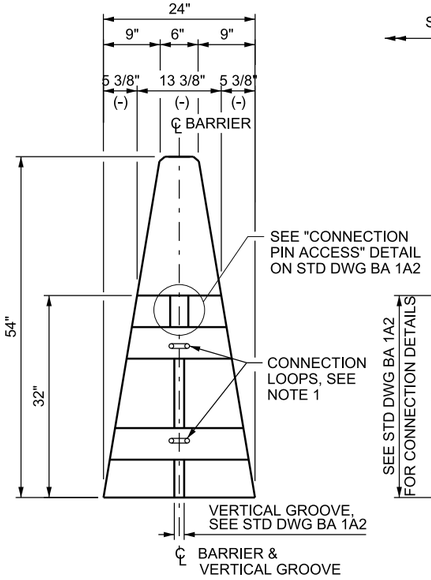

VIEW B-B

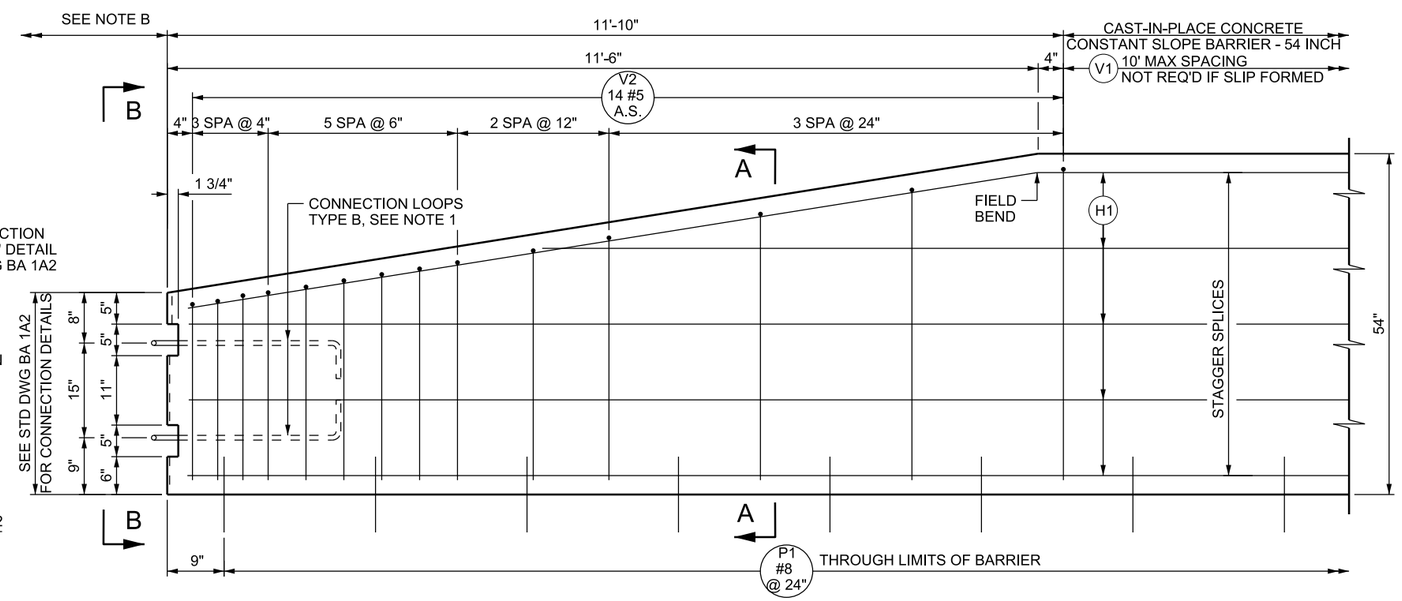

ELEVATION - APPROACH END SECTION

TL-3 SHOWN; TL-5 SIMILAR

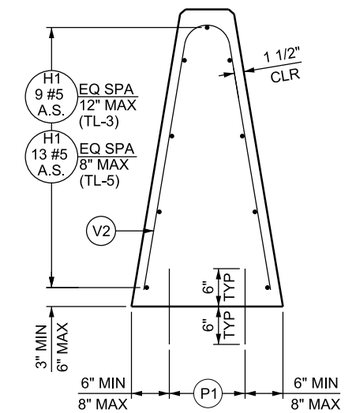

SECTION A-A

TL-3 SHOWN; TL-5 SIMILAR

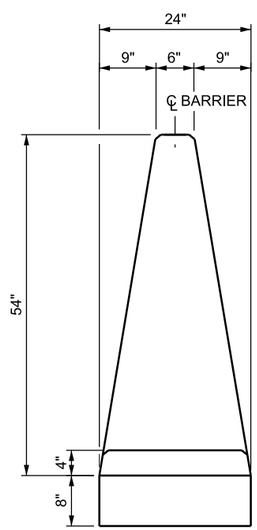

VIEW D-D

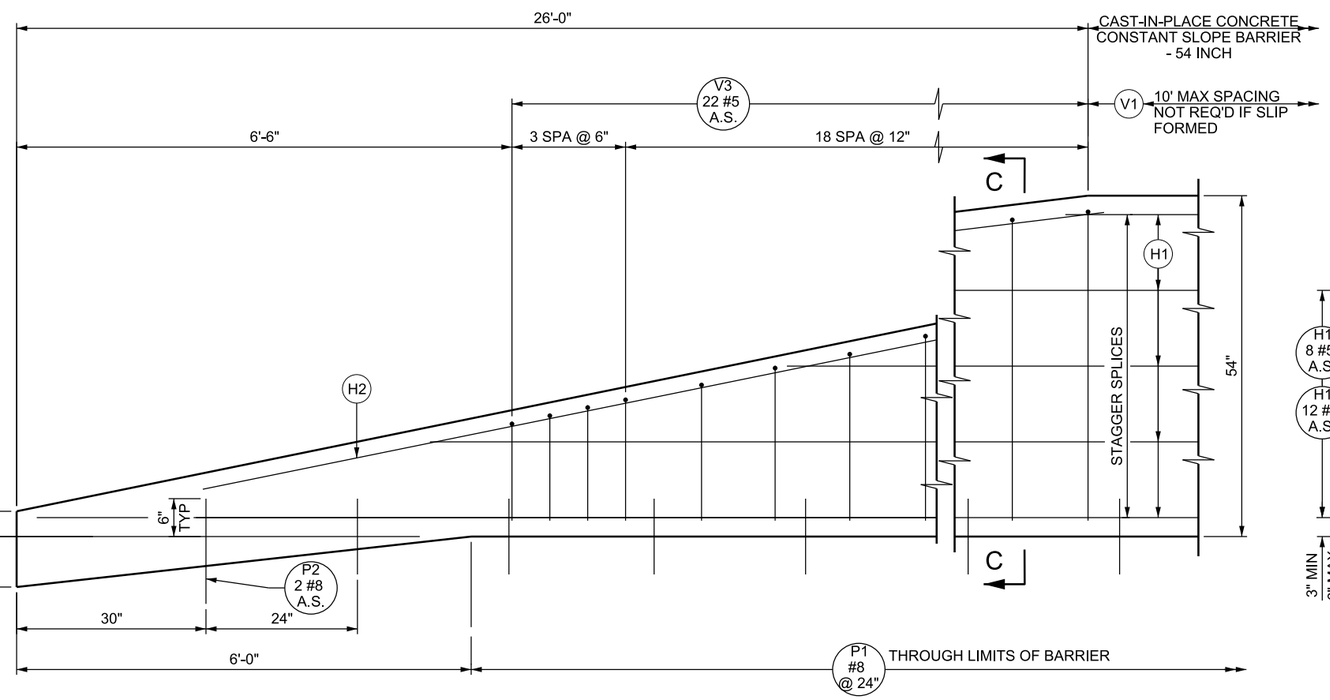

ELEVATION - TRAILING SLOPED END SECTION

TL-3 SHOWN; TL-5 SIMILAR

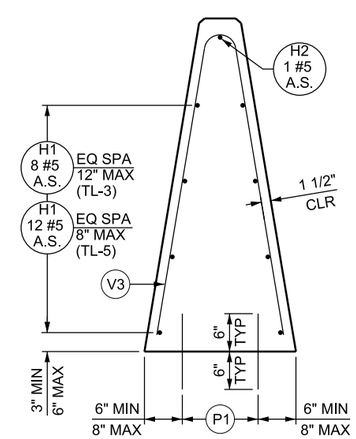

SECTION C-C

TL-3 SHOWN; TL-5 SIMILAR

DESIGN-ONLY NOTES:

A. USE A TRAILING SLOPED END SECTION ON THE TRAILING END OF BARRIER WHEN THE END IS OUTSIDE THE MAXIMUM REQUIRED AASHTO CLEAR ZONE OF OPPOSING TRAFFIC. USE IS PERMITTED ON APPROACH END WHEN DESIGN SPEED IS 40 MPH OR LESS.

B. USE AN APPROACH END SECTION ON THE END OF BARRIER WHEN AN END TREATMENT OR CRASH CUSHION IS REQ'D.

NOTES:

1. SEE "BARRIER CONNECTION DETAIL" ON STD DWG BA 1A2 FOR CONNECTION LOOP DETAILS.

2. USE H1 AND P1 BARS CONSISTENT WITH THE TEST LEVEL RATING OF ADJACENT BARRIER.

REVISIONS

NO.	DATE	APPR.	REMARKS

UTAH DEPARTMENT OF TRANSPORTATION
STANDARD DRAWINGS FOR ROAD AND BRIDGE CONSTRUCTION
SALT LAKE CITY, UTAH

RECOMMENDED FOR APPROVAL — JAN.01.2017 DATE
CHAIRMAN STANDARDS COMMITTEE — JAN.01.2017 DATE
APPROVED — DEPUTY DIRECTOR

CAST-IN-PLACE CONCRETE CONSTANT SLOPE BARRIER - 54 INCH 2 OF 3

STANDARD DRAWING TITLE

STD. DWG. NO.
BA 3M2

DGN File: L:\Standard Drawings\Imperial\2017 Approved\1-All Drawings\BA03M2.dgn
28-NOV-2016

CONSTANT SLOPE BARRIER REINFORCING

BAR MARK	BAR SIZE	LOCATION	SKETCH
P1	#8	PAVEMENT TO BARRIER THROUGH LIMITS OF BARRIER (VERTICAL)	TL-3: 12", 12", 3" — OPTION 1, OPTION 2 TL-5 OR SCUPPER BARRIER: 24", 24", 3" — OPTION 1, OPTION 2
P2	#8	PAVEMENT TO BARRIER AT TRAILING SLOPED END SECTION	16" — OPTION 1 16", 3" — OPTION 2
H1	#5	HORIZONTAL IN BARRIER TIED INSIDE V1 BARS CONTINUOUS THROUGH LENGTH OF BARRIER	36" SPLICE
H2	#5	HORIZONTAL IN BARRIER ALONG TOP FACE AT TRAILING SLOPED END SECTION	25'-9"
V1	#5	VERTICAL IN BARRIER TOTAL LENGTH: OPTION 1 = 8'-6 3/4" OPTION 2 = 10'-0"	49 1/2", 19°, 48 1/2" TYP, 20" — OPTION 1 49 1/2", 19°, 80.5°, 80.5°, 50 1/8" TYP, 20" — OPTION 2
V2	#5	VERTICAL IN APPROACH END SECTION	* VARIES WITH H
V3	#5	VERTICAL IN TRAILING SLOPED END SECTION	* VARIES WITH H

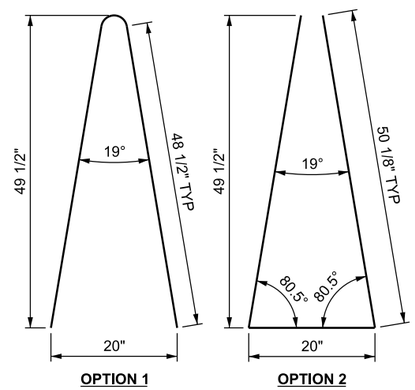

H	QTY
49 1/2"	1
46 1/2"	1
42 1/2"	1
38 1/2"	1
37"	1
35"	1
34"	1
33"	1
32"	1
31"	1
30"	1
29 1/2"	1
29"	1
28"	1

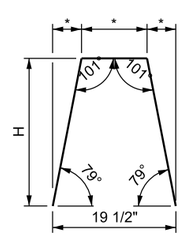

H	QTY
49 1/2"	1
47 1/2"	1
451/2"	1
43 1/2"	1
42"	1
40"	1
38"	1
36"	1
34"	1
32"	1
30 1/2"	1
28 1/2"	1
26 1/2"	1
24 1/2"	1
22 1/2"	1
20 1/2"	1
18 1/2"	1
17"	1
15"	1
14"	1
13"	1
12"	1

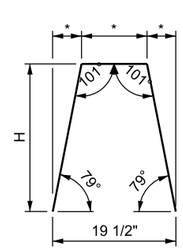

CONSTANT SLOPE BARRIER REINFORCING

BAR MARK	BAR SIZE	LOCATION	SKETCH
V4	#5	VERTICAL IN STEPPED MEDIAN BARRIER	14", 3", 18", 80.5°, 170.5°, H - 3", VARIES — OPTION 1 14", 19°, H + 15", 80.5°, 80.5°, VARIES — OPTION 2

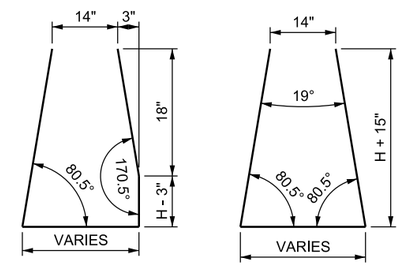

NOTES:

1. DRILL AND EPOXY BOND P1 BARS OR HAND POSITION WHILE CONCRETE IS IN A WORKABLE FORM WHEN USING PCCP PAVEMENT.

2. THE ENGINEER APPROVES CONTRACTOR DEVISED METHOD OF POSITIONING THE LONGITUDINAL REINFORCING STEEL ±1/2 INCH AS DIMENSIONED.

3. SEE STD DWG BA 3M1 AND BA 3M2 FOR REINFORCING STEEL LOCATION.

REVISIONS

NO.	DATE	APPR.	REMARKS

UTAH DEPARTMENT OF TRANSPORTATION
STANDARD DRAWINGS FOR ROAD AND BRIDGE CONSTRUCTION
SALT LAKE CITY, UTAH

RECOMMENDED FOR APPROVAL — JAN.01.2017 DATE
CHAIRMAN: STANDARDS COMMITTEE APPROVED — JAN.01.2017 DATE
DEPUTY DIRECTOR

CAST-IN-PLACE CONCRETE CONSTANT SLOPE BARRIER - 54 INCH 3 OF 3

STANDARD DRAWING TITLE

STD. DWG. NO.
BA 3M3

DGN File: L:\Standard_Drawings\Imperial\2017 Approved\1-All Drawings\BA03M3.dgn
28-NOV-2016

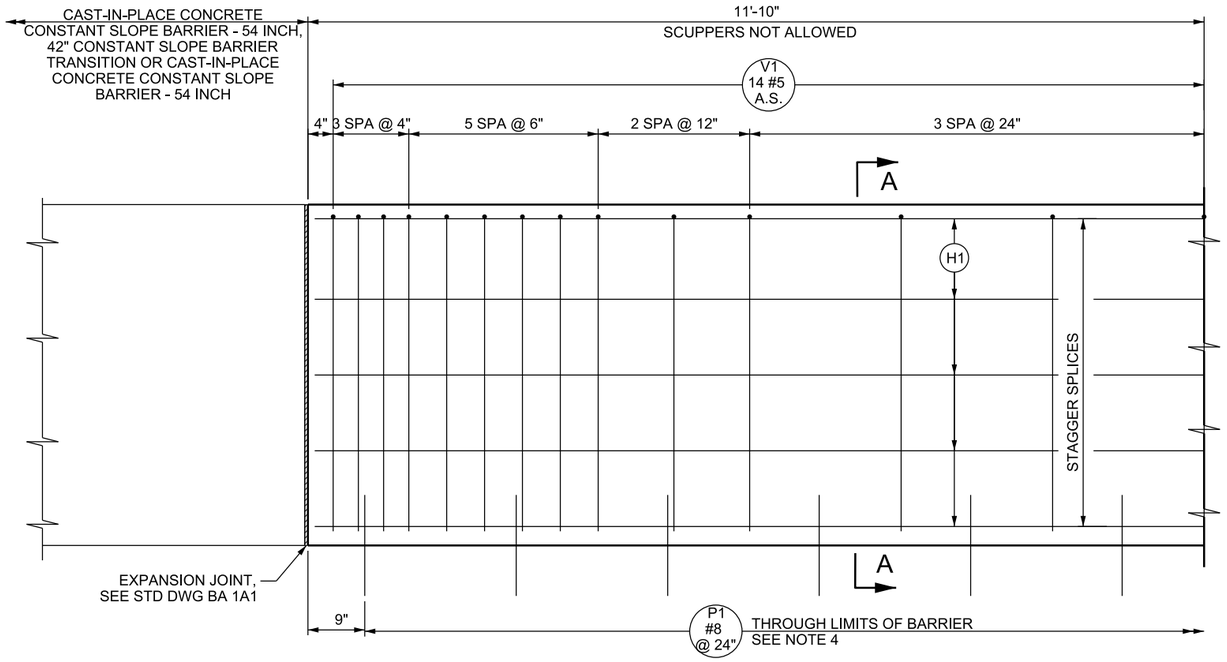

ELEVATION

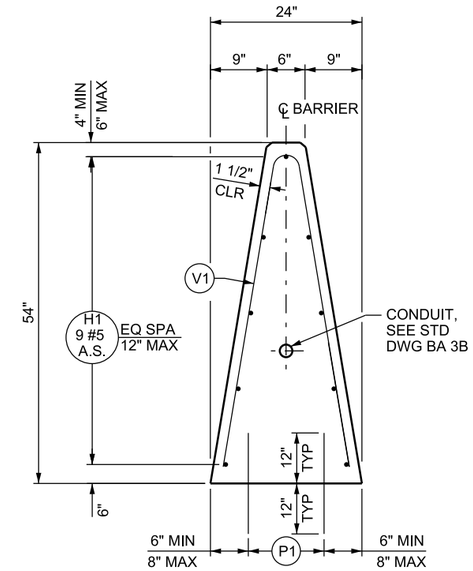

SECTION A-A

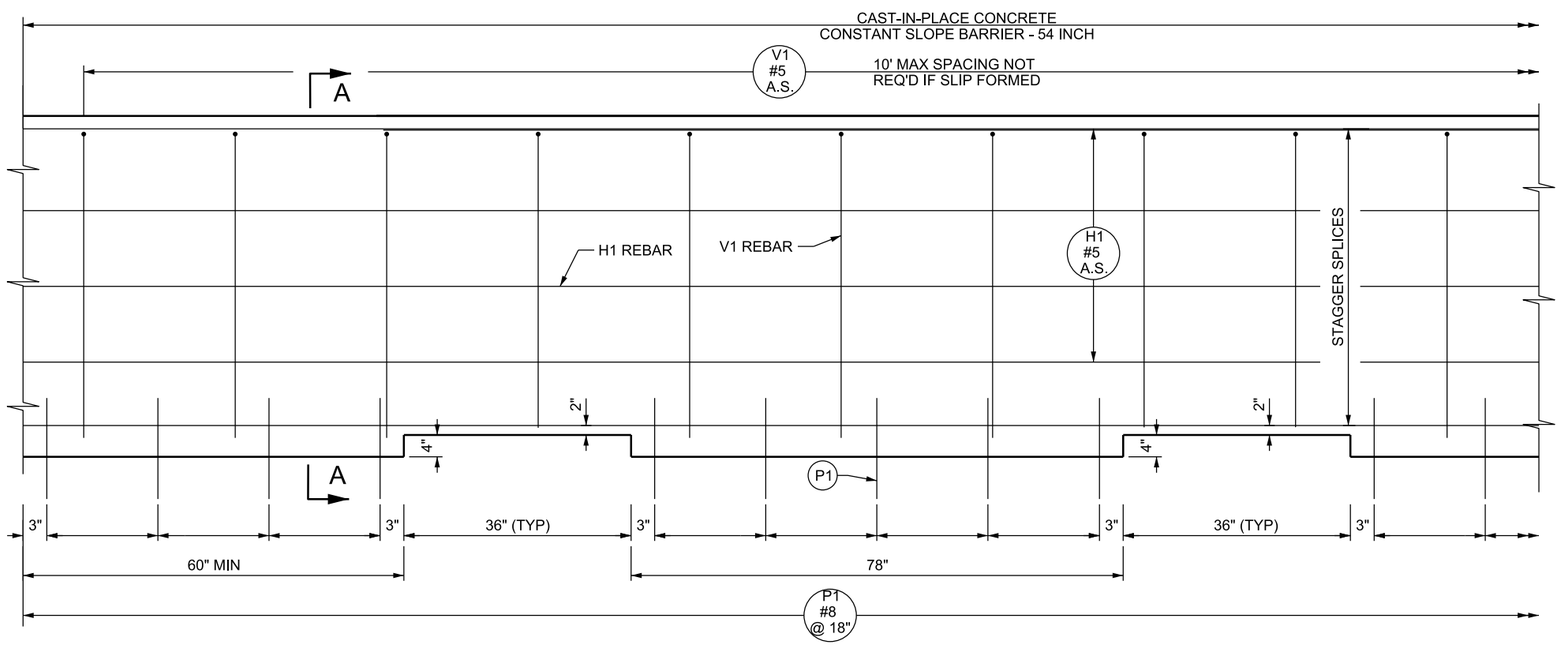

ELEVATION

DESIGN-ONLY NOTES:

A. SEE STD DWG BA 1B THROUGH BA 1D FOR TYPICAL LAYOUT REQUIREMENTS.

B. INDICATE ON PLAN SET WHEN BARRIER SECTIONS WITH SCUPPERS ARE REQUIRED.

NOTES:

1. SEE "BARRIER CONNECTION DETAILS" ON STD DWG BA 1A2 FOR CONNECTION LOOP DETAILS.
2. DRILL AND EPOXY BOND P1 BARS OR HAND POSITION WHILE CONCRETE IS IN A WORKABLE FORM WHEN USING PCCP PAVEMENT.
3. THE ENGINEER APPROVES CONTRACTOR DEVISED METHOD OF POSITIONING THE LONGITUDINAL REINFORCING STEEL ±1/2 INCH AS DIMENSIONED.
4. SEE STD DWG BA 3M3 FOR REINFORCING SCHEDULE AND NOTES.
5. PROVIDE SCUPPERS AS SHOWN.
6. DO NOT USE BARRIER SEAL WHEN SCUPPERS ARE PRESENT ON BARRIER.
7. SEE STD DWG BA 3A2 FOR APPROACH AND TRAILING END TREATMENTS. NO EXPANSION JOINT REQUIRED.
8. SEE STD DWG BA 1A1 FOR GENERAL NOTES.

REVISIONS

NO.	DATE	APPR.	REMARKS

UTAH DEPARTMENT OF TRANSPORTATION
STANDARD DRAWINGS FOR ROAD AND BRIDGE CONSTRUCTION
SALT LAKE CITY, UTAH

RECOMMENDED FOR APPROVAL — JAN.01.2017 DATE

CHAIRMAN STANDARDS COMMITTEE APPROVED — JAN.01.2017 DATE

DEPUTY DIRECTOR

CAST-IN-PLACE CONCRETE CONSTANT SLOPE BARRIER WITH SCUPPERS - 54 INCH

STANDARD DRAWING TITLE

STD. DWG. NO.

BA 3M4

DGN File: L:\Standard Drawings\Imperial\2017 Approved\1-All Drawings\BA03M4.dgn
28-NOV-2016

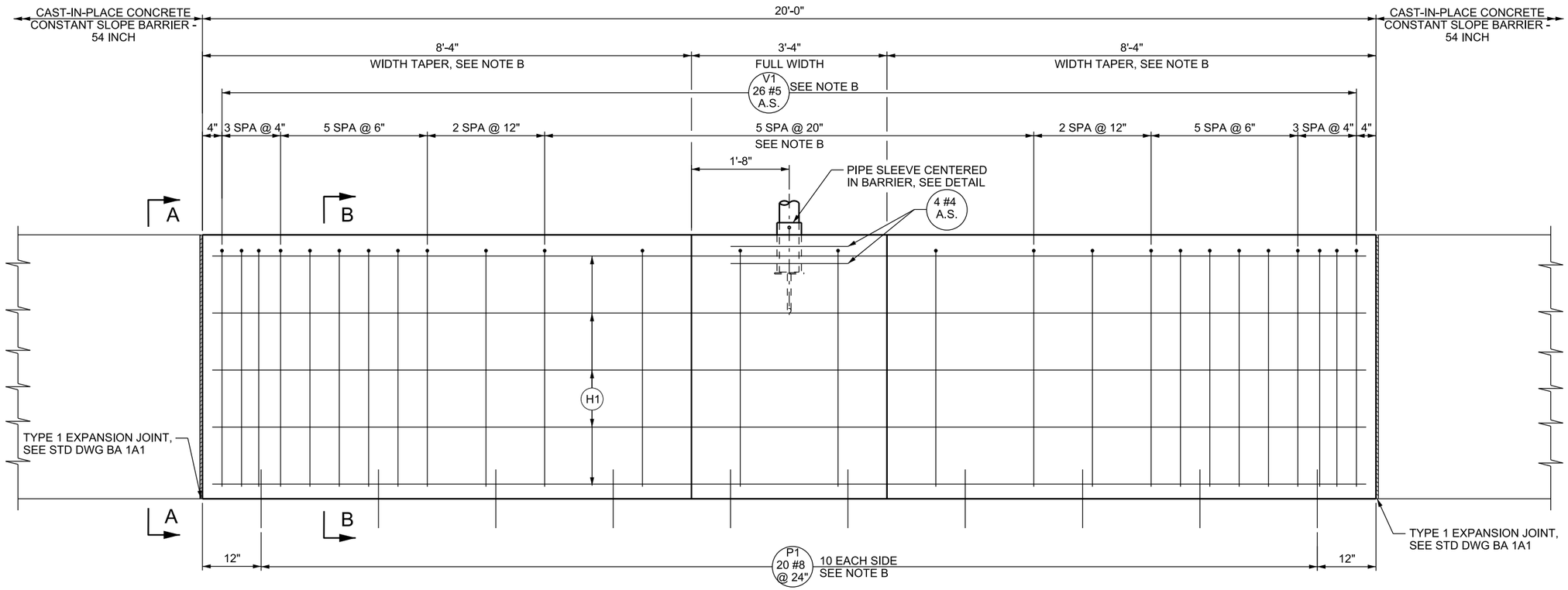

ELEVATION

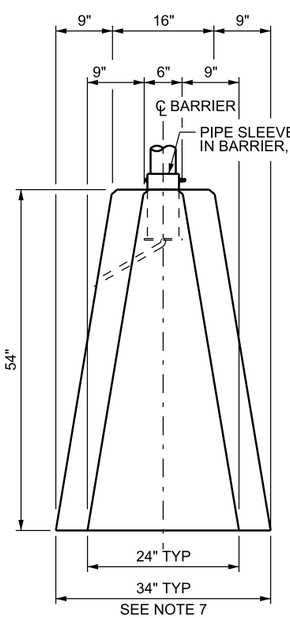

VIEW A-A

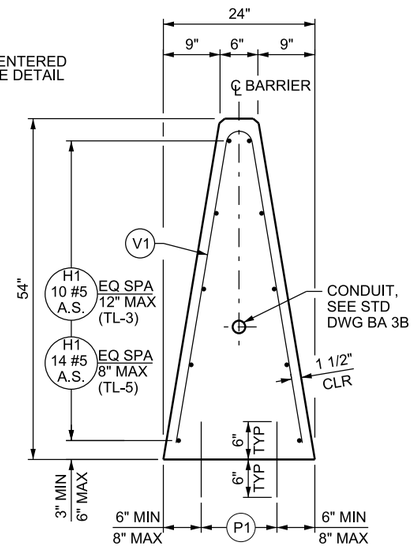

SECTION B-B

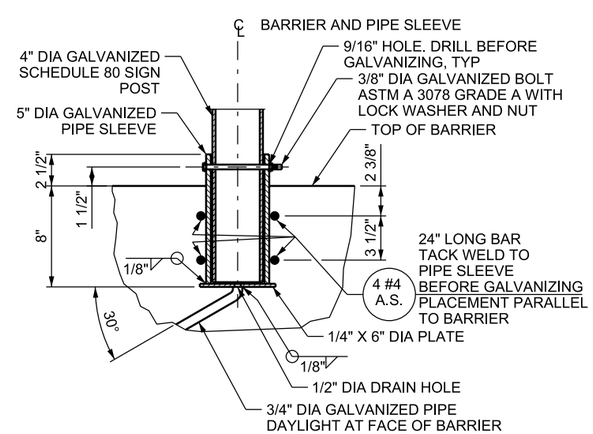

PIPE SLEEVE DETAIL

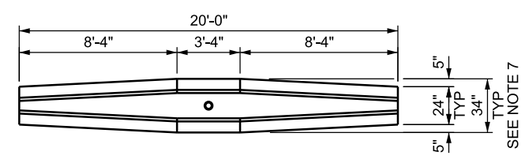

PLAN

DESIGN-ONLY NOTES:

A. SEE STD DWG BA 1B THROUGH BA 1D FOR TYPICAL LAYOUT REQUIREMENTS.

B. INCREASE LENGTH OF WIDTH TAPER AS NECESSARY TO PROVIDE APPROPRIATE FLARE RATE PER ROADSIDE DESIGN GUIDE. ADJUST REINFORCEMENT LENGTHS AS NECESSARY. ADD P1, V1 AND V2 BARS IN THE MIDDLE OF THE BARRIER TO MAINTAIN MAXIMUM SPACING.

NOTES:

1. SEE STD DWG BA 1A1 FOR GENERAL NOTES.
2. SEE SN SERIES STD DWG FOR SIGN MOUNTING, HARDWARE, AND PLACEMENT REQUIREMENTS. MAXIMUM SIGN PANEL AREA IS 36 SQ FT.
3. SEE STD DWG BA 3N2 FOR REINFORCING SCHEDULE.
4. USE PIPES CONFORMING TO ASTM A 53 GRADE B, ASTM A 500 GRADE B, OR ASTM API 5L GRADE B/X42. GALVANIZE IN ACCORDANCE WITH ASTM A 123 AFTER FABRICATION IS COMPLETED.
6. USE H1 AND P1 BARS CONSISTENT WITH THE TEST LEVEL RATING OF ADJACENT BARRIER.
7. TYPICAL SECTION SHOWN. VARY WIDTH AS SHOWN IF MEDIAN BARRIER IS STEPPED. REFER TO STD DWG 3M1 OR 3O2 AND ADJUST V4 BARS SIMILAR TO V1 BAR ADJUSTMENTS.

REVISIONS

NO.	DATE	APPR.	REMARKS

UTAH DEPARTMENT OF TRANSPORTATION
STANDARD DRAWINGS FOR ROAD AND BRIDGE CONSTRUCTION
SALT LAKE CITY, UTAH

RECOMMENDED FOR APPROVAL — JAN.01.2017 DATE
CHAIRMAN STANDARDS COMMITTEE APPROVED — JAN.01.2017 DATE
DEPUTY DIRECTOR

CAST-IN-PLACE CONCRETE CONSTANT SLOPE BARRIER - 54 INCH, MEDIAN SMALL SIGN SECTION 1 OF 2

STANDARD DRAWING TITLE

STD. DWG. NO.
BA 3N1

DGN File:L:\Standard_Drawings\Imperial\2017 Approved\1-All Drawings\BA03N1.dgn
28-NOV-2016

BAR MARK	BAR SIZE	NO. BARS	LOCATION	SKETCH
P1	#8	20	PAVEMENT TO BARRIER (VERTICAL)	TL-3: 12" OPTION 1; 12" 3" OPTION 2 TL-5: 24" OPTION 1; 24" 3" OPTION 2
H1	#5	10 (TL-3) 14 (TL-5)	HORIZONTAL IN BARRIER TIED TO INSIDE OF V1 AND V3 BARS VERTICAL IN BARRIER	8'-2" 3'-4" 8'-2"; 6 1/8"
V1	#5	26	TOTAL LENGTH = 23'-8"	

W	QTY
4"	2
4 1/2"	4
5"	2
5 1/2"	2
6 1/2"	2
7"	2
7 1/2"	2
8"	2
9 1/2"	2
10 1/2"	2
13"	2
13 1/2"	2

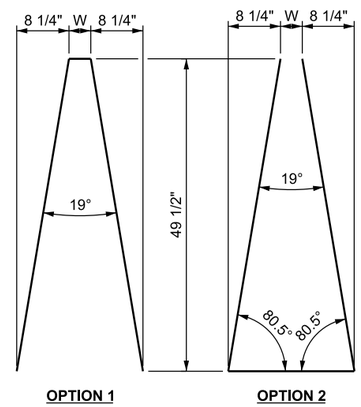

NOTES:

1. SEE STD DWG BA 3N1 FOR REINFORCING LOCATIONS.
2. DRILL AND EPOXY BOND P1 BARS OR HAND POSITION WHILE CONCRETE IS IN A WORKABLE FORM WHEN USING PCCP PAVEMENT.

REVISIONS

NO.	DATE	APPR.	REMARKS

UTAH DEPARTMENT OF TRANSPORTATION
STANDARD DRAWINGS FOR ROAD AND BRIDGE CONSTRUCTION
SALT LAKE CITY, UTAH

RECOMMENDED FOR APPROVAL — JAN.01.2017 DATE
CHAIRMAN STANDARDS COMMITTEE APPROVED — JAN.01.2017 DATE
DEPUTY DIRECTOR

STANDARD DRAWING TITLE
CAST-IN-PLACE CONCRETE CONSTANT SLOPE BARRIER - 54 INCH, MEDIAN SMALL SIGN SECTION 2 OF 2

STD. DWG. NO.
BA 3N2

28-NOV-2016 DGN Files:L:\Standard_Drawings\Imperial\2017 Approved\All Drawings\BA03N2.dgn

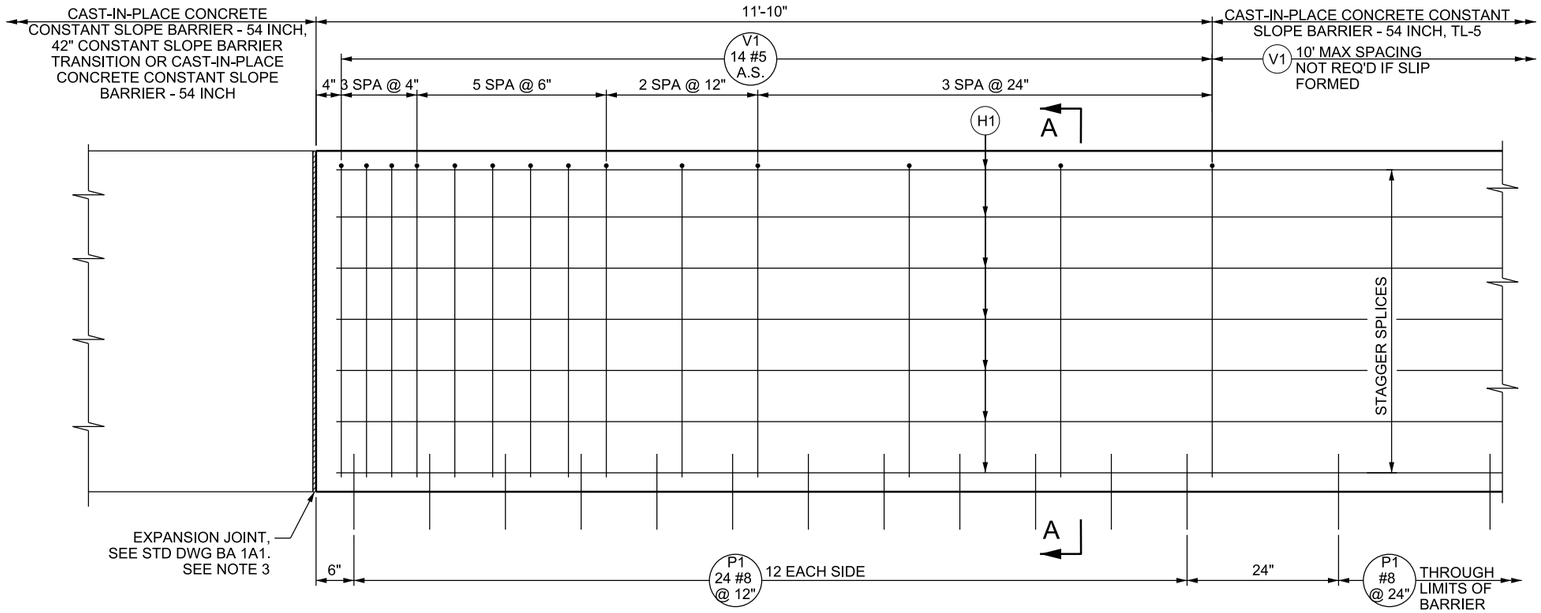

ELEVATION

BARRIER ON PCCP

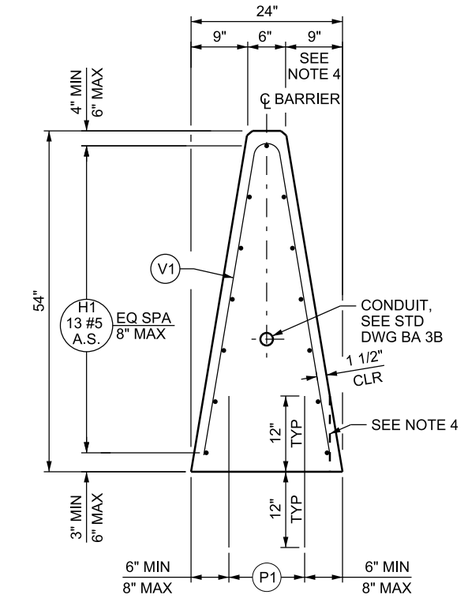

SECTION A-A

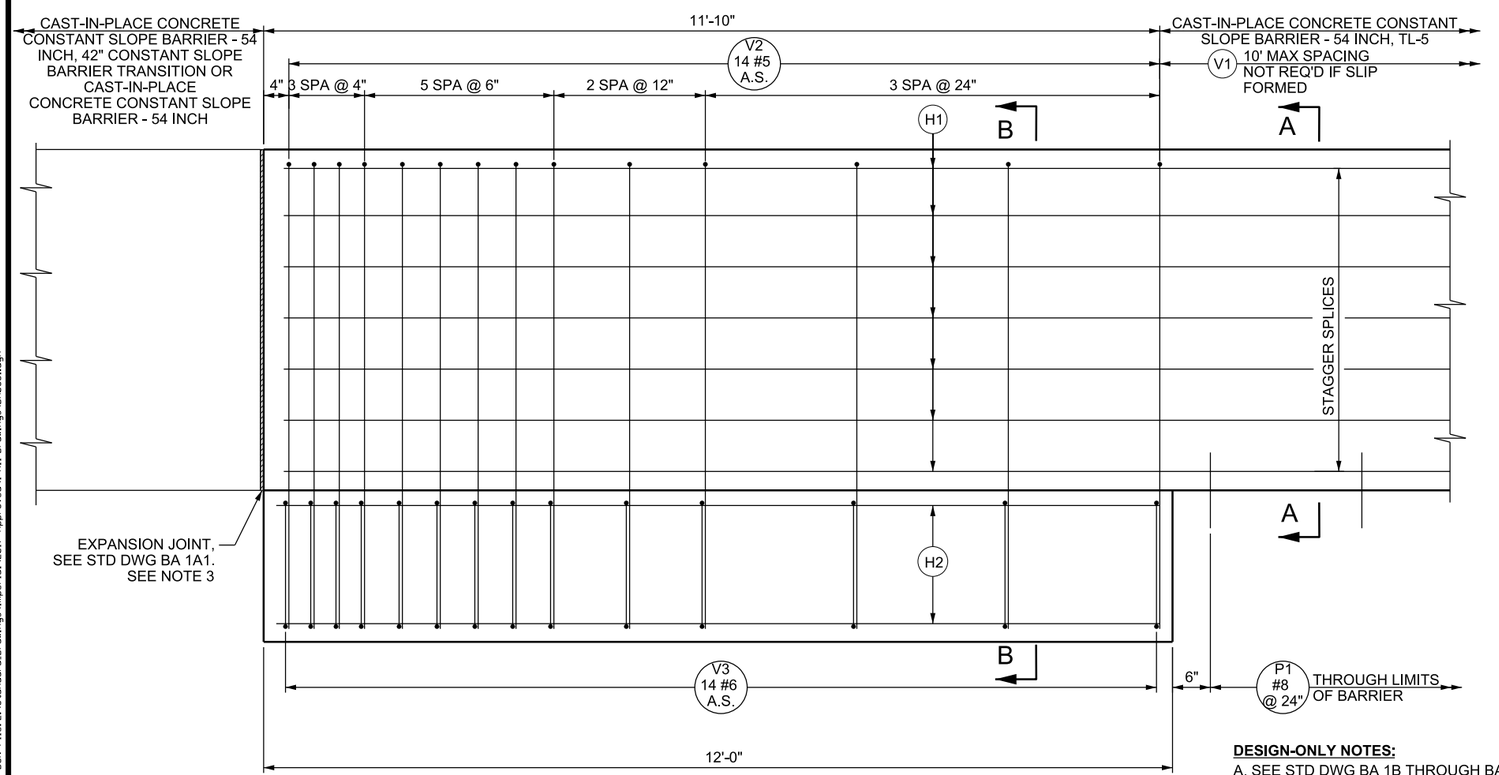

ELEVATION

BARRIER ON HMA

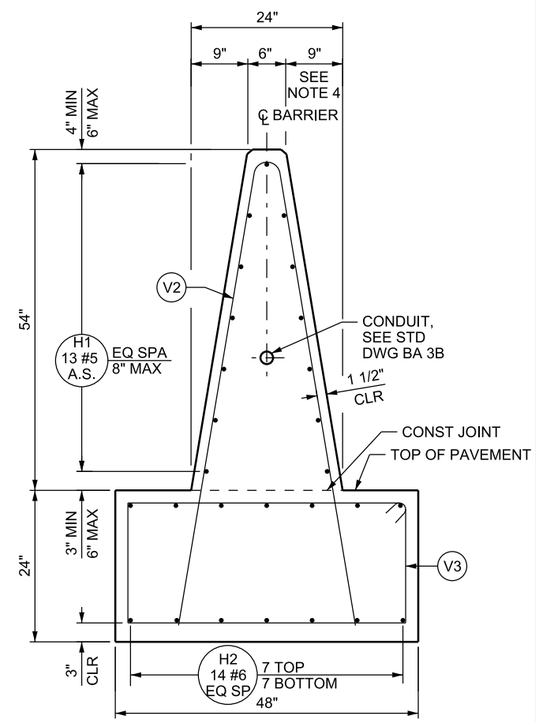

SECTION B-B

DESIGN-ONLY NOTES:

A. SEE STD DWG BA 1B THROUGH BA 1D FOR TYPICAL LAYOUT REQUIREMENTS.

NOTES:

1. SEE STD DWG BA 1A1 FOR GENERAL NOTES.
2. SEE STD DWG BA 3O2 FOR STEPPED MEDIAN DETAILS AND STD DWG BA 3O3 FOR REINFORCING SCHEDULE.
3. SEE STD DGW BA 3M2 FOR APPROACH END AND TRAILING END TREATMENTS. NO EXPANSION JOINT REQUIRED.
4. THE 9 INCH DIMENSION MAY BE REDUCED TO 7 INCHES AS SHOWN TO PROVIDE A MINIMUM 2 INCH CLEARANCE TO THE COLUMN IN COLUMN PROTECTION APPLICATIONS. ADJUST REINFORCEMENT TO PROVIDE MINIMUM COVER.

REVISIONS

NO.	DATE	APPR.	REMARKS

UTAH DEPARTMENT OF TRANSPORTATION

STANDARD DRAWINGS FOR ROAD AND BRIDGE CONSTRUCTION

SALT LAKE CITY, UTAH

RECOMMENDED FOR APPROVAL — JAN.01.2017 DATE

CHAIRMAN STANDARDS COMMITTEE APPROVED — JAN.01.2017 DATE

DEPUTY DIRECTOR

CAST-IN-PLACE CONCRETE CONSTANT SLOPE BARRIER - 54 INCH, TL-5 1 OF 3

STANDARD DRAWING TITLE

STD. DWG. NO.

BA 3O1

DGN File: L:\Standard Drawings\Imperial\2017 Approved\1-All Drawings\BA0301.dgn

28-NOV-2016

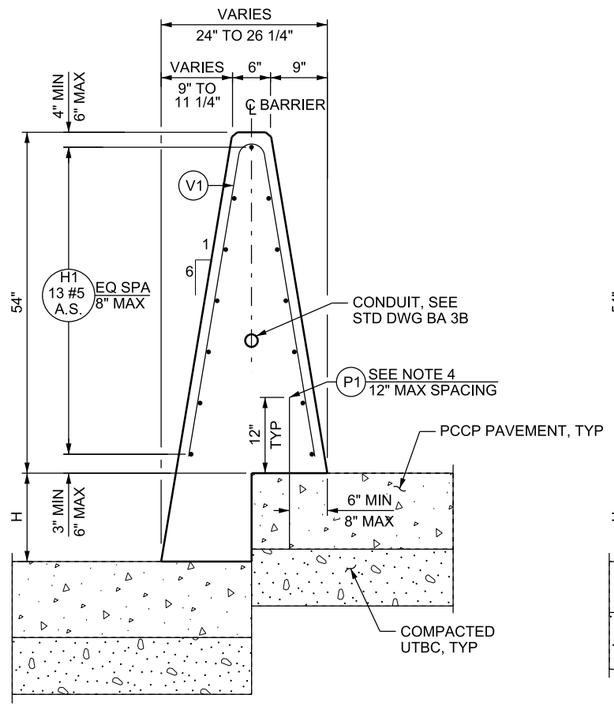

STEPPED MEDIAN BARRIER - PCCP ONLY

H = 0 INCH TO 14 INCH (OPTION 1)

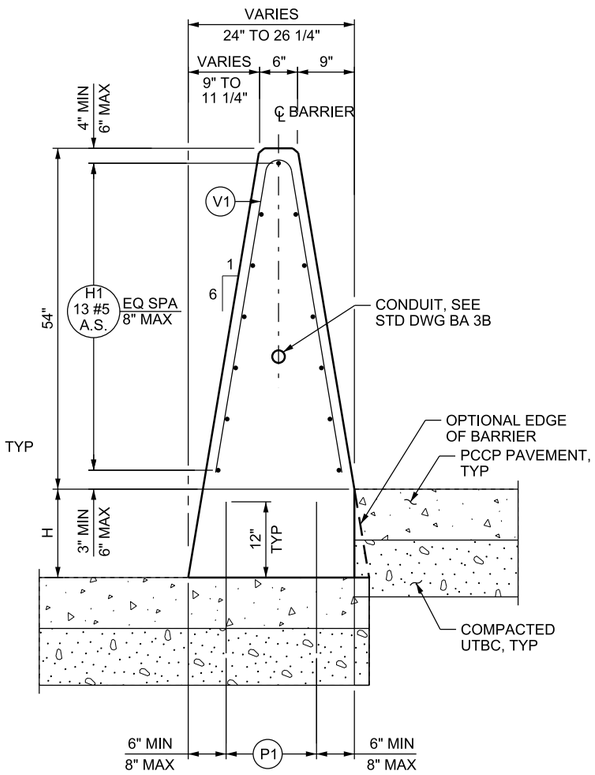

STEPPED MEDIAN BARRIER - PCCP ONLY

H = 0 INCH TO 14 INCH (OPTION 2)

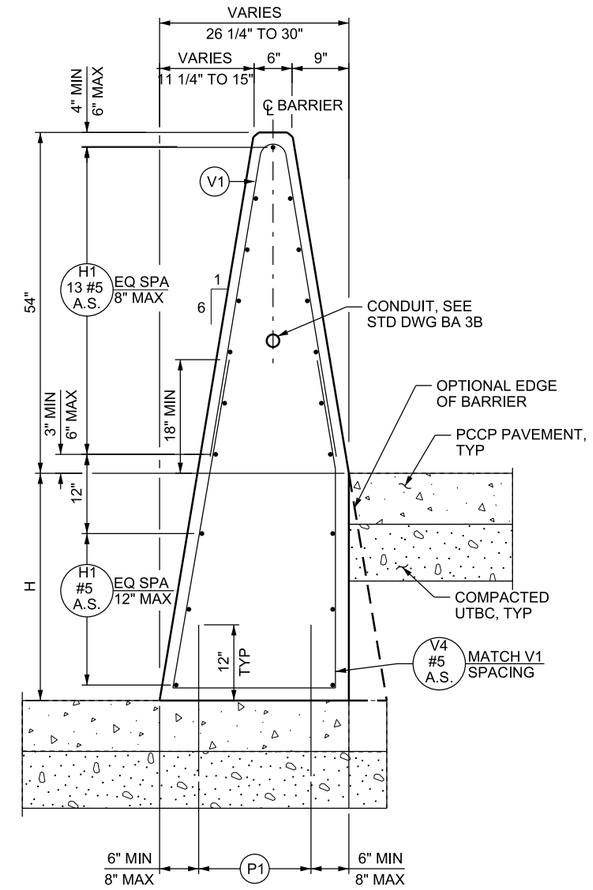

STEPPED MEDIAN BARRIER - PCCP ONLY

H = 14 INCH TO 36 INCH

DESIGN-ONLY NOTES:

A. DO NOT USE STEPPED MEDIAN BARRIER WITH HMA PAVEMENT.

NOTES:

1. DRILL AND EPOXY BOND P1 BARS OR HAND POSITION WHILE CONCRETE IS IN A WORKABLE FORM WHEN USING PCCP PAVEMENT.
2. THE ENGINEER APPROVES CONTRACTOR DEVISED METHOD OF POSITIONING THE LONGITUDINAL REINFORCING STEEL ±1/2 INCH AS DIMENSIONED.
3. V4 BAR SPACING MATCHES V1 SPACING SHOWN IN ELEVATION.
4. DECREASE P1 BAR SPACING BY HALF AS SHOWN ON STD DWG BA 3O1. SEE STEPPED MEDIAN BARRIER DETAILS FOR APPLICABLE LOCATION.
5. DO NOT USE HORIZONTAL CONSTRUCTION JOINTS IN TL-5 BARRIER.

REVISIONS

NO.	DATE	APPR.	REMARKS

UTAH DEPARTMENT OF TRANSPORTATION
STANDARD DRAWINGS FOR ROAD AND BRIDGE CONSTRUCTION
SALT LAKE CITY, UTAH

RECOMMENDED FOR APPROVAL — JAN.01.2017 DATE

CHAIRMAN STANDARDS COMMITTEE APPROVED — JAN.01.2017 DATE

DEPUTY DIRECTOR

CAST-IN-PLACE
CONCRETE CONSTANT
SLOPE BARRIER -
54 INCH, TL-5
2 OF 3

STANDARD DRAWING TITLE

STD. DWG. NO.

BA 3O2

28-NOV-2016 DGN File:L:\Standard_Drawings\Imperial\2017 Approved\1-All Drawings\BA03O2.dgn

CONSTANT SLOPE BARRIER REINFORCING

BAR MARK	BAR SIZE	LOCATION	SKETCH
P1	#8	PAVEMENT TO BARRIER THROUGH LIMITS OF BARRIER (VERTICAL)	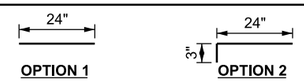
H1	#5	HORIZONTAL IN BARRIER TIED INSIDE V1 BARS CONTINUOUS THROUGH LENGTH OF BARRIER	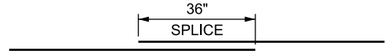
H2	#6	HORIZONTAL IN BARRIER FOOTING	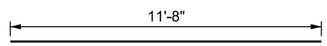
V1	#5	VERTICAL IN BARRIER TOTAL LENGTH: OPTION 1 = 8'-6 3/4" OPTION 2 = 10'-0"	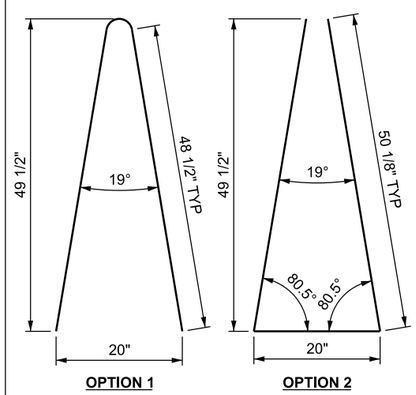
V2	#5	VERTICAL IN BARRIER TOTAL LENGTH: 13'-4"	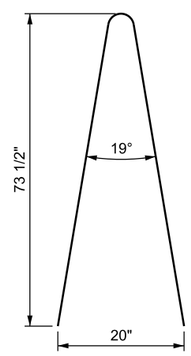
V3	#6	VERTICAL IN BARRIER FOOTING TOTAL LENGTH: 11'-10"	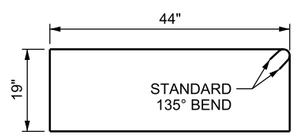

CONSTANT SLOPE BARRIER REINFORCING

BAR MARK	BAR SIZE	LOCATION	SKETCH
V4	#5	VERTICAL IN STEPPED MEDIAN BARRIER	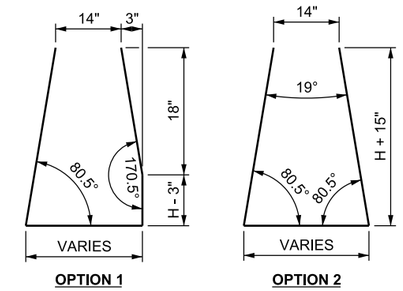

NOTES:

1. DRILL AND EPOXY BOND P1 BARS OR HAND POSITION WHILE CONCRETE IS IN A WORKABLE FORM WHEN USING PCCP PAVEMENT.
2. THE ENGINEER APPROVES CONTRACTOR DEVISED METHOD OF POSITIONING THE LONGITUDINAL REINFORCING STEEL ±1/2 INCH AS DIMENSIONED.
3. SEE STD DWG BA 3O1 AND BA 3O2 FOR REINFORCING STEEL LOCATION.

REVISIONS

NO.	DATE	APPR.	REMARKS

UTAH DEPARTMENT OF TRANSPORTATION
STANDARD DRAWINGS FOR ROAD AND BRIDGE CONSTRUCTION
SALT LAKE CITY, UTAH

RECOMMENDED FOR APPROVAL — JAN.01, 2017 DATE
CHAIRMAN STANDARDS COMMITTEE APPROVED — JAN.01, 2017 DATE
DEPUTY DIRECTOR

CAST-IN-PLACE CONCRETE CONSTANT SLOPE BARRIER - 54 INCH, TL-5 3 OF 3

STANDARD DRAWING TITLE

STD. DWG. NO.
BA 3O3

28-NOV-2016 DGN File: L:\Standard Drawings\Imperial\2017 Approved\1-All Drawings\BA03O3.dgn

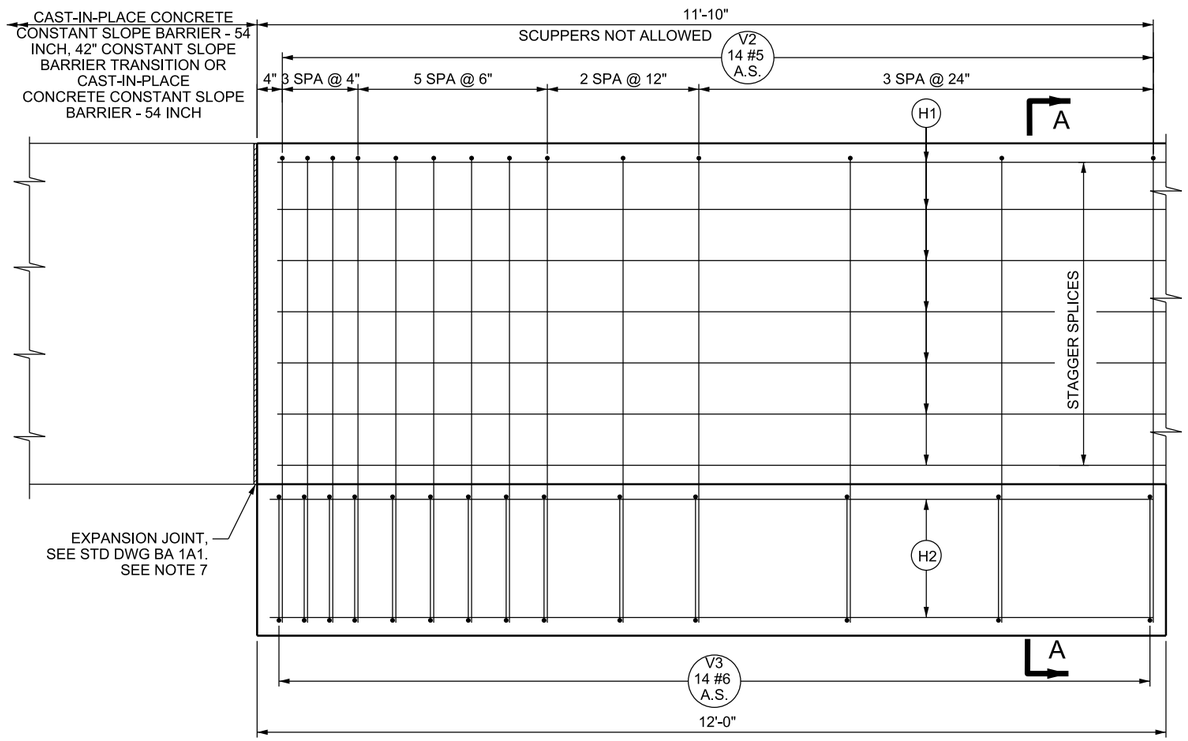

ELEVATION

BARRIER ON HMA SHOWN
SEE BA O1 FOR BARRIER ON PCCP

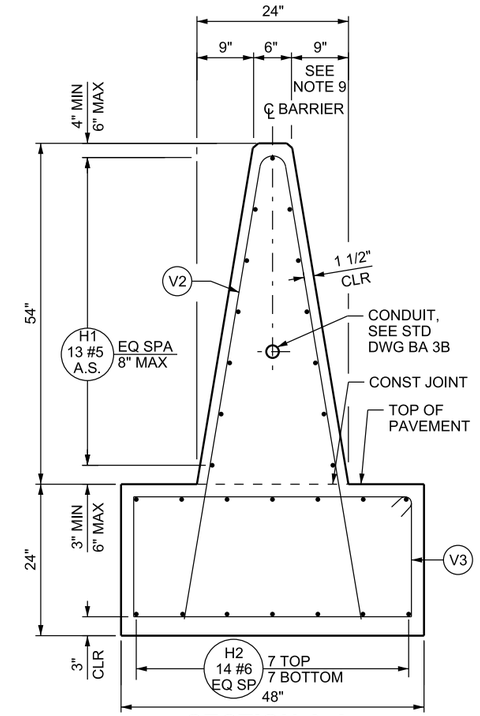

SECTION A-A

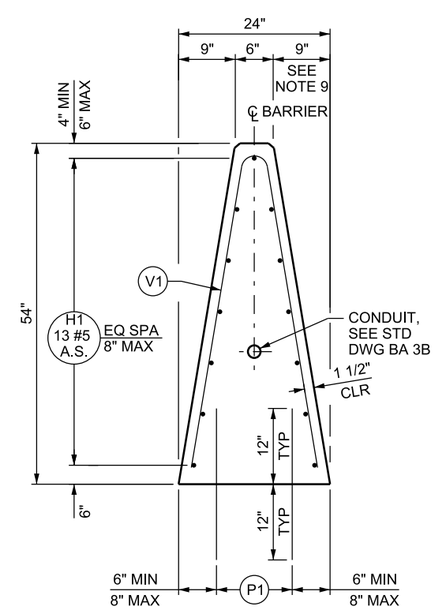

SECTION B-B

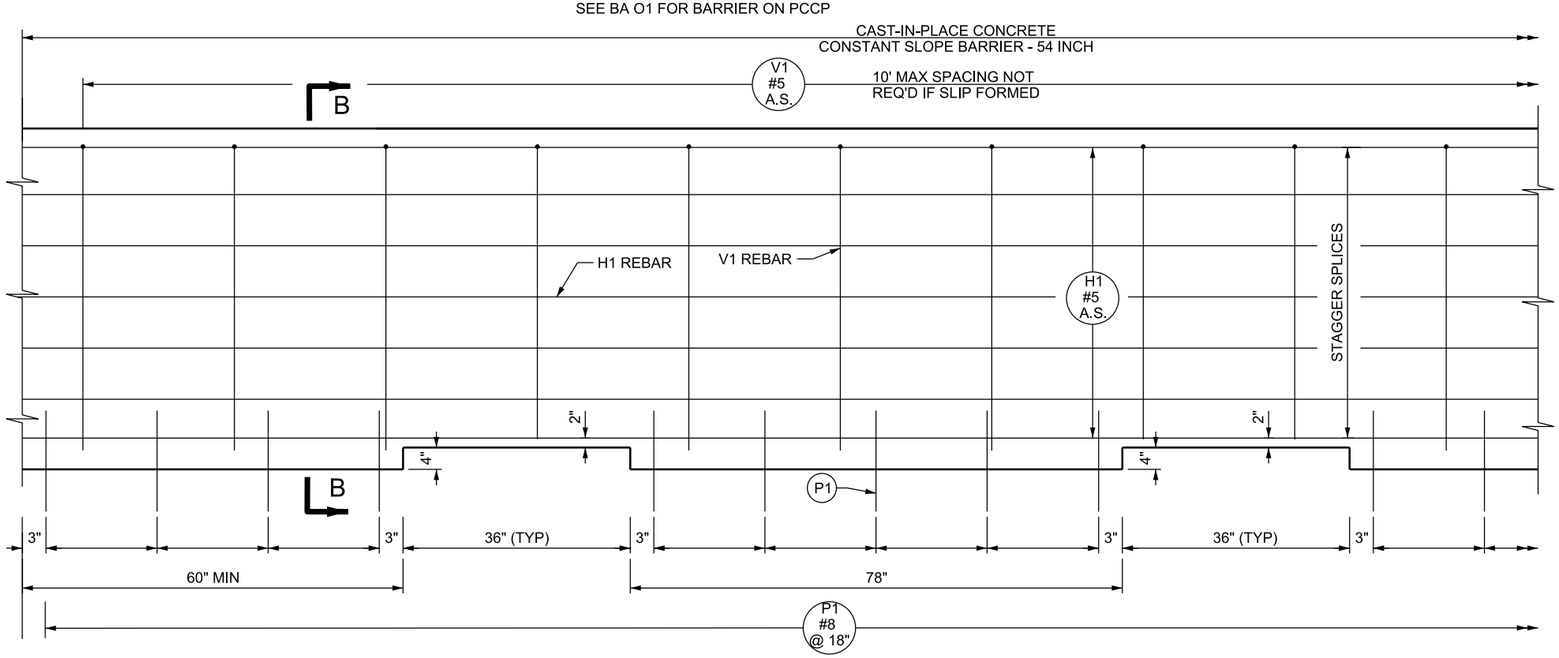

ELEVATION

DESIGN-ONLY NOTES:

A. SEE STD DWG BA 1B THROUGH BA 1D FOR TYPICAL LAYOUT REQUIREMENTS.

B. INDICATE ON PLAN SET WHEN BARRIER SECTIONS WITH SCUPPERS ARE REQUIRED.

NOTES:

1. SEE STD DWG BA 1A1 FOR GENERAL NOTES.
2. SEE "BARRIER CONNECTION DETAILS" ON STD DWG BA 1A2 FOR CONNECTION LOOP DETAILS.
3. DRILL AND EPOXY BOND P1 BARS OR HAND POSITION WHILE CONCRETE IS IN A WORKABLE FORM WHEN USING PCCP PAVEMENT.
4. THE ENGINEER APPROVES CONTRACTOR DEVISED METHOD OF POSITIONING THE LONGITUDINAL REINFORCING STEEL ±1/2 INCH AS DIMENSIONED.
5. SEE STD DWG BA 3O3 FOR REINFORCING SCHEDULE AND NOTES.
6. PROVIDE SCUPPERS AS SHOWN.
7. DO NOT USE BARRIER SEAL WHEN SCUPPERS ARE PRESENT ON BARRIER.
8. SEE STD DWG BA 3M2 FOR APPROACH AND TRAILING END TREATMENTS. NO EXPANSION JOINT REQUIRED.
9. THE 9 INCH DIMENSION MAY BE REDUCED TO 7 INCHES AS SHOWN TO PROVIDE A MINIMUM 2 INCH CLEARANCE TO THE COLUMN IN COLUMN PROTECTION APPLICATIONS. ADJUST REINFORCEMENT TO PROVIDE MINIMUM COVER.

REVISIONS

NO.	DATE	APPR.	REMARKS

UTAH DEPARTMENT OF TRANSPORTATION
STANDARD DRAWINGS FOR ROAD AND BRIDGE CONSTRUCTION
SALT LAKE CITY, UTAH

RECOMMENDED FOR APPROVAL — JAN.01.2017 DATE
CHAIRMAN STANDARDS COMMITTEE APPROVED — JAN.01.2017 DATE
DEPUTY DIRECTOR

CAST-IN-PLACE CONCRETE CONSTANT SLOPE BARRIER WITH SCUPPERS- 54 INCH, TL-5
STANDARD DRAWING TITLE

STD. DWG. NO.
BA 3O4

DGN File: L:\Standard Drawings\Imperial\2017 Approved\1-All Drawings\BA0304.dgn
28-NOV-2016

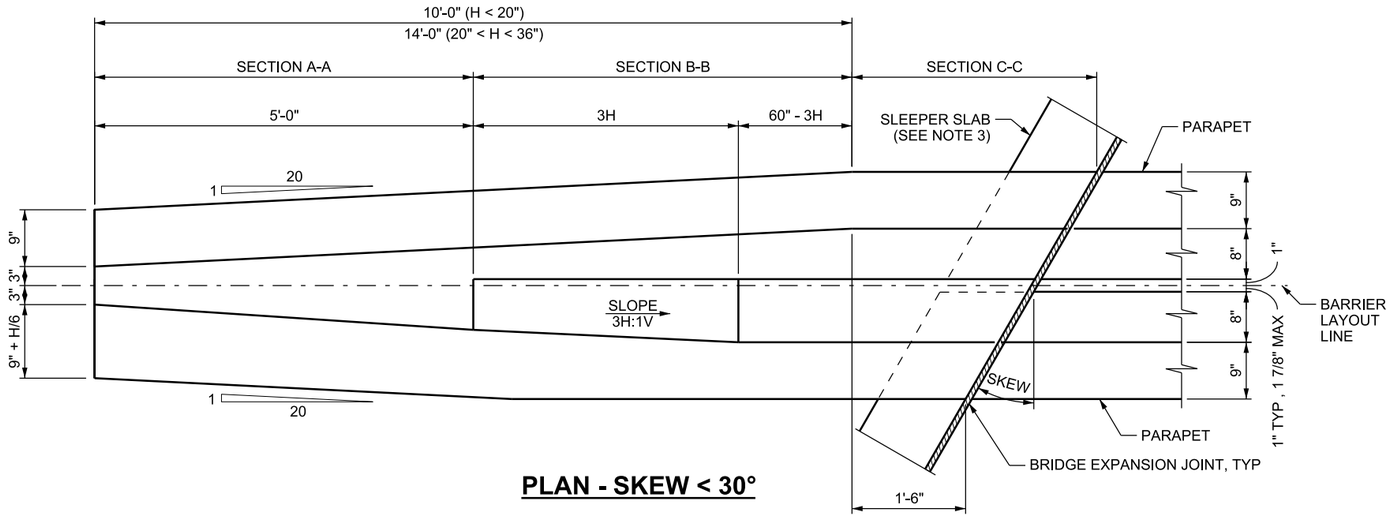

PLAN - SKEW < 30°

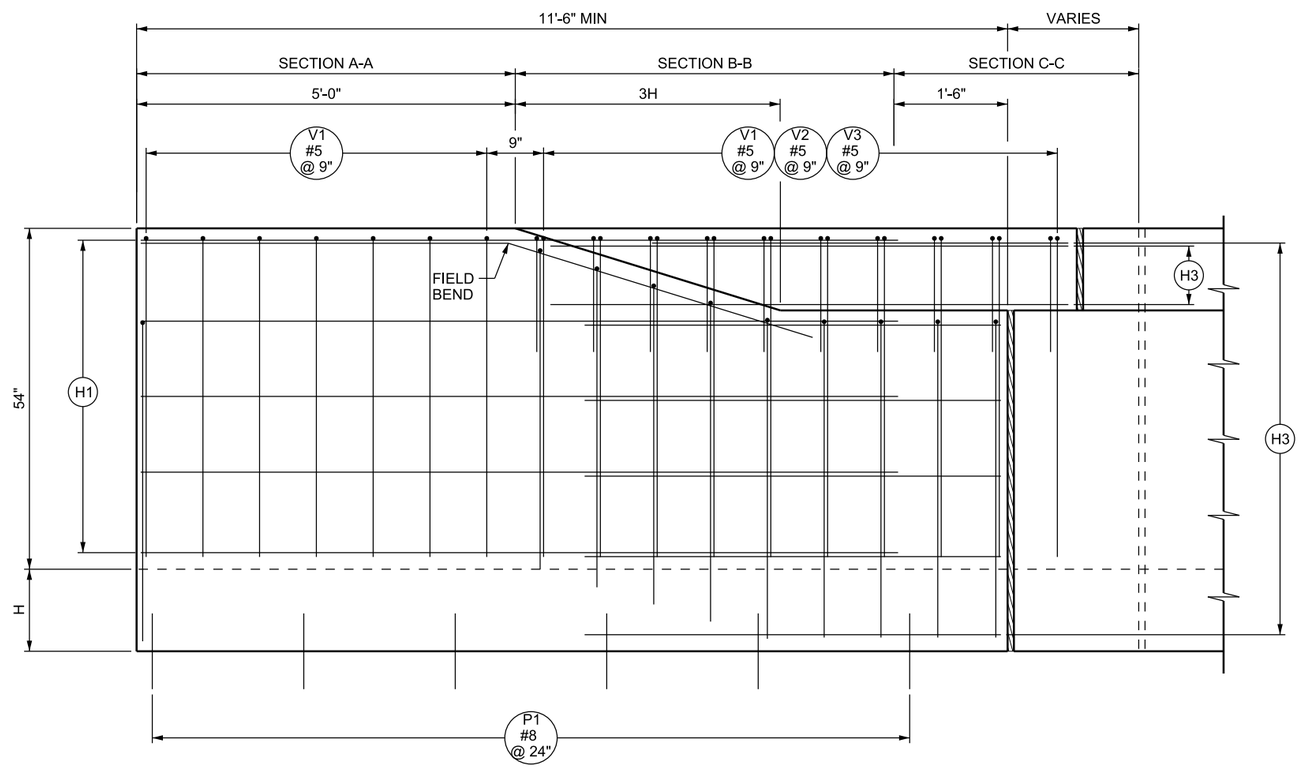

ELEVATION - SKEW < 30°

DESIGN-ONLY NOTES:

A. SEE STD DWG BA 1B THROUGH BA 1D FOR TYPICAL LAYOUT REQUIREMENTS.

NOTES:

1. SEE STD DWG BA 1A1 FOR GENERAL NOTES.
2. SEE STD DWG BA 3P3 FOR SECTIONS AND REINFORCING SCHEDULE.
3. SLEEPER SLAB ENDS AT FACE OF PARAPET FOR H GREATER THAN 14 INCHES.

REVISIONS

NO.	DATE	APPR.	REMARKS

UTAH DEPARTMENT OF TRANSPORTATION
STANDARD DRAWINGS FOR ROAD AND BRIDGE CONSTRUCTION
SALT LAKE CITY, UTAH

RECOMMENDED FOR APPROVAL — JAN.01, 2017 DATE
CHAIRMAN STANDARDS COMMITTEE APPROVED — JAN.01, 2017 DATE
DEPUTY DIRECTOR

CAST-IN-PLACE CONCRETE
CONSTANT SLOPE BARRIER
- 54 INCH, BRIDGE
PARAPET TRANSITION
1 OF 3

STANDARD DRAWING TITLE

STD. DWG. NO.
BA 3P1

DGN File: L:\Standard Drawings\Imperial\2017 Approved\1-All Drawings\BA03P1.dgn
28-NOV-2016

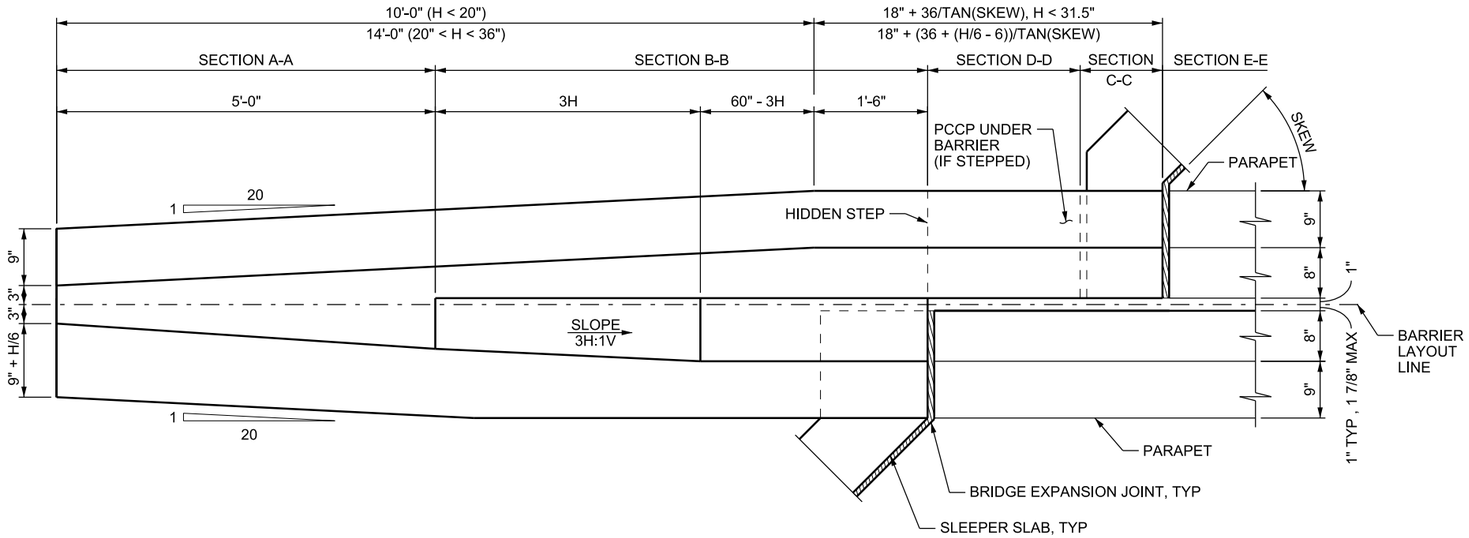

PLAN - H < 36 INCH, 30° < SKEW < 45°

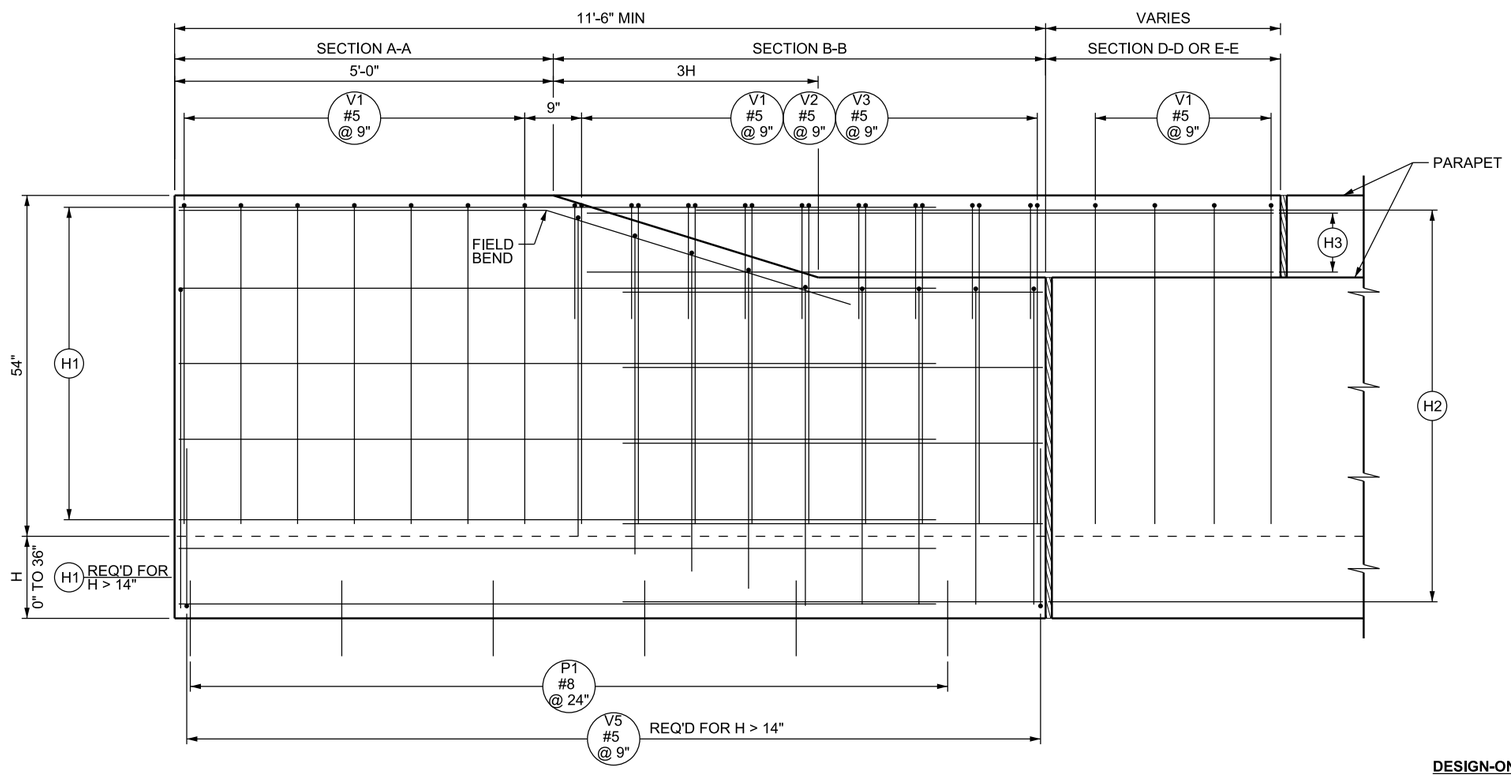

ELEVATION - H < 36 INCH, 30° < SKEW < 45°

DESIGN-ONLY NOTES:

A. SEE STD DWG BA 1B THROUGH BA 1D FOR TYPICAL LAYOUT REQUIREMENTS.

NOTES:

1. SEE STD DWG BA 1A1 FOR GENERAL NOTES.
2. SEE STD DWG BA 3P3 FOR SECTIONS AND REINFORCING SCHEDULE.

REVISIONS

NO.	DATE	APPR.	REMARKS

UTAH DEPARTMENT OF TRANSPORTATION
STANDARD DRAWINGS FOR ROAD AND BRIDGE CONSTRUCTION
SALT LAKE CITY, UTAH

RECOMMENDED FOR APPROVAL — JAN.01.2017 DATE
CHAIRMAN STANDARDS COMMITTEE APPROVED — JAN.01.2017 DATE
DEPUTY DIRECTOR — DATE

STANDARD DRAWING TITLE
CAST-IN-PLACE CONCRETE CONSTANT SLOPE BARRIER - 54 INCH, BRIDGE PARAPET TRANSITION 2 OF 3

STD. DWG. NO.
BA 3P2

DGN File: L:\Standard Drawings\Imperial\2017 Approved\1-All Drawings\BA03P2.dgn
28-NOV-2016

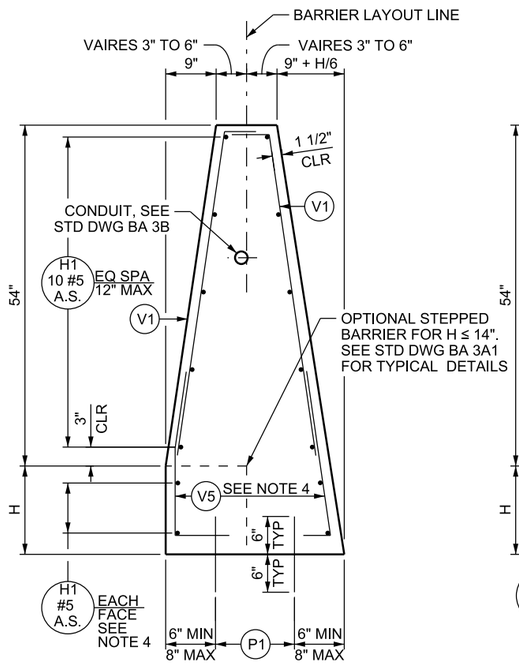

SECTION A-A

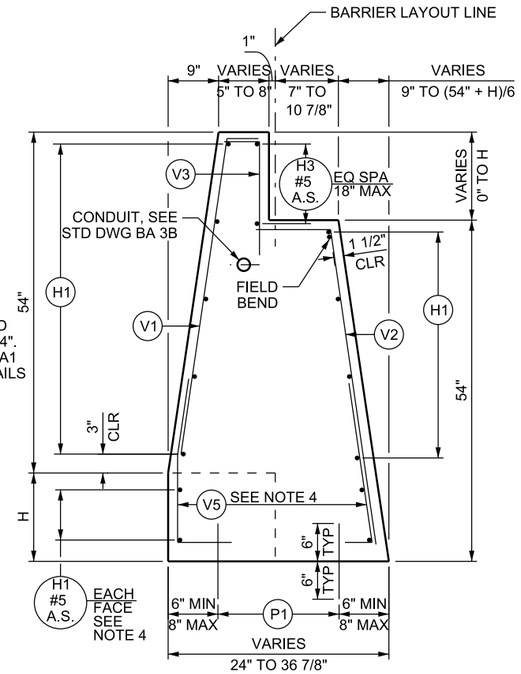

SECTION B-B

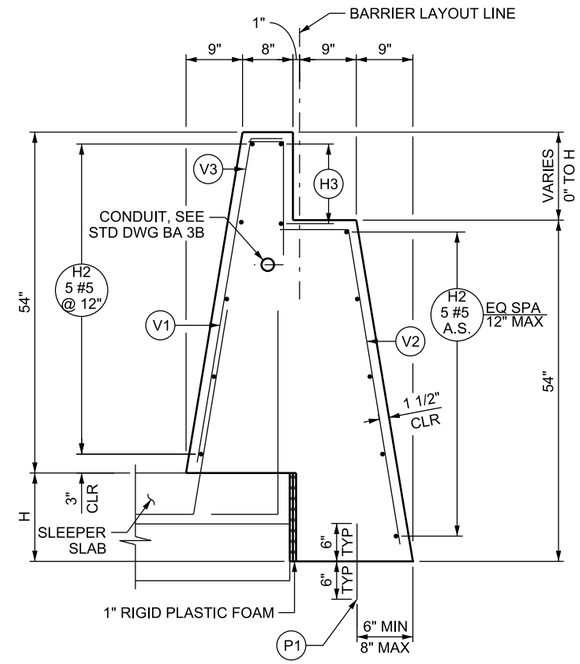

SECTION C-C

(H < 14", SKEW < 30°)

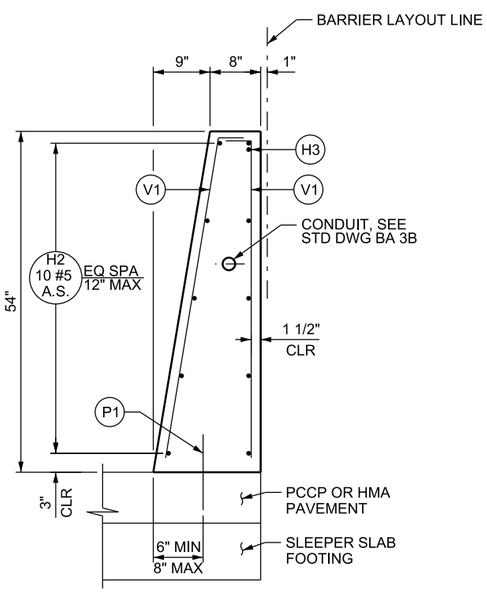

SECTION D-D

(ADJACENT APPROACH SLAB BARRIER NOT SHOWN)

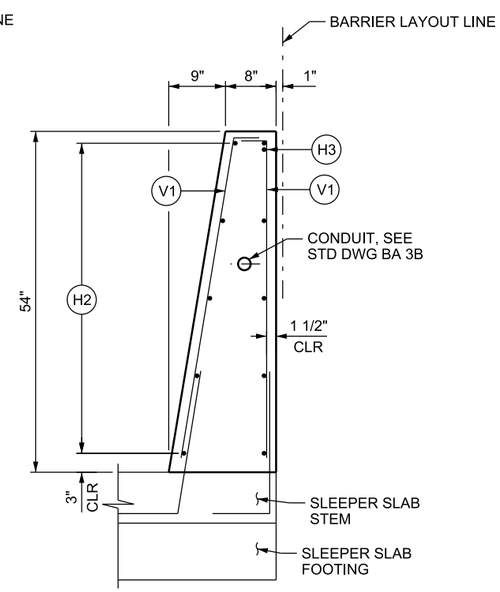

SECTION E-E

(ADJACENT APPROACH SLAB BARRIER NOT SHOWN)

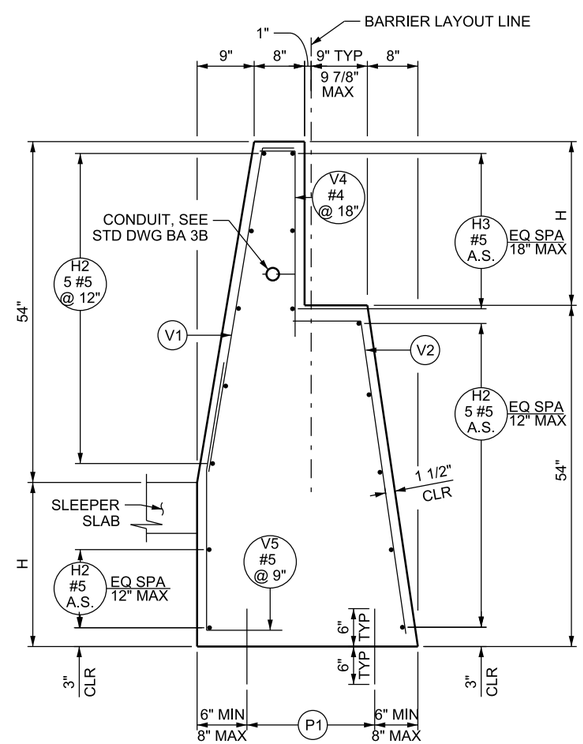

SECTION C-C

(H > 14 INCH, SKEW < 30°)

BAR MARK	BAR SIZE	LOCATION	SKETCH
P1	#8	PAVEMENT TO BARRIER (VERTICAL)	12" 3" 12" OPTION 1 OPTION 2
H1	#5	HORIZONTAL IN BARRIER	10'-0" FOR H < 20" 15'-6" FOR H < 36"
H2	#5	HORIZONTAL IN BARRIER	6'-0"
H3	#5	HORIZONTAL IN BARRIER (36" MIN LAP)	VARIES
V1	#5	VERTICAL IN BARRIER	5" 101° OR 90° ROTATED AS NEEDED TO MAINTAIN CLEAR 48"
V2	#5	VERTICAL IN BARRIER	12" 101° 48"
V3	#4	VERTICAL IN BARRIER	5" ROTATED AS NEEDED TO MAINTAIN CLEAR 18"
V4	#4	VERTICAL IN BARRIER	5" ROTATED AS NEEDED TO MAINTAIN CLEAR H
V5	#4	VERTICAL IN BARRIER	18" 170° OR 180° H - 3" 90° OR 79° 12"

NOTES:

1. SEE STD DWG BA 3P1 AND BA 3P2 FOR LOCATION OF SECTIONS.
2. DRILL AND EPOXY BOND P1 BARS OR HAND POSITION WHILE CONCRETE IS IN A WORKABLE FORM WHEN USING PCCP PAVEMENT.
3. H1 AND H2 BARS CAN BE OPTIMIZED OR COMBINED.
4. ADDITIONAL H1 BARS AND V5 BARS REQUIRED FOR H GREATER THAN 14 INCHES.

REVISIONS

NO.	DATE	APPR.	REMARKS

UTAH DEPARTMENT OF TRANSPORTATION
STANDARD DRAWINGS FOR ROAD AND BRIDGE CONSTRUCTION
SALT LAKE CITY, UTAH

RECOMMENDED FOR APPROVAL — JAN.01.2017 DATE
CHAIRMAN STANDARDS COMMITTEE APPROVED — JAN.01.2017 DATE
DEPUTY DIRECTOR

CAST-IN-PLACE CONCRETE CONSTANT SLOPE BARRIER - 54 INCH, BRIDGE PARAPET TRANSITION 3 OF 3

STANDARD DRAWING TITLE

STD. DWG. NO.
BA 3P3

DGN File:L:\Standard Drawings\Imperial\2017 Approved\1-All Drawings\BA03P3.dgn
28-NOV-2016

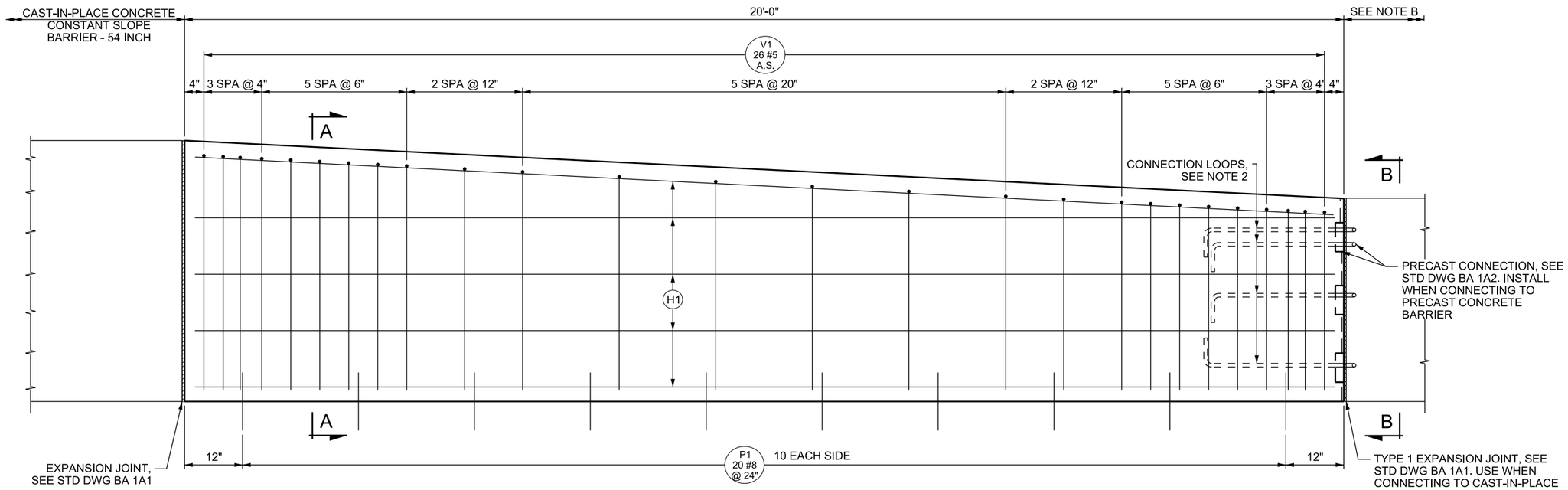

ELEVATION

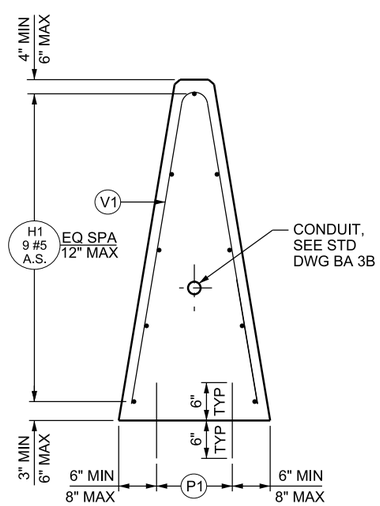

SECTION A-A

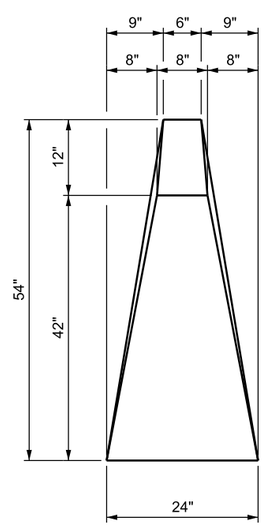

VIEW B-B

BAR MARK	BAR SIZE	NO BARS	LOCATION	SKETCH
P1	#8	20	PAVEMENT TO BARRIER (VERTICAL)	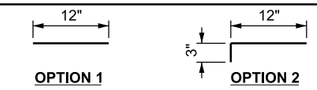
H1	#5	9	HORIZONTAL IN BARRIER TIED INSIDE V1 BARS	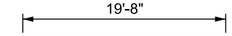
V1	#5	26	VERTICAL IN BARRIER	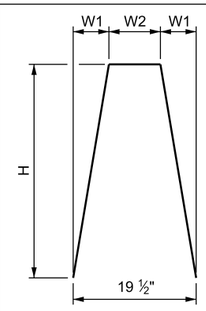

H	W1	W2	QTY
49 1/2"	8"	3 1/2"	1
49"	8"	3 1/2"	2
48 1/2"	8"	3 1/2"	2
48"	8"	3 1/2"	2
47 1/2"	8"	3 1/2"	1
47"	8"	3 1/2"	1
46 1/2"	8"	3 1/2"	1
46"	8"	3 1/2"	1
45"	7 1/2"	4 1/2"	1
44"	7 1/2"	4 1/2"	1
43"	7 1/2"	4 1/2"	1
42"	7 1/2"	4 1/2"	1
41"	7 1/2"	4 1/2"	1
40 1/2"	7 1/2"	4 1/2"	1
40"	7 1/2"	4 1/2"	1
39 1/2"	7 1/2"	4 1/2"	1
39"	7 1/2"	4 1/2"	1
39"	7 1/2"	5 1/2"	1
38 1/2"	7"	5 1/2"	2
38"	7"	5 1/2"	2
37 1/2"	7"	5 1/2"	1

DESIGN-ONLY NOTES:

A. SEE STD DWG BA 1B THROUGH BA 1D FOR TYPICAL LAYOUT REQUIREMENTS.
B. ADJACENT BARRIER OPTIONS ARE CAST-IN-PLACE CONCRETE CONSTANT SLOPE BARRIER - 42 INCH; PRECAST CONCRETE CONSTANT SLOPE BARRIER - 42 INCH; OR PRECAST CONCRETE BARRIER - 32 INCH NEW JERSEY SHAPE, 42 INCH CONSTANT SLOPE BARRIER TRANSITION.

NOTES:

1. SEE STD DWG BA 1A1 FOR GENERAL NOTES.
2. SEE "BARRIER CONNECTION DETAILS" ON STD DWG BA 1A2 FOR CONNECTION LOOP DETAILS. PLACE THE APPROPRIATE CONNECTION LOOP CONFIGURATION THAT CORRESPONDS WITH ADJACENT PRECAST BARRIER.
3. DRILL AND EPOXY BOND P1 BARS, OR HAND POSITION WHILE CONCRETE IS IN A WORKABLE FORM WHEN USING PCCP PAVEMENT.
4. BARRIER TRANSITIONS MAY BE LENGTHENED, WITH ENGINEER'S APPROVAL, TO ELIMINATE A GAP BETWEEN PRECAST AND CAST-IN-PLACE SECTIONS.

REVISIONS

NO.	DATE	APPR.	REMARKS

UTAH DEPARTMENT OF TRANSPORTATION
STANDARD DRAWINGS FOR ROAD AND BRIDGE CONSTRUCTION
SALT LAKE CITY, UTAH

RECOMMENDED FOR APPROVAL — JAN.01.2017 DATE
CHAIRMAN STANDARDS COMMITTEE APPROVED — JAN.01.2017 DATE
DEPUTY DIRECTOR

CAST-IN-PLACE CONCRETE CONSTANT SLOPE BARRIER - 54 INCH, 42 INCH CONSTANT SLOPE BARRIER TRANSITION
STANDARD DRAWING TITLE

STD. DWG. NO.
BA 3Q1

28-NOV-2016 DGN File:L:\Standard Drawings\Imperial\2017 Approved\1-All Drawings\BA0301.dgn

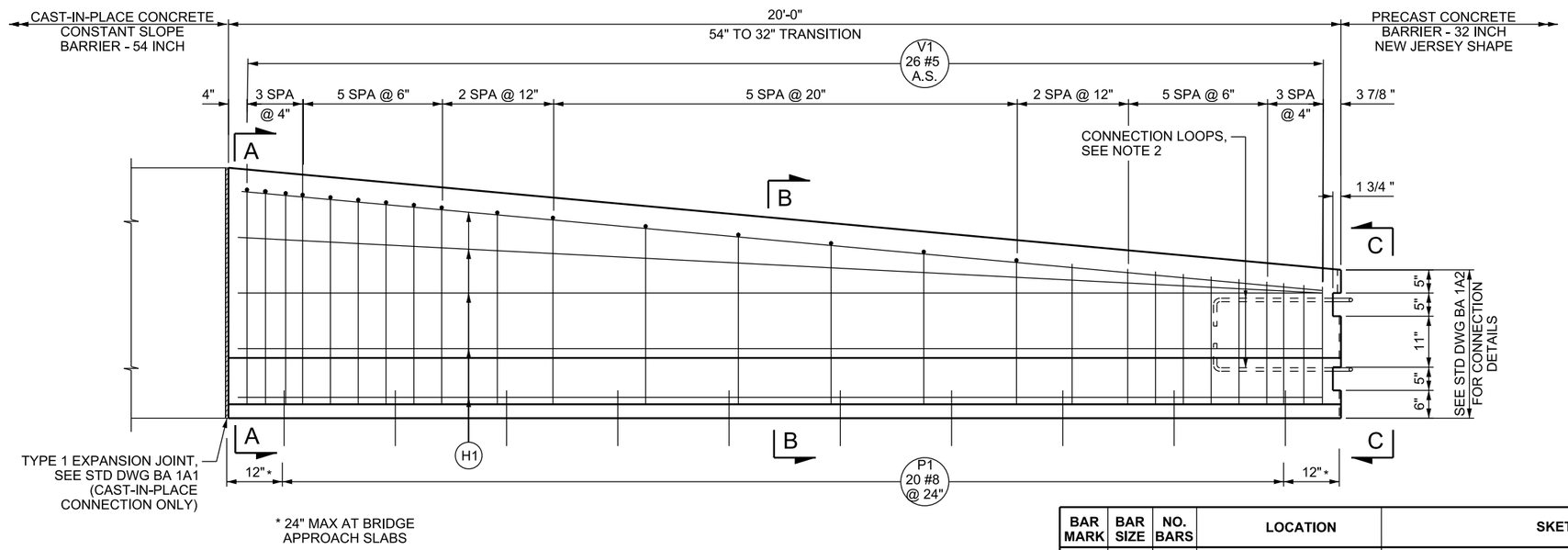

ELEVATION

BAR MARK	BAR SIZE	NO. BARS	LOCATION	SKETCH
H1	#5	9	HORIZONTAL IN BARRIER TIED INSIDE V1 BARS	19'-6"
P1	#8	20	PAVEMENT TO BARRIER THROUGH LIMITS OF BARRIER (VERTICAL)	12" OPTION 1; 12", 3" OPTION 2
V1	#5	26	VERTICAL IN BARRIER	H, W, QTY; 2" R
V2	#5	18	VERTICAL IN BARRIER TIE TO V1 BARS TOTAL LENGTH = 3'-7 1/2"	12", 55°, 55°, 12", 19½"

H	W	QTY
46 1/2"	19 1/2"	1
46"	19 1/2"	1
46"	19"	1
45 1/2"	19"	1
45"	19"	1
44 1/2"	18 1/2"	1
44"	18"	1
43 1/2"	18"	1
42 1/2"	17 1/2"	1
41 1/2"	17"	1
40 1/2"	16 1/2"	1
38 1/2"	15 1/2"	1
37"	15"	1
35"	14"	1
33"	13"	1
31 1/2"	12"	1
30"	11 1/2"	1
29"	11"	1
28 1/2"	11"	1
28"	10 1/2"	1
27 1/2"	10"	1
27"	10"	1
26 1/2"	9 1/2"	1
26"	9 1/2"	1
25 1/2"	9"	1
25"	9"	1

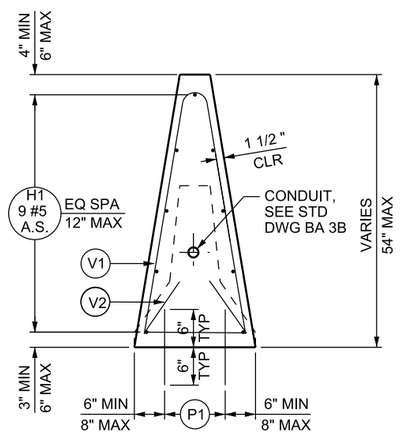

SECTION A-A

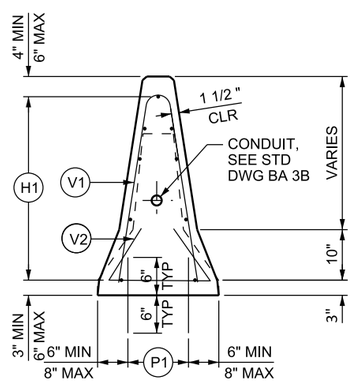

SECTION B-B

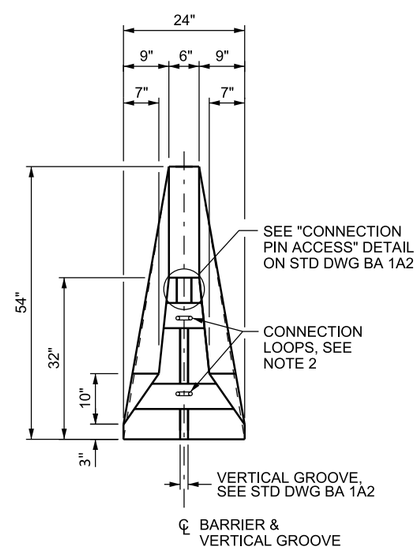

VIEW C-C

DESIGN-ONLY NOTES

A. SEE STD DWG BA 1B THROUGH BA 1D FOR TYPICAL LAYOUT REQUIREMENTS.

NOTES

1. SEE STD DWG BA 1A1 FOR GENERAL NOTES.
2. SEE "BARRIER CONNECTION DETAILS" ON STD DWG BA 1A2 FOR CONNECTION LOOP DETAILS. PLACE THE APPROPRIATE CONNECTION LOOP CONFIGURATION THAT CORRESPONDS WITH ADJACENT PRECAST BARRIER.
3. BARRIER SHAPE VARIES LINEARLY OVER LENGTH OF BARRIER TRANSITION.
4. BARRIER TRANSITIONS MAY BE LENGTHENED, WITH ENGINEER'S APPROVAL, TO ELIMINATE A GAP BETWEEN PRECAST AND CAST-IN-PLACE SECTIONS.
5. DRILL AND EPOXY BOND P1 BARS OR HAND POSITION WHILE CONCRETE IS IN A WORKABLE FORM WHEN USING PCCP PAVEMENT.
6. THE ENGINEER APPROVES CONTRACTOR DEVISED METHOD OF POSITIONING THE LONGITUDINAL REINFORCING STEEL ±1/2 INCH AS DIMENSIONED.

REVISIONS

NO.	DATE	APPR.	REMARKS

UTAH DEPARTMENT OF TRANSPORTATION
STANDARD DRAWINGS FOR ROAD AND BRIDGE CONSTRUCTION
SALT LAKE CITY, UTAH

RECOMMENDED FOR APPROVAL — JAN.01.2017 DATE
CHAIRMAN STANDARDS COMMITTEE APPROVED — JAN.01.2017 DATE
DEPUTY DIRECTOR

CAST-IN-PLACE CONCRETE CONSTANT SLOPE BARRIER - 54 INCH, 32 INCH NEW JERSEY SHAPE BARRIER TRANSITION

STANDARD DRAWING TITLE

STD. DWG. NO.
BA 3Q2

28-NOV-2016 DGN File:L:\Standard Drawings\Imperial\2017 Approved\1-All Drawings\BA03Q2.dgn

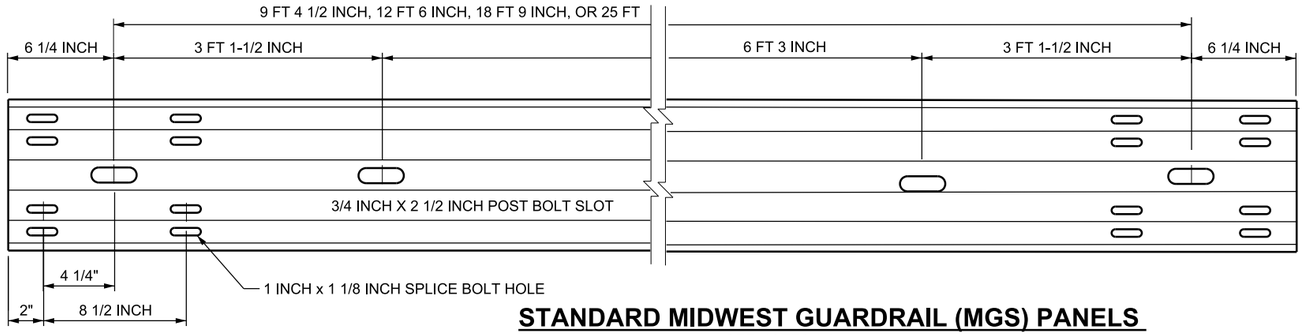

STANDARD MIDWEST GUARDRAIL (MGS) PANELS

SEE NOTES 6 & 7

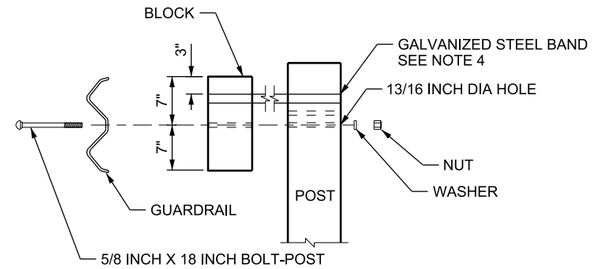

WOOD POST TO RAIL TYPICAL

USE BOTTOM HOLE FOR INITIAL INSTALLATION
SEE NOTES 1, 3 & 4

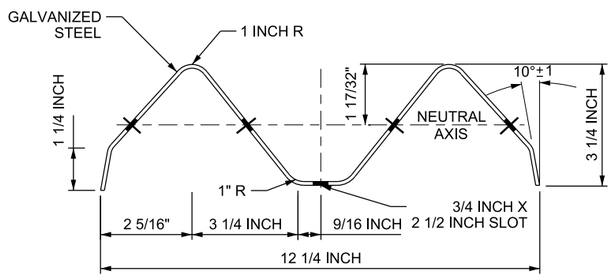

SECTION THRU RAIL ELEMENT

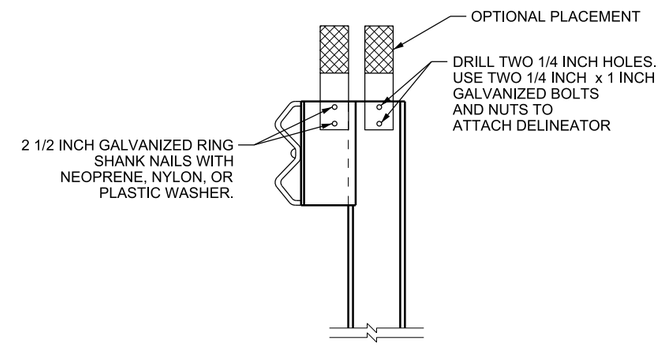

DELINEATOR DETAIL

STEEL POST W/WOOD
OR COMPOSITE BLOCK

SEE STD DWG GW 6B FOR HARDWARE
AND GW 7A FOR PLACEMENT

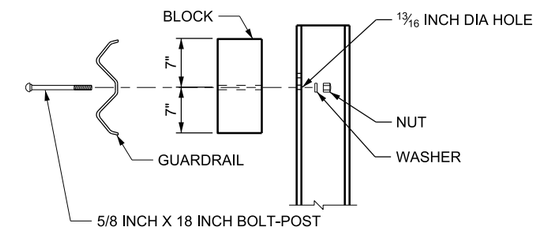

STEEL POST TO RAIL TYPICAL

SEE NOTES 1 & 3

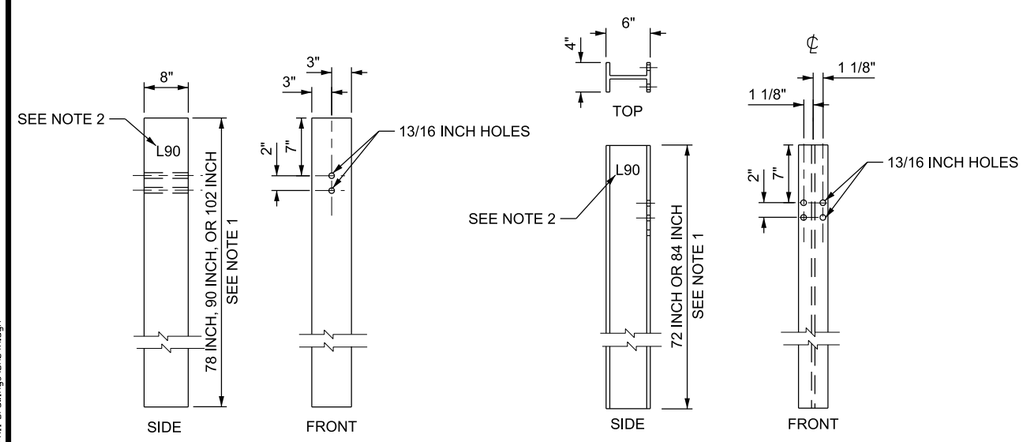

6 INCH X 8 INCH WOOD POST

W6 X 8.5 STEEL POST

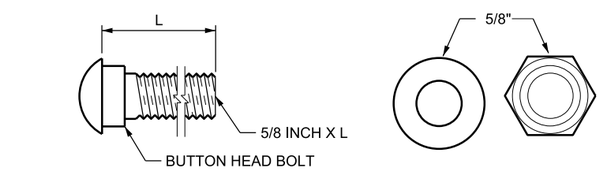

GALVANIZED BOLTS, NUTS, WASHERS

	L
SPLICE BOLTS (WASHER NOT REQ'D.)	1 1/4 INCH
STEEL BOLT W/ WOOD BLOCK	10 INCH
WOOD POST W/ WOOD BLOCK	18 INCH
WOOD POST W/ WOOD BLOCK (MEDIAN)	25 INCH

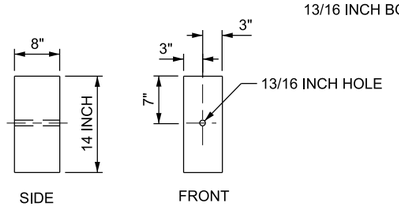

6 INCH X 8 INCH WOOD BLOCK

SEE NOTE 4

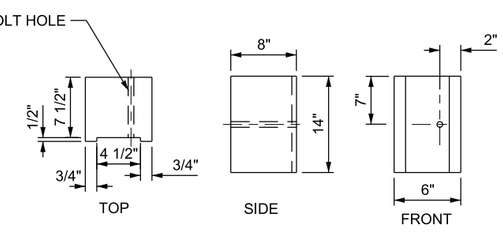

6 INCH X 8 INCH NOTCHED WOOD BLOCK

SEE NOTE 5

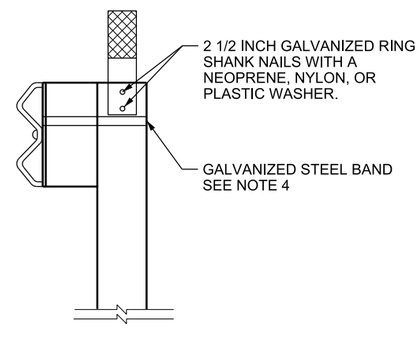

DELINEATOR DETAIL

WOOD POST W/WOOD BLOCK

SEE STD DWG GW 9 FOR HARDWARE
AND GW 10 FOR PLACEMENT

NOTES:

1. SEE INSTALLATION DETAIL STD DWG BA 4D1 OR BA 4D2 FOR POST LENGTH REQUIREMENTS AND HOLE USAGE REQUIREMENT.
2. 90 AND 102 INCH POST MARKING: WOOD POST, BRAND POST WITH 1 1/2 INCH x 2 INCH MARKING L90 OR L102, STEEL POST STAMP POST WITH 1 1/2 INCH x 2 INCH MARKING L90 OR L102. BRANDING OR STAMPING REQUIRED PRIOR TO INSTALLATION OF POSTS. DO NOT BRAND THE STANDARD LENGTH 78 INCH POST.
3. DO NOT USE WASHERS ON RAIL FACE OR SPLICE CONNECTION.
4. BAND WOOD BLOCKS TO WOOD POSTS WITH 1/2 INCH STEEL GALVANIZED OR STAINLESS STEEL BAND. BANDING NOT REQUIRED WITH STEEL POSTS AND WOOD OR COMPOSITE BLOCKS.
5. A COMPOSITE OR PLASTIC BLOCK CAN BE SUBSTITUTED FOR THE NOTCHED WOOD BLOCK ON STEEL POST INSTALLATION. MASH COMPLIANCE REQUIRED.
6. MANUFACTURE ACCORDING TO AASHTO GUIDE TO STANDARDIZED HIGHWAY BARRIER HARDWARE.
7. MEET STANDARD SPECIFICATION 02841 STEEL AND GALVANIZING REQUIREMENTS.

REVISIONS

NO.	DATE	APPR.	REMARKS

UTAH DEPARTMENT OF TRANSPORTATION
STANDARD DRAWINGS FOR ROAD AND BRIDGE CONSTRUCTION
SALT LAKE CITY, UTAH

RECOMMENDED FOR APPROVAL — JAN.01.2017 DATE
CHAIRMAN STANDARDS COMMITTEE APPROVED — JAN.01.2017 DATE
DEPUTY DIRECTOR

MIDWEST 31 INCH W-BEAM GUARDRAIL HARDWARE

STANDARD DRAWING TITLE

STD. DWG. NO.
BA 4A

DGN File:L:\Standard Drawings\Imperial\2017 Approved\1-All Drawings\BA04A.dgn
28-NOV-2016

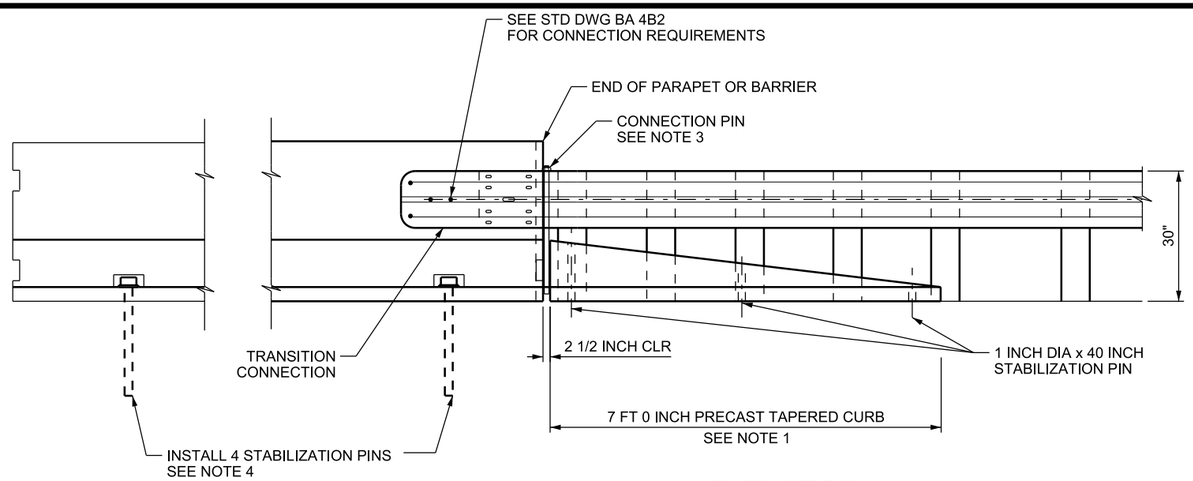

ELEVATION

RIGHT SIDE SHOWN LEFT SIDE SIMILAR

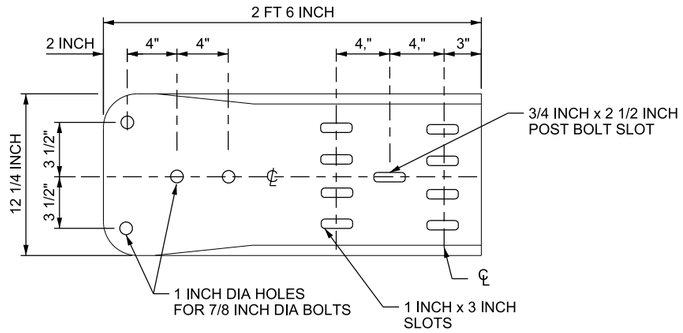

TERMINAL CONNECTOR PLATE

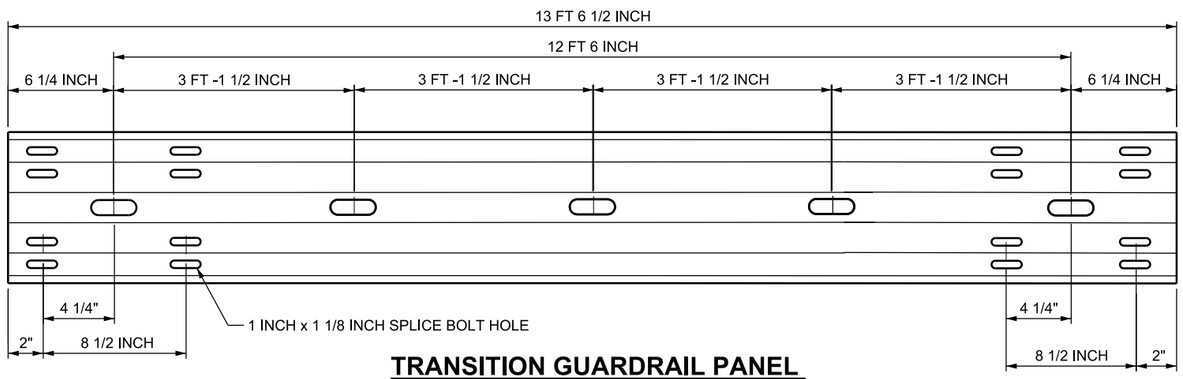

TRANSITION GUARDRAIL PANEL

4- SPACE W-BEAM GUARDRAIL
SEE NOTES 6 & 7

WOOD POST OPTION

POST # 1 & # 2
POSTS 10 INCH x 10 INCH x 8 FT
BLOCKS 10 INCH x 10 INCH x 14 INCH
POSTS # 3 THROUGH # 11
TYPICAL WOOD POSTS
AND BLOCKS
(SEE STD DWG BA 4A)

STEEL POST OPTION

POSTS # 1 & # 2
W8 x 21 x 8 FT
BLOCKS 6 INCH x 8 INCH x 14 INCH
POSTS # 3 THROUGH # 11
TYPICAL STEEL POSTS
AND BLOCKS
(SEE STD DWG BA 4A)

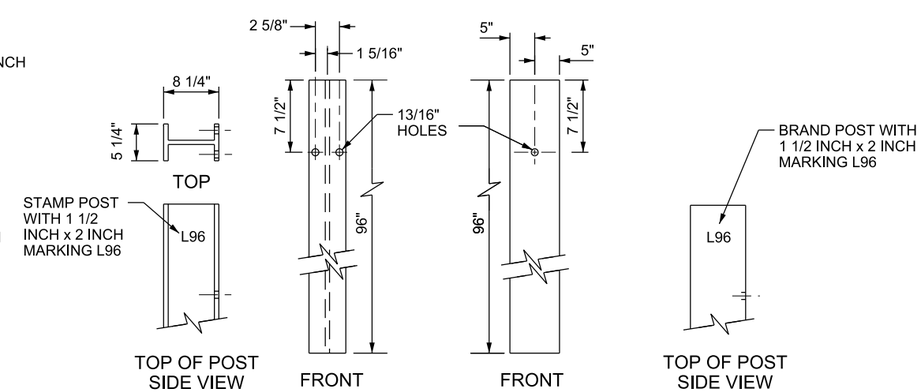

STEEL POST

WOOD POST

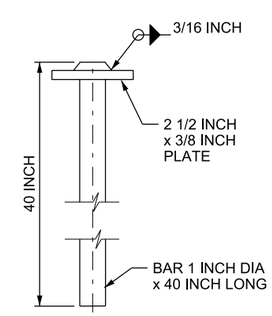

STABILIZATION PIN

SEE NOTE 5

POSTS # 1 AND # 2 OPTIONS

SEE NOTE 9

NOTES:

1. REFER TO STD DWG BA 4B2 FOR POST PLACEMENT AND CURB REQUIREMENTS.
2. COMPLETE SITE PREPARATION PRIOR TO INSTALLING TRANSITION.
3. INSTALL A CONNECTION PIN USING A CONNECTION PIN FROM STD DWG BA 1B.
4. INSTALL BARRIER STABILIZATION PINS PRIOR TO INSTALLING TERMINAL CONNECTION PLATE. PRE-DRILL 1 INCH DIA. HOLE THROUGH PAVED SURFACE PRIOR TO INSTALLING STABILIZATION PINS.
5. USE OF A HOT FORGED HEAD, MEETING PLATE SIZE AND THICKNESS IS ACCEPTABLE IN PLACE OF A WELDED PLATE.
6. MANUFACTURE ACCORDING TO AASHTO GUIDE TO STANDARDIZED HIGHWAY BARRIER HARDWARE COMPONENT. THE GUIDE REFERNCE NUMBER PLACED IN PARENTHESIS IS LOCATED AFTER THE COMPONENT TILE.
7. MEET STANDARD SPECIFICATION 02841 STEEL AND GALVANIZING REQUIREMENTS.
8. THREE W-BEAM RAIL ELEMENTS REQUIRED PER APPROACH TRANSITION.
9. 96 INCH POST MARKINGS: WOOD POST, BRAND POST WITH 1 1/2 INCH X 2 INCH MARKING L96. STEEL POSTS, STAMP POST WITH 1 1/2 INCH X 2 INCH MARKING L96, THE SINGLE NUMBER 8 A MINIMUM 3 INCHES HIGH MAY BE SUBSTITUTED FOR L96. BRANDING OR STAMPING REQUIRED PRIOR TO INSTALLATION.

NO.	DATE	APPR.	REMARKS

REVISIONS

UTAH DEPARTMENT OF TRANSPORTATION
STANDARD DRAWINGS FOR ROAD AND BRIDGE CONSTRUCTION
SALT LAKE CITY, UTAH

RECOMMENDED FOR APPROVAL — JAN. 01, 2017 DATE
CHAIRMAN STANDARDS COMMITTEE APPROVED — JAN. 01, 2017 DATE
DEPUTY DIRECTOR

W-BEAM GUARDRAIL TRANSITION HARDWARE

STANDARD DRAWING TITLE

STD. DWG. NO.
BA 4B1

DGN File: L:\Standard Drawings\Imperial\2017 Approved\1-All Drawings\BA04B1.dgn
28-NOV-2016

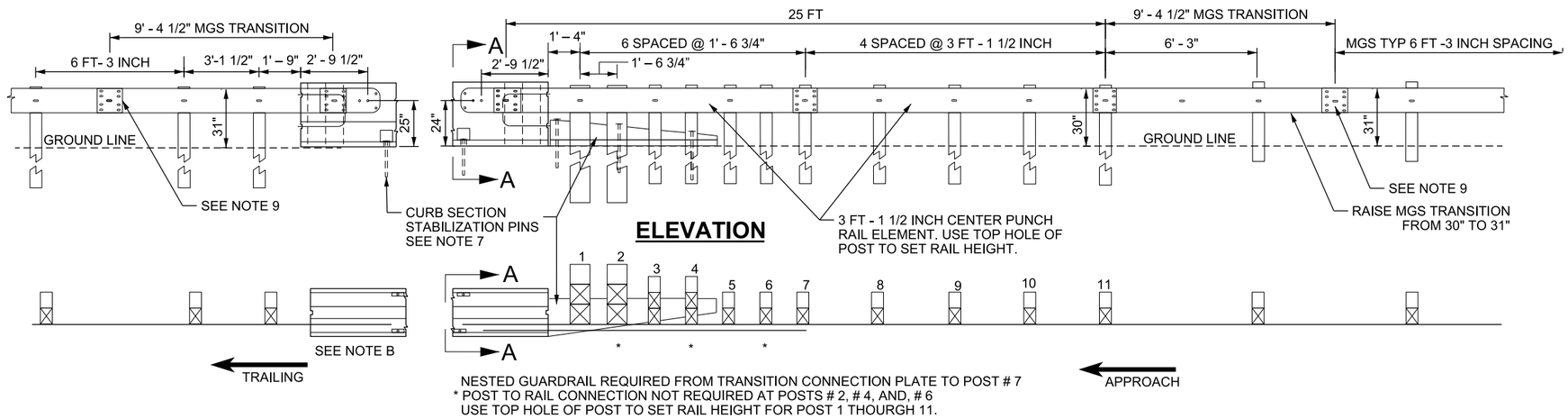

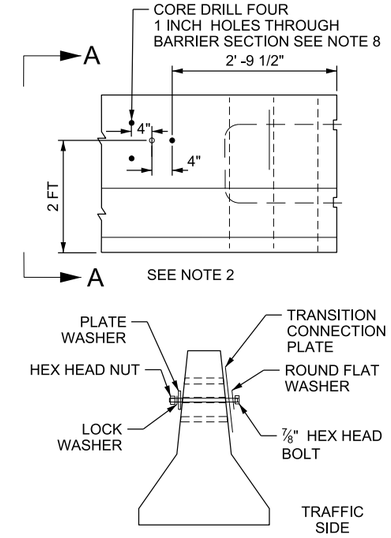

W-BEAM GUARDRAIL TRANSITION TO NEW JERSEY SHAPE BARRIER

RIGHT SIDE SHOWN LEFT SIDE SIMILAR

SEE NOTE 2

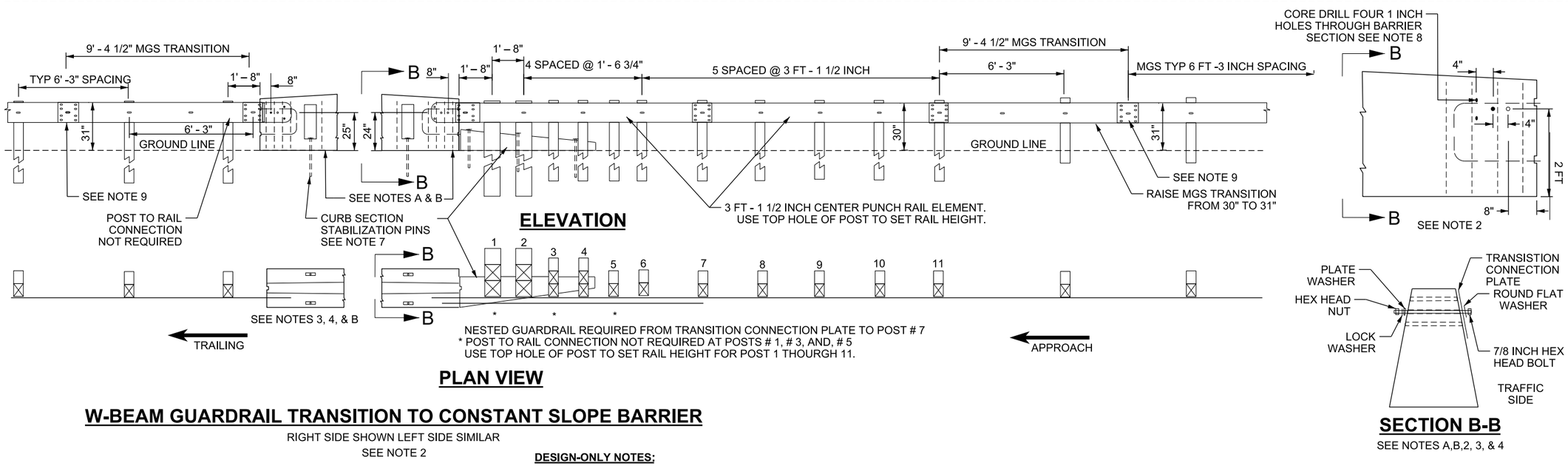

W-BEAM GUARDRAIL TRANSITION TO CONSTANT SLOPE BARRIER

RIGHT SIDE SHOWN LEFT SIDE SIMILAR

SEE NOTE 2

ATTACHMENT HARDWARE: USE WITH BOTH TYPES OF BARRIER:

- 4- 7/8 INCH DIA. (AASHTO M 164) HEX HEAD BOLTS, WITH 1 3/4 INCH ROUND FLAT WASHER UNDER EACH BOLT HEAD. BOLT LENGTH VARIES BASED ON BARRIER TYPE AND BOLT LOCATION.
- 4- 3 INCH x 3 INCH x 1/4 INCH INCH SQUARE PLATE WASHER WITH A CENTER HOLE 15/16 INCH DIA.
- 4- 7/8 INCH LOCK WASHER, PLACED ON TOP TO SQUARE WASHER
- 4- 7/8 INCH HEX NUTS (AASHTO M 291M)

ALL HARDWARE GALVANIZED

DESIGN-ONLY NOTES:

A. PRECAST CONSTANT SLOPE TRANSITION SECTION FOR CRASH CUSHIONS AND W-BEAM GUARDRAIL, STD DWG BA 3 SERIES IS REQUIRED OR WHEN INSTALLING ON CAST IN PLACE CONSTANT SLOPE BARRIER THE APPROACH AND TRAILING ENDS MUST BE DROPPED DOWN ACCORDING TO STD DWG BA 3 SERIES.

B. APPROACH TRANSITION ON THE TRAILING END OF A BARRIER OR BRIDGE PARAPET ON 2 LANE 2 WAY OR MULTI LANE NON DIVIDED ROADWAYS IS REQUIRED WHEN THE BARRIER END OR BRIDGE PARAPET END IS WITHIN THE MAXIMUM REQUIRED CLEAR ZONE OF OPPOSING TRAFFIC. CONNECTION ALLOWED ON NEW JERSEY SHAPE PARAPET, DO NOT CONNECT TO FULL HEIGHT CONSTANT SLOPE PARAPET.

NOTES:

1. SEE STD DWG BA 4B1 FOR TRANSITION COMPONENTS.
2. SEE PLAN SET FOR BARRIER TYPE.
3. DO NOT CONNECT AN APPROACH TRANSITION TO CONSTANT SLOPE BRIDGE PARAPET OR FULL HEIGHT CONSTANT SLOPE BARRIER.
4. INSTALL CONNECTION HARDWARE ACCORDING TO SECTION A-A OR B-B. USE BOLTS LONG ENOUGH THAT THE NUT WILL HAVE FULL ENGAGEMENT OF THE BOLT AND NO MORE THAN 1/4 INCH TO 1/2 INCH OF BOLT IS ABOVE THE NUT. CUT AND FIELD COAT BOLT WITH A ZINC COMPOUND WHEN BOLT EXCEEDS 1/2 INCH ABOVE THE NUT.
5. DO NOT USE ALL THREAD ROD.
6. COMPLETE SITE PREPARATIONS PRIOR TO INSTALLING TRANSITION.
7. INSTALL APPROPRIATE CURB SECTION FOR TYPE OF BARRIER BEING USED. SEE STD DWG BA 4B4 FOR CURB TYPE. INSTALL BARRIER CONNECTION PIN AND STABILIZATION PINS WHERE REQUIRED. REFER TO BA 1 OR BA 3B SERIES STD DWGS FOR STABILIZATION PIN REQUIREMENTS.
8. DO NOT USE ROTARY PERCUSSION DRILL. CORE DRILLING REQUIRED.
9. INSTALL SPLICE BOLTS ONLY WITHIN THE MGS TRANSITION AND MGS SYSTEM. DO NOT INSTALL CENTER BOLT.

NO.	DATE	APPR.	REMARKS

REVISIONS

UTAH DEPARTMENT OF TRANSPORTATION
STANDARD DRAWINGS FOR ROAD AND BRIDGE CONSTRUCTION
SALT LAKE CITY, UTAH

RECOMMENDED FOR APPROVAL — JAN.01, 2017 DATE
CHAIRMAN STANDARDS COMMITTEE APPROVED — JAN.01, 2017 DATE
DEPUTY DIRECTOR

W-BEAM GUARDRAIL TRANSITION LAYOUTS APPROACH END AND MIDWEST 31 INCH GUARDRAIL TRAILING END

STANDARD DRAWING TITLE

STD. DWG. NO.

BA 4B2

DGN File:L:\Standard_Drawings\Imperial\2017 Approved\1-All Drawings\BA4B2.dgn
28-NOV-2016

CONSTANT SLOPE REINFORCING STEEL SCHEDULE

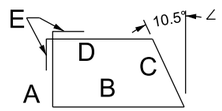

TYPE I
(FOR 1 SECTION ONLY)

BENT BARS (ALL DIMENSIONS ARE OUT TO OUT)

MARK	SIZE	NO.	TYPE	LENGTH	A	B	C	D	E
C1	#3	1	1	4 FT -2 1/2 INCH	8 1/2 INCH	14 1/2 INCH	8 1/2 INCH	12 INCH	3 1/2 INCH
C2				3 FT -10 INCH	7 1/2 INCH	13 INCH	7 1/2 INCH	11 INCH	
C3				3 FT -6 INCH	6 1/2 INCH	12 INCH	6 1/2 INCH	10 INCH	
C4				3 FT -1 1/2 INCH	5 1/2 INCH	10 1/2 INCH	5 1/2 INCH	9 INCH	
C5				2 FT -9 INCH	4 1/2 INCH	9 INCH	4 1/2 INCH	8 INCH	
C6	#3			2 FT -4 1/2 INCH	3 1/2 INCH	8 INCH	3 1/2 INCH	6 1/2 INCH	
C7		1	1	2 FT -1 INCH	3 INCH	6 1/2 INCH	3 INCH	5 1/2 INCH	3 1/2 INCH

NOTE:
ALL REINFORCING BARS TO HAVE
1 1/2 INCH MINIMUM COVER.

STRAIGHT BARS

MARK	SIZE	NO.	LENGTH	
B1	#4	4	6 FT -8 INCH	
B2	#4	2	8 INCH	

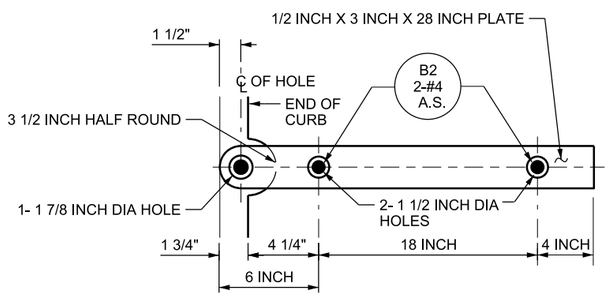

CONNECTION BAR

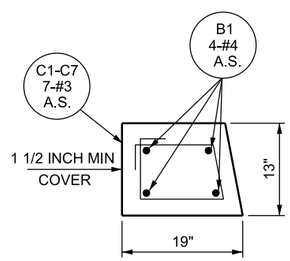

SECTION A-A

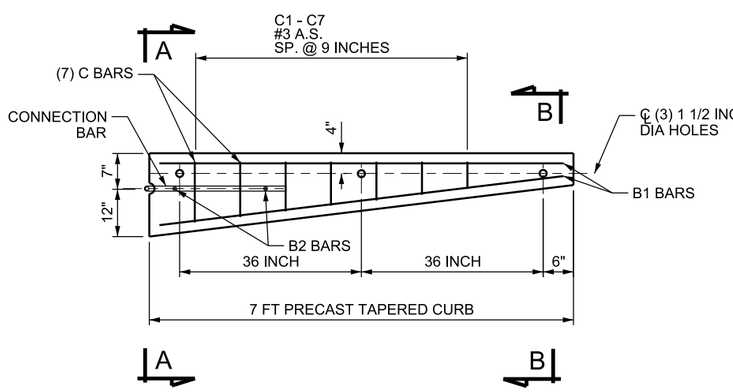

PLAN
CONSTANT SLOPE CURB SECTION

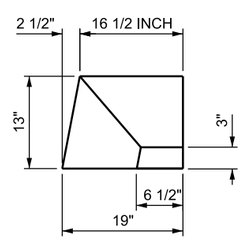

SECTION B-B

NEW JERSEY REINFORCING STEEL SCHEDULE

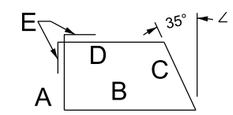

TYPE I
(FOR 1 SECTION ONLY)

BENT BARS (ALL DIMENSIONS ARE OUT TO OUT)

MARK	SIZE	NO.	TYPE	LENGTH	A	B	C	D	E
C1	#3	1	1	4 FT -2 1/2 INCH	9 INCH	14 1/2 INCH	11 INCH	9 INCH	3 1/2 INCH
C2				3 FT -10 1/2 INCH	8 INCH	13 1/2 INCH	10 INCH	8 INCH	
C3				3 FT -6 1/2 INCH	7 INCH	12 1/2 INCH	9 INCH	8 INCH	
C4				3 FT -2 INCH	6 INCH	11 INCH	8 INCH	7 INCH	
C5				2 FT -10 INCH	5 1/2 INCH	10 INCH	6 1/2 INCH	6 INCH	
C6				2 FT -6 INCH	4 1/2 INCH	8 1/2 INCH	5 1/2 INCH	5 INCH	
C7	#3	1	1	2 FT -2 1/2 INCH	4 1/2 INCH	8 INCH	5 INCH	5 INCH	3 1/2 INCH

NOTE:
ALL REINFORCING BARS TO HAVE
1 1/2 INCH MINIMUM COVER.

STRAIGHT BARS

MARK	SIZE	NO.	LENGTH	
B1	#4	4	6 FT 9 INCH	
B2	#4	2	8 INCH	

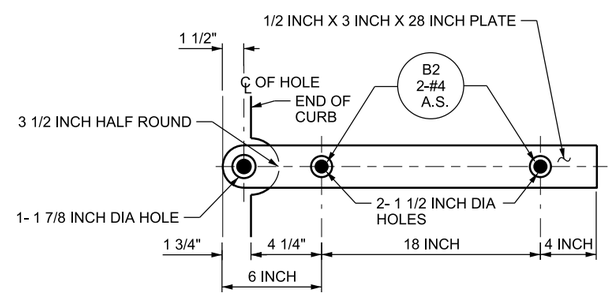

CONNECTION BAR

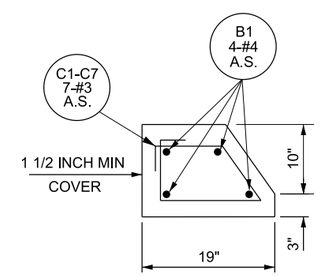

SECTION A-A

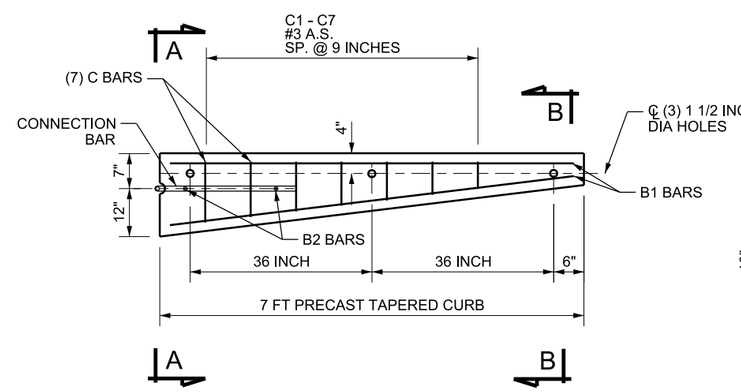

PLAN
NEW JERSEY SHAPED CURB SECTION

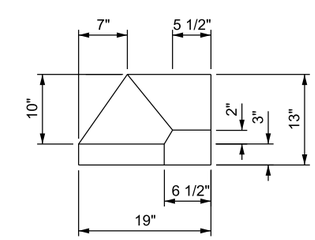

SECTION B-B

REVISIONS

NO.	DATE	APPR.	REMARKS

UTAH DEPARTMENT OF TRANSPORTATION
STANDARD DRAWINGS FOR ROAD AND BRIDGE CONSTRUCTION
SALT LAKE CITY, UTAH

RECOMMENDED FOR APPROVAL — JAN.01.2017 DATE
CHAIRMAN STANDARDS COMMITTEE APPROVED — JAN.01.2017 DATE
DEPUTY DIRECTOR

W-BEAM GUARDRAIL TRANSITION CURB SECTIONS
STANDARD DRAWING TITLE

STD. DWG. NO.
BA 4B3

DGN File:L:\Standard Drawings\Imperial\2017 Approved\All Drawings\BA4B4B3.dgn
28-NOV-2016

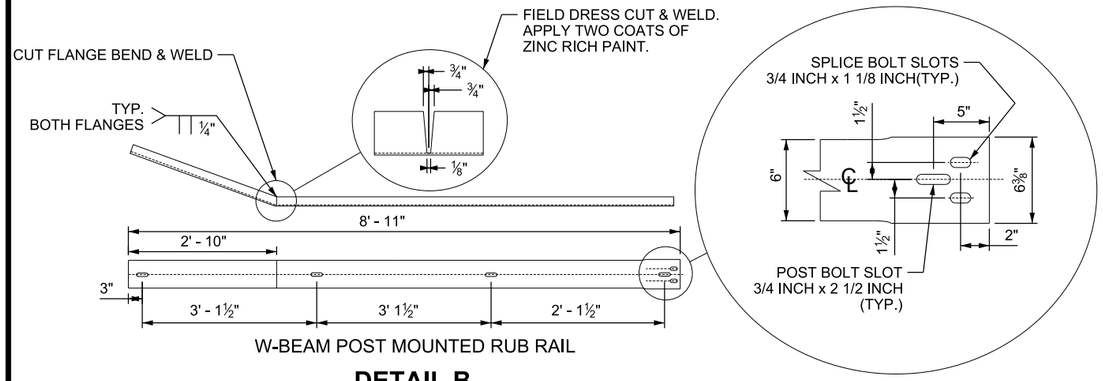

W-BEAM POST MOUNTED RUB RAIL

DETAIL B

SEE NOTE 2

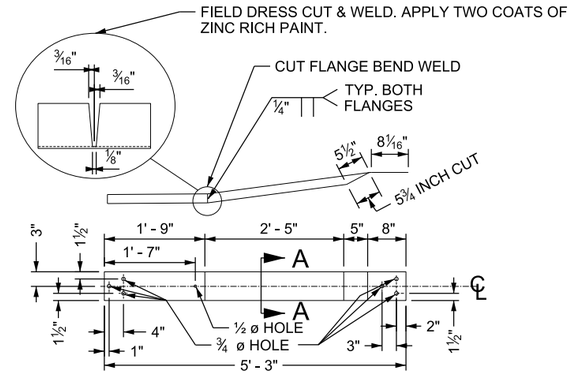

CONCRETE BARRIER MOUNTED RUB RAIL

DETAIL A

SEE NOTE 2

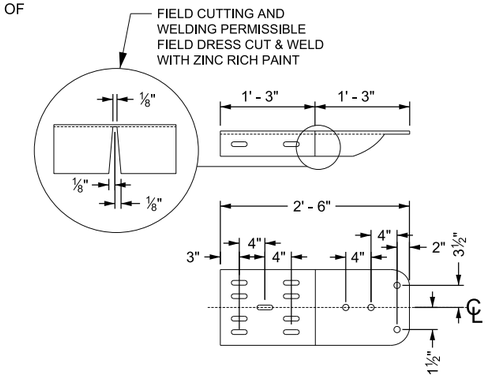

TERMINAL CONNECTION PLATE (RWE02A MODIFIED)

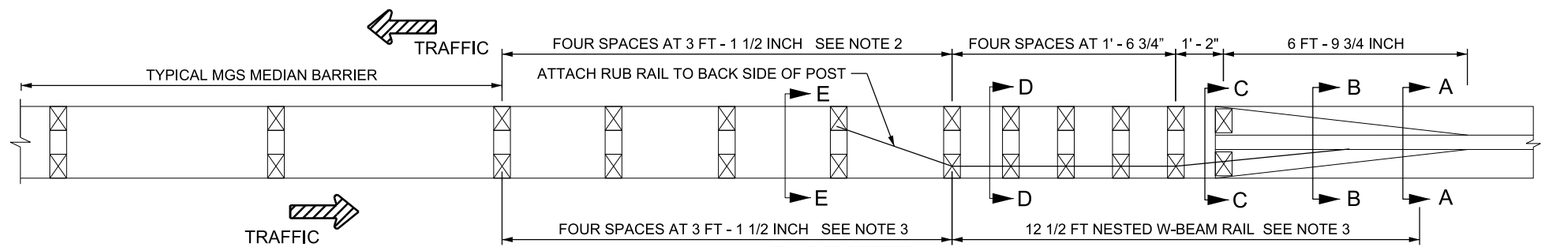

PLAN VIEW

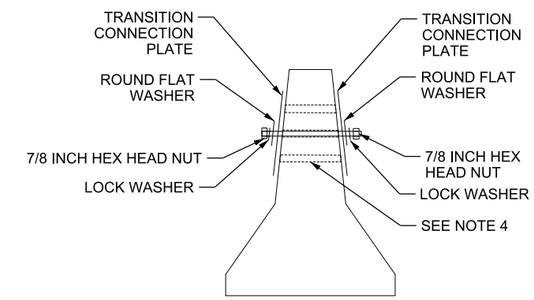

SECTION A-A

SEE NOTES 4 & 9

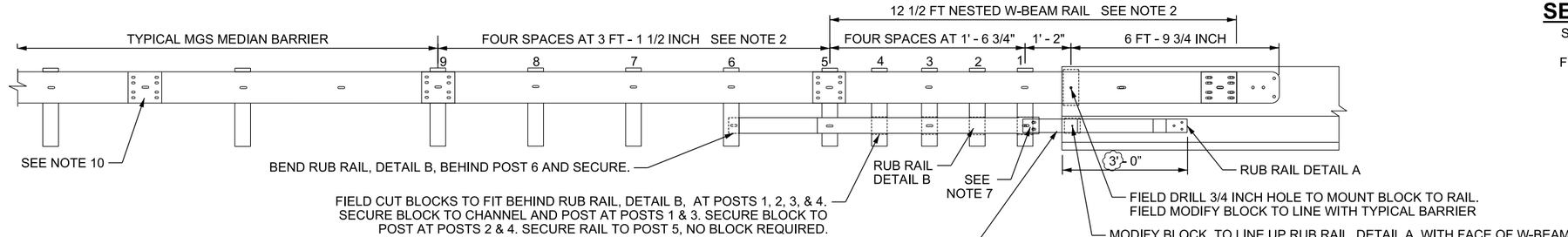

ELEVATION

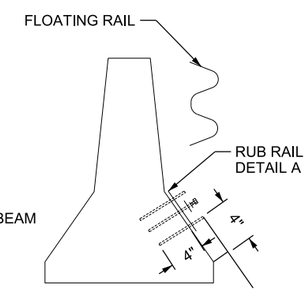

SECTION B-B

SEE NOTES 1, 2, 5, &, 9

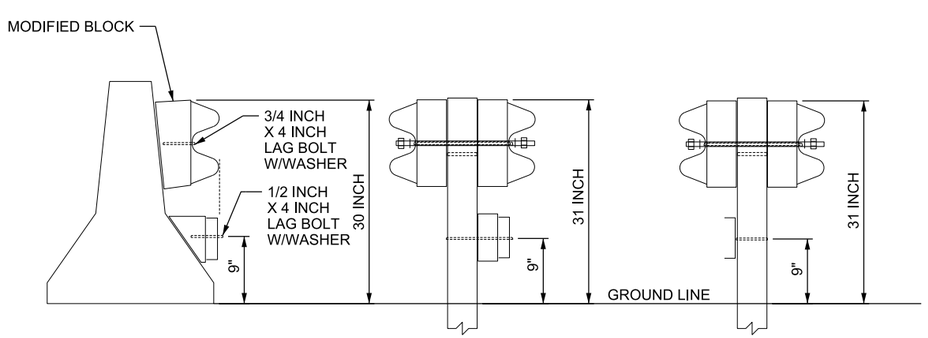

SECTION C-C

SEE NOTES 1 & 2

SECTION D-D

SEE NOTES 6,7, 9, & 11

SECTION E-E

SEE NOTES 7, 8, 9, & 11

NOTES:

1. NEW JERSEY STYLE BARRIER SHOWN. ATTACH TO CONSTANT SLOPE BARRIER IN SIMILAR MANNER. USE CONSTANT SLOPE TRANSITION SECTION, FROM 42 INCHES TO 32 INCHES ACCORDING TO BARRIER TYPE PRIOR TO ATTACHING TRANSITION SECTION.
2. USE C6X 8.2 CHANNEL RUB RAIL FOR THE MANUFACTURING OF DETAIL A AND DETAIL B. TWIST DETAIL A TO A 35 DEGREE RIGHT HAND TWIST. GALVANIZE TO MEET AASHTO M 111 AFTER PUNCHING, CUTTING AND TWISTING ARE COMPLETE.
3. USE TRANSITION GUARDRAIL PANELS ACCORDING TO STD DWG BA 4B1.
4. CORE DRILL BARRIER WITH 1 INCH HOLES, DO NOT USE ROTARY PERCUSSION DRILL. INSTALL TRANSITION CONNECTION PLATE USING 7/8 INCH HIGH STRENGTH TREADED RODS WITH ROUND WASHERS, LOCK WASHERS, AND NUTS ON BOTH SIDES OF THE BARRIER SO THAT NUTS WILL HAVE FULL ENGAGEMENT OF ROD AND WILL NOT BE GREATER THAN 1/2 INCH ABOVE NUT.
5. DRILL BARRIER WITH 3 HOLES, EACH MEASURING 3/4 INCH X 4 INCH. INSTALL THREE 5/8 INCH X 5 1/2 INCH HIGH STRENGTH TREADED RODS USING AASHTO M 235 EPOXY. INSTALL ROUND WASHERS, LOCK WASHERS, AND NUTS SO THAT NUTS WILL HAVE FULL ENGAGEMENT OF ROD AND WILL NOT BE GREATER THAN 1/2 INCH BEYOND NUT.
6. USE 5/8 INCH THREAD ROD WITH WASHERS AND NUTS TO ATTACH W-BEAM GUARDRAIL TO POSTS. USE CENTER HOLE OF POST FOR ATTACHMENT SO THAT NUTS WILL HAVE FULL ENGAGEMENT OF ROD AND WILL NOT BE GREATER THAN 1/2 INCH ABOVE NUT.
7. USE TYPICAL GUARDRAIL SPLICE BOLTS TO CONNECT RUB RAIL DETAIL A AND RUB RAIL DETAIL B TOGETHER. USE TYPICAL GUARDRAIL BUTTON HEAD BOLTS TO ATTACH RUB RAIL TO BLOCKS AND POSTS.
8. ATTACH RUB RAIL TO BACK OF POST # 6.
9. USE GALVANIZED OR ZINC COATED HARDWARE TO MOUNT TRANSITION CONNECTION PLATE, RUB RAIL, DETAIL A, ONTO CONCRETE BARRIER, W-BEAM CONNECTION RODS, AND LAG BOLTS.
10. INSTALL SPLICE BOLTS ONLY WITHIN THE MGS SYSTEM. DO NOT INSTALL CENTER BOLT.
11. USE TOP HOLE OF POST TO SET RAIL HEIGHT THROUGH SECTIONS D AND E.

NO.	DATE	APPR.	REMARKS

REVISIONS

UTAH DEPARTMENT OF TRANSPORTATION
STANDARD DRAWINGS FOR ROAD AND BRIDGE CONSTRUCTION
SALT LAKE CITY, UTAH

RECOMMENDED FOR APPROVAL — JAN.01, 2017 DATE
CHAIRMAN STANDARDS COMMITTEE APPROVED — JAN.01, 2017 DATE
DEPUTY DIRECTOR

MIDWEST 31 INCH W-BEAM GUARDRAIL MEDIAN BARRIER AND TRANSITION HARDWARE AND LAYOUT

STANDARD DRAWING TITLE

STD. DWG. NO.
BA 4B4

DGN File: L:\Standard Drawings\Imperial\2017 Approved\1-All Drawings\BA04B4.dgn
28-NOV-2016

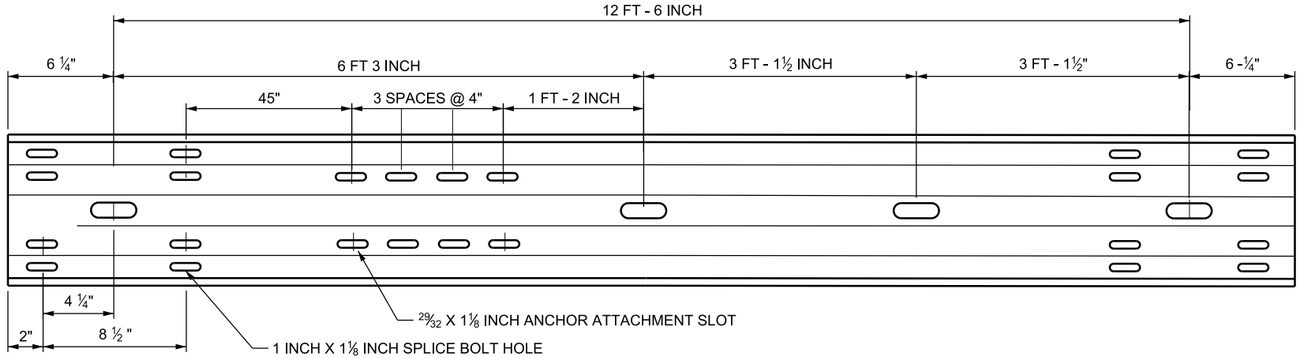

RAIL ELEMENT

SEE NOTE 1

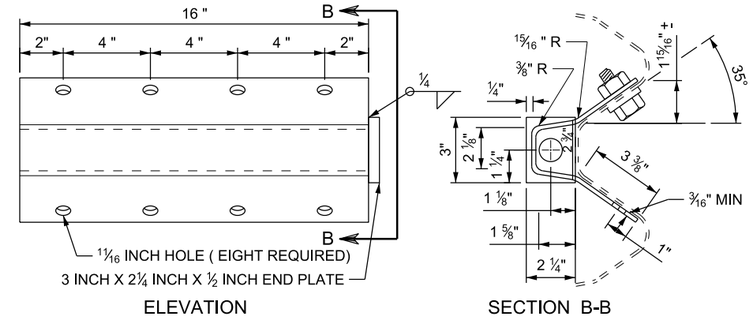

ANCHOR BRACKET

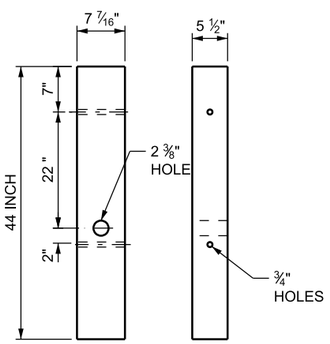

WOOD BREAKAWAY POST

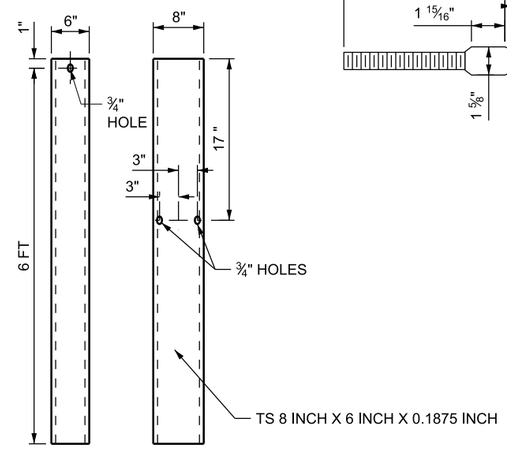

FOUNDATION TUBE

SEE NOTE 1

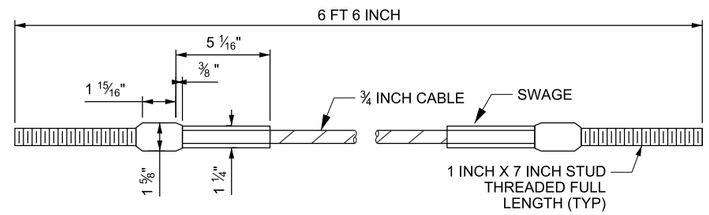

CABLE ANCHOR ASSEMBLY

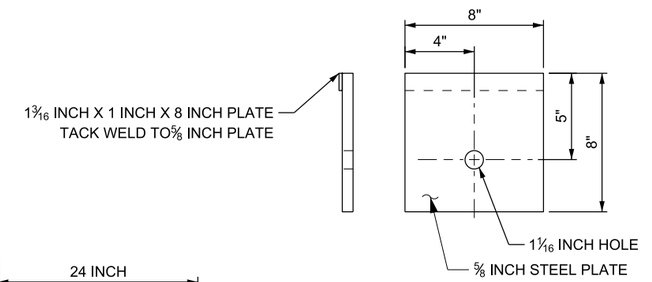

NOTE:
INSTALL BEARING PLATE WITH 5 INCH PORTION UP. SECURE PLATE TO POST USING TWO NAILS AT TOP OF PLATE.

BEARING PLATE

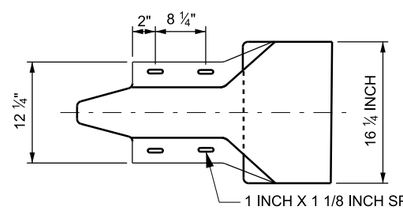

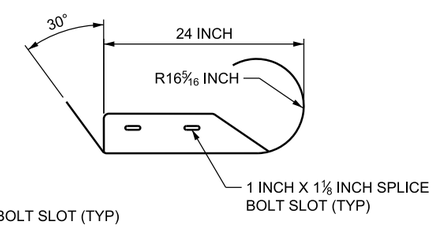

END SECTION (ROUNDED)

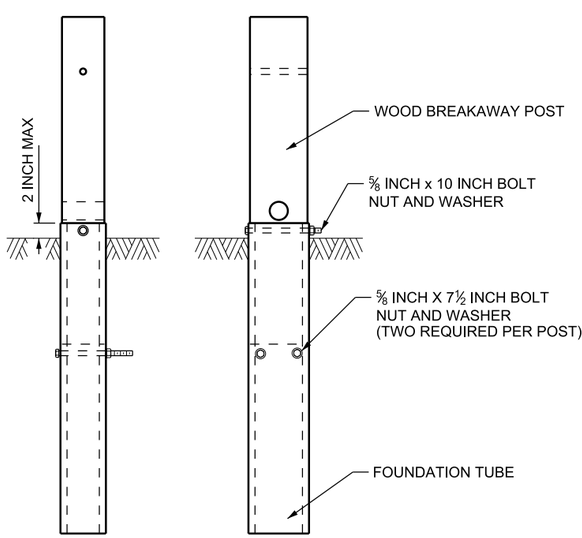

ANCHOR POST ASSEMBLY

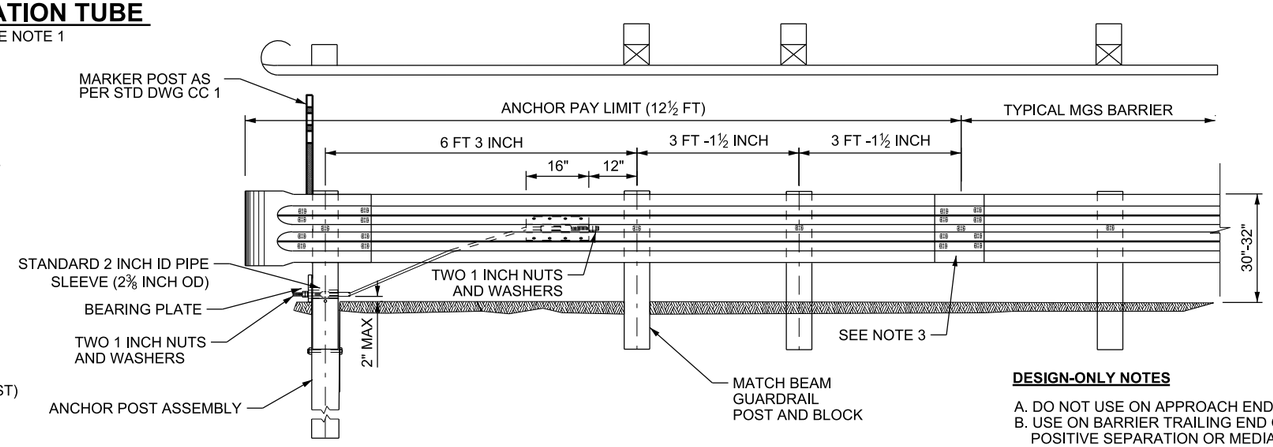

W-BEAM ANCHOR INSTALLATION

DESIGN-ONLY NOTES

A. DO NOT USE ON APPROACH END.
B. USE ON BARRIER TRAILING END ON DIVIDED ROADWAYS WITH A POSITIVE SEPARATION OR MEDIAN WIDTH GREATER THAN OR EQUAL TO 36 FT MEASURED FROM EDGE OF TRAVEL LANE TO EDGE OF TRAVEL LANE WHEN BARRIER END IS OUTSIDE THE MAXIMUM REQUIRED CLEAR ZONE AS DEFINED IN STD DWG DD 18 AND THE AASHTO ROADSIDE DESIGN GUIDE, CURRENT EDITION.

NOTES:

1. MANUFACTURE ACCORDING TO AASHTO GUIDE TO STANDARDIZED HIGHWAY BARRIER HARDWARE.
2. MEET STANDARD SPECIFICATION 02841 STEEL AND GALVANIZING REQUIREMENTS.
3. INSTALL SPLICE BOLTS ONLY WITHIN THE MID-SPAN SPLICE JOINT. DO NOT INSTALL CENTER BOLT.

REVISIONS

NO.	DATE	APPR.	REMARKS

UTAH DEPARTMENT OF TRANSPORTATION
STANDARD DRAWINGS FOR ROAD AND BRIDGE CONSTRUCTION
SALT LAKE CITY, UTAH

RECOMMENDED FOR APPROVAL — JAN.01.2017 DATE
CHAIRMAN STANDARDS COMMITTEE APPROVED — JAN.01.2017 DATE
DEPUTY DIRECTOR

31 INCH W-BEAM GUARDRAIL ANCHOR TYPE 1
STANDARD DRAWING TITLE

STD. DWG. NO.
BA 4C1

DGN File:L:\Standard Drawings\Imperial\2017 Approved\1-A01 Drawings\BA04C1.dgn
28-NOV-2016

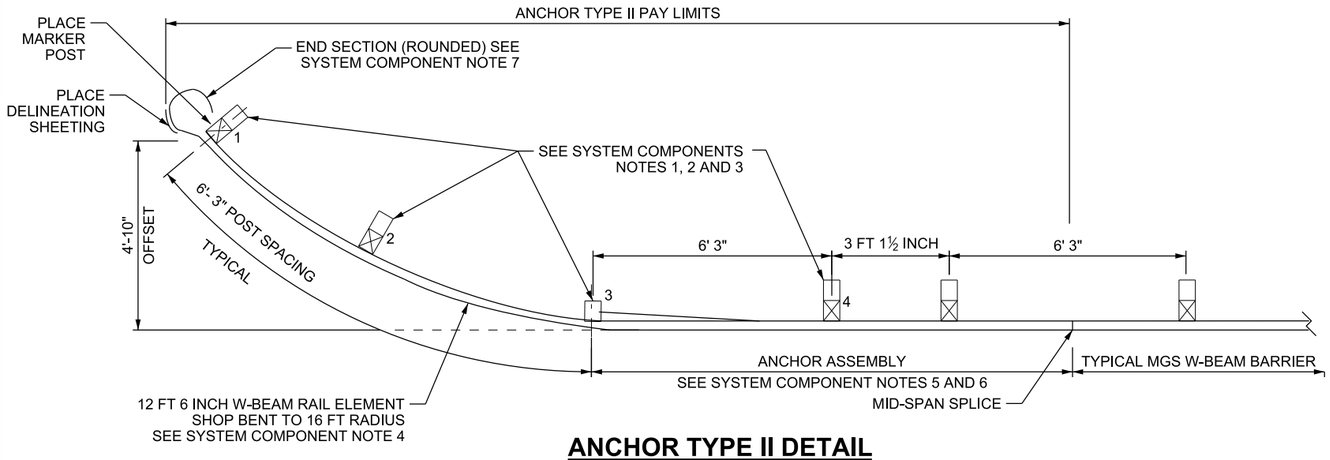

ANCHOR TYPE II DETAIL

SEE NOTE A

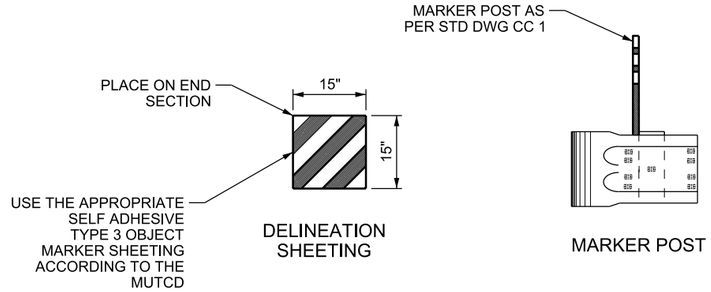

DELINEATION DETAIL

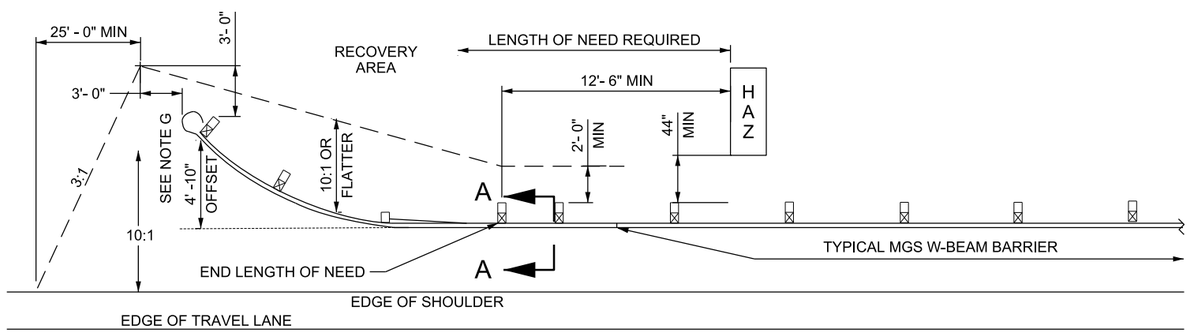

PLAN VIEW

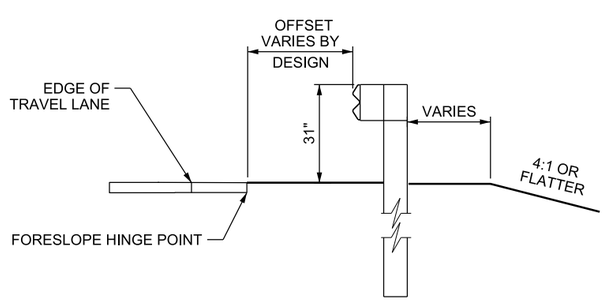

SECTION A-A

DESIGN-ONLY NOTES:

A. THIS IS A CRASH WORTHY ANCHOR SYSTEM.

B. USE PERMITTED ON APPROACH END OF W-BEAM BARRIER WHEN DESIGN SPEED AND POSTED SPEED ARE LESS THAN OR EQUAL TO 40 MPH. MEET GRADING REQUIREMENTS FOR APPROACH END ACCORDING TO STD DWG CC 9B.

C. USE ANCHORING SYSTEM ON TRAILING END OF W-BEAM BARRIER ON 2 - LANE, 2 - WAY ROADWAYS OR MULTI-LANE NON-DIVIDED ROADWAYS WHEN THE TYPICAL BARRIER END IS OFFSET AT OR BEYOND THE MINIMUM REQUIRED CLEAR ZONE OF OPPOSING TRAFFIC.

D. USE AN APPROVED END TREATMENT, AS LISTED IN THE GUIDELINES FOR CRASH CUSHION AND BARRIER END TREATMENTS, CURRENT EDITION WHEN DOWNSTREAM BARRIER END IS OFFSET LESS THAN THE MINIMUM REQUIRED CLEAR ZONE OF OPPOSING TRAFFIC.

E. USE PERMITTED ON THE END OF CONCRETE BARRIER WHEN A W-BEAM TRANSITION, STD DWG BA 4B2 IS INSTALLED.

F. USE ON TANGENT OR FLARED BARRIER SYSTEMS.

G. USE OF THIS ANCHORAGE PERMITTED ON A SLOPE NO STEEPER THAN 10:1. MATCH ROADWAY CROSS-SLOPE IF SUPERELEVATED MORE THAN 2 PERCENT. REFER TO STD DWG BA 4D SERIES.

NOTES:

1. USE FOUNDATION TUBES, ACCORDING TO STD DWG BA 4C1, AT POSTS 1, 2, AND 3.
2. USE SHORTENED WOOD BREAKAWAY POST, ACCORDING TO STD DWG BA 4C1, AT POSTS 1, 2, AND 3.
   a. DO NOT INSTALL BLOCK AT POST 3.
3. USE TYPICAL POST AND BLOCK AT POST 4.
4. USE STANDARD G4 GUARDRAIL 12 FT 6 INCH RAIL, SHOP BENT TO A 16 FT RADIUS BETWEEN POSTS 1 AND 3. SEE STD DWG BA 4F1 FOR STANDARD G4 GUARDRAIL PANEL DETAIL.
5. USE 12 FT 6 INCH ANCHOR RAIL ELEMENT, ACCORDING TO STD DWG BA 4C1, BETWEEN POSTS 3 AND END OF TYPICAL MGS W-BEAM BARRIER RUN.
6. USE ANCHOR BLOCK AND CABLE ASSEMBLY, ACCORDING TO STD DWG BA 4C1.
7. USE ROUNDED END SECTION ACCORDING TO STD DWG BA 4C1.
8. INSTALL MARKER POSTS AND SHEETING AS PER STD DWG CC 1 TYPE H DETAIL.

NO.	DATE	APPR.	REMARKS

REVISIONS

UTAH DEPARTMENT OF TRANSPORTATION
STANDARD DRAWINGS FOR ROAD AND BRIDGE CONSTRUCTION
SALT LAKE CITY, UTAH

RECOMMENDED FOR APPROVAL — JAN. 01, 2017 DATE
CHAIRMAN STANDARDS COMMITTEE APPROVED — JAN. 01, 2017 DATE
DEPUTY DIRECTOR

W-BEAM GUARDRAIL ANCHOR TYPE II
STANDARD DRAWING TITLE

STD. DWG. NO.
BA 4C2

DGN File:L:\Standard Drawings\Imperial\2017 Approved\1-All Drawings\BA04C2.dgn
28-NOV-2016

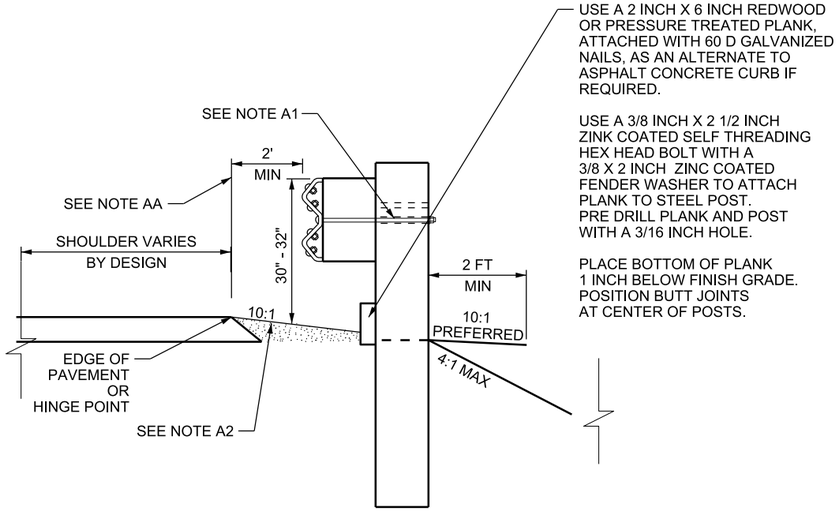

DESIGN-ONLY NOTES:

AA. THE 2 FT MIN OFFSET IS OPTIONAL WHEN ROADWAY DESIGN REQUIRES 12 FT OR WIDER EFFECTIVE SHOULDER. (PLACE AS FAR OFF PAVEMENT EDGE AS PRACTICAL)

NOTES:

A1. USE TOP HOLE OF POST TO SET RAIL HEIGHT WHEN PAVEMENT SURFACE, TRAVEL LANES, ARE CONSTRUCTED WITH PORTLAND CEMENT CONCRETE PAVEMENT. USE BOTTOM HOLE OF POST TO SET RAIL HEIGHT WHEN PAVEMENT SURFACE, TRAVEL LANES, ARE CONSTRUCTED WITH HOT MIX ASPHALT (HMA).

A2. MATCH ROADWAY CROSS-SLOPE IF SUPERELEVATED MORE THAN 2 PERCENT.

DETAIL A: INITIAL INSTALLATION

USE 78" LONG POSTS

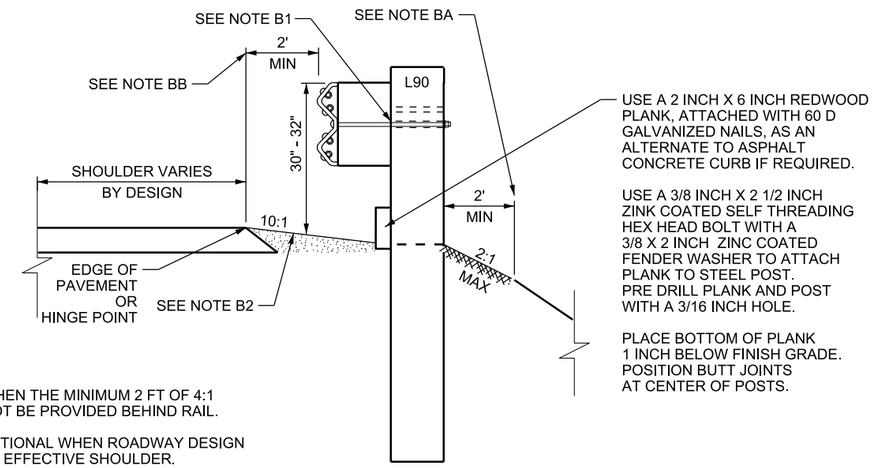

DESIGN-ONLY NOTES:

BA. USE THIS INSTALLATION WHEN THE MINIMUM 2 FT OF 4:1 OR FLATTER SLOPE CANNOT BE PROVIDED BEHIND RAIL.

BB. THE 2 FT MIN OFFSET IS OPTIONAL WHEN ROADWAY DESIGN REQUIRES 12 FT OR WIDER EFFECTIVE SHOULDER. (PLACE AS FAR OFF PAVEMENT EDGE AS PRACTICAL)

NOTES:

B1. USE TOP HOLE OF POST TO SET RAIL HEIGHT WHEN PAVEMENT SURFACE, TRAVEL LANES, ARE CONSTRUCTED WITH PORTLAND CEMENT CONCRETE PAVEMENT. USE BOTTOM HOLE OF POST TO SET RAIL HEIGHT WHEN PAVEMENT SURFACE, TRAVEL LANES, ARE CONSTRUCTED WITH HOT MIX ASPHALT (HMA).

B2. MATCH ROADWAY CROSS-SLOPE IF SUPERELEVATED MORE THAN 2 PERCENT.

DETAIL B: INITIAL LONG POST INSTALLATION

USE 90" LONG POSTS

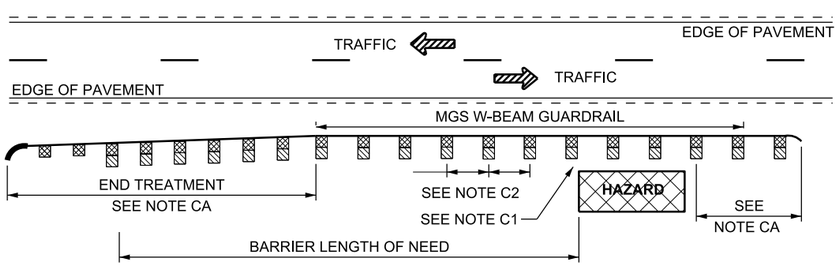

DESIGN-ONLY NOTES:

CA. REFER TO TYPICAL LAYOUT DRAWING TO DETERMINE APPROACH END TREATMENT OR TRAILING END ANCHOR REQUIREMENTS.

NOTE:

C1. REFER TO STD DWG BA 4H3 IF 38 INCH CLEARANCE IS NOT ACHIEVED FROM BACK OF POST TO FACE OF HAZARD.
C2. USE 6 FT 3 INCH POST SPACING WITH TYPICAL APPLICATIONS.

DETAIL C: TYPICAL INSTALLATION

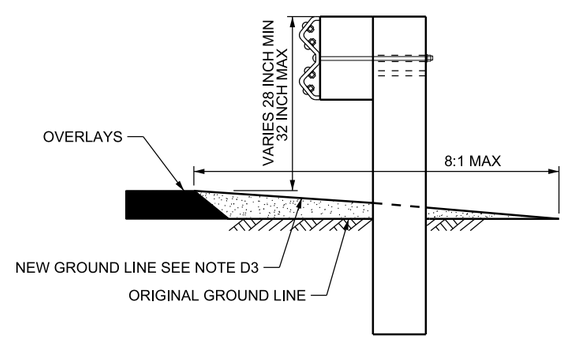

DETAIL D: EXISTING RAIL ELEMENT RAISED

DO NOT USE FOR INITIAL INSTALLATION
SEE DISIGN-ONLY NOTES

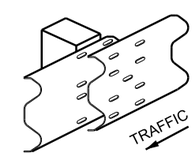

SPLICE LAP DETAIL

DESIGN-ONLY NOTES:

DA. RAISE RAIL ELEMENT WHEN OVERLAY IS REQUIRED AND WHEN THE MINIMUM REQUIRED HEIGHT CANNOT BE MAINTAINED.

DB. RAISING THE RAIL ELEMENT TO REQUIRED HEIGHT, WITH THE 2 HOLE POST SYSTEM, REQUIRED BEFORE THE MINIMUM HEIGHT OF THE RAIL ELEMENT ABOVE GROUND LEVEL CAN BE REDUCED TO THE MINIMUM OF 28 INCH.

DC. RAISED RAIL ELEMENT WILL ACCOMMODATE 6 INCH TO 8 INCH OF OVERLAY MATERIAL.

DD. ADD SEPARATE PAY ITEM FOR SHOULDERING MATERIAL REQUIRED TO MEET MINIMUM RAIL HEIGHT REQUIREMENTS.

NOTES:

D1. SLOPE OF SHOULDER INTO FACE OF RAIL NOT TO EXCEED 8:1.

D2. RAISE REDWOOD PLANKING WHEN REQUIRED.

D3. MATCH ROADWAY CROSS-SLOPE IF SUPERELEVATED MORE THAN 2 PERCENT.

NO.	DATE	APPR.	REMARKS

REVISIONS

UTAH DEPARTMENT OF TRANSPORTATION
STANDARD DRAWINGS FOR ROAD AND BRIDGE CONSTRUCTION
SALT LAKE CITY, UTAH

RECOMMENDED FOR APPROVAL — JAN.01.2017 DATE
CHAIRMAN STANDARDS COMMITTEE APPROVED — JAN.01.2017 DATE
DEPUTY DIRECTOR — DATE

MIDWEST 31 INCH W-BEAM GUARDRAIL INSTALLATIONS

STANDARD DRAWING TITLE

STD. DWG. NO.
BA 4D1

DGN File:L:\Standard_Drawings\Imperial\2017 Approved\1-All Drawings\BA0401.dgn
28-NOV-2016

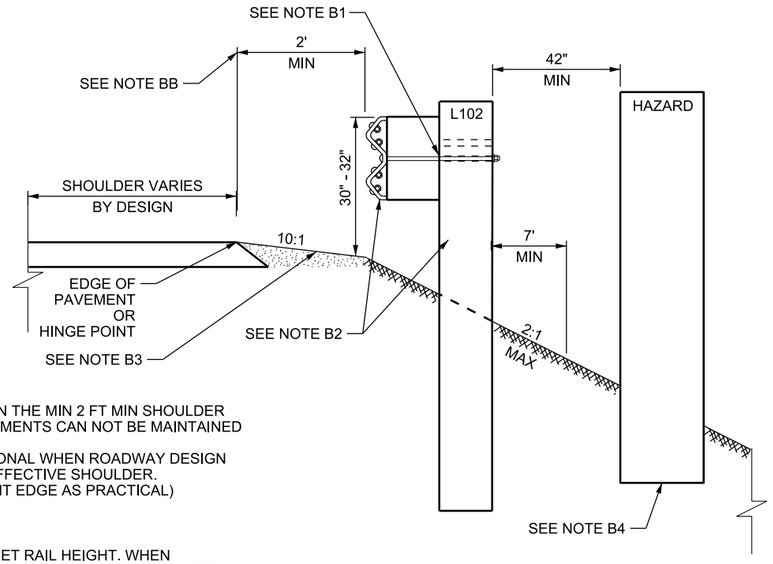

DESIGN-ONLY NOTES:

BA. USE THIS INSTALLATION WHEN THE MIN 2 FT MIN SHOULDER OFFSET AND SLOPE REQUIREMENTS CAN NOT BE MAINTAINED ACCORDING TO BA 4D1.
BB. THE 2 FT MIN OFFSET IS OPTIONAL WHEN ROADWAY DESIGN REQUIRES 12 FT OR WIDER EFFECTIVE SHOULDER. (PLACE AS FAR OFF PAVEMENT EDGE AS PRACTICAL)

NOTES:

B1. USE TOP HOLE OF POST TO SET RAIL HEIGHT. WHEN PAVEMENT SURFACE, TRAVEL LANES, ARE CONSTRUCTED WITH PORTLAND CEMENT CONCRETE PAVEMENT. USE BOTTOM HOLE OF POST TO SET RAIL HEIGHT WHEN PAVEMENT SURFACE, TRAVEL LANES, ARE CONSTRUCTED WITH HOT MIX ASPHALT (HMA).
B2. OMITTED POSTS IS NOT ALLOWED.
B3. MATCH ROADWAY CROSS-SLOPE TO FACE OF RAIL IF SUPERELEVATED MORE THAN 2 PERCENT.
B4. BARRIER DEFLECTION INCREASES TO 42 INCHES WITH THIS INSTALLATION.

DETAIL E: INITIAL LONG POST 2:1 FILL SLOPE INSTALLATION

USE 102" LONG POSTS

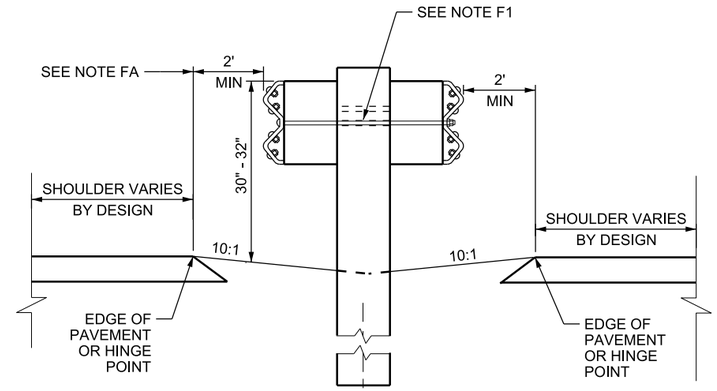

DESIGN-ONLY NOTES:

FA. THE 2 FT MIN BARRIER OFFSET IS OPTIONAL WHEN ROADWAY DESIGN REQUIRES A 12 FT OR WIDER EFFECTIVE SHOULDER. (PLACE AS FAR OFF PAVEMENT AS PRACTICAL.)

NOTES:

F1. USE TOP HOLE TO MOUNT BLOCK & RAIL IF MEDIAN BARRIER IS PLACED 12 FT OR GREATER FROM TRAVEL LANES .
F2. RAISE BOTH RAIL ELEMENTS AS PER RAIL ELEMENT RAISED DETAIL, WHEN REQUIRED.
F3. ATTACH REQUIRED DELINEATION ON THE POST.
F4. ALL THREAD ROD PERMITTED FOR USE TO ATTACH W-BEAM, POSTS AND BLOCKS. FULL ENGAGEMENT OF NUT REQUIRED ON BOTH SIDES OF RAIL AND NO MORE THAN 1/2 INCH OF EXPOSED ENDS ABOVE NUT.

DETAIL F: MEDIAN BARRIER

USE 78" LONG POSTS

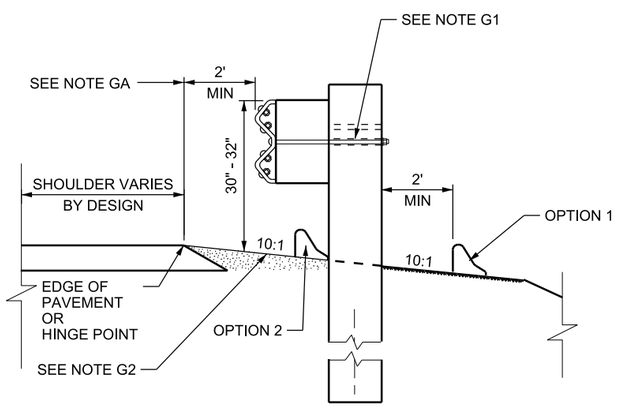

DESIGN-ONLY NOTES:

GA. THE 2 FT MIN BARRIER OFFSET IS OPTIONAL WHEN ROADWAY DESIGN REQUIRES A 12 FT OR WIDER EFFECTIVE SHOULDER . (PLACE AS FAR OFF PAVEMENT AS PRACTICAL)

OPTION 1: PREFERRED INSTALLATION.

OPTION 2: PLACE FACE OF ASPHALT CONCRETE CURB BEHIND FACE OF RAIL. 2 INCH MAXIMUM CURB HEIGHT WHEN USED IN FRONT OF POST.

NOTE:

G1. USE TOP HOLE OF POST TO SET RAIL HEIGHT WHEN PAVEMENT SURFACE, TRAVEL LANES, ARE CONSTRUCTED WITH PORTLAND CEMENT CONCRETE PAVEMENT. USE BOTTOM HOLE OF POST TO SET RAIL HEIGHT WHEN PAVEMENT SURFACE, TRAVEL LANES, ARE CONSTRUCTED WITH HOT MIX ASPHALT (HMA).
G2. MATCH ROADWAY CROSS-SLOPE TO 2 FT BEHIND POST IF SUPERELEVATED MORE THAN 2 PERCENT.

DETAIL G: INSTALLATION W/ASPHALT CONCRETE CURB

USE 78" LONG POSTS

REVISIONS

NO.	DATE	APPR.	REMARKS

UTAH DEPARTMENT OF TRANSPORTATION
STANDARD DRAWINGS FOR ROAD AND BRIDGE CONSTRUCTION
SALT LAKE CITY, UTAH

RECOMMENDED FOR APPROVAL — JAN.01.2017 DATE
CHAIRMAN STANDARDS COMMITTEE APPROVED — JAN.01.2017 DATE
DEPUTY DIRECTOR

MIDWEST 31 INCH W-BEAM GUARDRAIL INSTALLATIONS

STANDARD DRAWING TITLE

STD. DWG. NO.
BA 4D2

DGN File: L:\Standard Drawings\Imperial\2017 Approved\1-All Drawings\BA04D2.dgn
28-NOV-2016

CASE 1 POST LENGTH AND DRILLED ROCK FORMULA
40" - A = B
40" = TYPICAL FULL POST EMBEDMENT A = COMPACTED GRADE MATERIAL (0 INCHES TO 18 INCHES) B = DRILLED ROCK HOLE DEPTH (CUT POST TO MEET DEPTH REQUIREMENT NOT TO EXCEED 24 INCHES. SEE NOTE 3)

CASE 2 DRILLED ROCK FORMULA
40" - A = B
40" = TYPICAL FULL POST EMBEDMENT A = COMPACTED GRADE MATERIAL (18 INCHES TO 40 INCHES) B = DRILLED ROCK HOLE DEPTH

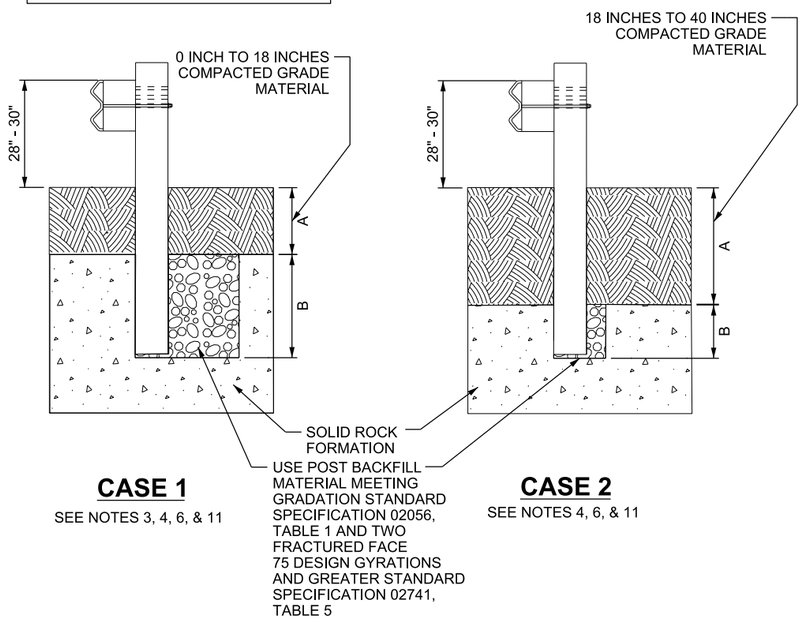

CASE 1

SEE NOTES 3, 4, 6, & 11

CASE 2

SEE NOTES 4, 6, & 11

DETAIL A: GUARDRAIL POST IN ROCK FORMATION

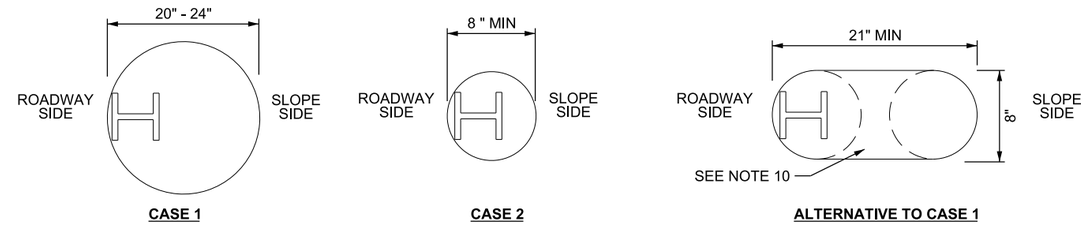

PLAN VIEW STEEL POST

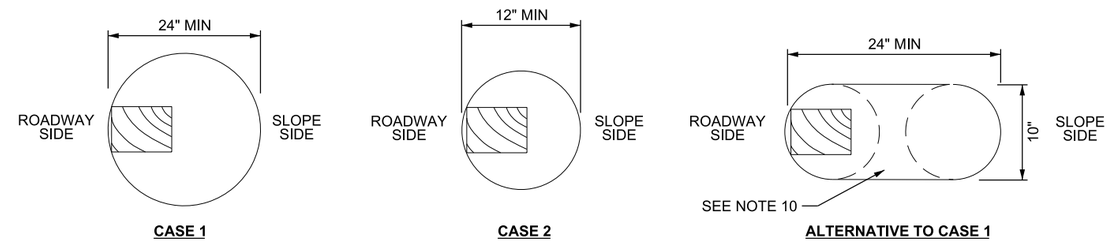

PLAN VIEW WOOD POSTS

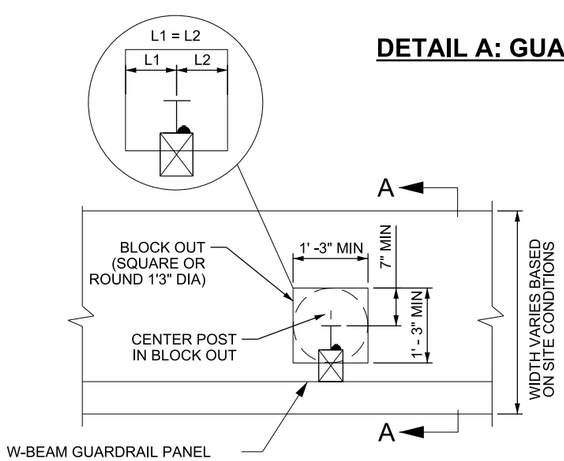

POSTS DETAIL

STEEL POST SHOWN
WOOD POST SIMILAR

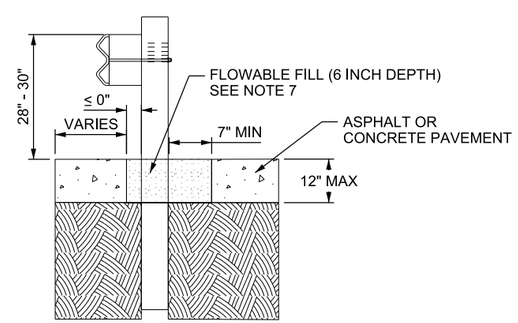

SECTION A-A

SEE NOTES 4, 5, 7, 8 & 9

DETAIL B: GUARDRAIL POST IN HMA / CONCRETE PAVEMENT

NOTES:

1. USE DETAIL "A" WHEN SOLID ROCK CONDITIONS PROHIBIT THE STANDARD GUARDRAIL POST INSTALLATION.
2. USE DETAIL "B" WHEN GUARDRAIL POST, TYPE "G" OR "H" END TREATMENT POST INSTALLATION IS REQUIRED THROUGH HMA OR CONCRETE PAVEMENT.
3. CUT BOTTOM OFF POST AT THE REQUIRED LENGTH SUFFICIENT TO MEET TOP OF RAIL HEIGHT REQUIREMENT WHEN INSTALLING POSTS WITHIN SOLID ROCK FORMATIONS. COAT ALL FIELD-CUT STEEL POSTS WITH A FIELD-APPLIED COLD ZINC MATERIAL.
4. PLACE POST TO ROADWAY SIDE OF HOLE.
5. THESE METHODS ARE APPLICABLE TO TYPICAL W-BEAM GUARDRAIL. ALSO APPLICABLE TO TYPE "F", "G", AND "H" END TREATMENTS WITH FOUNDATION TUBES, STEEL BREAKAWAY POSTS AND CRT POSTS.
6. CONSULT TYPE "F," "G," AND "H" END TREATMENT MANUFACTURER FOR INSTALLATION REQUIREMENTS IN SOLID ROCK FORMATIONS.
7. USE FLOWABLE FILL MEETING STANDARD SPECIFICATION 03575 WITH 28 DAY COMPRESSIVE STRENGTH OF 50 PSI TO 120 PSI. COMPACT EXISTING MATERIAL AROUND GUARDRAIL POST PRIOR TO INSTALLATION OF FLOWABLE FILL.
8. SEE INSTALLATION DETAIL STD DWG BA 4D1 OR BA 4D2 FOR POST LENGTH REQUIREMENTS.
9. CREATE BLOCK OUT BY FORMING, SAW CUTTING OR OTHER SIMILAR METHOD.
10. EXCAVATE AREA BETWEEN DRILLED HOLES. MEET CASE 1 OR CASE 2 BACKFILL REQUIREMENTS.
11. COMPACT BACKFILL ACCORDING TO STANDARD SPECIFICATION 02841.

REVISIONS

NO.	DATE	APPR.	REMARKS

UTAH DEPARTMENT OF TRANSPORTATION
STANDARD DRAWINGS FOR ROAD AND BRIDGE CONSTRUCTION
SALT LAKE CITY, UTAH

RECOMMENDED FOR APPROVAL — JAN 01, 2017 DATE
CHAIRMAN STANDARDS COMMITTEE APPROVED — JAN 01, 2017 DATE
DEPUTY DIRECTOR

W-BEAM GUARDRAIL TYPICAL LINE POST EMBEDMENT SPECIAL CONDITIONS

STANDARD DRAWING TITLE

STD. DWG. NO.
BA 4D3

DGN File: L:\Standard Drawings\Imperial\2017 Approved\1-All Drawings\BA04D3.dgn
28-NOV-2016

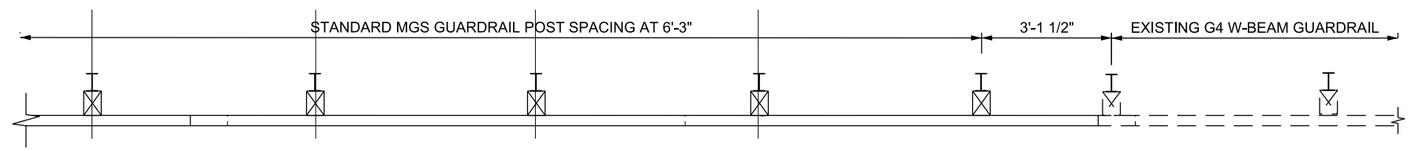

PLAN VIEW

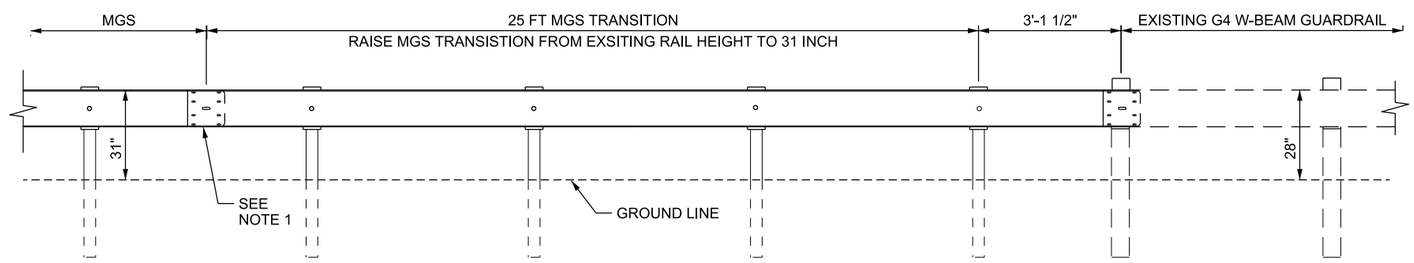

ELEVATION VIEW

MIDWEST GUARDRAIL SYSTEM (MGS) W-BEAM TRANSITION TO G4 W-BEAM

DESIGN-ONLY NOTES:

A. USE THIS TRANSITION WHEN CONNECTING TO G4 W-BEAM BARRIER WITH MIDWEST 31 INCH BARRIER.

B. USE THIS TRANSITION WHEN EXISTING BARRIER RUN MEETS THE MINIMUM 28 INCH BARRIER HEIGHT REQUIREMENT.

C. RAISE RAIL ELEMENT THROUGH THE ENTIRE BARRIER RUN TO MEET MINIMUM REQUIRED HEIGHT WHEN THREE HOLE POST SYSTEM IS AVAILABLE. DO NOT EXCEED 32 INCHES. REFER TO BA 4D1 DETAIL D.

D. REMOVE AND REPLACE EXISTING G4 W-BEAM BARRIER WITH MIDWEST 31 INCH W-BEAM BARRIER IF A THREE HOLE POST SYSTEM IS NOT PRESENT.

NOTES:

1. INSTALL SPLICE BOLTS ONLY WITHIN THE MGS TRANSISTION AND MGS SYSTEM. DO NOT INSTALL CENTER BOLT.

REVISIONS

NO.	DATE	APPR.	REMARKS

UTAH DEPARTMENT OF TRANSPORTATION
STANDARD DRAWINGS FOR ROAD AND BRIDGE CONSTRUCTION
SALT LAKE CITY, UTAH

RECOMMENDED FOR APPROVAL — JAN.01.2017 DATE
CHAIRMAN STANDARDS COMMITTEE APPROVED — JAN.01.2017 DATE
DEPUTY DIRECTOR

MIDWEST 31 INCH W-BEAM GUARDRAIL TRANSITION LAYOUT
STANDARD DRAWING TITLE

STD. DWG. NO.
BA 4D4

28-NOV-2016 DGN File:L:\Standard.Drawings\Imperial\2017 Approved\L-All Drawings\BA04D4.dgn

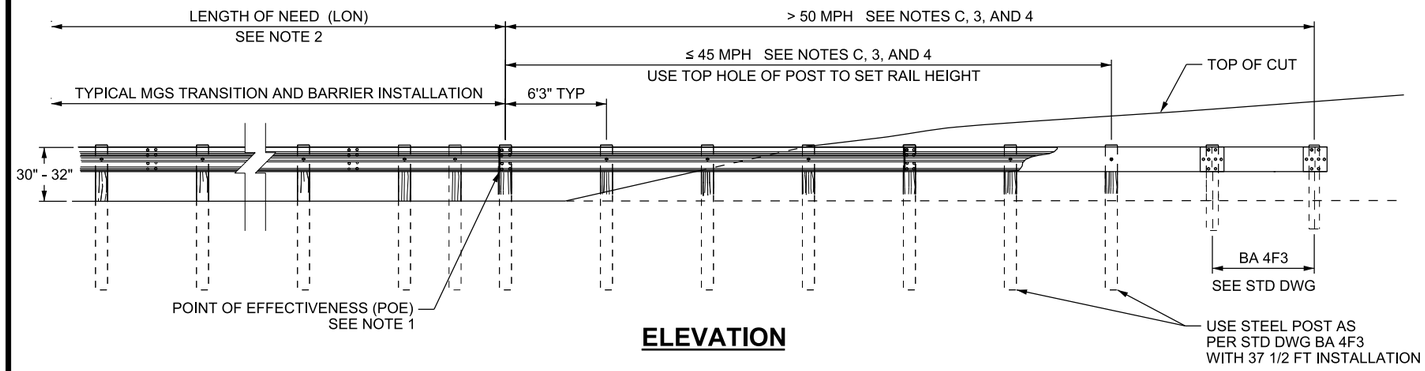

ELEVATION

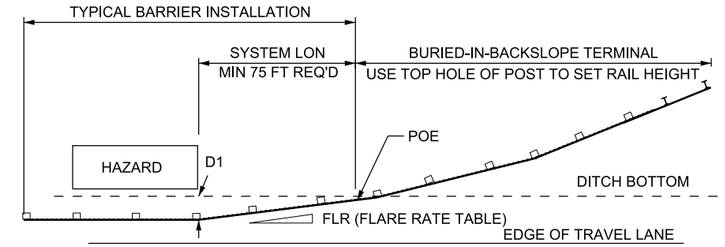

SYSTEM LON = FLR x D1
USE THIS DETAIL IF BACKSLOPE IS STEEPER 3:1.
THIS DETAIL APPLIES AT ALL SPEED LEVELS.

DETAIL A

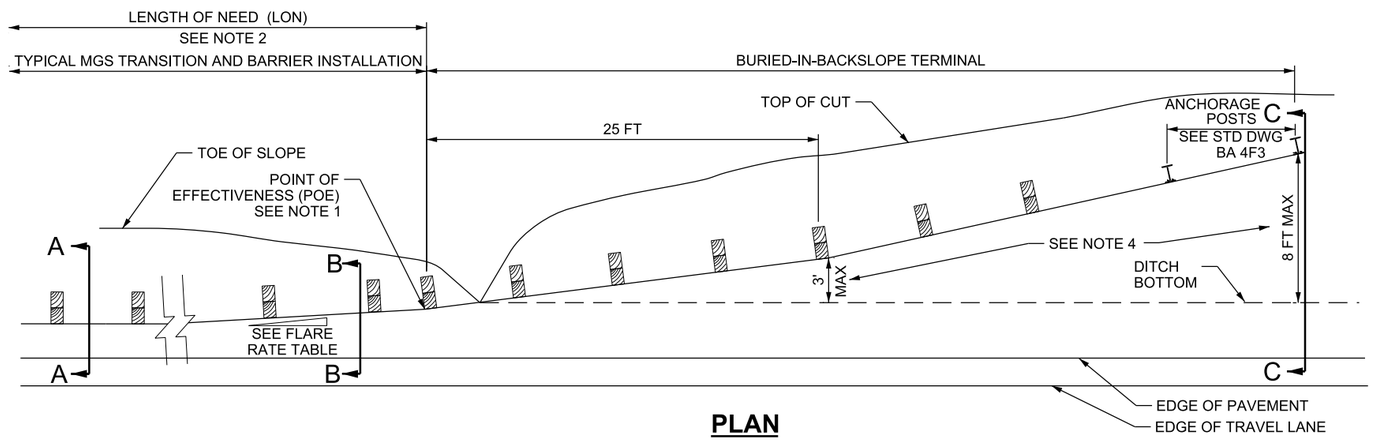

PLAN

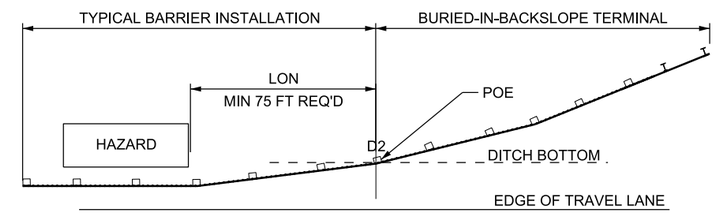

≥ 50 MPH "LON" = 450 - (15 x D2) ≤ 45 MPH "LON" = 250 - (15 x D2)
USE THIS DETAIL IF BACKSLOPE IS 3:1 TO A MINIMUM 4:1
SEE NOTE C

DETAIL B

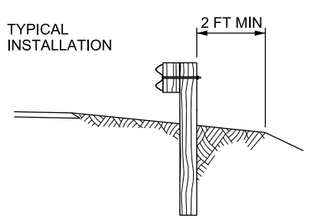

SECTION A-A

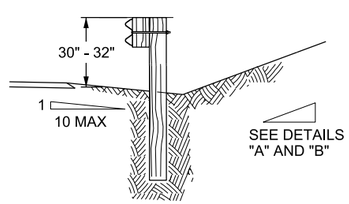

SECTION B-B

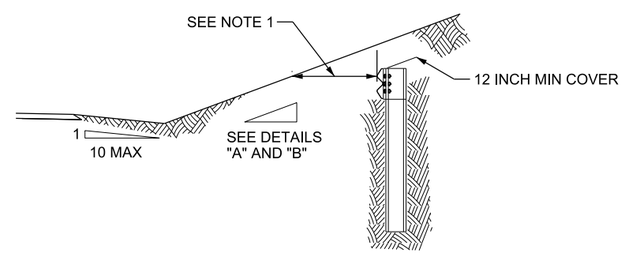

SECTION C-C

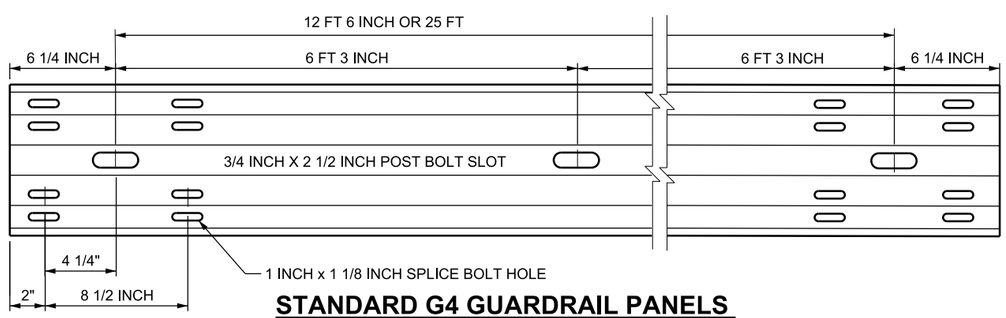

STANDARD G4 GUARDRAIL PANELS

USE STANDARD G4 PANEL WITHIN THE BURIED-IN-BACKSLOPE TERMINAL

FLARE RATE TABLE (FLR)	
POSTED SPEED (mph)	RATE
40 OR LESS	9:1
45	10:1
50	11:1
55	12:1
60	14:1
65 OR GREATER	15:1

DESIGN-ONLY NOTES:

A. PRIOR TO USING THIS DESIGN, CONSULT AREA SUPERVISOR TO VERIFY NO NEED EXISTS FOR ACCESS BEHIND THE BARRIER INSTALLATION AND THAT DRAINAGE ISSUES ARE ADDRESSED.

B. DO NOT USE BURIED-IN-BACKSLOPE TERMINAL IN LOCATIONS WHERE THE BACKSLOPE IS FLATTER THAN 3:1, AND THERE IS NO DITCH OR A NARROW SHALLOW DITCH AND THE TOE OF SLOPE IS WITHIN 20 FT OF THE TRAVEL LANE.

C. DESIGN BURIED IN BACKSLOPE TERMINALS AT 37 1/2 FT FOR SPEEDS 45 MPH AND LESS, AND 50 FT FOR SPEED 50 MPH AND GREATER.

NOTES:

1. THE POINT OF EFFECTIVENESS (POE) IS AT THE RAIL FACE OF THE FIRST POST OF THE TERMINAL PRIOR TO CROSSING THE DITCH BOTTOM OR TOE OF SLOPE.
2. SEE DETAILS "A" AND "B" FOR LENGTH OF NEED (LON) REQUIREMENTS AND BACKSLOPE REQUIREMENTS.
3. REFER TO STD DWG BA 4F3 FOR BURIED-IN-BACKSLOPE TERMINAL ANCHORAGE POST DETAILS.
4. INSTALLATION: USE STANDARD G4 PANEL WITHIN THE BURIED-IN-BACKSLOPE TERMINAL. STARTING AT THE "POE" SOFTLY BEND RAIL ELEMENT 3 FT MAXIMUM FROM THE TOE OF SLOPE AT THE 25 FT POINT OF TERMINAL. SOFTLY BEND RAIL BACK UNTIL THE 1 FT BURIAL HAS BEEN OBTAINED TO A MAXIMUM OF 8 FT FROM THE TOE OF SLOPE FROM THE 25 FT POINT OF THE TERMINAL TO THE END OF THE TERMINAL. THE BURIED-IN-BACKSLOPE TERMINAL WILL BE SLOPED DOWN WHERE THE END IS 8 FT BEHIND THE TOE OF SLOPE AND 1 FT UNDER THE ORIGINAL GROUND LINE IF THE MAXIMUM 8 FT OFFSET IS REACHED AND THE 1 FT BURIAL HAS NOT BEEN ACHIEVED. THE BACK SLOPE AT THE ANCHORAGE POSTS SHOULD LOOK THE SAME AFTER INSTALLATION AS PRIOR TO INSTALLATION.
5. INSTALL A STABILIZATION MAT OVER DISTURBED AREA TO CONTROL EROSION, UNLESS DIRECTED DIFFERENTLY BY PROJECT SPECIFICATION OR ENGINEER.
6. USE IN ESTABLISHED SLOPES. DO NOT BUILD A MOUND TO USE THIS TERMINAL

REVISIONS

NO.	DATE	APPR.	REMARKS

UTAH DEPARTMENT OF TRANSPORTATION
STANDARD DRAWINGS FOR ROAD AND BRIDGE CONSTRUCTION
SALT LAKE CITY, UTAH

RECOMMENDED FOR APPROVAL — JAN. 01, 2017 DATE
CHAIRMAN STANDARDS COMMITTEE APPROVED — JAN. 01, 2017 DATE
DEPUTY DIRECTOR

STANDARD DRAWING TITLE
W-BEAM GUARDRAIL
31 INCH BURIED IN
BACKSLOPE TERMINAL

STD. DWG. NO.
BA 4F1

DGN File:L:\Standard Drawings\Imperial\2017 Approved\1-All Drawings\BA04F1.dgn
28-NOV-2016

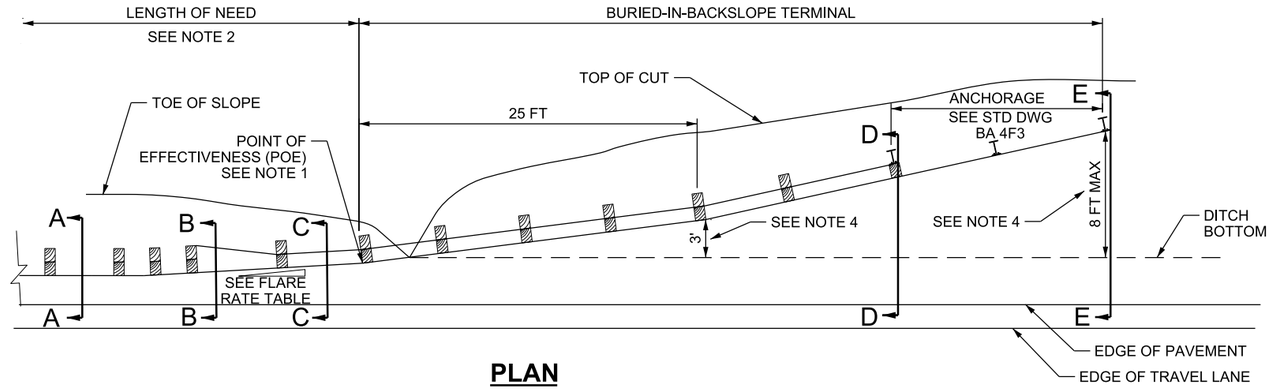

PLAN

FLARE RATE TABLE	
SPEED (MPH)	RATE
40 OR LESS	9:1
45	10:1
50	11:1
* ≥ 55	12 1/2:1

* FLARE RATE TO BE USED ONLY IN CONJUNCTION WITH A BURIED-IN-BACKSLOPE TERMINAL ON HIGHER SPEED ROADWAYS.

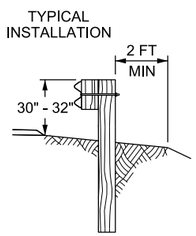

SECTION A-A

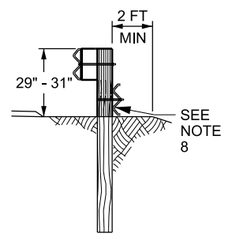

SECTION B-B

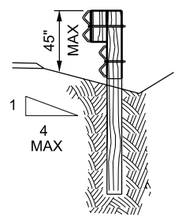

SECTION C-C

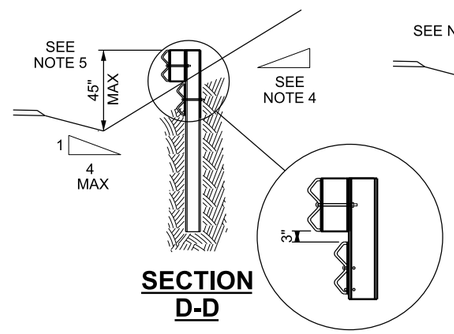

SECTION D-D

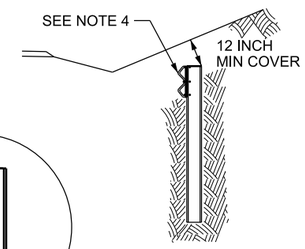

SECTION E-E

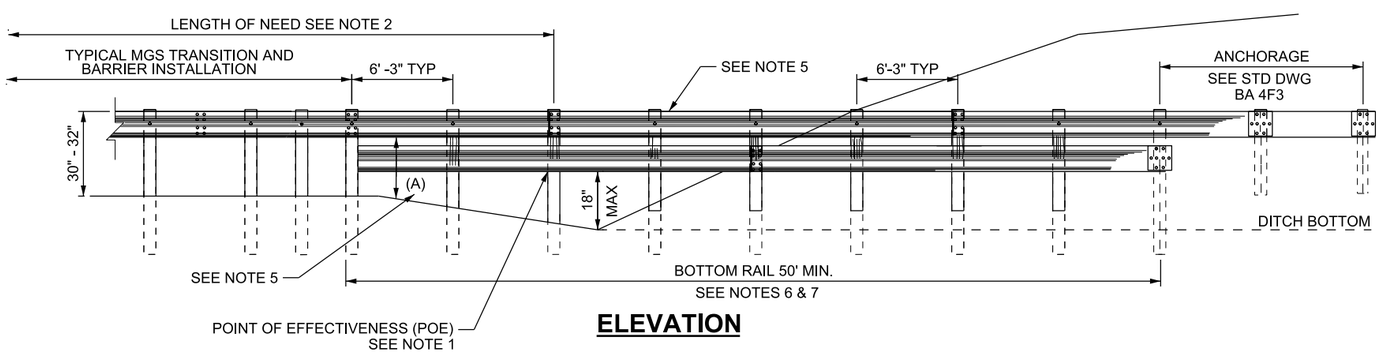

ELEVATION

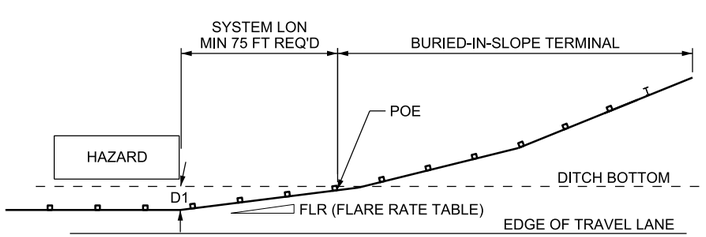

SYSTEM LON = FLR x D1
USE THIS DETAIL IF BACKSLOPE IS STEEPER THAN 3:1. THIS DETAIL APPLIES AT ALL SPEED LEVELS.

DETAIL A

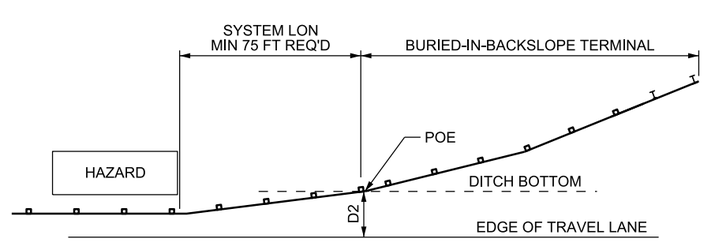

≥ 50 MPH "LON" = 450 - (15 x D2)
≤ 45 MPH "LON" = 250 - (15 x D2)
USE THIS DETAIL IF BACKSLOPE IS 3:1 TO 4:1.
SEE NOTE B.

DETAIL B

DESIGN-ONLY NOTES:

A. CONSULT AREA SUPERVISOR PRIOR TO USING THIS DESIGN TO VERIFY NO NEED EXISTS FOR ACCESS BEHIND THE BARRIER INSTALLATION AND THAT DRAINAGE ISSUES ARE ADDRESSED.

B. DO NOT USE THE BURIED-IN-BACKSLOPE TERMINAL IN LOCATIONS WHERE THE BACKSLOPE IS FLATTER THAN 3:1, AND THERE IS NO DITCH OR A NARROW SHALLOW DITCH AND THE TOE OF SLOPE IS WITHIN 20 FT OF THE TRAVEL LANE.

NOTES:

1. THE POINT OF EFFECTIVENESS (POE) IS AT THE RAIL FACE OF THE FIRST POST OF THE TERMINAL PRIOR TO CROSSING THE DITCH BOTTOM OR TOE OF SLOPE.
2. SEE DETAILS "A" AND "B" FOR LENGTH OF NEED (LON) REQUIREMENTS AND BACKSLOPE REQUIREMENTS.
3. REFER TO STD DWG BA 4F3 FOR BURIED-IN-BACKSLOPE TERMINAL ANCHORAGE POST DETAILS.
4. INSTALLATION: STARTING AT THE "POE" SOFTLY BEND RAIL ELEMENT 3 FT MAXIMUM FROM THE TOE OF SLOPE AT THE 25 FT POINT OF TERMINAL. SOFTLY BEND RAIL BACK UNTIL THE 1 FT BURIAL HAS BEEN OBTAINED TO A MAXIMUM OF 8 FT FROM THE TOE OF SLOPE FROM THE 25 FT POINT OF THE TERMINAL TO THE END OF THE TERMINAL. THE BURIED-IN-BACKSLOPE TERMINAL WILL BE SLOPED DOWN WHERE THE END IS 8 FT BEHIND THE TOE OF SLOPE AND 1 FT UNDER THE ORIGINAL GROUND LINE IF THE MAXIMUM 8 FT OFFSET IS REACHED AND THE 1 FT BURIAL HAS NOT BEEN ACHIEVED. THE BACK SLOPE AT THE ANCHORAGE POSTS SHOULD LOOK THE SAME AFTER INSTALLATION AS PRIOR TO INSTALLATION.
5. USE TOP HOLE OF POST TO SET RAIL HEIGHT. HOLD THE TOP GUARDRAIL ELEMENT CONSTANT WITH THE TYPICAL BARRIER INSTALLATION. GO UP STREAM 1 POST AND ADD A BOTTOM RAIL ELEMENT UNDER THE STANDARD GUARDRAIL ELEMENT WHEN THE BOTTOM OF THE TOP GUARDRAIL ELEMENT EXCEEDS 18 INCH, AT ANY POINT OF THE SLOPE, POINT (A) ELEVATION VIEW. SLOPE BOTH ELEMENTS DOWN TO MAINTAIN A MAXIMUM HEIGHT OF 45 INCH IN FRONT OF THE TOE OF SLOPE IF THE TOP OF INSTALLATION EXCEEDS 45 INCH FROM THE GROUND, AT ANY POINT IN THE INSTALLATION.
6. BEND THE DOWNSTREAM END OF BOTTOM RAIL TO THE BACKSIDE OF THE POST AND BOLT TO POST.
7. USE 102 INCH LONG POSTS, WOOD OR STEEL,WITH THE SAME WIDTH DIMENSIONS ACCORDING TO STD DWG BA 4A, AT LOCATION REQUIRING BOTTOM RAIL ELEMENT. REFER TO STD DWG BA 4F3 SPECIFIC STEEL POSTS PLACEMENT REQUIREMENTS. MARK ALL 102 INCH POSTS WITH L102 WITH THE SAME METHOD AS DESCRIBED IN NOTE 2 OF STD DWG BA 4A.
8. FIELD DRILLED STEEL POSTS ARE ALLOWED FOR BOTTOM RAIL ELEMENT. USE ZINC RICH PAINT TO COAT FIELD DRILLED HOLES IN POSTS OR RAIL ELEMENTS.
9. INSTALL A STABILIZATION MAT OVER DISTURBED AREA TO CONTROL EROSION.
10. USE IN ESTABLISHED SLOPES. DO NOT BUILD A MOUND TO USE THIS TERMINAL.

REVISIONS

NO.	DATE	APPR.	REMARKS

UTAH DEPARTMENT OF TRANSPORTATION
STANDARD DRAWINGS FOR ROAD AND BRIDGE CONSTRUCTION
SALT LAKE CITY, UTAH

RECOMMENDED FOR APPROVAL — JAN.01.2017 DATE
CHAIRMAN STANDARDS COMMITTEE APPROVED — JAN.01.2017 DATE
DEPUTY DIRECTOR

31 INCH W-BEAM GUARDRAIL BURIED IN BACKSLOPE TERMINAL WITH RUB RAIL
STANDARD DRAWING TITLE

STD. DWG. NO.
BA 4F2

DGN File: L:\Standard Drawings\Imperial\2017 Approved\1-All Drawings\BA04F2.dgn
28-NOV-2016

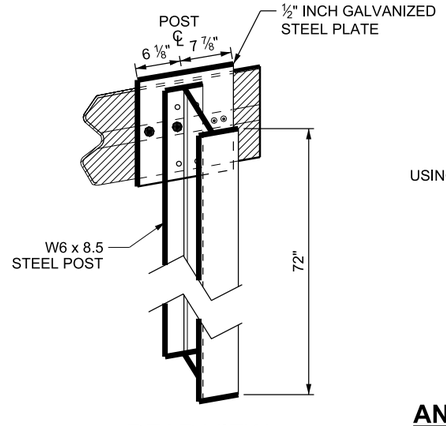

REAR VIEW

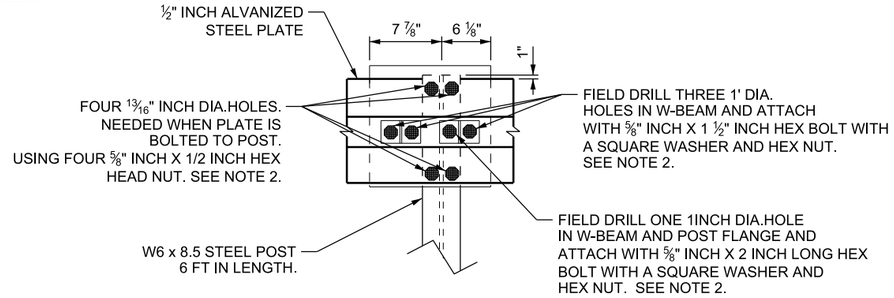

FRONT VIEW

ANCHOR POST/PLATE ATTACHMENT FOR SINGLE RAIL ELEMENT

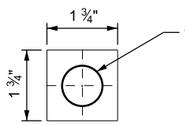

SQUARE WASHER (3/16 INCH THICK,GALVANIZED)

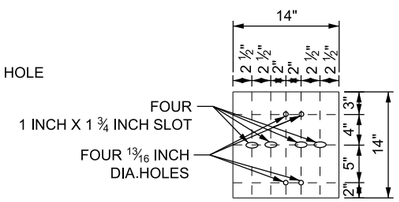

1/2 INCH STEEL PLATE (GALVANIZED)

NOTES:

1. USE 1/2 INCH STEEL PLATE MEETING REQUIREMENTS OF ASTM A 36.
2. GALVANIZING REQUIRED FOR PLATE AND HARDWARE.
3. USE ZINC RICH PAINT TO COAT FIELD DRILLED HOLES.

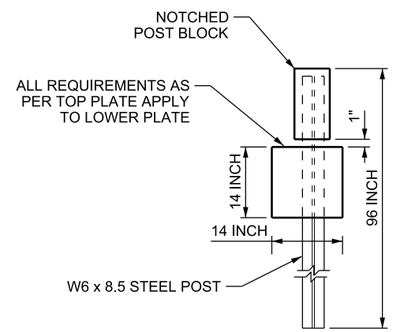

ANCHOR POST/PLATE ATTACHMENT FOR RUB RAIL ELEMENT

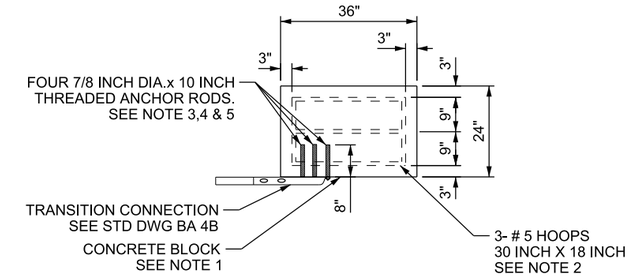

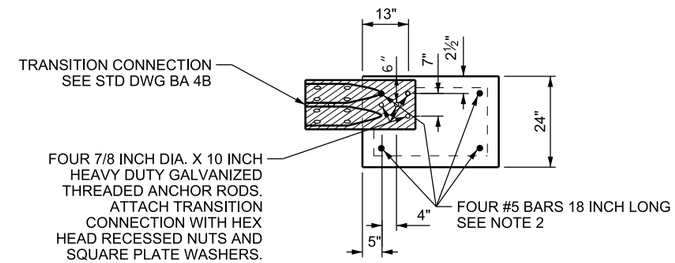

NOTES:

1. USE CONCRETE A(AE).
2. USE COATED REINFORCING STEEL.
3. USE GALVANIZED THREADED ROD.
4. THREADED RODS CAN BE CAST INTO CONCRETE BLOCK OR HOLES CAN BE DRILLED INTO BLOCK AND RODS EPOXIED IN.
5. DRILL HOLES A MINIMUM 9 INCH DEEP. CLEAN DRILLED HOLES PRIOR TO INSERTING TREAD ROD.

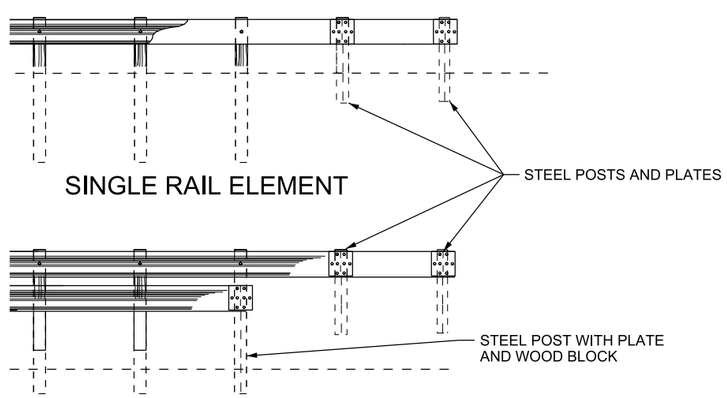

SINGLE RAIL ELEMENT

DOUBLE RAIL ELEMENT

OPTION I STEEL POSTS AND PLATES

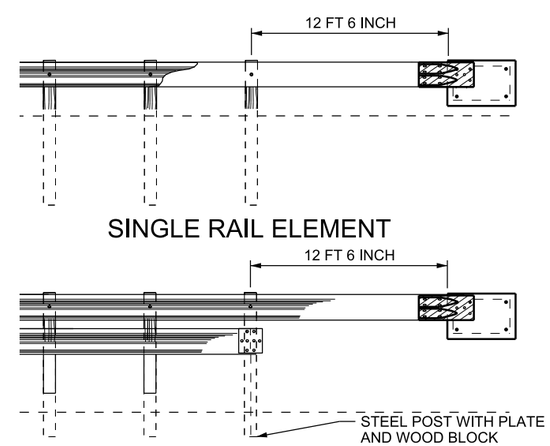

SINGLE RAIL ELEMENT

DOUBLE RAIL ELEMENT

OPTION II CONCRETE BLOCK

REVISIONS

NO.	DATE	APPR.	REMARKS

UTAH DEPARTMENT OF TRANSPORTATION
STANDARD DRAWINGS FOR ROAD AND BRIDGE CONSTRUCTION
SALT LAKE CITY, UTAH

RECOMMENDED FOR APPROVAL — JAN.01.2017 DATE
CHAIRMAN STANDARDS COMMITTEE APPROVED — JAN.01.2017 DATE
DEPUTY DIRECTOR

STANDARD DRAWING TITLE
W-BEAM GUARDRAIL
BURIED IN BACKSLOPE
TERMINAL ANCHOR

STD. DWG. NO.
BA 4F3

DGN File:L:\Standard Drawings\Imperial\2017 Approved\1-All Drawings\BA04F3.dgn
28-NOV-2016

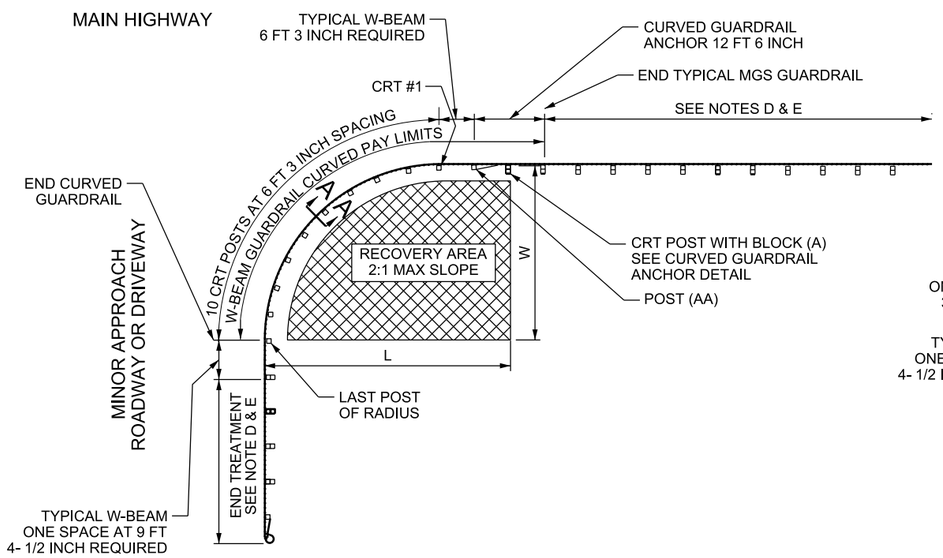

35 FT RADIUS SHOWN

SEE NOTE 5

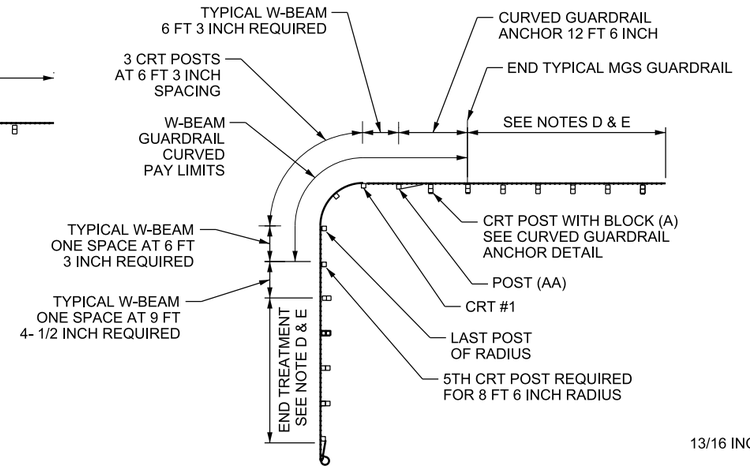

8 FT 6 INCH RADIUS SHOWN

SEE NOTE 5

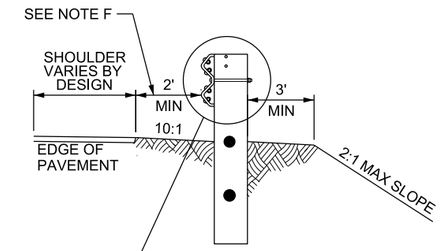

SECTION A-A

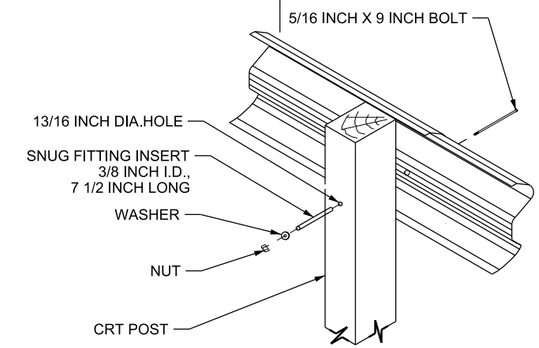

RADIUS (FT)	TOTAL NO. OF CRT POSTS	REQUIRED AREA FREE OF FIXED OBJECTS		RADIUS & GR ANCHOR
		L (FT)	W (FT)	PAY LIMIT TOTAL (FT)
8 FT 6 INCH	5	25	15	32.25
17 FT	6	30	15	45.25
25 FT 6 INCH	8	40	20	59.25
35 FT	11	50	20	74.25

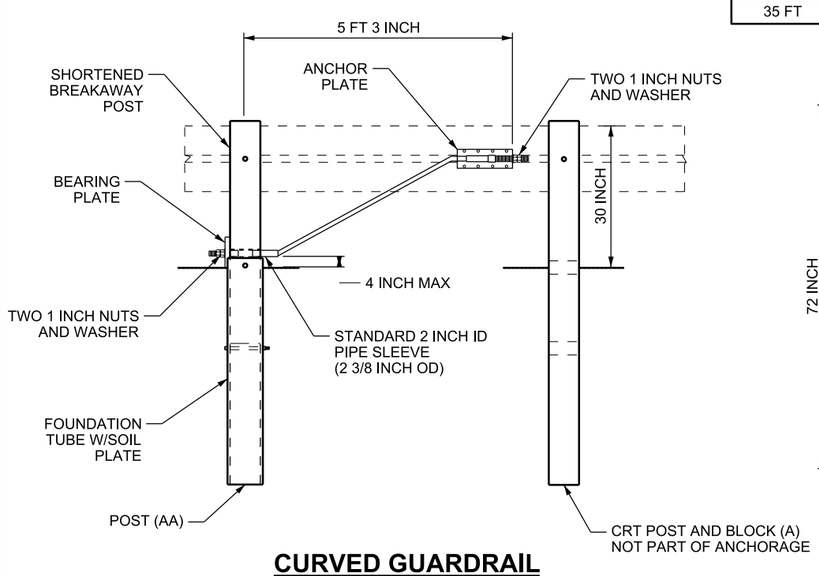

CURVED GUARDRAIL ANCHOR

SEE NOTE 4

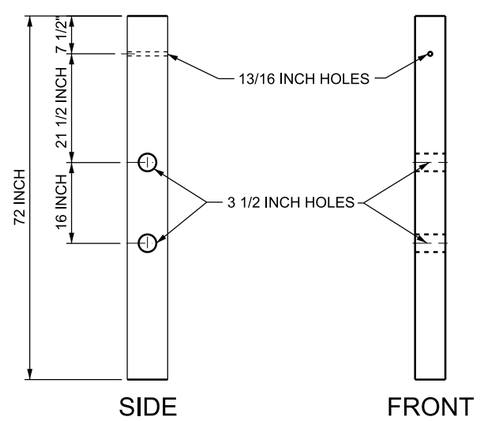

CONTROLLED RELEASE TERMINAL (CRT) POST (PDE09)

SEE NOTE 3

DESIGN-ONLY NOTES:

A. USE THIS INSTALLATION ONLY WHEN RECOVERY AREA CAN BE MAINTAINED. USE A STRONG POST RADIUS INSTALLATION WHEN RECOVERY AREA CANNOT BE MAINTAINED. STRONG POST RADIUS IS CONSTRUCTED WITH MIDWEST 31 INCH W-BEAM GUARDRAIL, SHOP BENT MGS RAIL AND STANDARD MGS GUARDRAIL COMPONENTS AND IS PAID WITH STANDARD MGS GUARDRAIL ITEMS.

B. LIST RADIUS REQUIREMENT FOR EACH LOCATION IN THE PROJECT PLANS AND SUMMARY SHEET.

C. RECOVERY AREA BEHIND THE GUARDRAIL TO BE MAINTAINED FREE OF FIXED OBJECTS AND 2:1 MAXIMUM SLOPE.

D. USE END TREATMENTS, TYPE "G" OR "H" ON INTERSECTING ROADWAYS OPEN TO THE GENERAL PUBLIC AND BARRIER END IS WITHIN THE CLEAR ZONE. USE ANCHOR TYPE II, REFER TO STD DWG BA 4C2 WHEN CONDITIONS OF ANCHORAGE USE ARE MET. USE ANCHOR TYPE I (REFER TO STD DWG BA 4C1, ON BUSINESS/RESIDENTIAL DRIVEWAYS, OR RESTRICTED/LIMITED ENTRY ROADWAYS.

E. DO NOT ATTACH DIRECTLY TO W-BEAM GUARDRAIL TRANSITION, STD DWG BA 4B1 AND 4B2, INSTALL 18 FT 9 INCH OF TYPICAL W-BEAM GUARDRAIL AT END OF TRANSITION PRIOR TO INSTALLING CURVED GUARDRAIL ANCHOR.

F. THE 2 FT MIN BARRIER OFFSET IS OPTIONAL WHEN ROADWAY DESIGN REQUIRES A 12 FT OR WIDER EFFECTIVE SHOULDER.

NOTES:

1. SHOP BEND RADIUS ELEMENTS. FIELD BENDING IS NOT PERMITTED.
2. MAINTAIN 10:1 SLOPE IN FRONT OF CURVED SECTION.
3. MEET REQUIREMENTS OF AASHTO GUIDE TO STANDARDIZED HIGHWAY BARRIER HARDWARE FOR CRT TIMBER POST (PDE09).
4. REFER TO STD DWG BA 4C1 FOR ANCHORAGE COMPONENTS.
5. USE STANDARD G4 GUARDRAIL PANELS WITHIN THE W-BEAM GUARDRAIL CURVED SECTION EXCLUDING THE CURVED GUARDRAIL ANCHOR. SEE STD DWG BA 4F1 FOR STANDARD G4 GUARDRAIL PANELS DETAIL.

REVISIONS

NO.	DATE	APPR.	REMARKS

UTAH DEPARTMENT OF TRANSPORTATION

STANDARD DRAWINGS FOR ROAD AND BRIDGE CONSTRUCTION

SALT LAKE CITY, UTAH

RECOMMENDED FOR APPROVAL — JAN.01, 2017 DATE

CHAIRMAN STANDARDS COMMITTEE APPROVED — JAN.01, 2017 DATE

DEPUTY DIRECTOR

W-BEAM GUARDRAIL CURVE BREAKAWAY DETAILS

STANDARD DRAWING TITLE

STD. DWG. NO.

BA 4G

DGN File: L:\Standard Drawings\Imperial\2017 Approved\1-All Drawings\BA04G.dgn

28-NOV-2016

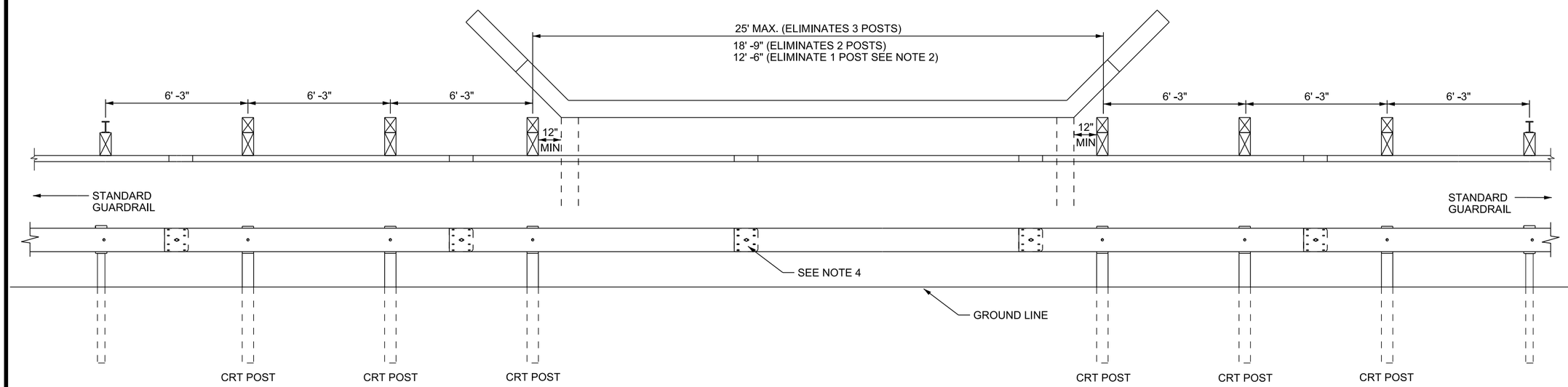

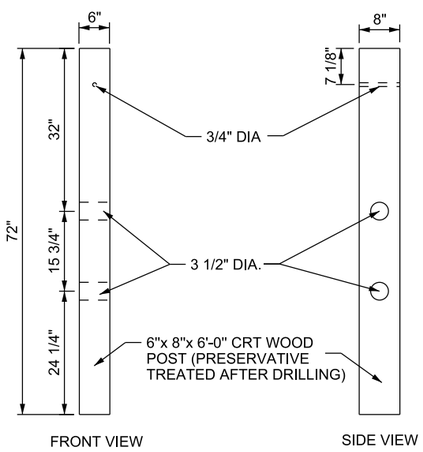

CONTROL RELEASE TERMINAL POST (CRT)

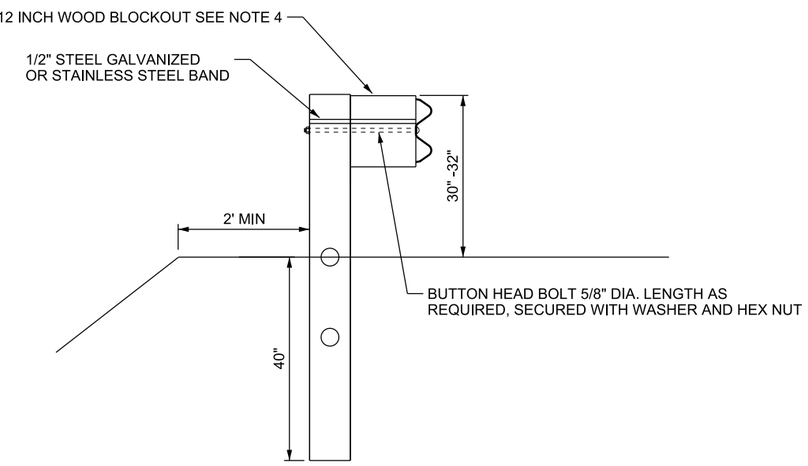

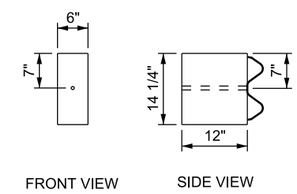

12" BLOCKOUT

NOTES:

1. DO NOT OMIT POSTS WITHIN TERMINALS, TRANSITIONS, POSTS PLACED ON SLOPES, BEHIND CURBS, WITHIN 44 FT FROM THE OUTER CRT POST OF A LONG SPAN, OR WITHIN 62.5 FT FROM THE BEGINNING OR ENDING OF A W-BEAM GUARDRAIL BARRIER RUN.
2. NO SYSTEM CHANGES REQUIRED FOR SINGLE OMITTED POST. LIMITED TO ONE INSTANCE PER 50 FT OF GUARDRAIL LENGTH. MAINTAIN 66 INCHES OFFSET MEASURED FROM BACK OF POST TO FACE OF HAZARD.
3. MAINTAIN 84 INCHES OFFEST MEASURED FROM FACE OF RAIL TO FACE OF HAZARD FOR 2 AND 3 OMITTED POSTS.
4. INSTALL SPLICE BOLTS ONLY WITHIN THE MGS SYSTEM SPLICE JOINT. DO NOT INSTALL CENTER BOLT.
5. USE 12 INCH WOOD BLOCKOUTS ONLY ON CONTROL RELEASE TERMINAL POSTS. COMPOSITE BLOCKS ARE NOT ALLOWED.

REVISIONS

NO.	DATE	APPR.	REMARKS

UTAH DEPARTMENT OF TRANSPORTATION
STANDARD DRAWINGS FOR ROAD AND BRIDGE CONSTRUCTION
SALT LAKE CITY, UTAH

RECOMMENDED FOR APPROVAL — JAN.01.2017 DATE
CHAIRMAN STANDARDS COMMITTEE APPROVED — JAN.01.2017 DATE
DEPUTY DIRECTOR

MIDWEST 31 INCH W-BEAM GUARDRAIL LONG SPAN
STANDARD DRAWING TITLE

STD. DWG. NO.
BA 4H1

28-NOV-2016 DGN File:L:\Standard Drawings\Imperial\2017 Approved\1-All Drawings\BA04H1.dgn

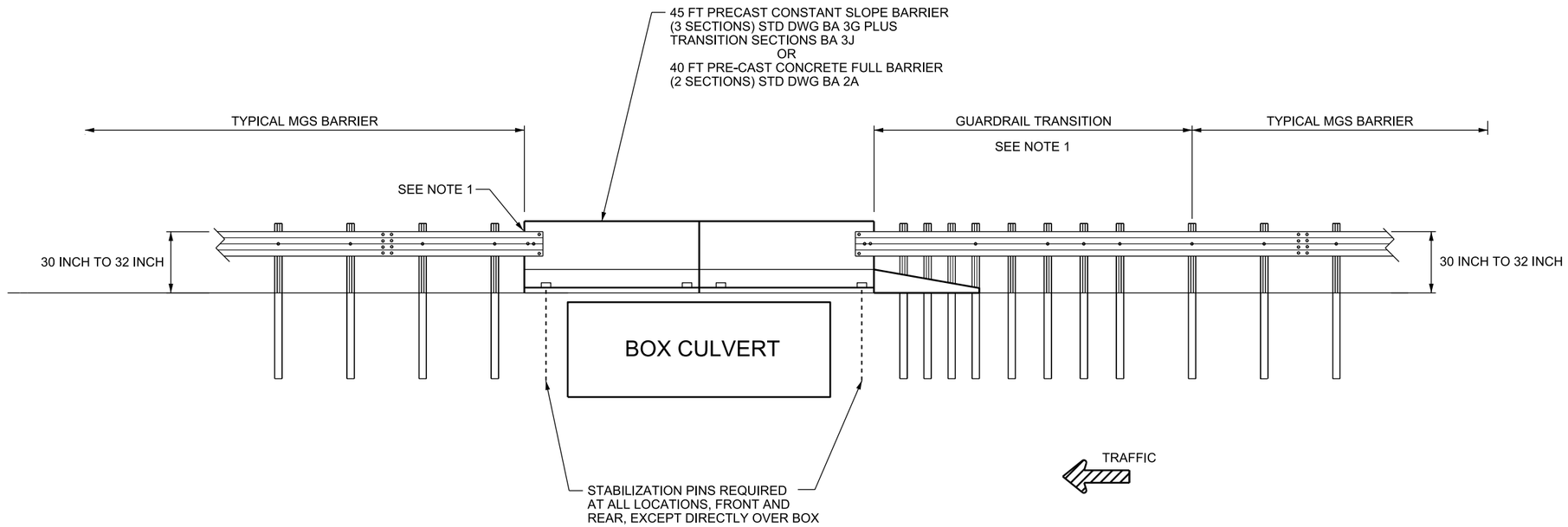

DETAIL A
BOX CULVERT ≥ 25 FT & ≤ 30 FT

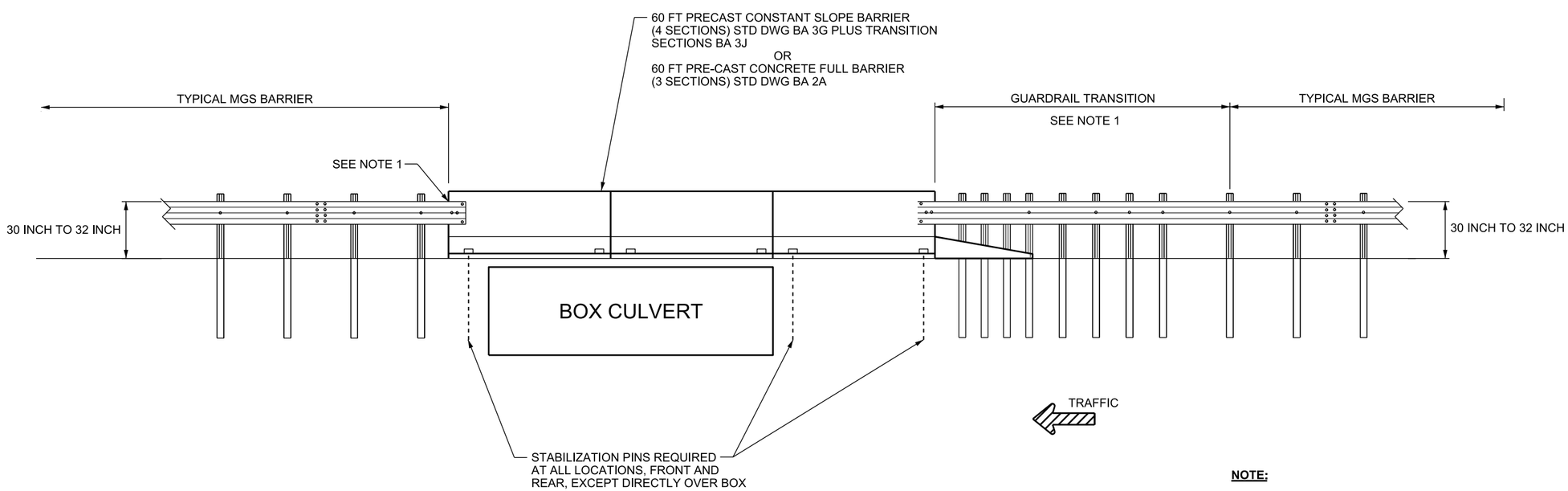

DETAIL B
BOX CULVERT > 30 FT

NOTE:

1. MEET REQUIREMENTS OF STD DWG BA 4B2 FOR APPROACH TRANSISTION AND TRAIL END REQUIREMETNS.

REVISIONS

NO.	DATE	APPR.	REMARKS

UTAH DEPARTMENT OF TRANSPORTATION
STANDARD DRAWINGS FOR ROAD AND BRIDGE CONSTRUCTION
SALT LAKE CITY, UTAH

RECOMMENDED FOR APPROVAL — JAN.01.2017 DATE
CHAIRMAN STANDARDS COMMITTEE APPROVED — JAN.01.2017 DATE
DEPUTY DIRECTOR

STANDARD DRAWING TITLE
31 INCH W-BEAM GUARDRAIL WITH PRECAST BARRIER FOR SPAN ≥ 25 FT

STD. DWG. NO.
BA 4H2

DGN File: L:\Standard Drawings\Imperial\2017 Approved\1-All Drawings\BA04H2.dgn
28-NOV-2016

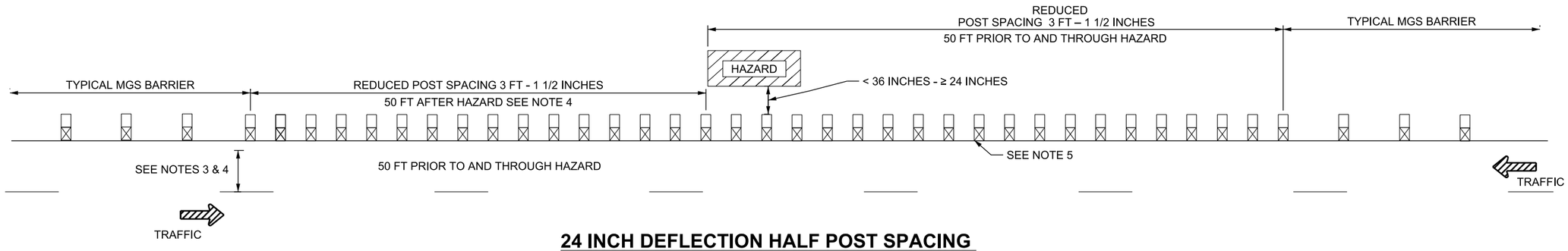

24 INCH DEFLECTION HALF POST SPACING

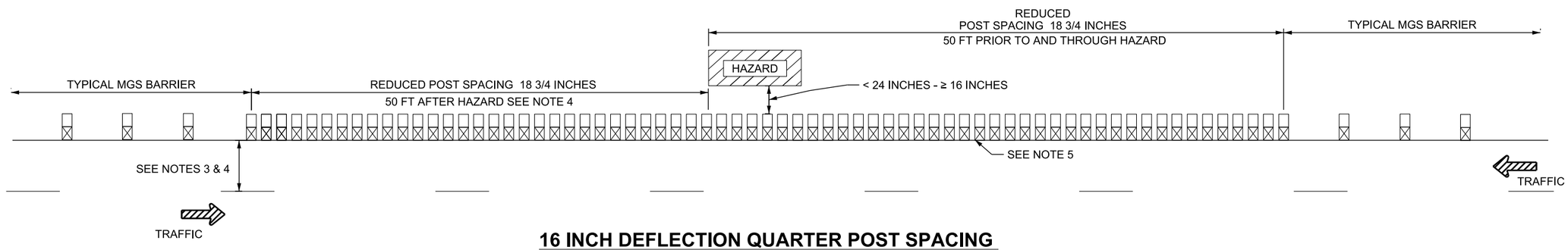

16 INCH DEFLECTION QUARTER POST SPACING

DESIGN-ONLY NOTES:

A. ALTERNATE BARRIER SYSTEM REQUIRED IF DEFLECTION DISTANCE IS LESS THAN 16 INCHES.

B. DO NOT USE WITH INITIAL LONG POST 2:1 FILL SLOPE INSTALLATIONS.

C. INDICATE LOCATIONS ON PLAN SET THAT REQUIRE REDUCED DEFLECTION CRITERIA. SPECIFY DEFLECTION DISTANCE FROM BACK OF POST TO FACE OF HAZARD.

NOTES:

1. USE TYPICAL 8 INCH WOOD OR COMPOSITE BLOCKS.
2. MEASURE DEFLECTION DISTANCE FROM BACK OF POST TO FACE OF HAZARD.
3. STIFFEN AS REQUIRED WHEN USED ON ROADWAYS WITH OPPOSING TRAFFIC AND THE NEAREST APPROACH LANE OF OPPOSING TRAFFIC IS LESS THAN THE MAXIMUM REQUIRED CLEAR ZONE.
4. STIFFENING REQUIRED FOR 25 FT AFTER HAZARD WHEN USED ON ONE-WAY ROADWAYS.
5. BOLTS NOT REQUIRED THROUGH RAIL ELEMENTS FOR THOSE INSTALLATIONS REQUIRING ADDITIONAL POSTS.
6. STIFFENING NOT REQUIRED IF DEFLECTION DISTANCE IS GREATER THAN OR EQUAL TO 38 INCHES FROM BACK OF POST TO FACE OF HAZARD.

7 NOT TO BE USED ON INITIAL LONG POST 2:1 FILL SLOPE INSTALLATION.

NO.	DATE	APPR.	REMARKS

REVISIONS

UTAH DEPARTMENT OF TRANSPORTATION
STANDARD DRAWINGS FOR ROAD AND BRIDGE CONSTRUCTION
SALT LAKE CITY, UTAH

RECOMMENDED FOR APPROVAL — JAN.01.2017 DATE

CHAIRMAN STANDARDS COMMITTEE APPROVED — JAN.01.2017 DATE

DEPUTY DIRECTOR

MIDWEST 31 INCH W-BEAM GUARDRAIL REDUCED DEFLECTION CRITERIA

STANDARD DRAWING TITLE

STD. DWG. NO.

BA 4H3

28-NOV-2016 DGN File:L:\Standard Drawings\Imperial\2017 Approved\1-All Drawings\BA04H3.dgn

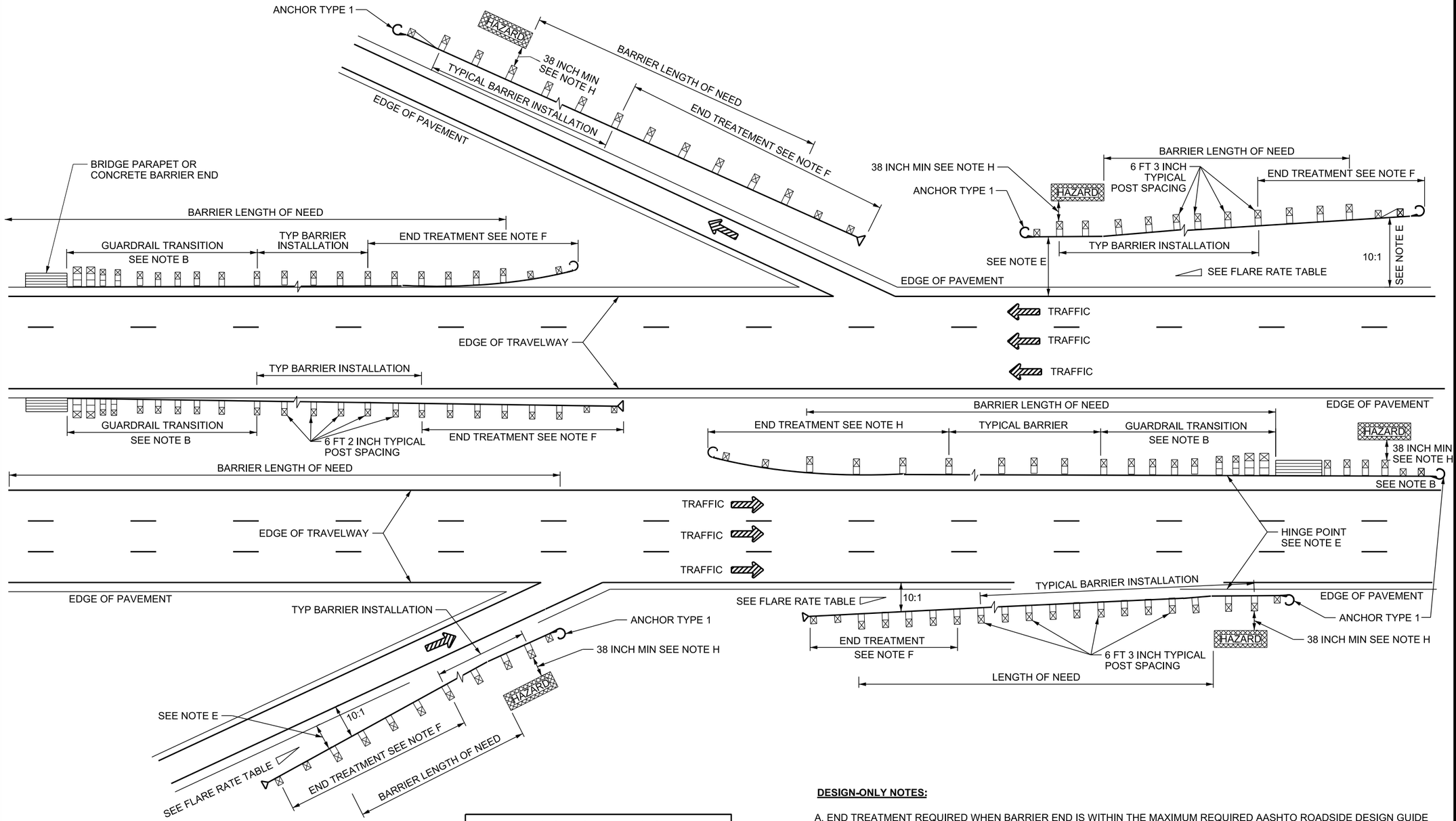

FLARE RATE TABLE		
SPEED (MPH)	RATE OUTSIDE SHY LINE	* RATE INSIDE SHY LINE
≤ 35	7:1	13:1
40	8:1	16:1
45	10:1	18:1
50	11:1	21:1
55	12:1	24:1
60	14:1	26:1
65	15:1	30:1
≤ 70	15:1	30:1

* DESIGN EXCEPTION REQUIRED

DESIGN-ONLY NOTES:

A. END TREATMENT REQUIRED WHEN BARRIER END IS WITHIN THE MAXIMUM REQUIRED AASHTO ROADSIDE DESIGN GUIDE CLEAR ZONE REQUIREMENTS.
B. REFER TO STD DWG BA 4B2 WHEN ATTACHING W-BEAM GUARDRAIL TO THE APPROACH END OR TRAILING END OF CONCRETE BARRIERS OR BRIDGE PARAPETS.
C. CONSIDER USING BURIED TERMINAL END, BA 4F SERIES STD DWG WHEN CONDITIONS PERMIT.
D. USE FLARED GUARDRAIL INSTALLATIONS WHEN POSSIBLE.
E. USES OF MGS W-BEAM GUARDRAIL INSTALLATION PERMITTED ON A SLOPE NO STEEPER THAN 10:1. MATCH ROADWAY CROSS-SLOPE IF SUPER ELEVATED MORE THAN 2 PERCENT. REFER TO BA 4D SERIES STD DWG.
F. END TREATMENTS SHOWN ARE FOR ILLUSTRATION. TYPES G AND H CAN BE USED ON TANGENT OR FLARED GUARDRAIL INSTALLATIONS.
G. CONSULT GUIDELINES FOR CRASH CUSHIONS AND BARRIER END TREATMENTS CC SERIES STD DWGS FOR PROPER END TREATMENT SELECTION AND INSTALLATION REQUIREMENTS.
H. REFER TO STD DWG BA 4H3 FOR REDUCED DEFLECTION REQUIREMENTS WHEN 38 INCHES CANNOT BE MAINTAINED BEHIND W-BEAM GUARDRAIL POST TO FACE OF HAZARD. USE 42 INCHES DEFLECTION FOR INITIAL LONG POST 2:1 FILL SLOPE INSTALLATION WITH STANDARD POST SPACING
I. RECOVERY AREA IS THAT AREA EXTENDING LATERALLY FROM THE APPROACH END OF THE GUARDRAIL TERMINAL TO THE BEGINNING OF THE LENGTH OF NEED AND OUT TO THE DESIGNED CLEAR ZONE. SLOPES IN THE RECOVERY AREA TO BE DETAILED AT THE SAME SLOPE RATE AS REQUIRED BY THE APPLICABLE DD SERIES STD DWG FOR THE ROADWAY TYPE.
J. PLACE NO NON-YIELDING DEVICES INSIDE RECOVERY AREA.
K. PLACE YIELDING DEVICES , SUCH AS SIGN POST, A MINIMUM OF 75 FT BACK FROM HEAD OF END TREATMENT AND OFFSET MINIMUM OF 10 FT FROM BACK OF TYPICAL W-BEAM BARRIER. REFER TO CC SERIES STD DWG FOR PLACEMENT IN FRONT OF END TREATMENT OR CRASH CUSHION.

DESIGN-ONLY DRAWING

REVISIONS

NO.	DATE	APPR.	REMARKS

UTAH DEPARTMENT OF TRANSPORTATION
STANDARD DRAWINGS FOR ROAD AND BRIDGE CONSTRUCTION
SALT LAKE CITY, UTAH

RECOMMENDED FOR APPROVAL — JAN.01.2017 DATE
CHAIRMAN STANDARDS COMMITTEE APPROVED — JAN.01.2017 DATE
DEPUTY DIRECTOR

MIDWEST 31 INCH W-BEAM GUARDRAIL TYPICALS DIVIDED ROADWAYS
STANDARD DRAWING TITLE

STD. DWG. NO.
BA 4J1

28-NOV-2016 DGN File:L:\Standard_Drawings\Imperial\2017 Approved\1-All Drawings\BA04J1.dgn

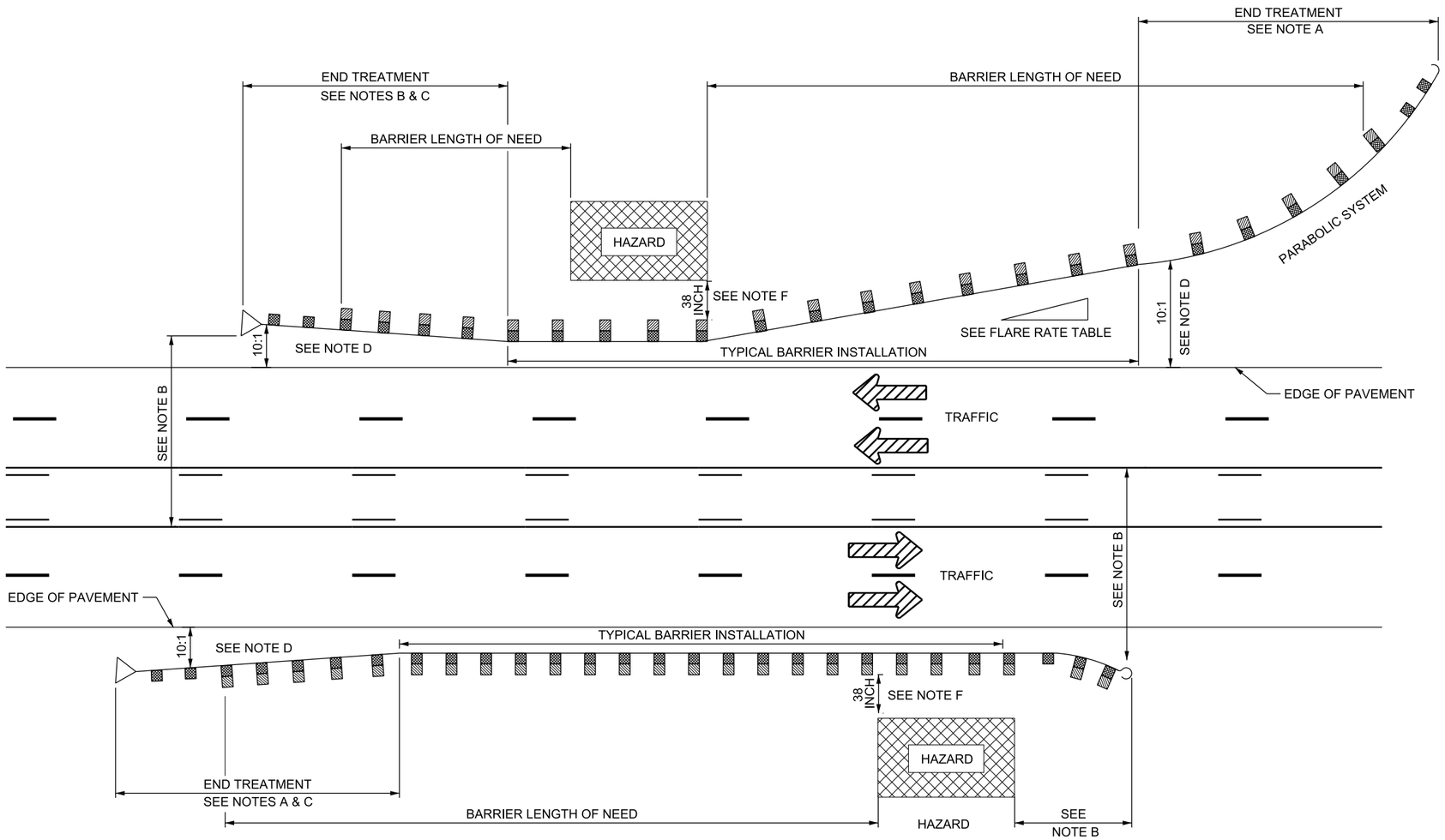

FLARE RATE TABLE		
SPEED (MPH)	RATE OUTSIDE SHY LINE	* RATE INSIDE SHY LINE
≤ 35	7:1	13:1
40	8:1	16:1
45	10:1	18:1
50	11:1	21:1
55	12:1	24:1
60	14:1	26:1
65	15:1	30:1
≤ 70	15:1	30:1

* DESIGN EXCEPTION REQUIRED

DESIGN-ONLY NOTES

A. APPROACH END:
USE AN APPROVED END TREATMENT, AS APPROVED IN THE GUIDELINES FOR CRASH CUSHION AND BARRIER END TREATMENTS OR A BURIED IN BACK SLOPE TERMINAL (BA 4F SERIES STD DWGS).
AN ANCHOR TYPE II CAN BE USED WHEN DESIGN SPEED IS 40 MPH OR LESS.

B. TRAILING END:
1. USE AN END TREATMENT AS APPROVED IN GUIDELINES FOR CRASH CUSHION AND BARRIER END TREATMENTS OR A BURIED IN BACK SLOPE TERMINAL WITHIN CLEAR ZONE AS DEFINED IN STD DWG DD 18 AND AASHTO ROADSIDE DESIGN GUIDE.
2. USE AN ANCHOR TYPE II, STD DWG BA 4C2 AT OR BEYOND MINIMUM CLEAR ZONE AS DEFINED IN STD DWG DD 18 AND AASHTO ROADSIDE DESIGN GUIDE.

C. END TREATMENT SHOWN ARE FOR ILLUSTRATION. TYPES G AND H CAN BE USED ON TANGENT OR FLARED GUARDRAIL INSTALLATIONS.

D. USES OF MGS W-BEAM GUARDRAIL INSTALLATION PERMITTED ON A SLOPE NO STEEPER THAN 10:1. MATCH ROADWAY CROSS-SLOPE IF SUPERELEVATED MORE THAN 2 PERCENT. REFER TO BA 4D SERIES STD DWG.

E. CONSULT GUIDELINES FOR CRASH CUSHIONS AND BARRIER END TREATMENTS, CC SERIES STD DWGS FOR PROPER END TREATMENT SELECTION AND INSTALLATION REQUIREMENTS.

F. REFER TO STD DWG BA 4H3 FOR REDUCED DEFLECTION REQUIREMENTS WHEN 38 INCHES CANNOT BE MAINTAINED BEHIND W-BEAM GUARDRAIL POST TO FACE OF HAZARD. USE 42 INCHES DEFLECTION FOR INITIAL LONG POST 2:1 FILL SLOPE INSTALLATION WITH STANDARD POST SPACING.

DESIGN-ONLY DRAWING

REVISIONS

NO.	DATE	APPR.	REMARKS

UTAH DEPARTMENT OF TRANSPORTATION
STANDARD DRAWINGS FOR ROAD AND BRIDGE CONSTRUCTION
SALT LAKE CITY, UTAH

RECOMMENDED FOR APPROVAL — JAN.01.2017 DATE
CHAIRMAN STANDARDS COMMITTEE APPROVED — JAN.01.2017 DATE
DEPUTY DIRECTOR

MIDWEST 31 INCH W-BEAM GUARDRAIL TYPICAL MULTILANE ARTERIAL
STANDARD DRAWING TITLE

STD. DWG. NO.
BA 4J2

DGN File: L:\Standard_Drawings\Imperial\2017 Approved\1-All Drawings\BA04J2.dgn
28-NOV-2016

FLARE RATE TABLE		
SPEED (MPH)	RATE OUTSIDE SHY LINE	* RATE INSIDE SHY LINE
≤ 35	7:1	13:1
40	8:1	16:1
45	10:1	18:1
50	11:1	21:1
55	12:1	24:1
60	14:1	26:1
65	15:1	30:1
≤ 70	15:1	30:1

* DESIGN EXCEPTION REQUIRED

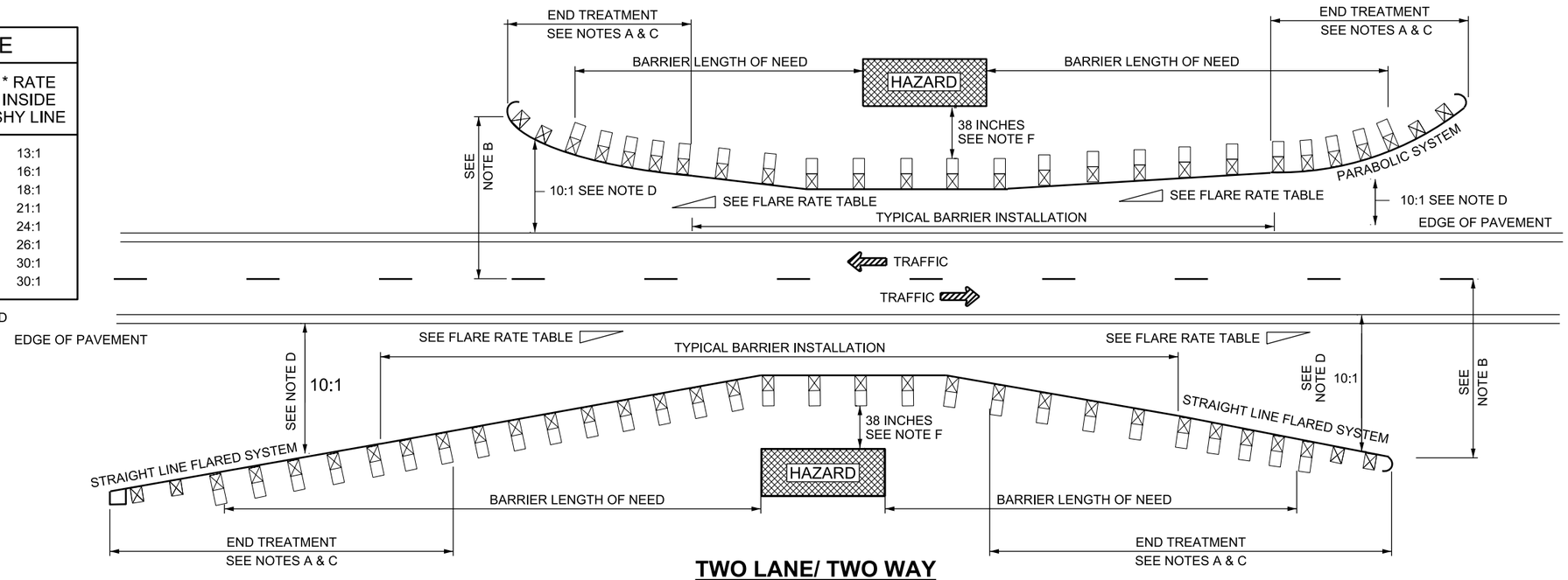

TWO LANE/ TWO WAY FLARED GUARDRAIL INSTALLATION

(DETAIL BA 4J3-2)

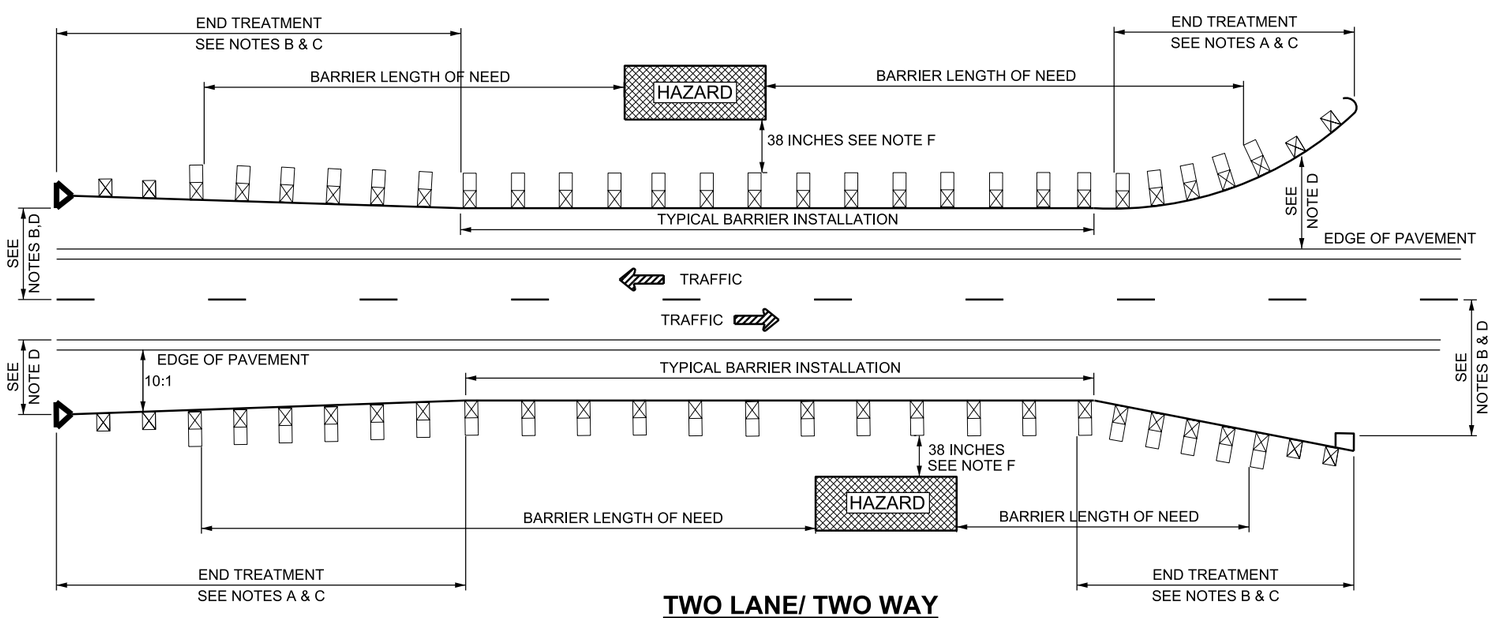

TWO LANE/ TWO WAY TANGENT GUARDRAIL INSTALLATION

(DETAIL BA 4J3-1)

DESIGN-ONLY NOTES

A. APPROACH END:
USE AN APPROVED END TREATMENT, AS APPROVED IN THE GUIDELINES FOR CRASH CUSHION AND BARRIER END TREATMENTS OR A BURIED IN BACK SLOPE TERMINAL (BA 4F SERIES STD DWGS). AN ANCHOR TYPE II PERMITTED WHEN DESIGN SPEED IS 40 MPH OR LESS.

B. TRAILING END:

1. USE AN END TREATMENT AS APPROVED IN GUIDELINES FOR CRASH CUSHION AND BARRIER END TREATMENTS CURRENT EDITION, OR A BURIED IN BACK SLOPE TERMINAL WITHIN CLEAR ZONE AS DEFINED IN STD DWG DD 18 AND AASHTO ROADSIDE DESIGN GUIDE.
2. USE AN ANCHOR TYPE II, STD DWG BA 4C2.AT OR BEYOND MINIMUM CLEAR ZONE AS DEFINED IN STD DWG DD 18 AND AASHTO ROADSIDE DESIGN GUIDE

C. END TREATMENTS SHOWN ARE FOR ILLUSTRATION. TYPES "G" AND "H" CAN BE USED ON TANGENT OR FLARED GUARDRAIL INSTALLATIONS.

D. USES OF MGS W-BEAM GUARDRAIL INSTALLATION PERMITTED ON A SLOPE NO STEEPER THAN 10:1. MATCH ROADWAY CROSS-SLOPE IF SUPERELEVATED MORE THAN 2 PERCENT. REFER TO STD DWG BA 4D SERIES.

E. CONSULT GUIDELINES FOR CRASH CUSHIONS AND END TREATMENTS CC SERIES STANDARD DRAWINGS, FOR PROPER END TREATMENT SELECTION AND INSTALLATION REQUIREMENTS.

F. REFER TO STD DWG 4H3 FOR REDUCED DEFLECTION REQUIREMENTS WHEN 38 INCHES CANNOT BE MAINTAINED BEHIND W-BEAM GUARDRAIL POST TO FACE OF HAZARD. USE 42 INCHES DEFLECTION FOR INITIAL LONG POST 2:1 FILL SLOPE INSTALLATION WITH STANDARD POST SPACING.

DESIGN-ONLY DRAWING

REVISIONS

NO.	DATE	APPR.	REMARKS

UTAH DEPARTMENT OF TRANSPORTATION
STANDARD DRAWINGS FOR ROAD AND BRIDGE CONSTRUCTION
SALT LAKE CITY, UTAH

RECOMMENDED FOR APPROVAL — JAN.01.2017 DATE
CHAIRMAN STANDARDS COMMITTEE APPROVED — JAN.01.2017 DATE
DEPUTY DIRECTOR

MIDWEST 31 INCH W-BEAM GUARDRAIL TYPICAL 2 LANE 2 WAY
STANDARD DRAWING TITLE

STD. DWG. NO.
BA 4J3

DGN File: L:\Standard Drawings\Imperial\2017 Approved\1-All Drawings\BA04J3.dgn
28-NOV-2016

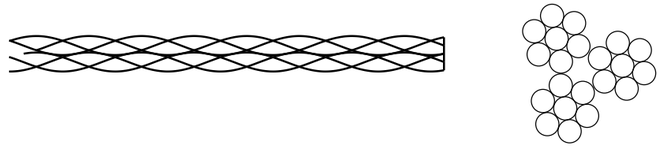

GALVANIZED WIRE ROPE 3/4 INCH 3 X 7 CONSTRUCTION

SEE NOTES 1 & 2

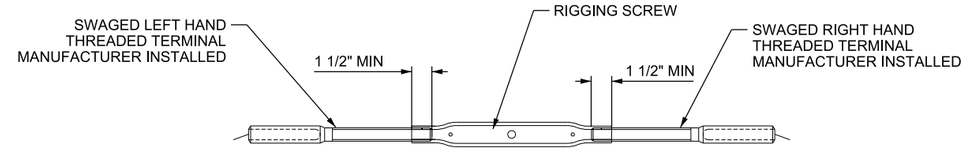

BRIFEN CONNECTION SHOWN, OTHER SYSTEMS SIMILAR.

WIRE ROPE CONNECTION DETAIL

SEE NOTE 3

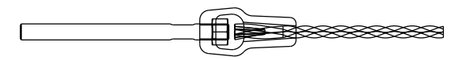

TRINITY CONNECTION SHOWN, OTHER SYSTEMS SIMILAR.

WIRE ROPE FIELD SPLICE CONNECTION

SEE NOTE 4

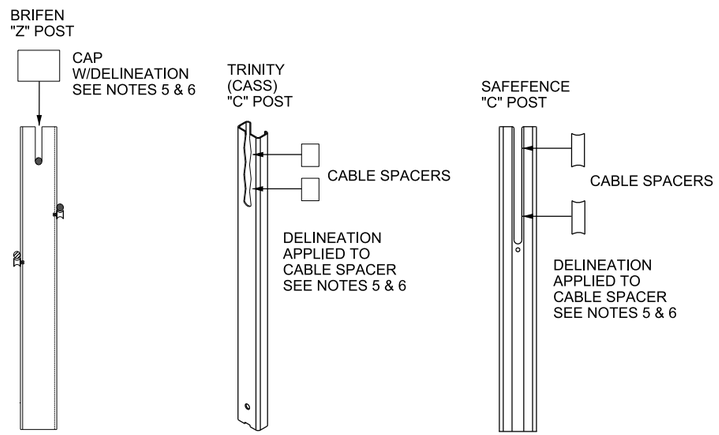

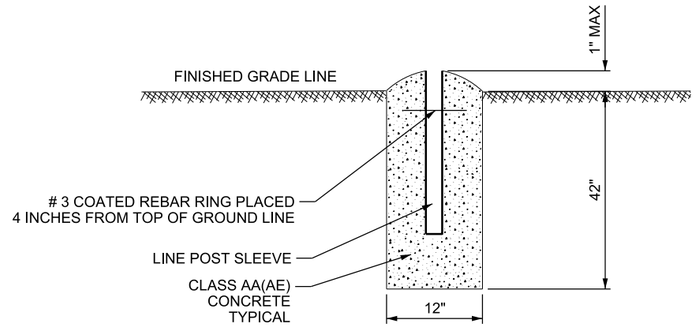

LINE POST FOUNDATION ON SLOPES 10:1 OR FLATTER

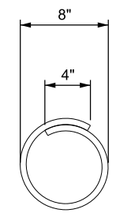

3 COATED REBAR RING

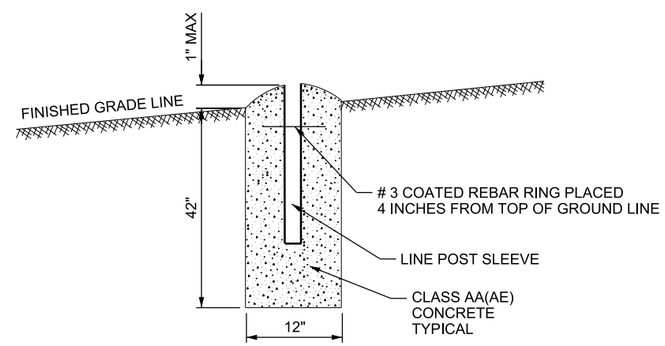

LINE POST FOUNDATION ON SLOPES BETWEEN 6:1 AND 10:1

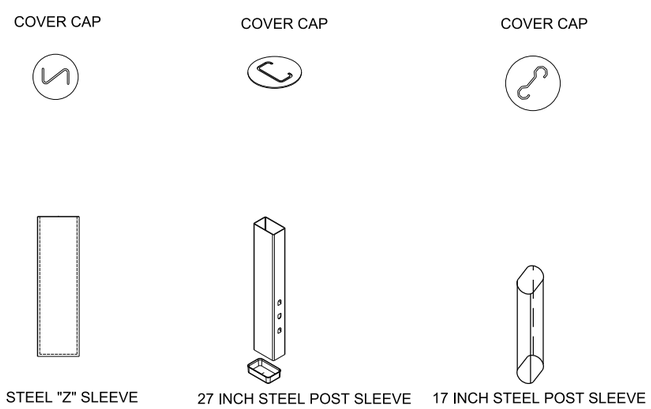

LINE POSTS, SLEEVES AND HARDWARE

SEE NOTE 1

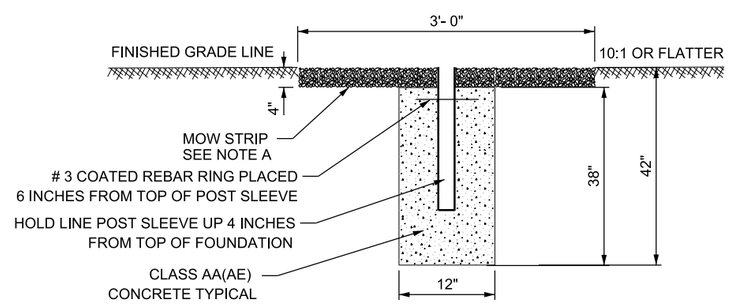

LINE POST FOUNDATION WITH MOW STRIP ON SLOPES 10:1 OR FLATTER

FOUNDATION REQUIREMENTS FOR LINE
POST APPLIES TO ALL SYSTEMS

DESIGN-ONLY NOTES

A. CONSTRUCT MOW STRIP WITH BITUMINOUS OR CONCRETE MATERIAL.

NOTES

1. ALL SYSTEMS ARE PROPRIETARY. MEET UDOT AND MANUFACTURER'S REQUIREMENTS.

2. WIRE ROPE:
   A. AASHTO DESIGNATION M 30/ ASTM A 741-98, TYPE 1, CLASS A COATING.
   B. MODIFIED BREAKING STRENGTH MINIMUM 39,000 LB.
   C. PRE-STRETCH MINIMUM WIRE ROPE TO A MODULUS OF ELASTICITY OF 19,000,000- PSI IN ACCORDANCE WITH ISO 12076-202, WIRE ROPE MODULUS OF ELASTICITY, NO BENDING OR PRE-STRETCHING OF THE ROPE PERMITTED DURING TESTING.
   D. FACTORY FIT CABLE ENDS WITH 1 INCH DIA. THREADED ENDS, RIGHT HAND THREAD ONE END, LEFT HAND THREAD ON OPPOSITE END.

3. WIRE ROPE CONNECTION:
   A. USED TO SPLICE TWO CABLE ENDS TOGETHER
   B. USE 1 INCH DIA CONNECTION AS SPECIFIED BY MANUFACTURER.

4. WIRE ROPE FIELD SPLICE:
   A. USED TO SPLICE TWO FIELD CUT CABLE ENDS TOGETHER.
   B. USE 1 INCH DIA FIELD SPLICE CONNECTIONS AS SPECIFIED BY MANUFACTURER.

5. MEET DELINEATION REQUIREMENTS ACCORDING TO STANDARD SPECIFICATION 02845.

6. INSTALL CABLE SPACERS, IF REQUIRED, ACCORDING TO MANUFACTURER'S REQUIREMENTS. INSTALLATION OF DELINEATION ON SPACERS IS ACCEPTABLE.

7. MEET MANUFACTURER'S REQUIREMENT FOR CABLE HEIGHT THROUGHOUT THE ENTIRE RUN.

8. GALVANIZE CABLE, POSTS AND HARDWARE.

REVISIONS

NO.	DATE	APPR.	REMARKS

UTAH DEPARTMENT OF TRANSPORTATION
STANDARD DRAWINGS FOR ROAD AND BRIDGE CONSTRUCTION
SALT LAKE CITY, UTAH

RECOMMENDED FOR APPROVAL — JAN 01, 2017 DATE
CHAIRMAN STANDARDS COMMITTEE APPROVED — JAN 01, 2017 DATE
DEPUTY DIRECTOR

CABLE BARRIER
TYPICAL HARDWARE
AND FOUNDATION
REQUIREMENTS

STANDARD DRAWING TITLE

STD. DWG. NO.
BA 5A

DGN File:L:\Standard Drawings\Imperial\2017 Approved\1-All Drawings\BA05A.dgn
28-NOV-2016

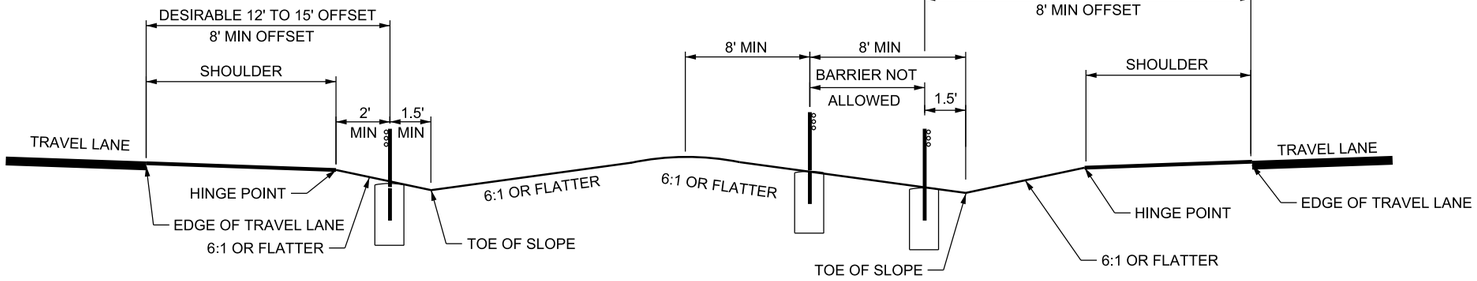

PLACEMENT PRIOR TO TOE OF SLOPE

PLACEMENT BEYOND TOE OF SLOPE

MEDIAN PLACEMENT WITH BACKSLOPES 6:1 OR FLATTER

SEE NOTES A & C

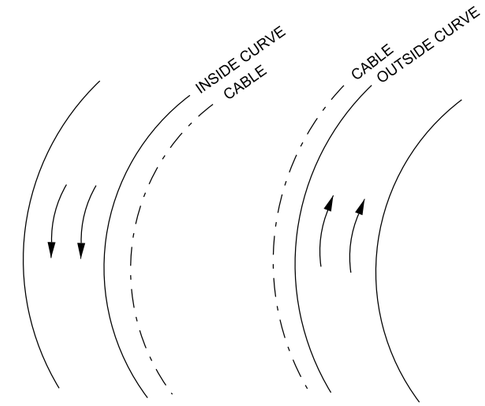

CABLE PLACEMENT ON CURVES

SEE NOTES C & 3

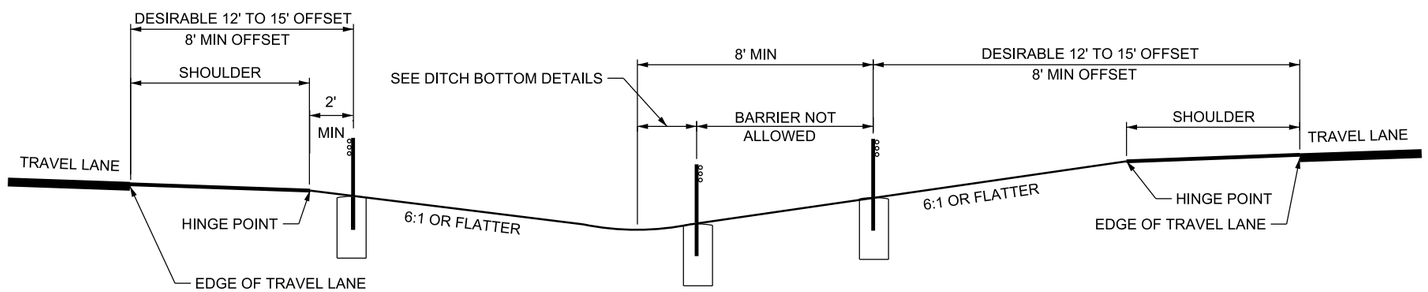

PLACEMENT IN RELATION TO SHOULDER HINGE POINT

PLACEMENT IN RELATION TO DITCH BOTTOM

MEDIAN PLACEMENT WITH FORESLOPE 6:1 OR FLATTER

SEE NOTES A & C

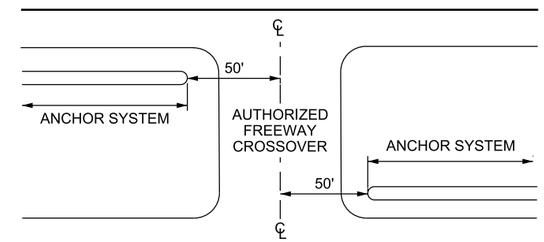

TURNAROUND DETAIL

SEE NOTE 6

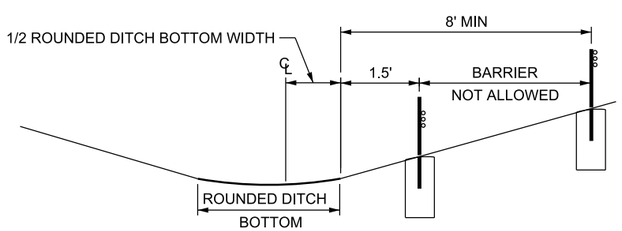

MEDIAN WITH ROUNDED DITCH BOTTOM

SEE NOTE 7

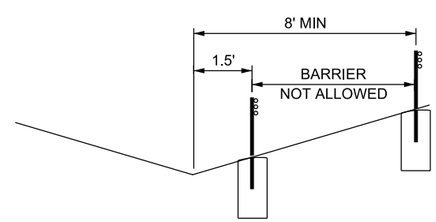

MEDIAN WITH V-DITCH BOTTOM

SEE NOTE 7

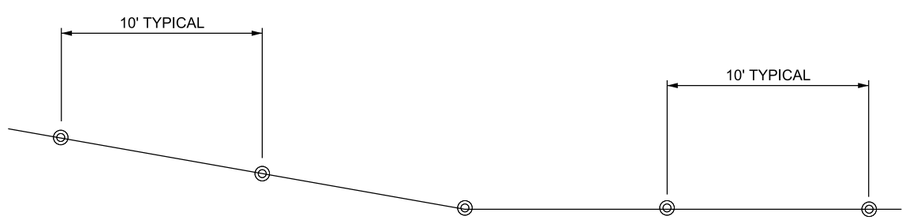

TYPICAL POST SPACING

SEE NOTES 1, 2, & 8

DESIGN-ONLY NOTES:

A. PLACE CABLE 12 FT TO 15 FT FROM EDGE OF TRAVEL LANE UNLESS THE 8 FT MIN OFF SET FROM DITCH BOTTOM IS NOT OBTAINED; OTHERWISE, PLACE CABLE 1.5 FT OFFSET FROM DITCH BOTTOM OR 8 FT OFFSET FROM EDGE OF TRAVEL LANE THROUGH THE REGION TRAFFIC ENGINEER'S APPROVAL.

B. DETAILS DEPICT MAIN RUNS OF CABLE BARRIER. SEE STD DWG BA 5C1 ANCHOR DETAILS FOR PLACEMENT OF ANCHOR SYSTEMS.

C. DO NOT USE IN MEDIANS LESS THAN 15 FT WIDE MEASURED FROM EDGE OF TRAVEL LANE TO EDGE OF TRAVEL LANE.

NOTES:

1. FLARE RATE: FLATTER OR EQUAL TO 30:1 DESIRABLE, 20:1 MINIMUM ACCEPTABLE.

2. REDUCE POST SPACING TO 5 FT ON CENTER WHEN MEDIAN WIDTH IS 20 FT OR WHEN PLACED ON THE INSIDE OF A CURVE AND THE OFFSET IS SUCH THAT THE CABLE HAS A POTENTIAL OF ENCROACHMENT INTO TRAVEL LANE AND MEDIAN WIDTH IS NOT LESS THAN 15 FT.

3. CABLE PLACEMENT ON CURVES:
   A. PLACE CABLE ON INSIDE CURVE WHEN PRACTICAL.
   B. USE POST SPACING OF 5 FT ON INSIDE CURVE WITH A RADIUS BETWEEN 650 FT AND 2,500 FT.
   C. PLACEMENT ON THE OUTSIDE OF CURVE NOT DESIRABLE. MAINTAIN SUFFICIENT OFFSET, WITH 10 FT POST SPACING SO THE CABLE DOES NOT ENCROACH INTO TRAVEL LANE AFTER IMPACT WHEN SITUATION REQUIRES PLACEMENT ON THE OUTSIDE OF CURVE. REDUCE POST SPACING TO 5 FT WHEN SUFFICIENT OFFSET CANNOT BE PROVIDED.
   D. REFER TO PLAN SET FOR OFFSET REQUIREMENTS.

4. REMOVE DELINEATOR POST WHEN WITHIN 4 FT OF FACE OF CABLE BARRIER. FACE IS DEFINED AS THE CABLE TO THE NEAREST TRAVEL LANE.

5. DELINEATOR POSTS NOT REQUIRED WHEN CABLE BARRIER IS PLACED WITHIN THE OFFSET REQUIREMENTS OF STD DWG GW 10.
   A. PLACE 2 FT BEHIND CABLE BARRIER WHEN DELINEATOR POSTS ARE DESIRABLE.

6. PLACE 50 FT FROM CROSSOVER CENTERLINE REQUIRED WHEN ANCHOR SYSTEMS ARE PLACED IN A OFFSET OR IN LINE APPLICATION.

7. PLACE BARRIER WITH A 1.5 FT OFFSET FROM DITCH BOTTOM OR PLACED AT 8 FT FROM DITCH BOTTOM.

8. DO NOT USE ADDITIONAL POSTS TO AVOID SPOT HAZARDS FOR SPANS GREATER THAN 10 FT BUT LESS THAN 15 FT. SEE BA 5J2 FOR SPANS 15 FT OR GREATER.

REVISIONS

NO.	DATE	APPR.	REMARKS

UTAH DEPARTMENT OF TRANSPORTATION
STANDARD DRAWINGS FOR ROAD AND BRIDGE CONSTRUCTION
SALT LAKE CITY, UTAH

RECOMMENDED FOR APPROVAL — JAN 01, 2017 DATE
CHAIRMAN STANDARDS COMMITTEE APPROVED — JAN 01, 2017 DATE
DEPUTY DIRECTOR

CABLE BARRIER PLACEMENT

STANDARD DRAWING TITLE

STD. DWG. NO.
BA 5B1

DGN File:L:\Standard_Drawings\Imperial\2017 Approved\1-All Drawings\BA05B1.dgn
28-NOV-2016

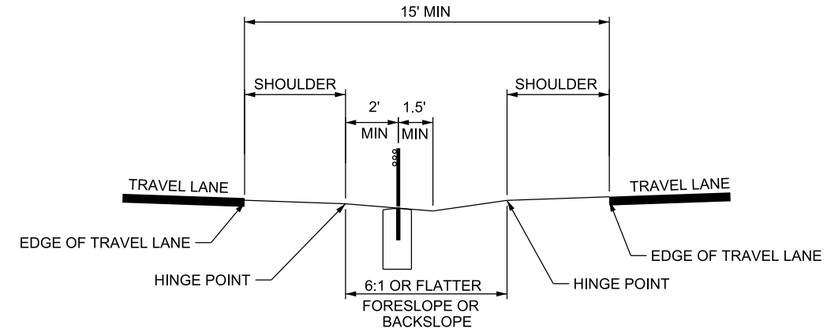

NARROW MEDIAN PLACEMENT

SEE NOTES A, C, & 3

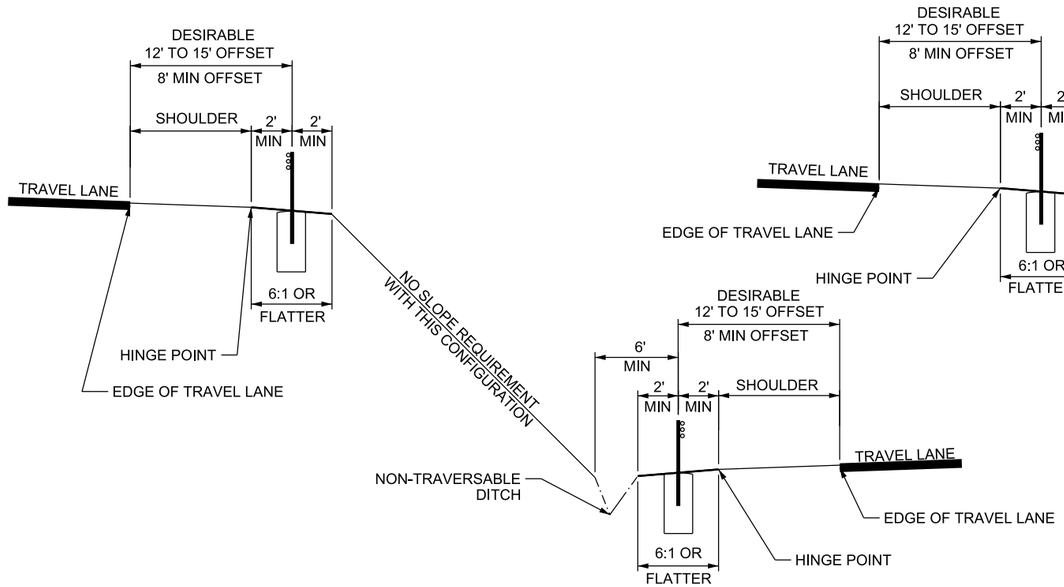

MEDIAN PLACEMENT WITH VERTICALLY OFFSET LANES WITH DITCH

NOTE C DOES NOT APPLY

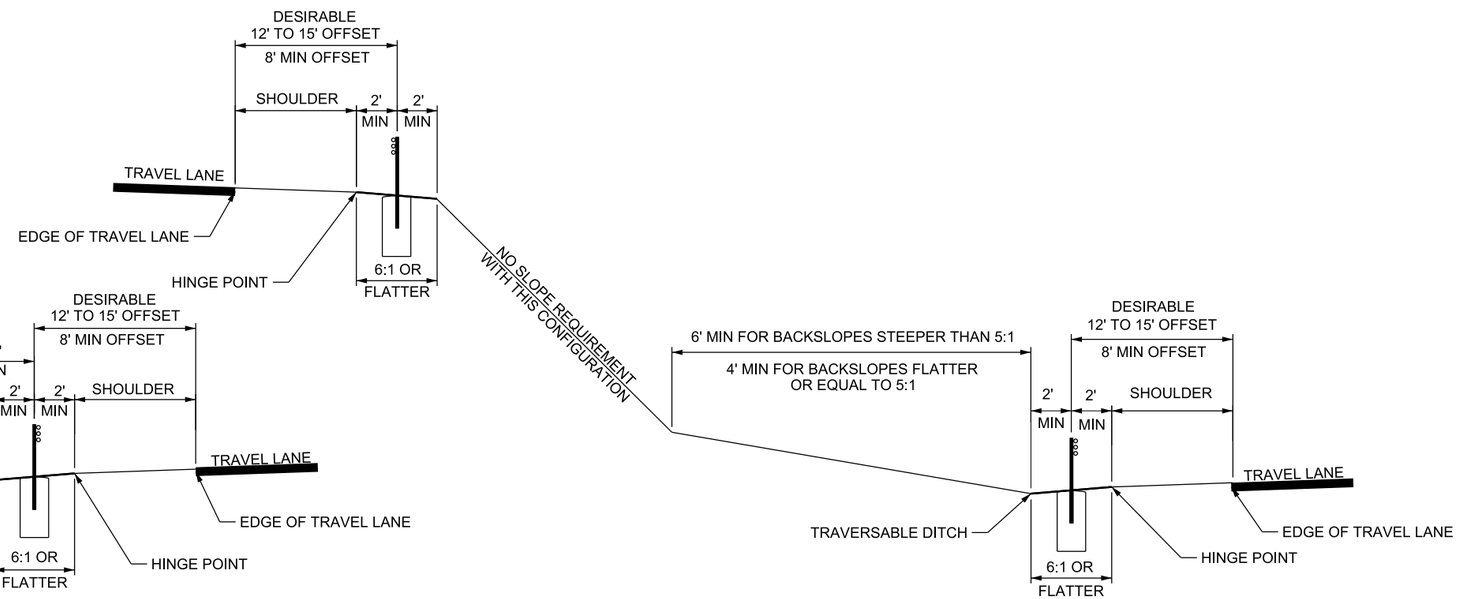

MEDIAN PLACEMENT WITH VERTICALLY OFFSET LANES WITH NO DITCH

NOTE C DOES NOT APPLY

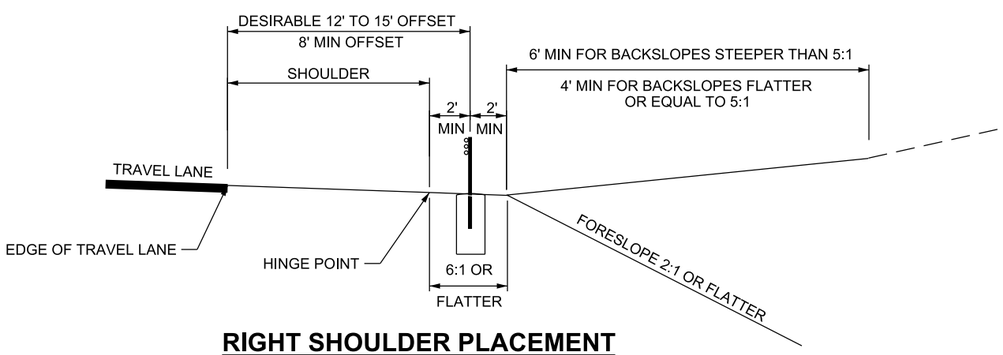

RIGHT SHOULDER PLACEMENT

NOTE C DOES NOT APPLY

DESIGN-ONLY NOTES:

A. PLACE CABLE 12 FT TO 15 FT FROM EDGE OF TRAVEL LANE UNLESS THE 8 FT MIN OFF SET FROM DITCH BOTTOM IS NOT OBTAINED; OTHERWISE, PLACE CABLE 1.5 FT OFFSET FROM DITCH BOTTOM OR 8 FT OFFSET FROM EDGE OF TRAVEL LANE THROUGH THE REGION TRAFFIC ENGINEER'S APPROVAL.

B. DETAILS DEPICT MAIN RUNS OF CABLE BARRIER. SEE ANCHOR DETAILS FOR PLACEMENT OF ANCHOR SYSTEMS.

C. DO NOT USE IN MEDIANS LESS THAN 15 FT WIDE MEASURED FROM EDGE OF TRAVEL LANE TO EDGE OF TRAVEL LANE.

NOTES:

1. FLARE RATE: FLATTER OR EQUAL TO 30:1 DESIRABLE, 20:1 MINIMUM ACCEPTABLE.
2. SEE STD DWG BA 5B1 FOR TYPICAL POST SPACING REQUIREMENTS.
3. USE 5 FT POST SPACING WHEN:
   A. MEDIAN WIDTH IS GREATER THAN 15 FT BUT LESS THAN 20 FT.
   B. CABLE IS OFFSET LESS THAN 8 FT FROM ANY TRAVEL LANE.
4. REFER TO THE ROADSIDE DESIGN GUIDE CHAPTER 6 FOR DETERMINING THE PLACEMENT OF BARRIER IN NON- LEVEL MEDIANS. SEE DD SERIES STD DWGS FOR MEDIAN AND SHOULDER SLOPE REQUIREMENTS.

NO.	DATE	APPR.	REMARKS

REVISIONS

UTAH DEPARTMENT OF TRANSPORTATION
STANDARD DRAWINGS FOR ROAD AND BRIDGE CONSTRUCTION
SALT LAKE CITY, UTAH

RECOMMENDED FOR APPROVAL — JAN 01, 2017 DATE
CHAIRMAN STANDARDS COMMITTEE APPROVED — JAN 01, 2017 DATE
DEPUTY DIRECTOR

CABLE BARRIER PLACEMENT

STANDARD DRAWING TITLE

STD. DWG. NO.
BA 5B2

28-NOV-2016 DGN File: L:\Standard_Drawings\Imperial\2017 Approved\1-All Drawings\BA05B2.dgn

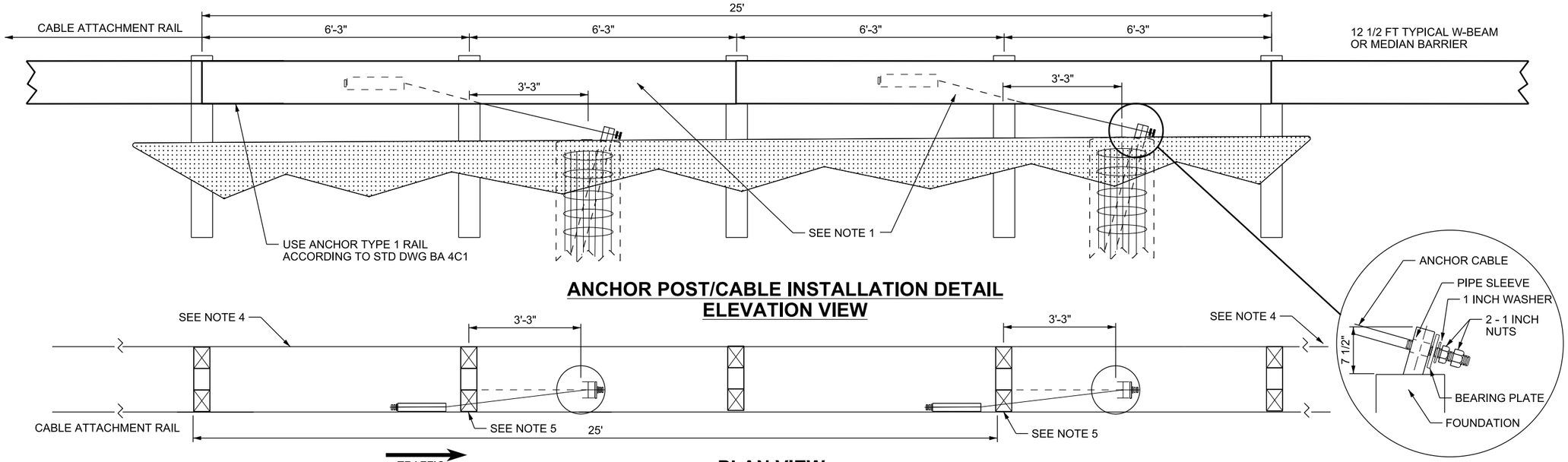

ANCHOR POST/CABLE INSTALLATION DETAIL
ELEVATION VIEW

PLAN VIEW

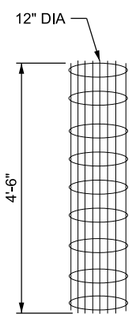

REINFORCEMENT CAGE

8- # 6 VERTICAL BARS 4 FT - 6 INCH
9- # 3 RINGS 12 INCH DIAMETER

USE COATED BAR

EQUALLY SPACE VERTICAL BARS INSIDE RINGS.
EQUALLY SPACE RINGS ALONG VERTICAL BARS.
SECURE VERTICAL BARS TO RINGS.

USE OF SPIRAL CAGE PERMITTED. USE #3 BAR TO CONSTRUCT SPIRAL CAGE. CONSTRUCT CAGE 4 FT - 6 INCH TALL USING 6 INCH PITCH WITH ONE FLAT TURN ON TOP AND BOTTOM. SECURE INSIDE CAGE 8 - # 6 VERTICAL BARS 4 FT - 6 INCH SPACED EVENLY INSIDE AND AROUND SPIRAL CAGE.

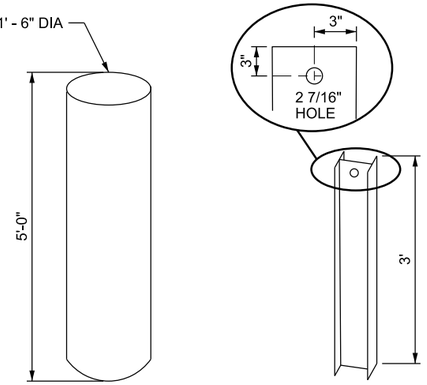

FOOTING REQUIREMENTS

1 FT - 6 INCH x 5 FT - 0 INCH
CONCRETE CLASS AA(AE)
CONCRETE 4000 PSI

ALLOW CONCRETE TO CURE PRIOR TO TENSIONING CABLE

ANCHOR POST

W6 x 15
GALVANIZED POST

DRILL 2 7/16 INCH HOLE PRIOR TO GALVANIZING

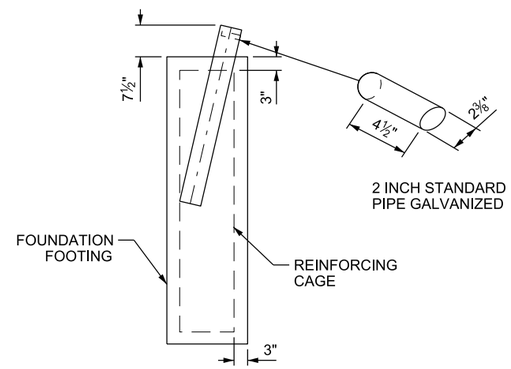

ANCHOR POST PLACEMENT IN FOOTING

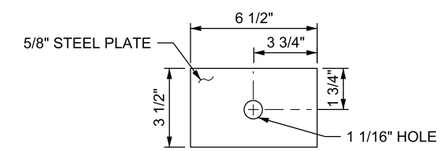

GALVANIZED BEARING PLATE

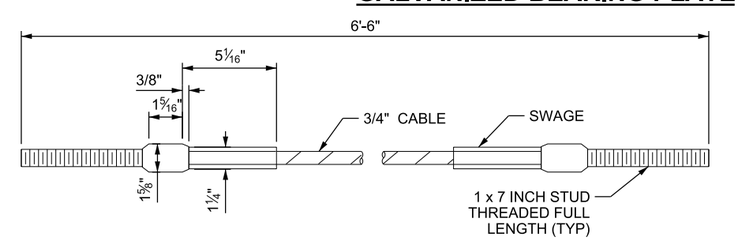

GALVANIZED BCT CABLE ANCHOR ASSEMBLY

SEE NOTE 3

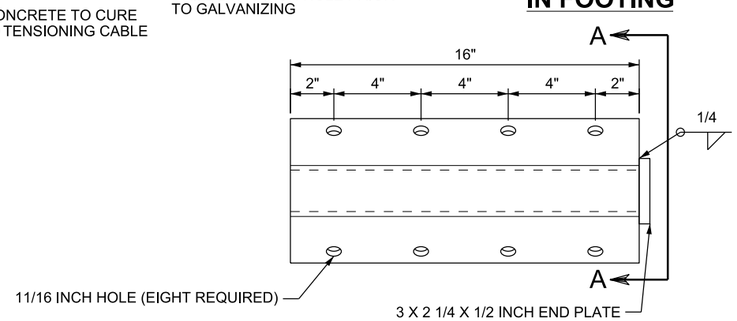

GALVANIZED GUARDRAIL ANCHOR BRACKET

SEE NOTE 2

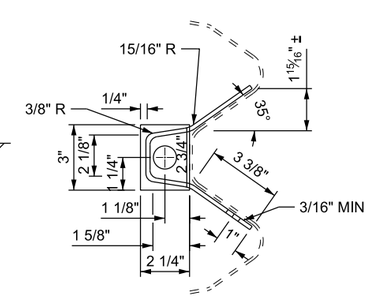

SECTION A-A

NOTES:

1. TWO REQUIRED - ANCHOR TYPE 1 RAIL PANELS SEE STD DWG BA 4 SERIES.
2. TWO REQUIRED - GUARDRAIL ANCHOR BRACKETS AND HARDWARE. REFER TO AASHTO GUIDE TO STANDARDIZED HIGHWAY BARRIER HARDWARE, DWG NO FPA01.
3. TWO REQUIRED - BCT CABLE ANCHOR ASSEMBLY AND HARDWARE: REFER TO AASHTO GUIDE TO STANDARDIZED HIGHWAY BARRIER HARDWARE DWG NO FCA01.
4. INSTALL BACKSIDE BLOCK AND RAIL ELEMENTS ON CABLE/W-BEAM ANCHOR ASSEMBLY WHEN USED IN MEDIAN APPLICATION AND WITHIN THE MAXIMUM REQUIRED CLEAR ZONE.
5. MODIFY BLOCKOUT TO ALLOW ANCHOR CABLE TO PASS UNDERNEATH BETWEEN RAIL ATTACHMENT AND ANCHOR POST.
6. ALL COMPONENTS OF THIS ASSEMBLY ARE REQUIRED AND ARE A SINGLE PAY ITEM.

REVISIONS

NO.	DATE	APPR.	REMARKS

UTAH DEPARTMENT OF TRANSPORTATION
STANDARD DRAWINGS FOR ROAD AND BRIDGE CONSTRUCTION
SALT LAKE CITY, UTAH

RECOMMENDED FOR APPROVAL — JAN 01, 2017 DATE
CHAIRMAN STANDARDS COMMITTEE APPROVED — JAN 01, 2017 DATE
DEPUTY DIRECTOR

CABLE BARRIER W-BEAM ANCHOR ASSEMBLY
STANDARD DRAWING TITLE

STD. DWG. NO.
BA 5C1

DGN File: L:\Standard Drawings\Imperial\2017 Approved\1-All Drawings\BA05C1.dgn
28-NOV-2016

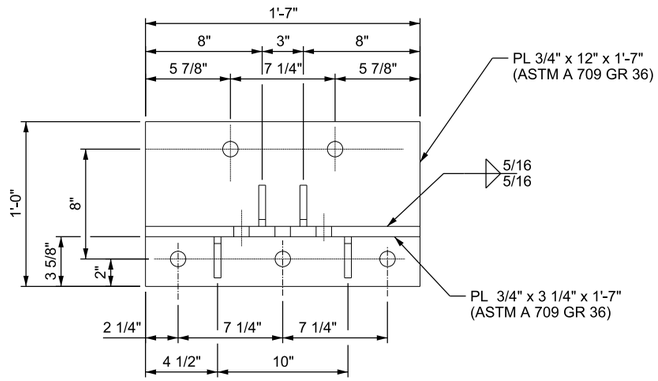

ELEVATION

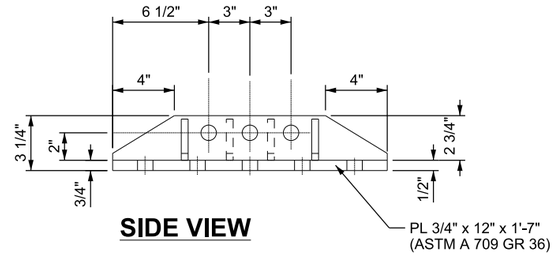

SIDE VIEW

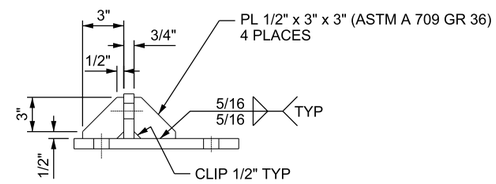

END VIEW

BRACKET

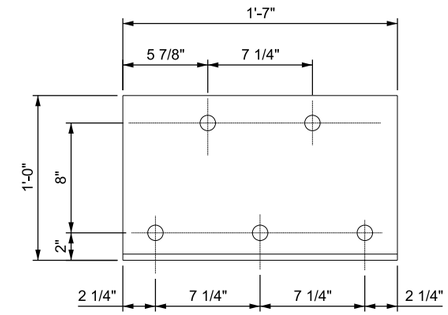

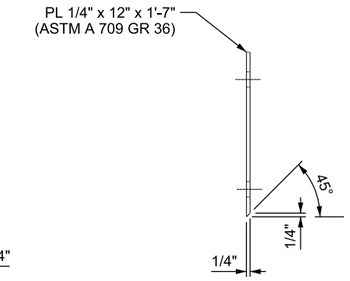

BACKING PLATE

NOTES:

1. DRILL ALL HOLES 1 1/8 INCH DIA.
2. MEET ANSI/AWS D1.1 SEC 5 & D1.5 SEC 3 FOR ALL WELDS. SEE STANDARD SPECIFICATION 02845.
3. GALVANIZE BRACKET AND BACKING PLATE TO MEET ASTM A 123 AFTER FABRICATION.
4. ATTACH BRACKET TO PARAPET USING 1 INCH DIA HIGH STRENGTH BOLTS, WASHERS, AND NUTS. BOLT LENGTHS VARY BASED ON THE TYPE OF PARAPET AND LOCATION OF BOLT. BOLT HEAD WILL BE ON TRAFFIC SIDE OF PARAPET.

3 CABLE BARRIER CONCRETE BRIDGE PARAPET DEPARTURE BRACKET AND BACKING PLATE

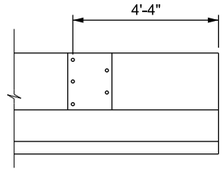

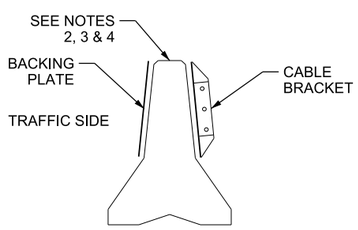

PLACEMENT ON JERSEY SHAPE PARAPET

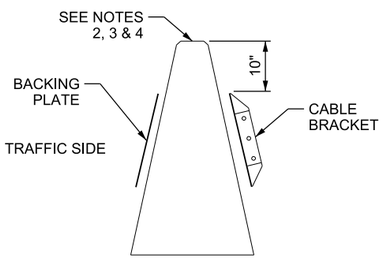

PLACEMENT ON CONSTANT SLOPE SHAPE PARAPET

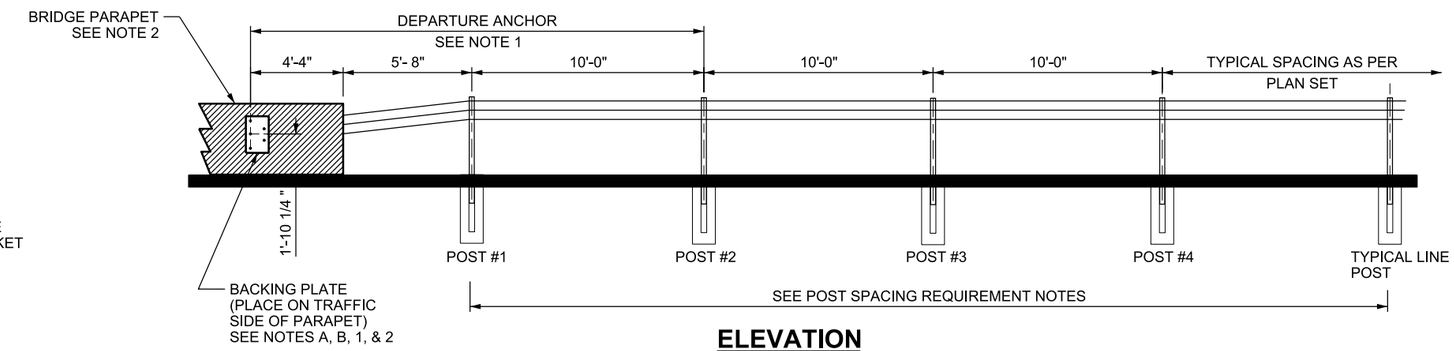

ELEVATION

NOTES FOR POST SPACING REQUIREMENTS :

POST 1, 2, OR MORE MAY BE SPECIALTY POSTS DEPENDING ON CABLE MANUFACTURER'S REQUIREMENTS. FOLLOW MANUFACTURER'S POST REQUIREMENTS WHEN USING BRIDGE PARAPET DEPARTURE BRACKET.

POSTS SPACING SHOWN ARE FOR EXAMPLE PURPOSES ONLY. REQUIREMENTS MAY VARY BASED ON MANUFACTURER'S REQUIREMENTS.

MINIMUM 2 TYPICAL POSTS SPACED AT 10 FT REQUIRED AFTER MANUFACTURER'S POST REQUIREMENTS FOR BRIDGE PARAPET DEPARTURE ANCHOR.

DESIGN-ONLY NOTES:

A. USE ON DEPARTURE END ONLY.

B. DO NOT USE WITH PRECAST CONCRETE BARRIER.

NOTES:

1. CORE 1 1/8 INCH HOLES INTO BRIDGE PARAPET TO ATTACH DEPARTURE BRACKET.
2. PLACE BACKING PLATE ON TRAFFIC SIDE. INSTALL BOLTS WITH HEAD OF BOLT ON TRAFFIC SIDE.
3. DEPARTURE BRACKET PAY LIMIT WILL INCLUDE THE INSTALLATION OF THE PARAPET DEPARTURE BRACKET, BACKING PLATE, HARDWARE AND SPECIALTY POSTS, HARDWARE AND INSTALLATION OF POSTS, TO INCLUDE FOUNDATIONS. MEET UDOT FOUNDATION REQUIREMENTS UNLESS MANUFACTURER'S ARE GREATER. SEE STD DWG BA 5A.
4. LEFT SIDE APPLICATION SHOWN, RIGHT SIDE SIMILAR.

3 CABLE BARRIER CONCRETE BRIDGE PARAPET DEPARTURE BRACKET PLACEMENT AND POST SPACING REQUIREMENTS

REVISIONS

NO.	DATE	APPR.	REMARKS

UTAH DEPARTMENT OF TRANSPORTATION
STANDARD DRAWINGS FOR ROAD AND BRIDGE CONSTRUCTION
SALT LAKE CITY, UTAH

RECOMMENDED FOR APPROVAL — JAN 01, 2017 DATE
CHAIRMAN STANDARDS COMMITTEE APPROVED — JAN 01, 2017 DATE
DEPUTY DIRECTOR

CABLE BARRIER PARAPET DEPARTURE BRACKET
STANDARD DRAWING TITLE

STD. DWG. NO.
BA 5C2

DGN File: L:\Standard Drawings\Imperial\2017 Approved\1-All Drawings\BA05C2.dgn
28-NOV-2016

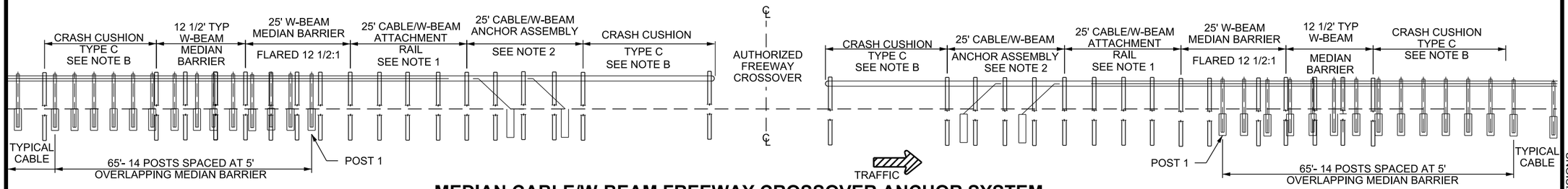

MEDIAN CABLE/W-BEAM FREEWAY CROSSOVER ANCHOR SYSTEM
ELEVATION

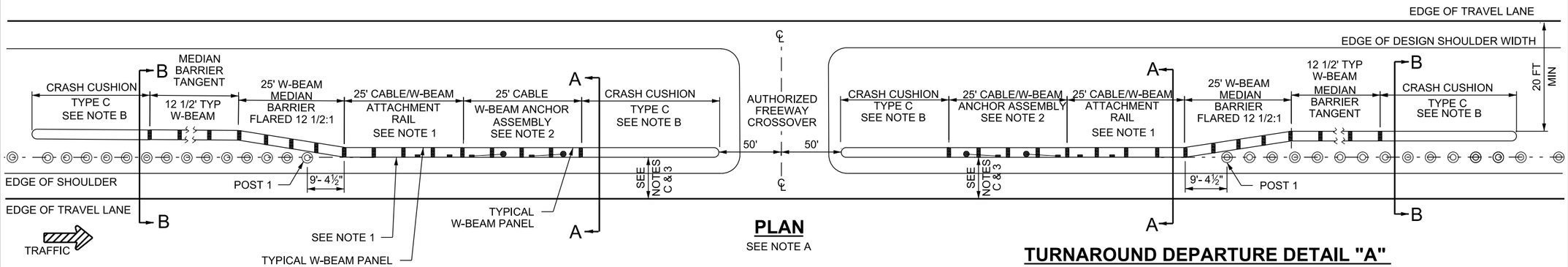

TURNAROUND APPROACH DETAIL

PLAN
SEE NOTE A

TURNAROUND DEPARTURE DETAIL "A"
GREATER THAN 35 FT MEDIAN
SEE NOTE A

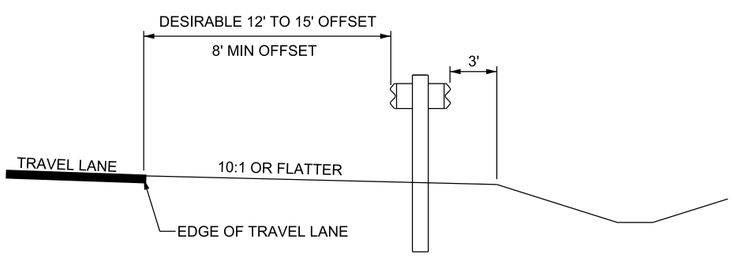

SECTION A-A
SEE NOTES C & 3

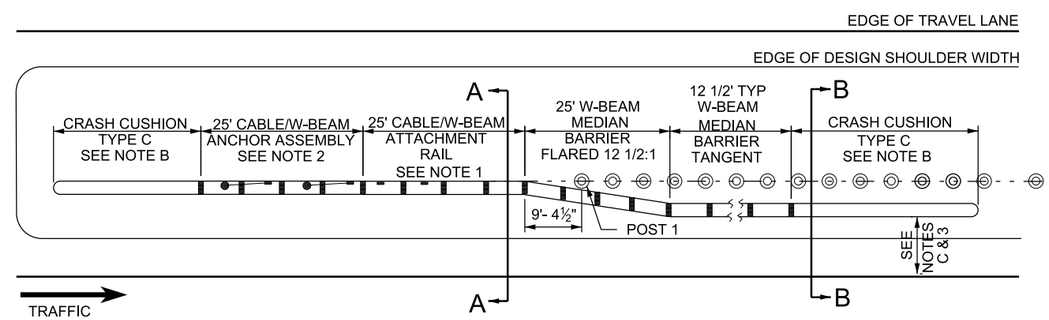

TURNAROUND DEPARTURE DETAIL "B"
GREATER THAN 15 FT TO LESS THAN 35 FT MEDIAN
SEE NOTE A

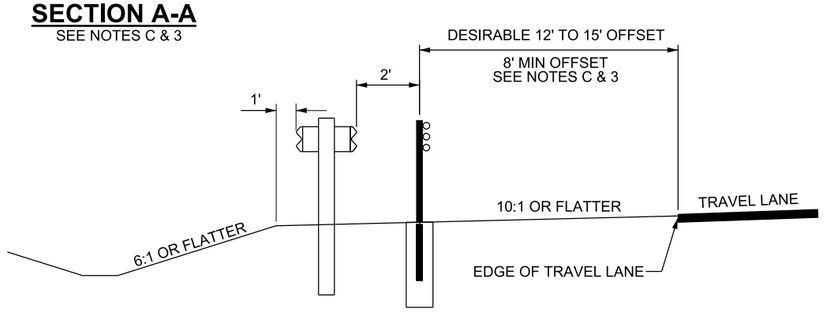

SECTION B-B
SEE NOTES C & 3

DESIGN-ONLY NOTES:

A. FREEWAY, EXPRESSWAY, AND OTHER DIVIDED ROADWAY LEFT SHOULDER APPLICATION WITH A MEDIAN WIDTH LESS THAN OR EQUAL TO 50 FT MEASURED FROM EDGE OF TRAVEL LANE TO EDGE OF TRAVEL LANE.
1) USE DETAIL "A" WHEN MEDIAN WIDTH IS MORE THAN OR EQUAL TO 35 FT AND LESS THAN 50 FT.
2) USE DETAIL "B" WHEN MEDIAN WIDTH IS GREATER THAN 15 FT AND LESS THAN 35 FT.
B. USE TYPE C CRASH CUSHION: SEE GUIDELINES FOR CRASH CUSHION & END TREATMENTS.
C. REFER TO STD DWG BA 5B1 AND BA 5B2 FOR OFFSET AND SLOPE REQUIREMENTS.
D. SEE STD DWG DD 7 FOR FREEWAY CROSSOVER WIDTH.

NOTES:

1. MEET MANUFACTURER'S REQUIREMENTS FOR CABLE TO RAIL ATTACHMENTS. RAIL ELEMENT IS CABLE BARRIER SYSTEM SPECIFIC. ELEMENT RANGES IN LENGTH FROM 6 FT 3 INCHES TO 25 FT. SUPPLY ASSOCIATED HARDWARE.
2. SEE STD DWG BA 5C1 FOR MEDIAN ANCHOR REQUIREMENTS.
3. SEE PLAN SET FOR PROJECT OFFSET REQUIREMENTS.

NO.	DATE	APPR.	REMARKS

REVISIONS

UTAH DEPARTMENT OF TRANSPORTATION
STANDARD DRAWINGS FOR ROAD AND BRIDGE CONSTRUCTION
SALT LAKE CITY, UTAH

RECOMMENDED FOR APPROVAL — DATE: JAN 01, 2017
CHAIRMAN STANDARDS COMMITTEE APPROVED — DATE: JAN 01, 2017
DEPUTY DIRECTOR

MEDIAN CABLE BARRIER
W-BEAM DOUBLE SIDED
AND FREEWAY CROSSOVER
ANCHOR SYSTEM
(TYPE C; C.A.T.)
STANDARD DRAWING TITLE

STD. DWG. NO.
BA 5D1

DGN File: L:\Standard Drawings\Imperial\2017 Approved\1-All Drawings\BA05D1.dgn
28-NOV-2016

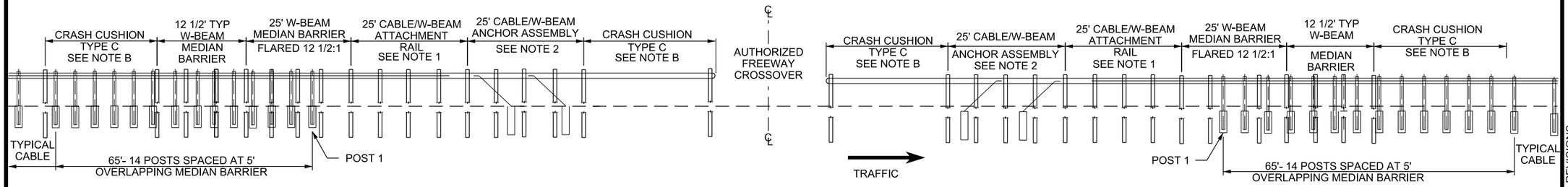

MEDIAN CABLE/W-BEAM FREEWAY CROSSOVER ANCHOR SYSTEM
ELEVATION

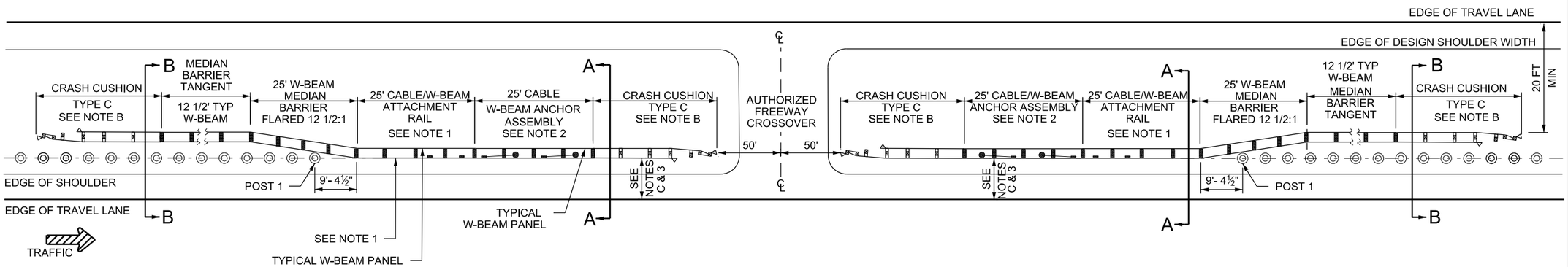

TURNAROUND APPROACH DETAIL

PLAN
SEE NOTE A

TURNAROUND DEPARTURE DETAIL "A"
35 FT TO 50 FT MEDIAN
SEE NOTE A

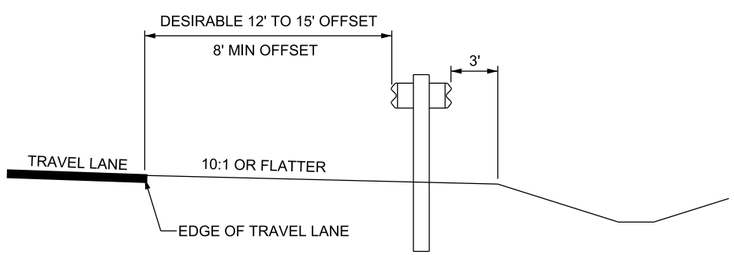

SECTION A-A
SEE NOTES C & 3

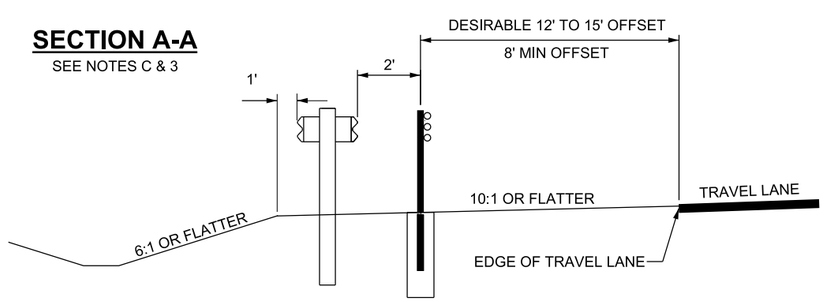

SECTION B-B
SEE NOTES C & 3

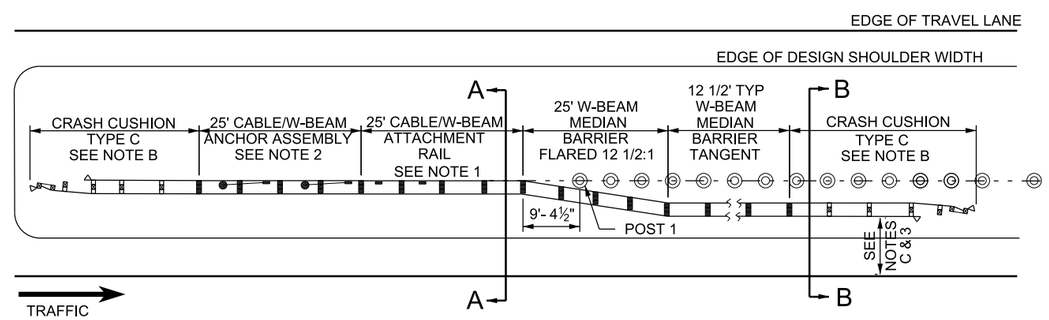

TURNAROUND DEPARTURE DETAIL "B"
GREATER THAN 15 FT TO LESS THAN 35 FT MEDIAN
SEE NOTE A

DESIGN-ONLY NOTES:

A. FREEWAY, EXPRESSWAY, AND OTHER DIVIDED ROADWAY LEFT SHOULDER APPLICATION WITH A MEDIAN WIDTH LESS THAN OR EQUAL TO 50 FT MEASURED FROM EDGE OF TRAVEL LANE TO EDGE OF TRAVEL LANE.
   1) USE DETAIL "A" WHEN MEDIAN WIDTH IS MORE THAN OR EQUAL TO 35 FT AND LESS THAN 50 FT.
   2) USE DETAIL "B" WHEN MEDIAN WIDTH IS GREATER THAN 15 FT AND LESS THAN 35 FT.
B. USE TYPE C CRASH CUSHION: SEE GUIDELINES FOR CRASH CUSHION & END TREATMENTS.
C. REFER TO STD DWG BA 5B1 AND BA 5B2 FOR OFFSET AND SLOPE REQUIREMENTS.
D. SEE STD DWG DD 7 FOR FREEWAY CROSSOVER WIDTH.

NOTES:

1. MEET MANUFACTURER'S REQUIREMENTS FOR CABLE TO RAIL ATTACHMENTS. RAIL ELEMENT IS CABLE BARRIER SYSTEM SPECIFIC. ELEMENT RANGES IN LENGTH FROM 6 FT 3 INCHES TO 25 FT. SUPPLY ASSOCIATED HARDWARE.
2. SEE STD DWG BA 5C1 FOR MEDIAN ANCHOR REQUIREMENTS.
3. SEE PLAN SET FOR PROJECT OFFSET REQUIREMENTS.

NO.	DATE	APPR.	REMARKS

REVISIONS

UTAH DEPARTMENT OF TRANSPORTATION
STANDARD DRAWINGS FOR ROAD AND BRIDGE CONSTRUCTION
SALT LAKE CITY, UTAH

RECOMMENDED FOR APPROVAL — JAN 01, 2017 DATE
CHAIRMAN STANDARDS COMMITTEE APPROVED — JAN 01, 2017 DATE
DEPUTY DIRECTOR

MEDIAN CABLE BARRIER
W-BEAM DOUBLE SIDED
AND FREEWAY
CROSSOVER
ANCHOR SYSTEM
(TYPE C; FLEAT-MT)
STANDARD DRAWING TITLE

STD. DWG. NO.
BA 5D2

DGN File:L:\Standard Drawings\Imperial\2017 Approved\1-All Drawings\BA05D2.dgn
28-NOV-2016

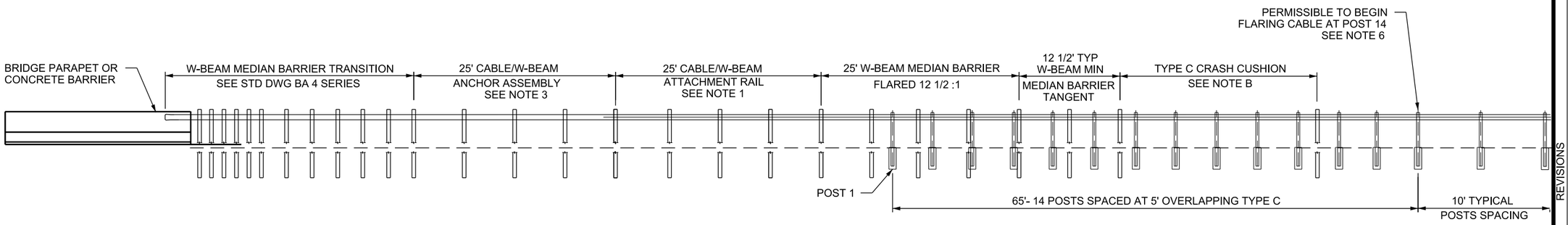

CABLE/W-BEAM NARROW MEDIAN PARAPET OR CONCRETE BARRIER ANCHOR ELEVATION

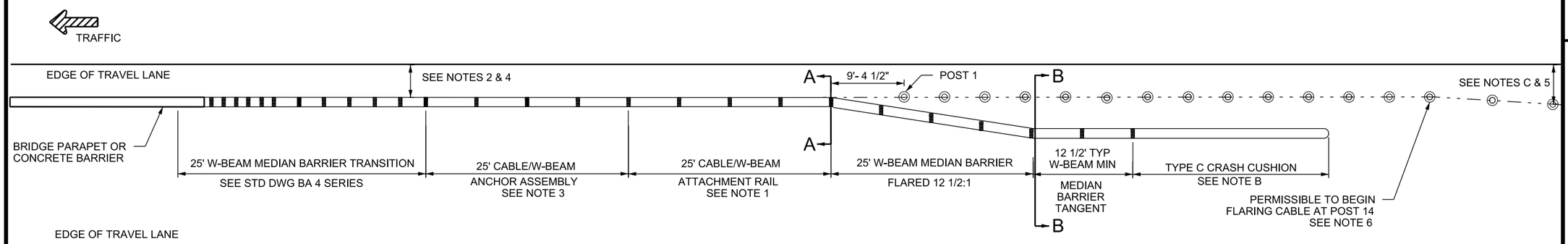

PLAN

SEE NOTE A

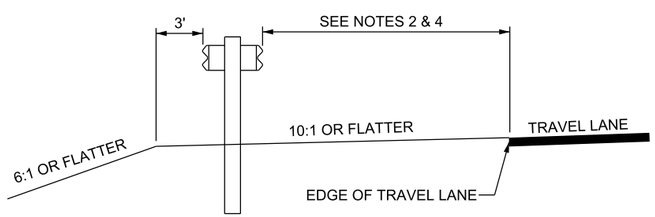

SECTION A-A

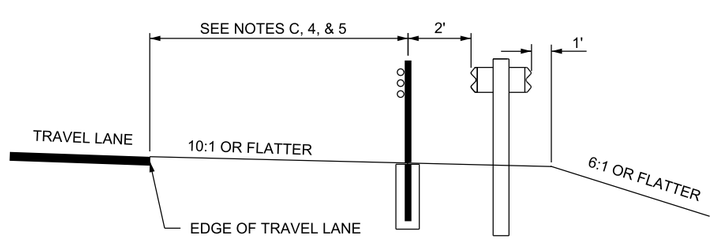

SECTION B-B

DESIGN-ONLY NOTES:

A. USE IN MEDIAN APPLICATION WHEN MEDIAN WIDTH IS LESS THAN 50 FT MEASURED FROM EDGE OF TRAVEL LANE TO EDGE OF TRAVEL LANE OR WHEN BARRIER HAZARD IS WITHIN THE MAXIMUM AASHTO CLEAR ZONE.

B. USE TYPE C CRASH CUSHION: SEE GUIDELINES FOR CRASH CUSHION & END TREATMENTS.

C. REFER TO STD DWG BA 5B1 & BA 5B2 FOR OFFSET AND SLOPE REQUIREMENTS.

NOTES:

1. MEET MANUFACTURER'S REQUIREMENTS FOR CABLE TO RAIL ATTACHMENTS. RAIL ELEMENT IS CABLE BARRIER SYSTEM SPECIFIC. ELEMENT RANGES IN LENGTH FROM 6 FT 3 INCHES TO 25 FT. SUPPLY ASSOCIATED HARDWARE.
2. MEET STANDARD SPECIFICATION 02841 AND BA 4 SERIES STD DWGS FOR W-BEAM GUARDRAIL UNLESS OTHERWISE SPECIFIED.
3. REFER TO STD DWG BA 5C1 FOR ANCHOR ASSEMBLY REQUIREMENTS.
4. REFER TO PLAN SET FOR CRASH CUSHION AND MEDIAN BARRIER OFFSET REQUIREMENTS.
5. SEE PLAN SET FOR PROJECT OFFSET REQUIREMENTS.
6. FLARE RATE: EQUAL TO OR FLATTER THAN 30:1 DESIRABLE; 20:1 MAXIMUM ACCEPTABLE.
7. A MINIMUM OF TWO PRECAST BARRIER SECTIONS WITH STABILIZATION PINS REQUIRED WHEN ATTACHING W-BEAM GUARDRAIL TO EXISTING PRECAST BARRIER.

NO.	DATE	APPR.	REMARKS

REVISIONS

UTAH DEPARTMENT OF TRANSPORTATION
STANDARD DRAWINGS FOR ROAD AND BRIDGE CONSTRUCTION
SALT LAKE CITY, UTAH

RECOMMENDED FOR APPROVAL — JAN 01, 2017 DATE
CHAIRMAN STANDARDS COMMITTEE APPROVED — JAN 01, 2017 DATE
DEPUTY DIRECTOR

CABLE BARRIER W-BEAM NARROW MEDIAN PARAPET OR CONCRETE BARRIER ANCHOR
STANDARD DRAWING TITLE

STD. DWG. NO.
BA 5E1

DGN File:L:\Standard Drawings\Imperial\2017 Approved\1-All Drawings\BA05E1.dgn
28-NOV-2016

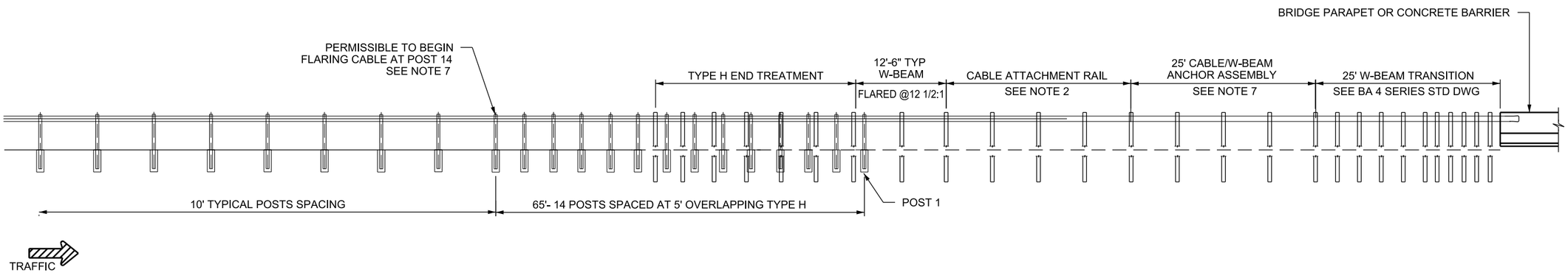

ELEVATION

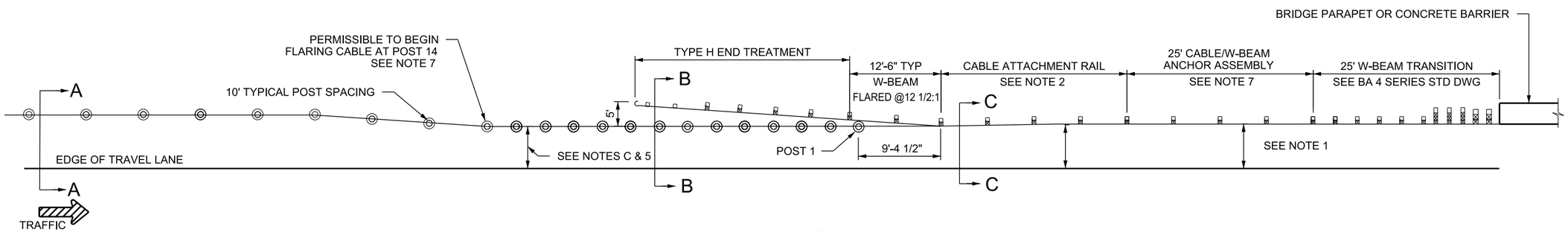

PLAN VIEW

LEFT SHOULDER APPLICATION SHOWN
RIGHT SHOULDER APPLICATION SIMILAR

CABLE/W-BEAM APPROACH TRANSITION

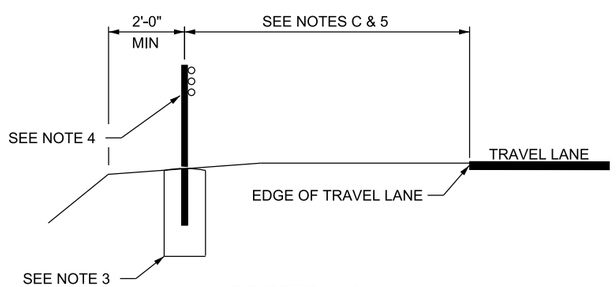

SECTION A-A

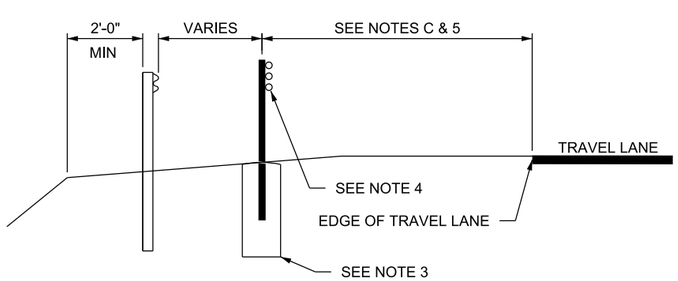

SECTION B-B

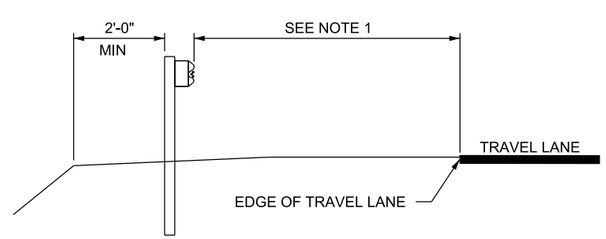

SECTION C-C

DESIGN-ONLY NOTES:

A. USE AN APPROVED TYPE H END TREATMENT: SEE GUIDELINES FOR CRASH CUSHIONS AND END TREATMENTS.

B. TYPICAL W-BEAM AND END TREATMENT WILL BE PAID AS STANDARD PAY ITEMS.

C. REFER TO STD DWG BA 5B1 & BA 5B2 FOR MAXIMUM AND MINUMUM OFFSET AND SLOPE REQUIREMENTS.

NOTES:

1. MEET STANDARD SPECIFICATION 02841 AND BA 4 SERIES STD DWGS FOR W-BEAM GUARDRAIL UNLESS OTHERWISE SPECIFIED.
2. MEET MANUFACTURER'S REQUIREMENTS FOR CABLE TO RAIL ATTACHMENTS. RAIL ELEMENT IS CABLE BARRIER SYSTEM SPECIFIC. ELEMENT RANGES IN LENGTH FROM 6 FT 3 INCHES TO 25 FT.
3. INSTALL 12 INCH X 42 INCH DIA FOUNDATION. MEET ALL OTHER MANUFACTURER REQUIREMENTS FOR CAST-IN-PLACE CABLE POST FOUNDATIONS.
4. MEET MANUFACTURER'S REQUIREMENTS FOR CABLE HEIGHT AND SEPARATION.
5. SEE PLAN SET FOR PROJECT OFFSET REQUIREMENTS.
6. FLARE RATE: EQUAL TO OR FLATTER THAN 30:1 DESIRABLE; 20:1 MAXIMUM ACCEPTABLE.
7. REFER TO STD DWG BA 5C1 FOR ANCHOR ASSEMBLY REQUIREMENTS.

REVISIONS

NO.	DATE	APPR.	REMARKS

UTAH DEPARTMENT OF TRANSPORTATION
STANDARD DRAWINGS FOR ROAD AND BRIDGE CONSTRUCTION
SALT LAKE CITY, UTAH

RECOMMENDED FOR APPROVAL — JAN 01, 2017 DATE
CHAIRMAN STANDARDS COMMITTEE APPROVED — JAN 01, 2017 DATE
DEPUTY DIRECTOR

CABLE BARRIER W-BEAM APPROACH TRANSITION
STANDARD DRAWING TITLE

STD. DWG. NO.
BA 5E2

DGN File: L:\Standard Drawings\Imperial\2017 Approved\1-All Drawings\BA05E2.dgn
28-NOV-2016

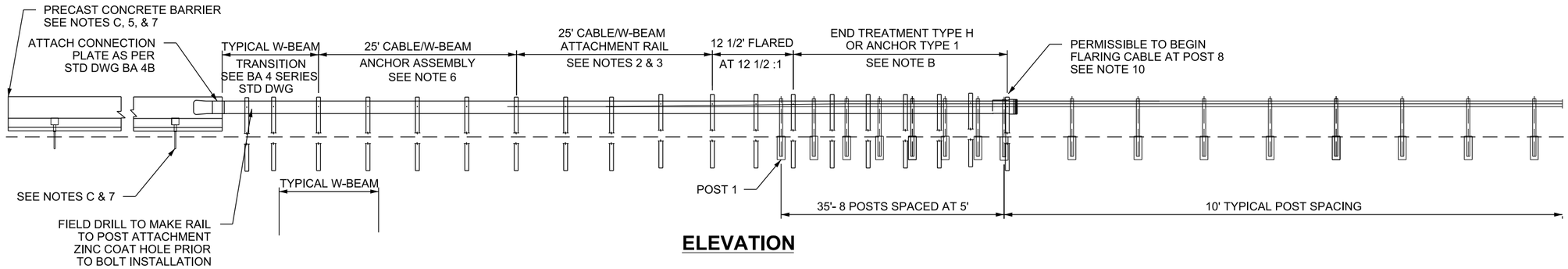

ELEVATION

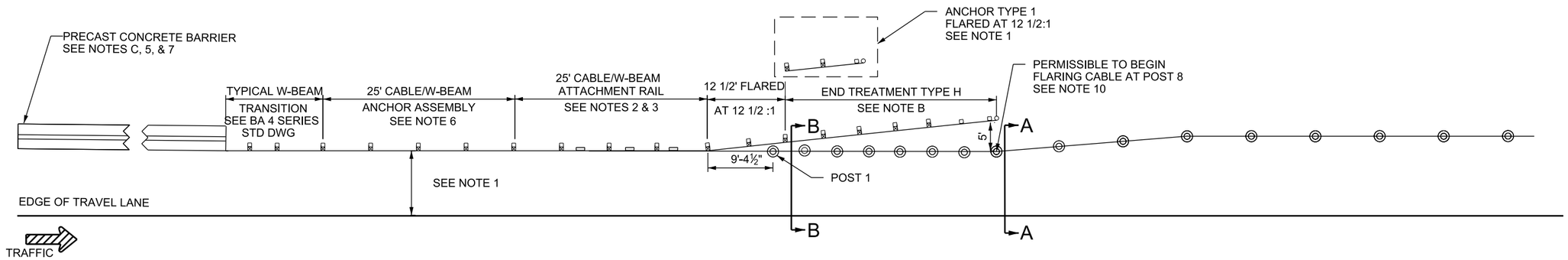

PLAN VIEW

LEFT SHOULDER APPLICATION SHOWN
RIGHT SHOULDER APPLICATION SIMILAR

CABLE/W-BEAM/PRECAST CONCRETE BARRIER TRAILING ANCHOR TRANSITION SYSTEM

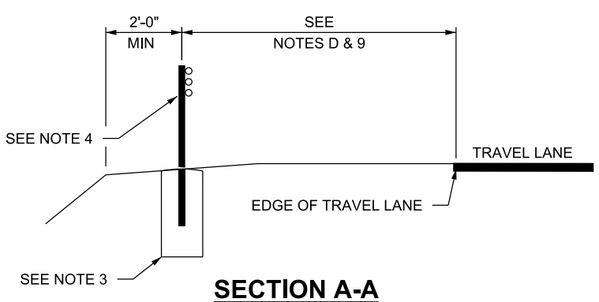

SECTION A-A

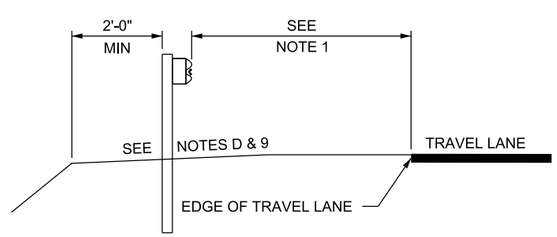

SECTION C-C

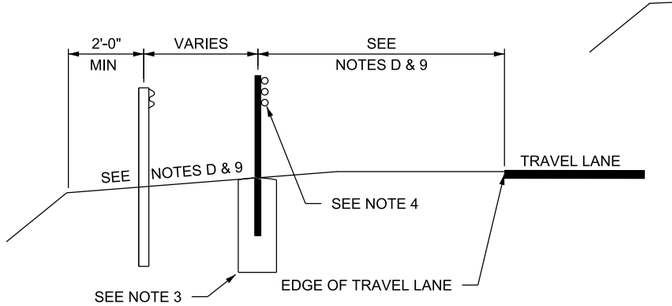

SECTION B-B

DESIGN-ONLY NOTES:

A. USES:
1. FREEWAYS, EXPRESSWAY, AND OTHER DIVIDED ROADWAY LEFT SHOULDER APPLICATION.
   A) MEDIAN WIDTH GREATER THAN 50 FT MEASURED FROM EDGE OF TRAVEL LANE TO EDGE OF TRAVEL LANE AND BACK SIDE OF INSTALLATION IS OUTSIDE THE MAXIMUM REQUIRED CLEAR ZONE FOR OPPOSING TRAFFIC.
2. SUITABLE FOR RIGHT SHOULDER APPLICATION.

B. USE ANCHOR TYPE 1 WHEN ENGINEERING JUDGEMENT DETERMINES:
1. DUE TO ROADWAY OFFSETS THE PROBABILITY OF IMPACT IS MINIMAL.
2. THE MEDIAN TERRAIN IS SUCH THAT AN ERRANT VEHICLE IS UNLIKELY TO IMPACT THE ANCHORING SYSTEM AND THE ANCHORING SYSTEMS IS OUTSIDE THE MAXIMUM REQUIRED CLEAR ZONE.

C. USE TYPE H END TREATMENT: SEE GUIDELINES FOR CRASH CUSHIONS AND BARRIER END TREATMENTS.

D. REFER TO STD DWG BA 5B1 & BA 5B2 FOR OFFSET AND SLOPE REQUIREMENTS.

NOTES:

1. MEET STANDARD SPECIFICATIONS 02841 AND BA 4 SERIES STD DWGS FOR W-BEAM GUARDRAIL UNLESS OTHERWISE SPECIFIED.
2. MEET MANUFACTURER'S REQUIREMENTS FOR CABLE TO RAIL ATTACHMENTS. RAIL ELEMENT IS CABLE BARRIER SYSTEM SPECIFIC. ELEMENT RANGES IN LENGTH FROM 6 FT 3 INCHES TO 25 FT. SUPPLY ASSOCIATED HARDWARE.
3. INSTALL 12 INCH DIA X 42 INCH DEEP FOUNDATION. MEET ALL OTHER MANUFACTURER'S REQUIREMENTS FOR CAST IN PLACE CABLE POST FOUNDATIONS.
4. MEET MANUFACTURER'S REQUIREMENTS FOR CABLE HEIGHT AND SEPARATION.
5. USE A MINIMUM OF TWO PRECAST CONCRETE BARRIER SECTIONS WITH STABILIZATION PINS REQUIRED WHEN ATTACHING W-BEAM GUARDRAIL TO EXISTING NON-STANDARD PRECAST BARRIER.
6. REFER TO STD DWG BA 5C1 FOR ANCHOR ASSEMBLY REQUIREMENTS.
7. STANDARD PRECAST BARRIER SHOWN. CAN BE USED WITH PRECAST CONSTANT SLOPE TRANSITION SECTION (STD DWG BA 3B3) PRIOR TO W-BEAM RAIL ELEMENTS. EIGHT STABILIZATION PINS REQUIRED.
8. TYPICAL W-BEAM GUARDRAIL AND ANCHOR TYPE 1 WILL BE PAID AS STANDARD PAY ITEMS.
9. SEE PLAN SET FOR PROJECT OFFSET REQUIREMENTS.
10. FLARE RATE: EQUAL TO OR FLATTER THAN 30:1 DESIRABLE; 20:1 MAXIMUM ACCEPTABLE.

REVISIONS

NO.	DATE	APPR.	REMARKS

UTAH DEPARTMENT OF TRANSPORTATION
STANDARD DRAWINGS FOR ROAD AND BRIDGE CONSTRUCTION
SALT LAKE CITY, UTAH

RECOMMENDED FOR APPROVAL — JAN 01, 2017 DATE
CHAIRMAN STANDARDS COMMITTEE APPROVED — JAN 01, 2017 DATE
DEPUTY DIRECTOR — DATE

CABLE BARRIER W-BEAM PRECAST CONCRETE BARRIER TRAILING ANCHOR

STANDARD DRAWING TITLE

STD. DWG. NO.
BA 5E3

DGN File: L:\Standard Drawings\Imperial\2017 Approved\1-All Drawings\BA05E3.dgn
28-NOV-2016

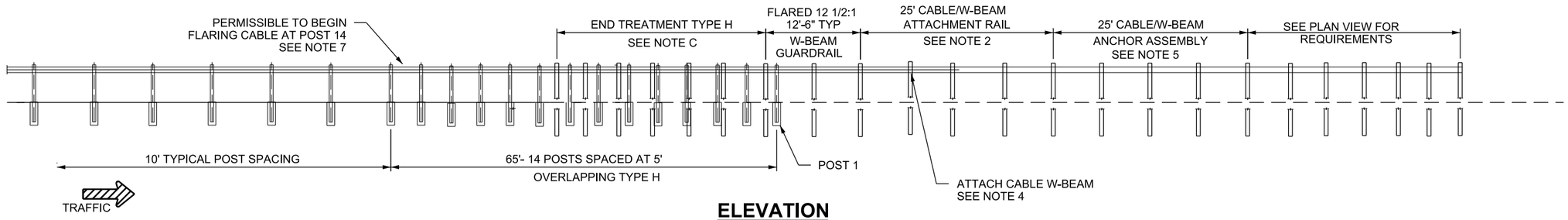

ELEVATION

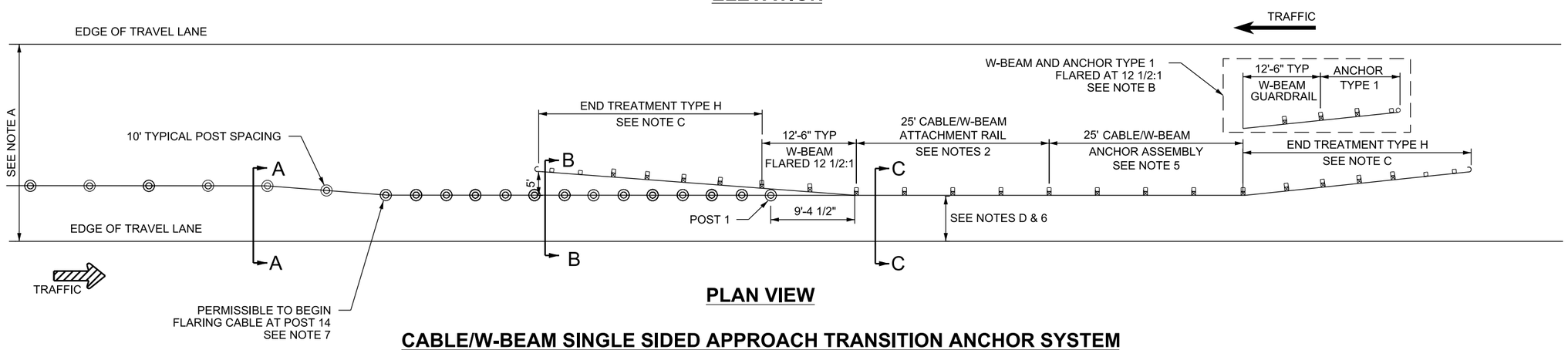

PLAN VIEW

CABLE/W-BEAM SINGLE SIDED APPROACH TRANSITION ANCHOR SYSTEM

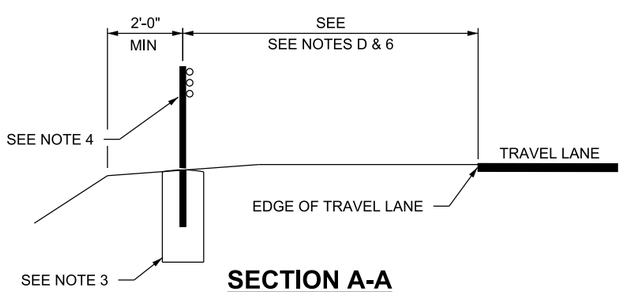

SECTION A-A

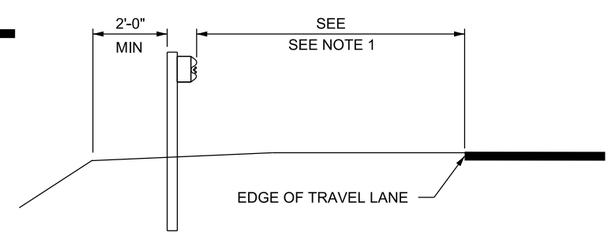

SECTION C-C

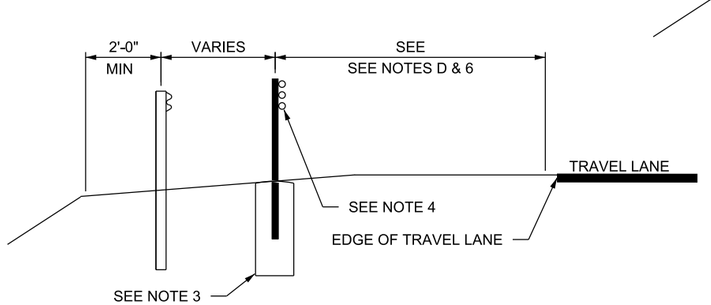

SECTION B-B

DESIGN-ONLY NOTES:

A. USES:
   1. FREEWAYS, EXPRESSWAY, AND OTHER DIVIDED ROADWAY LEFT SHOULDER APPLICATION.
      A) MEDIAN WIDTH GREATER THAN 50 FT MEASURED FROM EDGE OF TRAVEL LANE TO EDGE OF TRAVEL LANE AND BACK SIDE OF INSTALLATION IS OUTSIDE THE MAXIMUM REQUIRED CLEAR ZONE FOR OPPOSING TRAFFIC.
   2. SUITABLE FOR RIGHT SHOULDER APPLICATION.

B. USE A W-BEAM GUARDRAIL ANCHOR TYPE 1 WHEN ENGINEERING JUDGEMENT DETERMINES:
   1. DUE TO ROADWAY OFFSETS THE PROBABILITY OF IMPACT IS MINIMAL.
   2. THE MEDIAN TERRAIN IS SUCH THAT AN ERRANT VEHICLE IS UNLIKELY TO IMPACT THE ANCHORING SYSTEM AND THE ANCHORING SYSTEM IS OUTSIDE THE MAXIMUM REQUIRED CLEAR ZONE.

C. USE TYPE H END TREATMENT: SEE GUIDELINES FOR CRASH CUSHIONS AND BARRIER END TREATMENTS.

D. REFER TO STD DWG BA 5B1 AND BA 5B2 FOR OFFSET AND SLOPE REQUIREMENTS.

NOTES:

1. MEET STANDARD SPECIFICATION 02841 AND BA 4 SERIES STD DWGS FOR W-BEAM GUARDRAIL UNLESS OTHERWISE SPECIFIED.
2. MEET MANUFACTURE'S REQUIREMENTS FOR CABLE TO RAIL ATTACHMENTS. RAIL ELEMENT IS CABLE BARRIER SYSTEM SPECIFIC. ELEMENT RANGES IN LENGTH FROM 6 FT 3 INCHES TO 25 FT. SUPPLY ASSOCIATED HARDWARE.
3. INSTALL 12 INCH DIA X 42 INCH DEEP FOUNDATION. MEET ALL OTHER MANUFACTURER'S REQUIREMENTS FOR CAST-IN-PLACE CABLE POST FOUNDATIONS.
4. MEET MANUFACTURER'S REQUIREMENTS FOR CABLE HEIGHT AND SEPARATION.
5. REFER TO STD DWG BA 5C1 FOR ANCHOR ASSEMBLY REQUIREMENTS.
6. SEE PLAN SET FOR PROJECT OFFSET REQUIREMENTS.
7. FLARE RATE: EQUAL TO OR FLATTER THAN 30:1 DESIRABLE; 20:1 MAXIMUM ACCEPTABLE.
8. PAY TYPICAL W-BEAM AND END TREATMENT AS STANDARD PAY ITEMS.

REVISIONS

NO.	DATE	APPR.	REMARKS

UTAH DEPARTMENT OF TRANSPORTATION
STANDARD DRAWINGS FOR ROAD AND BRIDGE CONSTRUCTION
SALT LAKE CITY, UTAH

RECOMMENDED FOR APPROVAL — JAN 01, 2017 DATE
CHAIRMAN STANDARDS COMMITTEE APPROVED — JAN 01, 2017 DATE
DEPUTY DIRECTOR

CABLE BARRIER
W-BEAM SINGLE SIDED
APPROACH
ANCHOR SYSTEM

STANDARD DRAWING TITLE

STD. DWG. NO.
BA 5F1

28-NOV-2016 DGN File: L:\Standard_Drawings\Imperial\2017 Approved\1-All Drawings\BA05F1.dgn

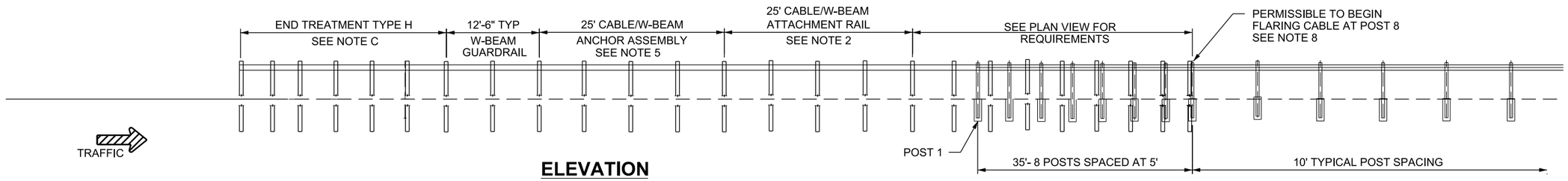

ELEVATION

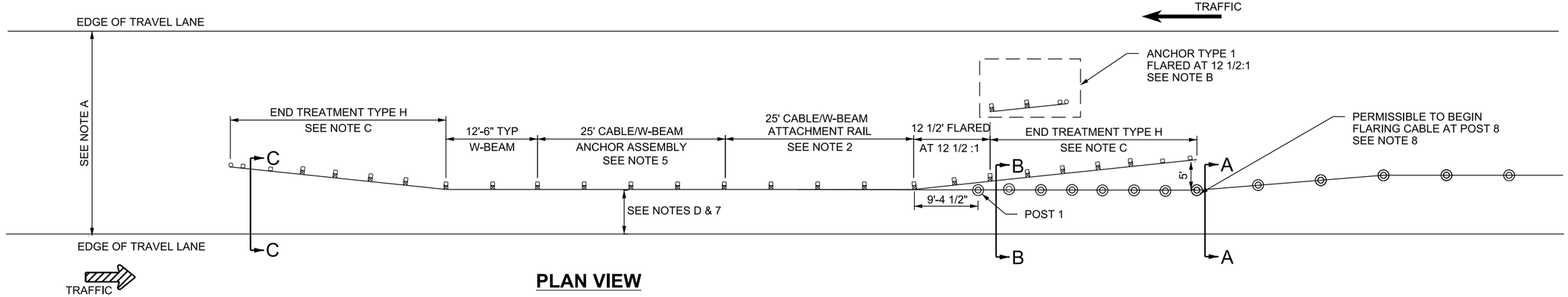

PLAN VIEW

CABLE/W-BEAM SINGLE SIDED DEPARTURE ANCHOR SYSTEM

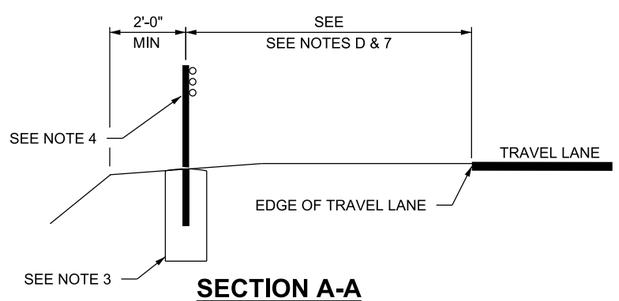

SECTION A-A

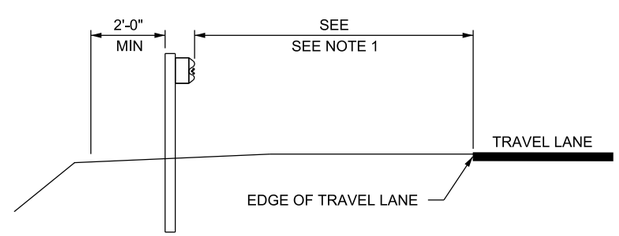

SECTION C-C

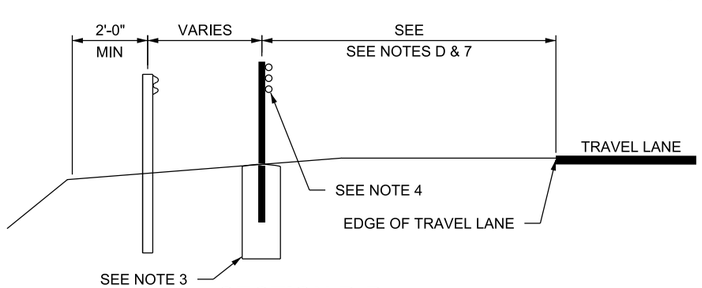

SECTION B-B

DESIGN-ONLY NOTES:

A. USES:
   1. FREEWAYS, EXPRESSWAYS, AND OTHER DIVIDED ROADWAY LEFT SHOULDER APPLICATION
      A) MEDIAN WIDTH GREATER THAN 50 FT MEASURED FROM EDGE OF TRAVEL LANE TO EDGE OF TRAVEL LANE AND BACK SIDE OF INSTALLATION ARE OUTSIDE THE MAXIMUM REQUIRED CLEAR ZONE.
   2. SUITABLE FOR RIGHT SHOULDER APPLICATION.

B. USE W-BEAM GUARDRAIL ANCHOR TYPE 1 WHEN ENGINEERING JUDGEMENT DETERMINES:
   1. DUE TO ROADWAY OFFSET THE PROBABILITY OF IMPACT IS MINIMAL.
   2. THE MEDIAN TERRAIN IS SUCH THAT AN ERRANT VEHICLE IS UNLIKELY TO IMPACT THE ANCHORING SYSTEM AND THE ANCHORING SYSTEM IS OUTSIDE THE MAXIMUM REQUIRED CLEAR ZONE.

C. USE TYPE H END TREATMENT: SEE GUIDELINES FOR CRASH CUSHIONS AND BARRIER END TREATMENTS.

D. REFER TO DETAIL STD DWG BA 5B1 & BA 5B2 FOR OFFSET AND SLOPE REQUIREMENTS.

NOTES:

1. MEET STANDARD SPECIFICATION 02841 AND BA 4 SERIES STD DWGS FOR W-BEAM GUARDRAIL UNLESS OTHERWISE SPECIFIED.
2. MEET MANUFACTURER'S REQUIREMENTS FOR CABLE TO RAIL ATTACHMENTS. RAIL ELEMENT IS CABLE BARRIER SYSTEMS SPECIFIC. ELEMENT RANGES IN LENGTH FROM 6 FT 3 INCHES TO 25 FT.
3. INSTALL 12 INCH DIA X 42 INCH DEEP FOUNDATION. MEET ALL OTHER MANUFACTURER'S REQUIREMENTS FOR CAST-IN-PLACE CABLE POST FOUNDATIONS.
4. MEET MANUFACTURER'S REQUIREMENTS FOR CABLE HEIGHT AND SEPARATION.
5. REFER TO STD DWG BA 5C1 FOR ANCHOR ASSEMBLY REQUIREMENTS.
6. PAY TYPICAL W-BEAM AND END TREATMENT AS STANDARD PAY ITEMS.
7. SEE PLAN SET FOR PROJECT OFFSET REQUIREMENTS.
8. FLARE RATE: FLATTER OR EQUAL TO 30:1 DESIRABLE, 20:1 MAXIMUM ACCEPTABLE.

NO.	DATE	APPR.	REMARKS

REVISIONS

UTAH DEPARTMENT OF TRANSPORTATION
STANDARD DRAWINGS FOR ROAD AND BRIDGE CONSTRUCTION
SALT LAKE CITY, UTAH

RECOMMENDED FOR APPROVAL — JAN 01, 2017 DATE
CHAIRMAN STANDARDS COMMITTEE APPROVED — JAN 01, 2017 DATE
DEPUTY DIRECTOR

CABLE BARRIER
W-BEAM SINGLE SIDED
DEPARTURE ANCHOR
SYSTEM

STANDARD DRAWING TITLE

STD. DWG. NO.
BA 5F2

DGN File:L:\Standard Drawings\Imperial\2017 Approved\1-All Drawings\BA05F2.dgn
28-NOV-2016

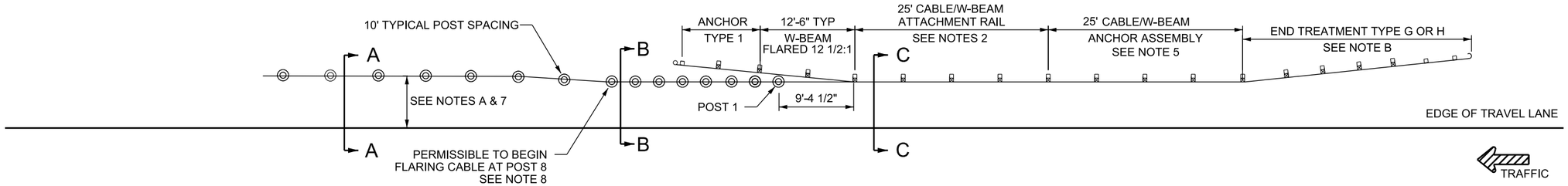

CABLE/W-BEAM FREEWAY RIGHT SHOULDER TRAILING ANCHOR SYSTEM

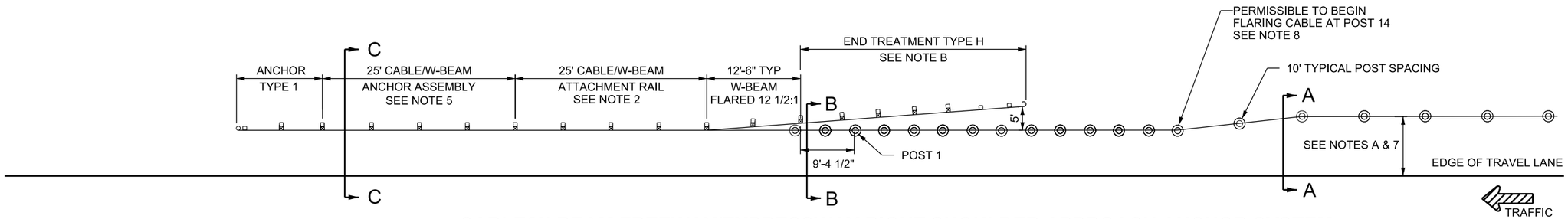

CABLE/W-BEAM FREEWAY/EXPRESSWAY RIGHT SHOULDER APPROACH ANCHOR SYSTEM

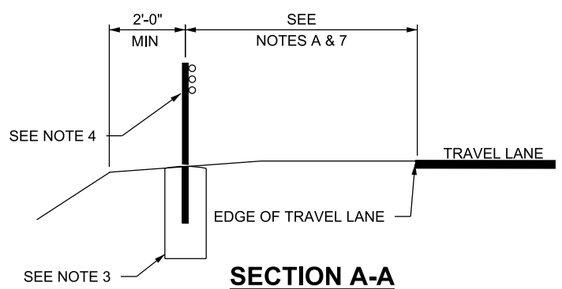

SECTION A-A

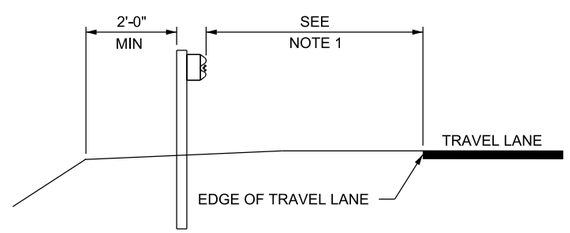

SECTION C-C

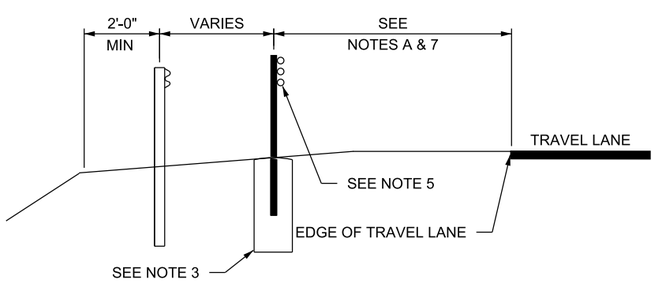

SECTION B-B

DESIGN-ONLY NOTES:

A. REFER TO STD DWG BA 5B1 & BA 5B2 FOR OFFSET AND SLOPE REQUIREMENTS.

B. USE TYPE H END TREATMENT: SEE GUIDELINES FOR CRASH CUSHIONS AND BARRIER END TREATMENTS.

NOTES:

1. MEET STANDARD SPECIFICATION 02841 AND BA 4 SERIES STD DWGS FOR W-BEAM GUARDRAIL UNLESS OTHERWISE SPECIFIED.
2. MEET MANUFACTURER'S REQUIREMENTS FOR CABLE TO RAIL ATTACHMENTS. RAIL ELEMENT IS CABLE BARRIER SYSTEM SPECIFIC. ELEMENT RANGES IN LENGTH FROM 6 FT 3 INCHES TO 25 FT. SUPPLY ASSOCIATED HARDWARE.
3. INSTALL 12 INCH DIA X 42 INCH DEEP FOUNDATION. MEET ALL OTHER MANUFACTURER'S REQUIREMENTS FOR CAST-IN-PLACE CABLE POST FOUNDATIONS.
4. MEET MANUFACTURER'S REQUIREMENTS FOR CABLE HEIGHT AND SEPARATION.
5. REFER TO STD DWG BA 5C1 FOR ANCHOR ASSEMBLY REQUIREMENTS.
6. PAY TYPICAL W-BEAM GUARDRAIL AND END TREATMENTAS STANDARD PAY ITEMS.
7. SEE PLAN SET FOR PROJECT OFFSET REQUIREMENTS.
8. FLARE RATE: EQUAL TO OR FLATTER THAN 30:1 DESIRABLE; 20:1 MAXIMUM ACCEPTABLE.

REVISIONS				
NO.	DATE	APPR.	REMARKS	

UTAH DEPARTMENT OF TRANSPORTATION
STANDARD DRAWINGS FOR ROAD AND BRIDGE CONSTRUCTION
SALT LAKE CITY, UTAH

RECOMMENDED FOR APPROVAL — DATE: JAN 01, 2017
CHAIRMAN STANDARDS COMMITTEE APPROVED — DATE: JAN 01, 2017
DEPUTY DIRECTOR

STANDARD DRAWING TITLE: CABLE BARRIER W-BEAM FREEWAY/EXPRESSWAY RIGHT SHOULDER ANCHOR SYSTEM

STD. DWG. NO. BA 5G

DGN File:L:\Standard Drawings\Imperial\2017 Approved\1-All Drawings\BA05G.dgn
28-NOV-2016

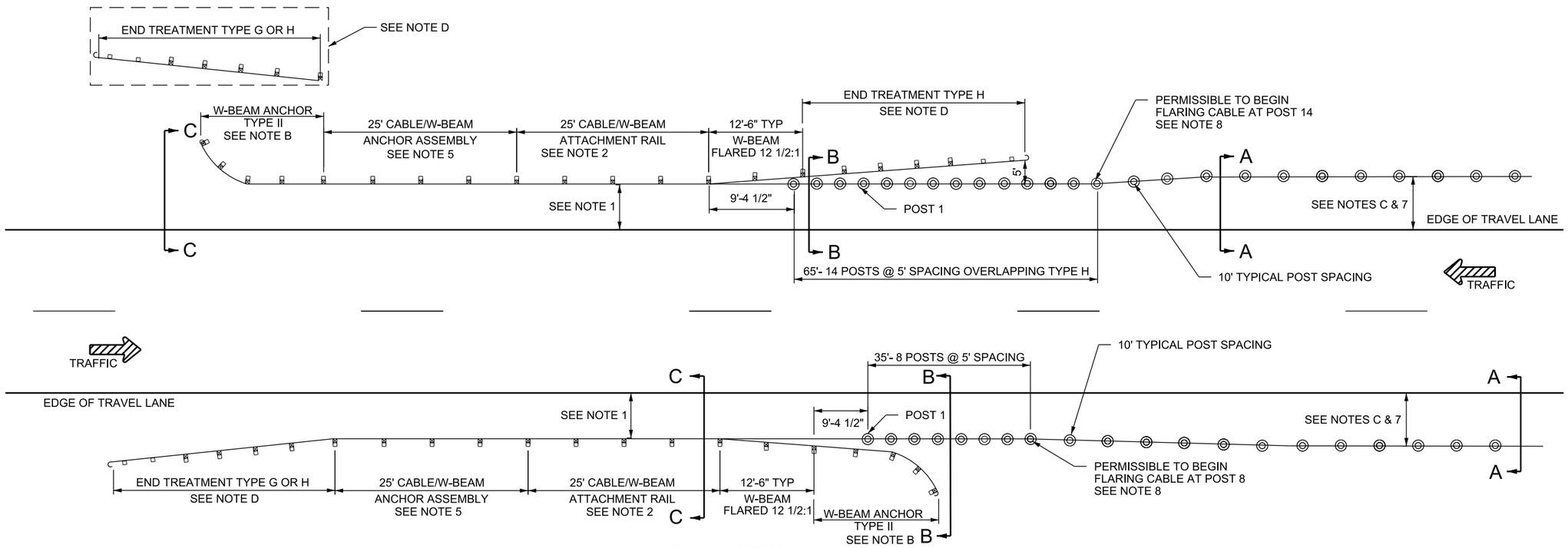

PLAN VIEW

CABLE/W-BEAM SHOULDER APPLICATION FOR 2-LANE, 2-WAY AND MULTILANE NON-DIVIDED ROADWAY

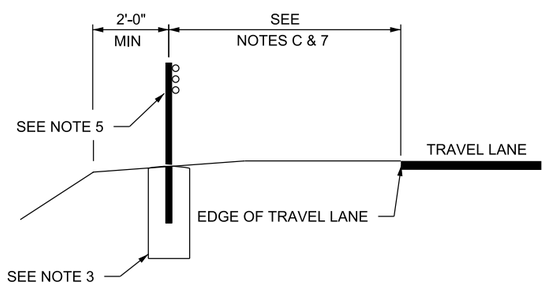

SECTION A-A

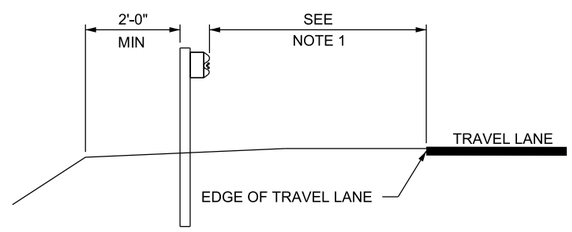

SECTION C-C

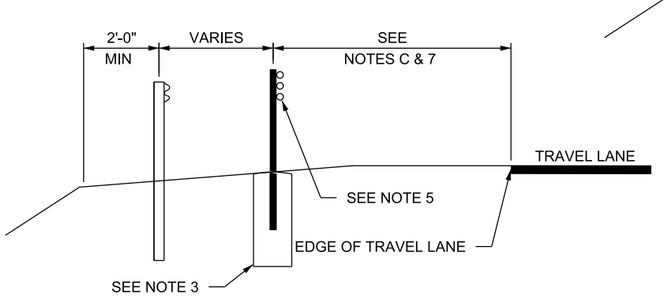

SECTION B-B

DESIGN-ONLY NOTES:

A. USE ON 2-LANE, 2-WAY AND MULTI LANE, 2-WAY NON-DIVIDED ROADWAYS.
B. USE THE APPROPRIATE TRAILING END TREATMENT AS FOLLOWS:
   1. USE ANCHOR TYPE II WHEN TRAILING END IS OFFSET BEYOND THE MINIMUM REQUIRED CLEAR ZONE FOR OPPOSING TRAFFIC.
      A. ATTACH ANCHOR TYPE II TO CABLE /W-BEAM ANCHOR ASSEMBLY.
   2. USE AN END TREATMENT TYPE G OR TYPE H WHEN TRAILING END IS OFFSET INSIDE THE MINIMUM REQUIRED CLEAR ZONE FOR OPPOSING TRAFFIC.
      1. ATTACH ANCHOR TYPE II TO CABLE /W-BEAM ANCHOR ASSEMBLY.
C. REFER TO STD DWG BA 5B1 & BA 5B2 FOR OFFSET AND SLOPE REQUIREMENTS.
D. USE TYPE H END TREATMENT: SEE GUIDELINES FOR CRASH CUSHIONS AND BARRIER END TREATMENTS.

NOTES:

1. MEET STANDARD SPECIFICATION 02841 AND BA 4 SERIES STD DWGS FOR W-BEAM GUARDRAIL UNLESS OTHERWISE SPECIFIED.
2. MEET MANUFACTURER'S REQUIREMENTS FOR CABLE TO RAIL ATTACHMENTS. RAIL ELEMENT IS CABLE BARRIER SYSTEM SPECIFIC. ELEMENT RANGES IN LENGTH FROM 6 FT 3 INCHES TO 25 FT. SUPPLY ASSOCIATED HARDWARE.
3. INSTALL 12 INCH DIA X 42 INCH DEEP FOUNDATION. MEET ALL OTHER MANUFACTURER'S REQUIREMENTS FOR CAST-IN-PLACE CABLE POST FOUNDATIONS.
4. MEET MANUFACTURER'S REQUIREMENTS FOR CABLE HEIGHT AND SEPARATION.
5. REFER TO STD DWG BA 5C1 FOR ANCHOR ASSEMBLY REQUIREMENTS.
6. PAY TYPICAL W-BEAM GUARDRAIL AND END TREATMENT AS STANDARD PAY ITEMS.
7. SEE PLAN SET FOR PROJECT OFFSET REQUIREMENTS.
8. FLARE RATE: FLATTER OR EQUAL TO 30:1 DESIRABLE, 20:1 MINIMUM ACCEPTABLE.

REVISIONS

NO.	DATE	APPR.	REMARKS

UTAH DEPARTMENT OF TRANSPORTATION
STANDARD DRAWINGS FOR ROAD AND BRIDGE CONSTRUCTION
SALT LAKE CITY, UTAH

RECOMMENDED FOR APPROVAL — JAN 01, 2017 DATE
CHAIRMAN STANDARDS COMMITTEE APPROVED — JAN 01, 2017 DATE
DEPUTY DIRECTOR

CABLE BARRIER
W-BEAM
RIGHT SHOULDER
APPLICATION

STANDARD DRAWING TITLE

STD. DWG. NO.
BA 5H

DGN File: L:\Standard_Drawings\Imperial\2017 Approved\1-All Drawings\BA05H.dgn
28-NOV-2016

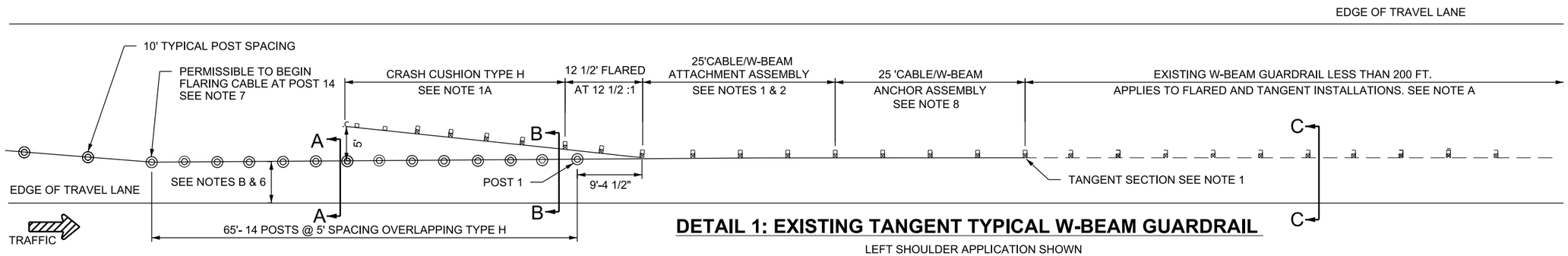

DETAIL 1: EXISTING TANGENT TYPICAL W-BEAM GUARDRAIL

LEFT SHOULDER APPLICATION SHOWN
RIGHT SHOULDER APPLICATION SIMILAR

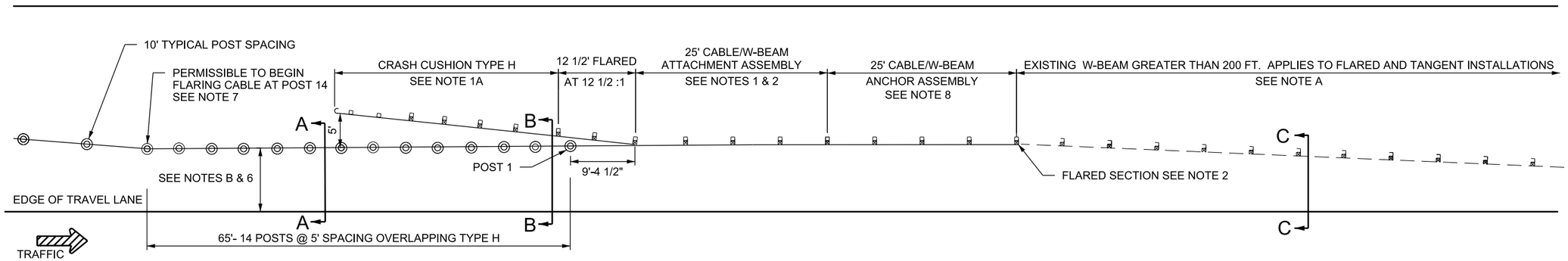

DETAIL 2: EXISTING FLARED TYPICAL W-BEAM GUARDRAIL

LEFT SHOULDER APPLICATION SHOWN
RIGHT SHOULDER APPLICATION SIMILAR

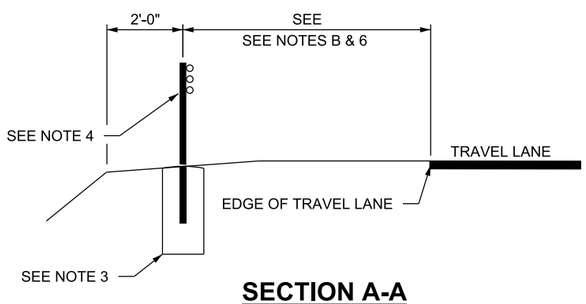

SECTION A-A

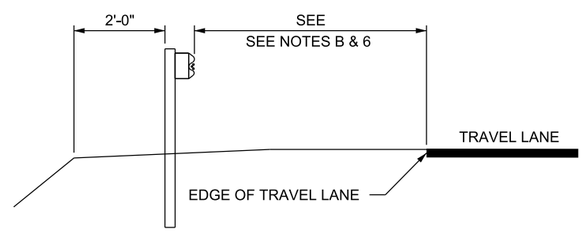

SECTION C-C

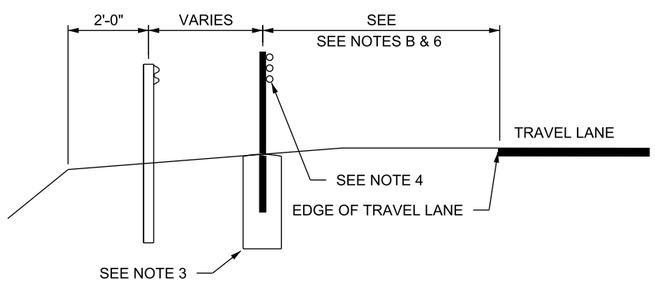

SECTION B-B

DESIGN-ONLY NOTES:

A. USE ON EXISTING W-BEAM GUARDRAIL SYSTEMS WHEN BARRIER SYSTEM MEETS STANDARD SPECIFICATION 02841 AND BA 4 SERIES STD DWGS FOR W-BEAM GUARDRAIL UNLESS OTHERWISE SPECIFIED. MINIMUM ACCEPTABLE HEIGHT FOR EXISTING W-BEAM GUARDRAIL IS 28 INCHES.
B. REFER TO STD DWG BA 5B1 & BA 5B2 FOR MAXIMUM AND MINIMUM OFFSET AND SLOPE REQUIREMENTS.

NOTES:

1. TANGENT INSTALLATIONS:
   A. REPLACE TYPE G END TREATMENT WITH 12 1/2 FT OF W-BEAM GUARDRAIL FLARED AT 12 1/2:1 AND A TYPE H END TREATMENT AS SPECIFIED IN THE GUIDELINES FOR CRASH CUSHION AND END TREATMENTS.
   B. NO CHANGE IS REQUIRED IF AN APPROVED TYPE H IS CURRENTLY INSTALLED.
   C. INSTALL CABLE ATTACHMENT RAIL ASSEMBLY TO EXISTING POSTS.
      1) REPLACE STEEL BLOCKS WITH MODIFIED WOOD BLOCKS IF EXISTING W-BEAM INSTALLATION HAS STEEL POSTS WITH STEEL BLOCKS.
      2) MEET MANUFACTURER'S REQUIREMENTS FOR CABLE ATTACHMENT RAIL AND ASSOCIATED HARDWARE. ATTACHMENT RAILS RANGE IN LENGTH FROM 6 FT 3 INCHES TO 25 FT.
   D. INSTALL STD DWG BA 5C1 CABLE/W-BEAM ANCHOR ASSEMBLY.
      1) LEAVE EXISTING POSTS IN PLACE WHEN ANCHOR ASSEMBLY FOUNDATIONS CAN BE INSTALLED WITHOUT REMOVING.
      2) REPLACE STEEL BLOCKS WITH MODIFIED WOOD BLOCKS IF EXISTING W-BEAM INSTALLATIONS HAS STEEL POSTS WITH STEEL BLOCKS.
2. FLARED INSTALLATIONS:
   A. REMOVE EXISTING END TREATMENT.
   B. INSTALL STD DWG BA 5C1 CABLE/W-BEAM ANCHOR ASSEMBLY, TANGENT TO THE ROADWAY.
   C. INSTALL CABLE ATTACHMENT RAIL ASSEMBLY TANGENT TO THE ROADWAY.
      1) MEET MANUFACTURER'S REQUIREMENTS FOR CABLE ATTACHMENT RAIL AND ASSOCIATED HARDWARE. ATTACHMENT RAILS RANGE IN LENGTH FROM 6 FT 3 INCHES TO 25 FT.
   D. INSTALL 12 1/2 FT TYPICAL W-BEAM FLARED AT 12 1/2:1 AND A TYPE H END TREATMENT.
3. INSTALL 12 INCH DIA X 42 INCH DEEP FOUNDATION. MEET ALL OTHER MANUFACTURER'S REQUIREMENTS FOR CAST IN PLACE CABLE POST FOUNDATIONS.
4. MEET MANUFACTURER'S REQUIREMENTS FOR CABLE HEIGHT AND SEPARATION.
5. TYPICAL W-BEAM GUARDRAIL AND END TREATMENT WILL BE PAID AS STANDARD PAY ITEMS.
6. SEE PLAN SET FOR PROJECT OFFSET REQUIREMENTS.
7. FLARE RATE: EQUAL TO OR FLATTER THAN 30:1 DESIRABLE; 20:1 MAXIMUM ACCEPTABLE.
8. REFER TO STD DWG BA 5C1 FOR ANCHOR ASSEMBLY REQUIREMENTS.

REVISIONS

NO.	DATE	APPR.	REMARKS

UTAH DEPARTMENT OF TRANSPORTATION
STANDARD DRAWINGS FOR ROAD AND BRIDGE CONSTRUCTION
SALT LAKE CITY, UTAH

RECOMMENDED FOR APPROVAL — JAN 01, 2017 DATE
CHAIRMAN STANDARDS COMMITTEE APPROVED — JAN 01, 2017 DATE
DEPUTY DIRECTOR

CABLE BARRIER WITH EXISTING W-BEAM APPROACH
STANDARD DRAWING TITLE

STD. DWG. NO.
BA 5I1

DGN File:L:\Standard Drawings\Imperial\2017 Approved\1-All Drawings\BA05I1.dgn
28-NOV-2016

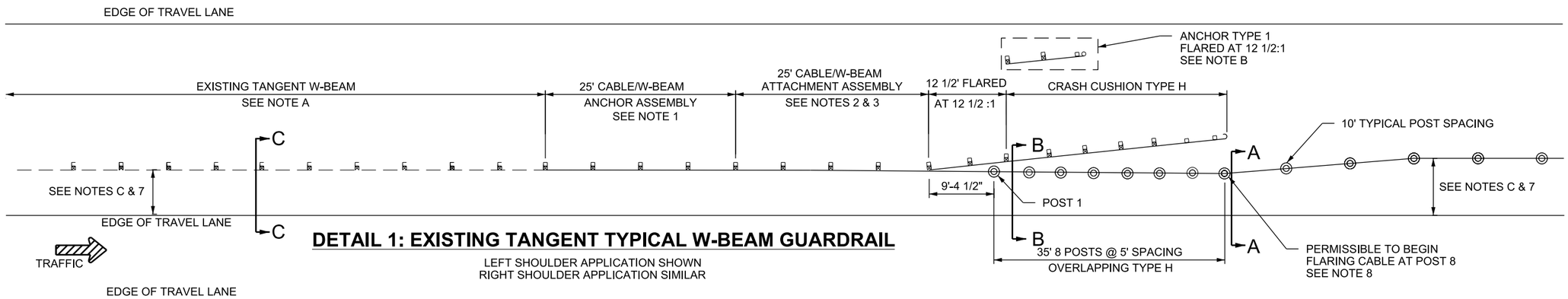

DETAIL 1: EXISTING TANGENT TYPICAL W-BEAM GUARDRAIL

LEFT SHOULDER APPLICATION SHOWN
RIGHT SHOULDER APPLICATION SIMILAR

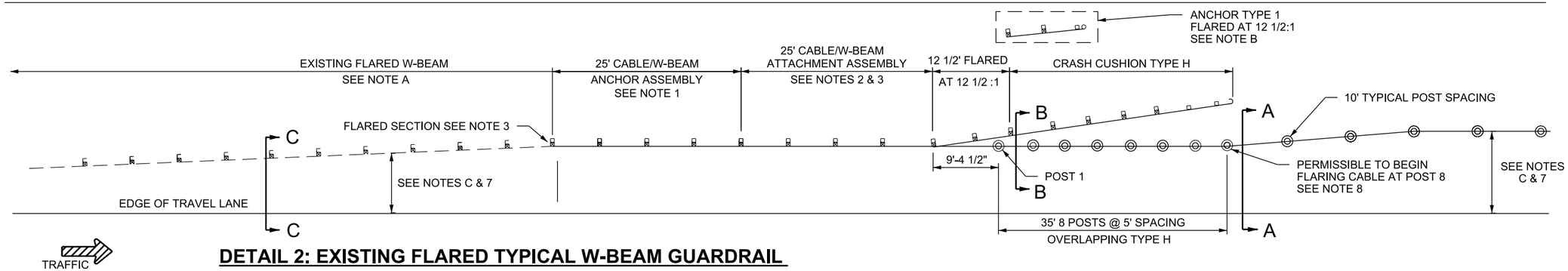

DETAIL 2: EXISTING FLARED TYPICAL W-BEAM GUARDRAIL

LEFT SHOULDER APPLICATION SHOWN
RIGHT SHOULDER APPLICATION SIMILAR

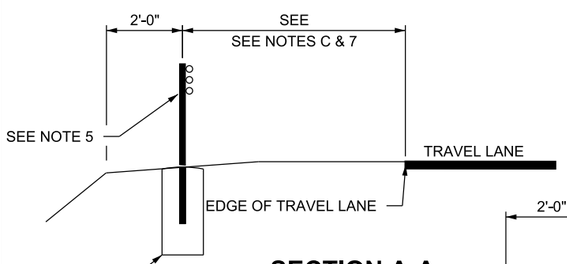

SECTION A-A

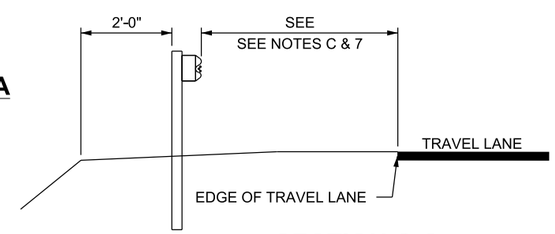

SECTION C-C

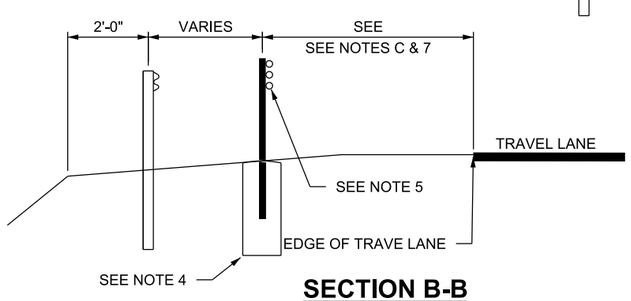

SECTION B-B

DESIGN-ONLY NOTES:

A. USE ON EXISTING W-BEAM GUARDRAIL SYSTEMS WHEN BARRIER SYSTEM MEETS STANDARD SPECIFICATION 02841 AND BA 4 SERIES STD DWGS FOR W-BEAM GUARDRAIL UNLESS OTHERWISE SPECIFIED. MINIMUM ACCEPTABLE HEIGHT FOR EXISTING W-BEAM GUARDRAIL IS 28 INCHES.
B. USE W-BEAM GUARDRAIL ANCHOR TYPE 1 WHEN ENGINEERING JUDGEMENT DETERMINES AN IMPACT FROM THE OPPOSING DIRECTION IS MINIMAL.
C. REFER TO STD DWG BA5B1 & BA5B2 FOR MAXIMUM AND MINIMUM OFFSET AND SLOPE REQUIREMENTS.

NOTES:

1. REFER TO STD DWG BA 5C1 FOR ANCHOR ASSEMBLY REQUIREMENTS.
2. TANGENT INSTALLATIONS:
   A. REPLACE ANCHORAGE SYSTEM OR TYPE G END TREATMENTS WITH 12 1/2 FT TYPICAL W-BEAM GUARDRAIL FLARED AT 12 1/2:1 AND A TYPE H END TREATMENT AS SPECIFIED IN THE GUIDELINES FOR CRASH CUSHION AND END TREATMENTS.
   B. NO CHANGE IS REQUIRED IF AN APPROVED TYPE H IS CURRENTLY INSTALLED.
   C. REMOVE AND INSTALL 12 1/2 FT TYPICAL W-BEAM GUARDRAIL FLARED AT 12 1/2:1 AND AN ANCHOR TYPE 1 OR TYPE H END TREATMENT AS PER CONDITIONS OF NOTE 2 IF AN ANCHOR TYPE 1 OR OLDER ANCHOR TYPE IS CURRENTLY INSTALLED.
   D. INSTALL CABLE ATTACHMENT RAIL ASSEMBLY TO EXISTING POSTS.
      1) REPLACE STEEL BLOCKS WITH MODIFIED WOOD BLOCKS IF EXISTING W-BEAM INSTALLATION HAS STEEL POSTS WITH STEEL BLOCKS.
      2) MEET MANUFACTURER'S REQUIREMENTS FOR CABLE ATTACHMENT RAIL. ATTACHMENT RAILS RANGE IN LENGTH FROM 6 FT 3 INCHES TO 25 FT.
   E. INSTALL CABLE/W-BEAM ANCHOR ASSEMBLY.
      1) EXISTING POSTS CAN BE LEFT IN PLACE WHEN ANCHOR ASSEMBLY FOUNDATIONS CAN BE INSTALLED WITHOUT REMOVING.
      2) REPLACE STEEL BLOCKS WITH MODIFIED WOOD BLOCKS IF EXISTING W-BEAM GUARDRAIL INSTALLATION HAS STEEL POSTS WITH STEEL BLOCKS.
3. FLARED INSTALLATIONS:
   A. REMOVE EXISTING ANCHORAGE SYSTEM OR END TREATMENT.
   B. INSTALL CABLE/W-BEAM ANCHOR ASSEMBLY, DETAIL D, TANGENT TO ROADWAY.
   C. INSTALL CABLE ATTACHMENT RAIL ASSEMBLY TANGENT TO THE ROADWAY.
      1) MEET MANUFACTURER'S REQUIREMENTS FOR CABLE ATTACHMENT RAIL. ATTACHMENT RAILS RANGE IN LENGTH FROM 6 FT 3 INCHES TO 25 FT.
      2) REPLACE STEEL BOCKS WITH MODIFIED WOOD BLOCKS IF EXISTING W-BEAM INSTALLATION HAS STEEL POSTS WITH STEEL BLOCKS.
      3) MEET MANUFACTURE'S REQUIREMENTS FOR CABLE ATTACHMENT RAIL AND ASSOCIATED HARDWARE.
   D. INSTALL 12 1/2 FT TYPICAL W-BEAM FLARED AT 12 1/2:1 AND A TYPE H END TREATMENT.
4. INSTALL 12 INCH DIA X 42 INCH DEEP FOUNDATION. MEET ALL OTHER MANUFACTURER'S REQUIREMENTS FOR CAST-IN-PLACE CABLE POST FOUNDATIONS.
5. MEET MANUFACTURER'S REQUIREMENTS FOR CABLE HEIGHT AND SEPARATION.
6. PAY TYPICAL W-BEAM GUARDRAIL OR END TREATMENT AS STANDARD PAY ITEMS.
7. SEE PLAN SET FOR PROJECT OFFSET REQUIREMENTS.
8. FLARE RATE: EQUAL TO OR FLATTER THAN 30:1 DESIRABLE; 20:1 MAXIMUM ACCEPTABLE.

REVISIONS

NO.	DATE	APPR.	REMARKS

UTAH DEPARTMENT OF TRANSPORTATION
STANDARD DRAWINGS FOR ROAD AND BRIDGE CONSTRUCTION
SALT LAKE CITY, UTAH

RECOMMENDED FOR APPROVAL — JAN 01, 2017 DATE
CHAIRMAN STANDARDS COMMITTEE APPROVED — JAN 01, 2017 DATE
DEPUTY DIRECTOR

CABLE BARRIER WITH EXISTING W-BEAM TRAILING END

STANDARD DRAWING TITLE

STD. DWG. NO.
BA 5I2

DGN File:L:\Standard_Drawings\Imperial\2017 Approved\1-All Drawings\BA05I2.dgn
28-NOV-2016

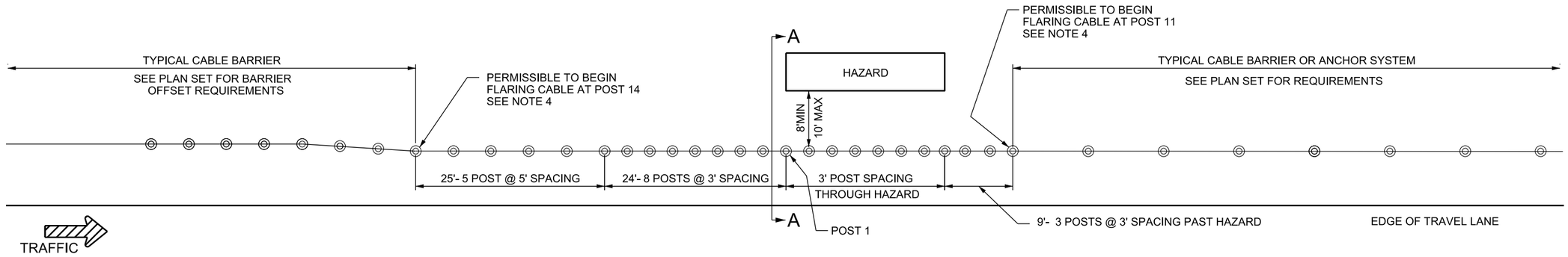

MEDIAN HAZARD PROTECTION WITH CABLE BARRIER

SEE NOTE 2

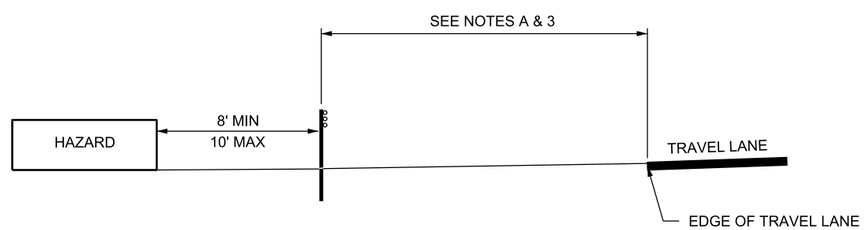

SECTION A-A

SEE NOTE 3

DESIGN-ONLY NOTES:

A. REFER TO STD DWG BA 5BA & BA 5B2 FOR OFFSET AND SLOPE REQUIREMENTS.

NOTES:

1. MINIMUM 8 FT DISTANCE FROM FACE OF HAZARD TO CABLE BARRIER REQUIRED.
2. USE 10 FT POST SPACING WHEN CABLE IS GREATER THAN 10 FT FROM HAZARD.
3. SEE PLAN SET FOR PROJECT OFFSET REQUIREMENTS.
4. FLARE RATE: FLATTER OR EQUAL TO 30:1 DESIRABLE, 20:1 MINIMUM ACCEPTABLE.
5. NOT PERMITTED TO PROTECT BRIDGE COLUMNS.

REVISIONS

NO.	DATE	APPR.	REMARKS

UTAH DEPARTMENT OF TRANSPORTATION
STANDARD DRAWINGS FOR ROAD AND BRIDGE CONSTRUCTION
SALT LAKE CITY, UTAH

RECOMMENDED FOR APPROVAL — JAN.01.2017 DATE
CHAIRMAN STANDARDS COMMITTEE APPROVED — JAN.01.2017 DATE
DEPUTY DIRECTOR

CABLE BARRIER MEDIAN HAZARD PROTECTION

STANDARD DRAWING TITLE

STD. DWG. NO.
BA 5J1

28-NOV-2016 DGN File:L:\Standard Drawings\Imperial\2017 Approved\1-All Drawings\BA05J1.dgn

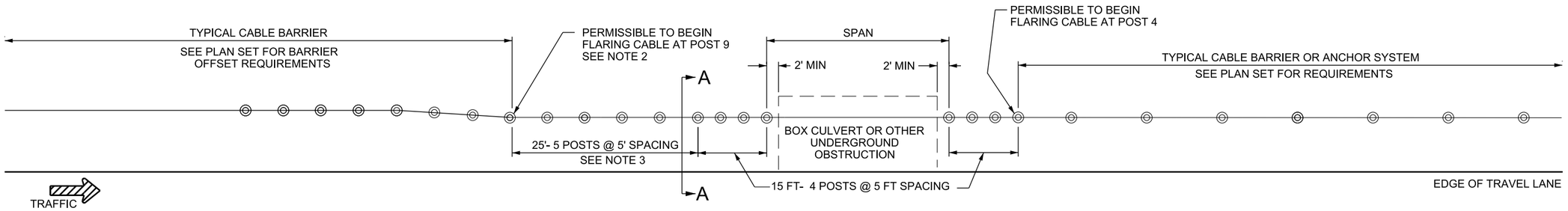

DETAIL A
SPAN ≥ 15 FT TO ≤ 30 FT

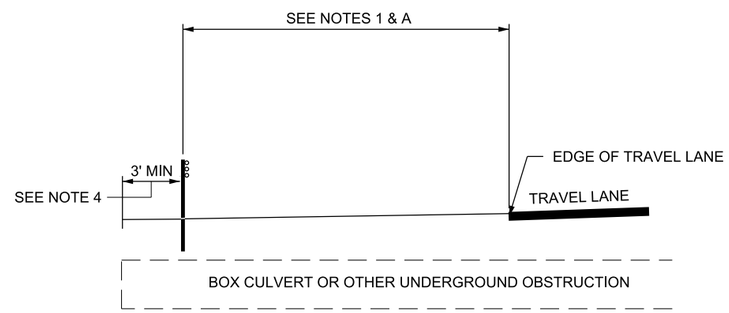

SECTION A-A

DESIGN-ONLY NOTES:

A. REFER TO STD DWG BA 5B1 & BA 5B2 FOR OFFSET AND SLOPE REQUIREMENTS.

NOTES:

1. SEE PLAN SET FOR PROJECT OFFSET REQUIREMENTS.
2. FLARE RATE: FLATTER OR EQUAL TO 30:1 DESIRABLE, 20:1 MINIMUM ACCEPTABLE.
3. USE TYPICAL 10 FT POST SPACING IF FLARE IS NOT REQUIRED.
4. MODIFY HEADWALL OR OTHER OBSTACLE TO A MAXIMUM OF 4 INCHES ABOVE GRADE.
5. SEE BA 5B SERIES STD DWGS FOR SPANS LESS THAN 15 FT.

NO.	DATE	APPR.	REMARKS

REVISIONS

UTAH DEPARTMENT OF TRANSPORTATION
STANDARD DRAWINGS FOR ROAD AND BRIDGE CONSTRUCTION
SALT LAKE CITY, UTAH

RECOMMENDED FOR APPROVAL — JAN 01, 2017 DATE

CHAIRMAN STANDARDS COMMITTEE APPROVED — JAN 01, 2017 DATE

DEPUTY DIRECTOR

STANDARD DRAWING TITLE

CABLE BARRIER
SPAN ≥ 15 FT TO ≤ 30 FT

STD. DWG. NO.

BA 5J2

28-NOV-2016 DGN File:L:\Standard Drawings\Imperial\2017 Approved\1-All Drawings\BA05J2.dgn

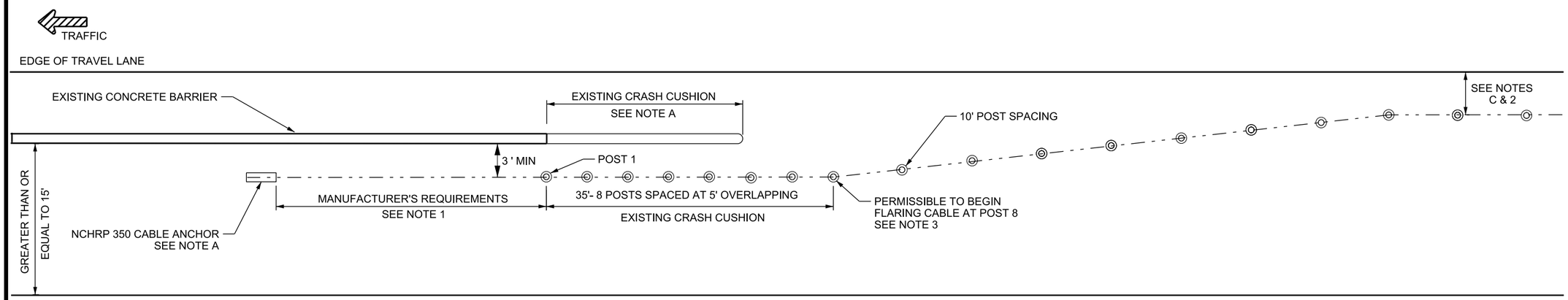

PLAN VIEW DETAIL A

SEE NOTE 1

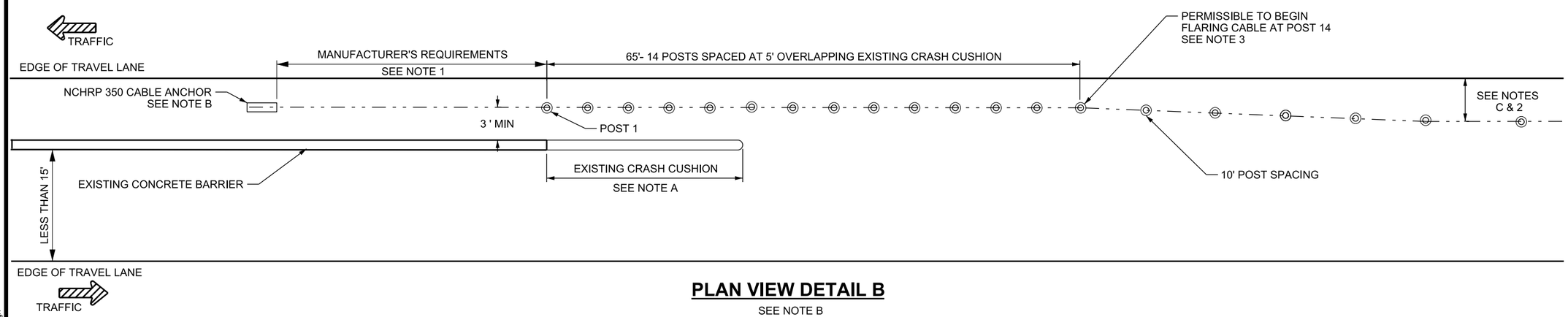

PLAN VIEW DETAIL B

SEE NOTE B

CABLE BARRIER WITH EXISTING CRASH CUSHION MEDIAN APPLICATION

DESIGN-ONLY NOTES

A. USE THIS APPLICATION WHEN THERE IS CONCRETE MEDIAN BARRIER WITH EXISTING TYPE A, B, C OR D CRASH CUSHION AND THE BARRIER IS A MINIMUM 15 FT FROM EDGE OF OPPOSING TRAVEL LANE. REFER TO THE GUIDELINES FOR CUSHIONS AND END TREATMENTS.
B. USE THIS APPLICATION ON CABLE TRAILING END OF THE NEAREST APPROACH TRAFFIC LANE WHEN THERE IS CONCRETE MEDIAN BARRIER WITH AN EXISTING TYPE A, B, C OR D CRASH CUSHION, AND THE BARRIER IS LESS THAN 15 FT FROM EDGE OF TRAVEL LANE OF THE OPPOSING TRAFFIC. REFER TO THE GUIDELINES FOR CRASH CUSHIONS AND END TREATMENTS.
C. REFER TO STD DWG BA 5C1 FOR CABLE SLOPE AND OFFSET .

NOTES:

1. INSTALL SYSTEM SPECIFIC NCHRP 350 APPROVED TERMINAL AS PER MANUFACTURER'S REQUIREMENT.
2. REFER TO PLAN SET FOR PROJECT MEDIAN CABLE OFFSET.
3. FLARE RATE: EQUAL TO OR FLATTER THAN 30:1 DESIRABLE; 20:1 MAXIMUM ACCEPTABLE.

REVISIONS

NO.	DATE	APPR.	REMARKS

UTAH DEPARTMENT OF TRANSPORTATION
STANDARD DRAWINGS FOR ROAD AND BRIDGE CONSTRUCTION
SALT LAKE CITY, UTAH

RECOMMENDED FOR APPROVAL — JAN 01, 2017 DATE
CHAIRMAN STANDARDS COMMITTEE APPROVED — JAN 01, 2017 DATE
DEPUTY DIRECTOR

CABLE BARRIER WITH EXISTING CRASH CUSHION MEDIAN APPLICATION
STANDARD DRAWING TITLE

STD. DWG. NO.
BA 5K

DGN File:L:\Standard_Drawings\Imperial\2017 Approved\1-All Drawings\BA05Kc.dgn
28-NOV-2016

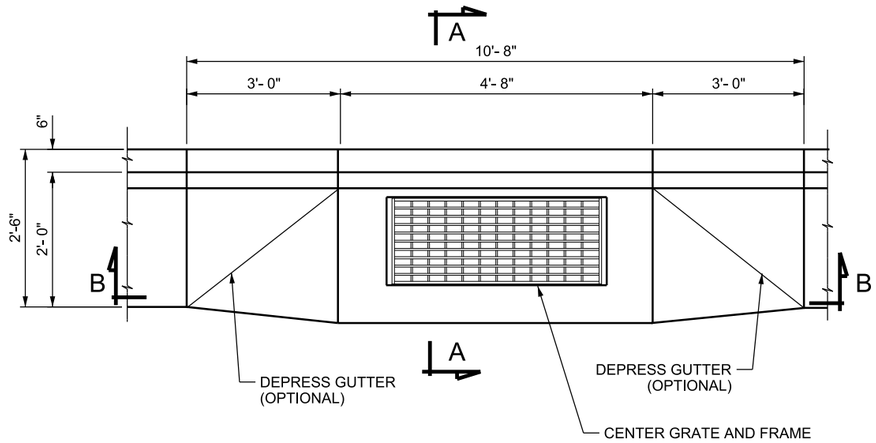

PLAN

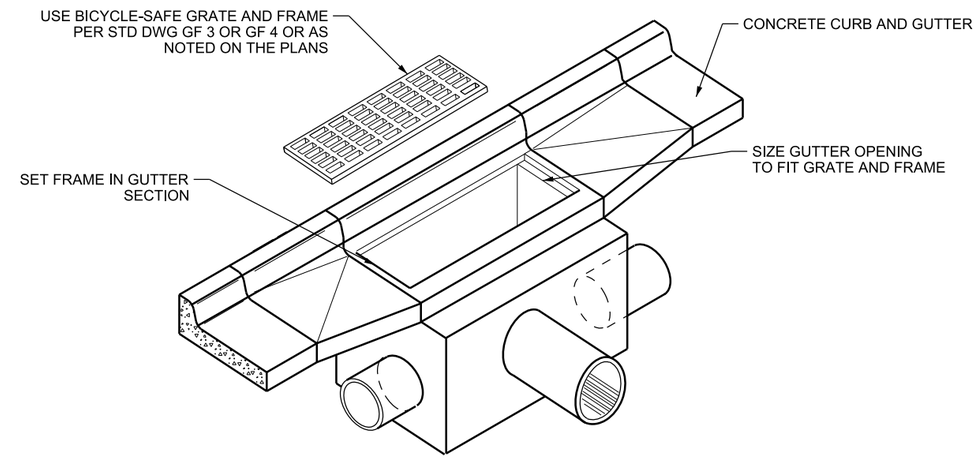

ISOMETRIC VIEW

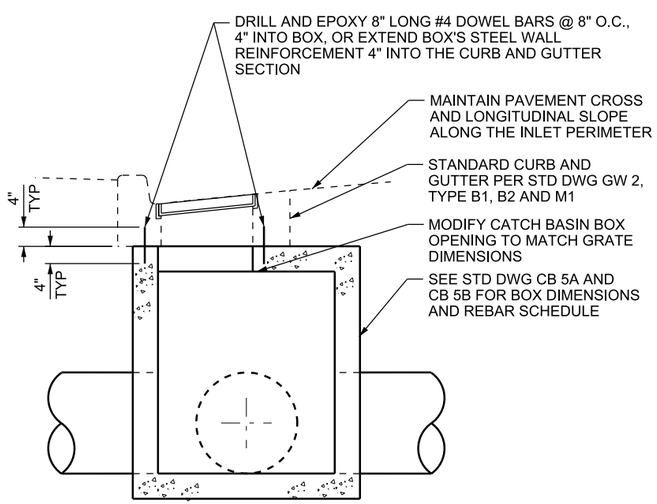

SECTION A-A

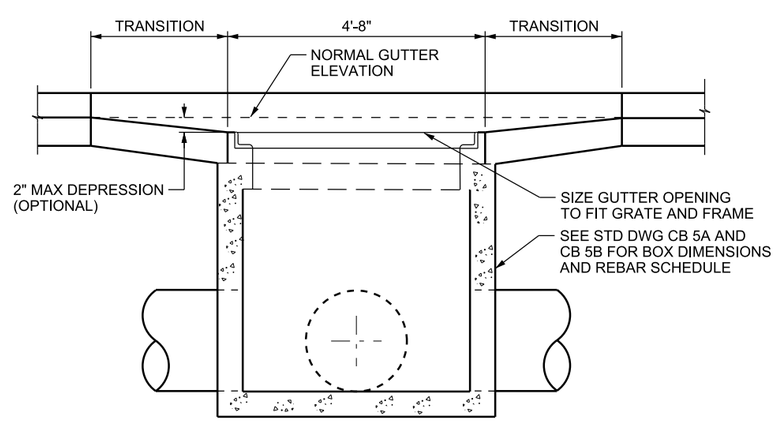

SECTION B-B

DESIGN DATA

HL-93 IN ACCORDANCE WITH AASHTO LRFD BRIDGE DESIGN AND INTERIM SPECIFICATIONS

STRUCTURAL STEEL: Fy = 36,000 psi

STRUCTURAL CONCRETE: f 'c = 4,000 psi; fy = 60,000 psi; n = 8

NOTES

1. USE COATED DEFORMED-CARBON REINFORCING STEEL BARS CONFORMING TO AASHTO M 284 OR M 111 AND M 31 GRADE 60 RESPECTIVELY.
2. FIELD CUT AND BEND REINFORCING STEEL AS NECESSARY TO CLEAR PIPES AND MAINTAIN 2 INCH COVER. REPAIR ANY DAMAGE OR CUTS TO THE COATING ON REINFORCING BARS.
3. USE CLASS AA (AE) CONCRETE.
4. USE TYPE II CEMENT (LOW ALKALI).
5. PROVIDE 2 INCH CONCRETE COVER TO REINFORCING STEEL.
6. SEE ROADWAY PLANS FOR NUMBER, LOCATION, AND SIZE OF PIPE.
7. PROVIDE 3/4 INCH CHAMFER ON ALL EXPOSED CONCRETE CORNERS.
8. SEE STD DWG GF 3 OR GF 4 FOR GRATE AND FRAME.

REVISIONS

NO.	DATE	APPR.	REMARKS

UTAH DEPARTMENT OF TRANSPORTATION
STANDARD DRAWINGS FOR ROAD AND BRIDGE CONSTRUCTION
SALT LAKE CITY, UTAH

RECOMMENDED FOR APPROVAL — JAN.01, 2017 DATE
CHAIRMAN STANDARDS COMMITTEE APPROVED — JAN.01, 2017 DATE
DEPUTY DIRECTOR

CURB AND GUTTER INLET
STANDARD DRAWING TITLE

STD. DWG. NO.
CB 1

DGN File: L:\Standard Drawings\Imperial\2017 Approved\1-All Drawings\CB01.dgn
28-NOV-2016

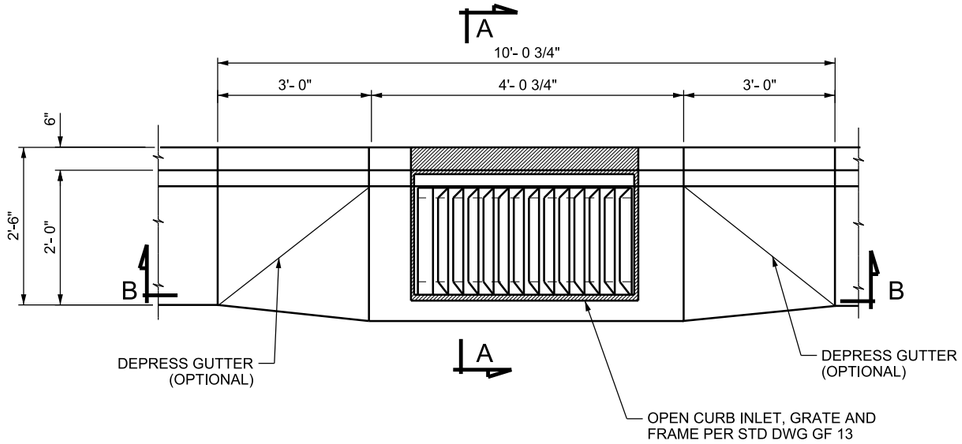

PLAN

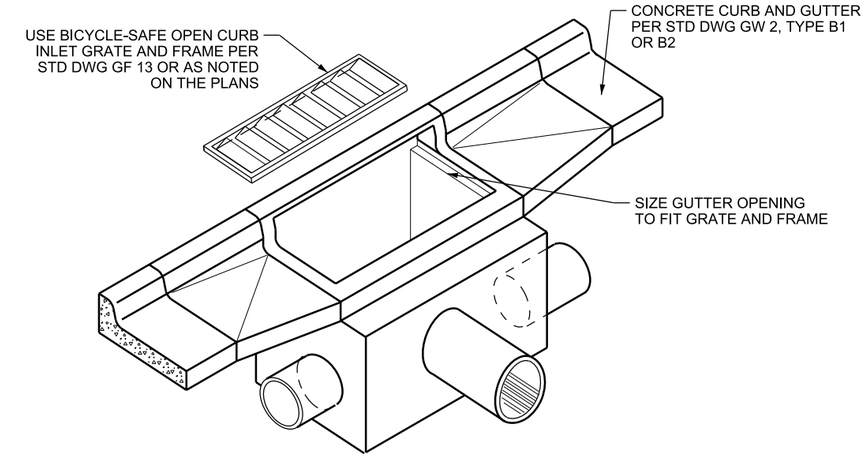

ISOMETRIC VIEW

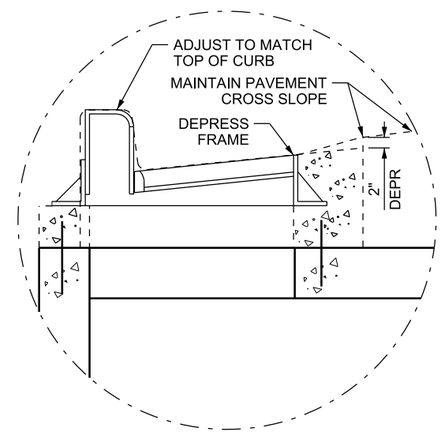

CURB DEPRESSION DETAIL

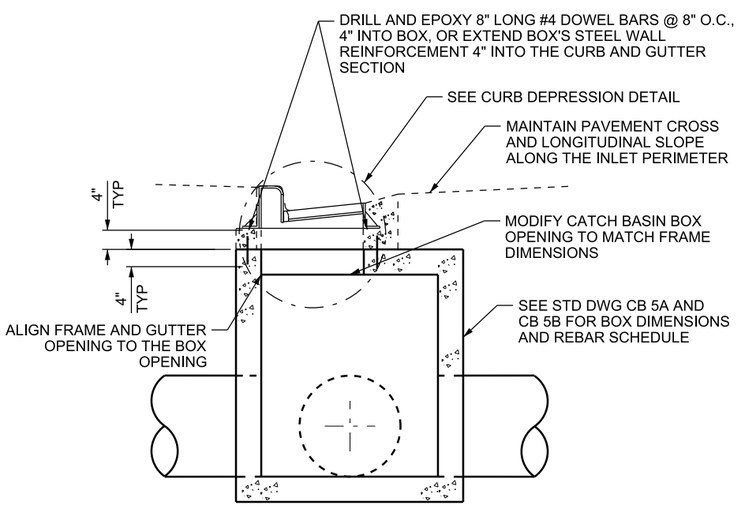

SECTION A-A

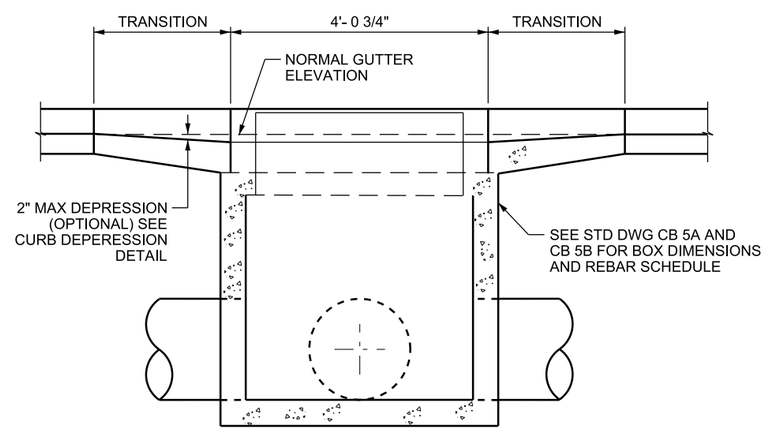

SECTION B-B

DESIGN DATA

HL-93 IN ACCORDANCE WITH AASHTO LRFD BRIDGE DESIGN AND INTERIM SPECIFICATIONS

STRUCTURAL STEEL: Fy = 36,000 psi

STRUCTURAL CONCRETE: f 'c = 4,000 psi; fy = 60,000 psi; n = 8

NOTES

1. USE COATED DEFORMED-CARBON REINFORCING STEEL BARS CONFORMING TO AASHTO M 284 OR M 111 AND M 31 GRADE 60 RESPECTIVELY.
2. FIELD CUT AND BEND REINFORCING STEEL AS NECESSARY TO CLEAR PIPES AND MAINTAIN 2 INCH COVER. REPAIR ANY DAMAGE OR CUTS TO THE COATING ON REINFORCING BARS.
3. USE CLASS AA (AE) CONCRETE.
4. USE TYPE II CEMENT (LOW ALKALI).
5. PROVIDE 2 INCH CONCRETE COVER TO REINFORCING STEEL.
6. SEE ROADWAY PLANS FOR NUMBER, LOCATION, AND SIZE OF PIPE.
7. SEE PLANS FOR DEPRESSION DIMENSIONS.
8. PROVIDE 3/4 INCH CHAMFER ON ALL EXPOSED CONCRETE CORNERS.
9. SEE STD DWG GF 13 FOR GRATE AND FRAME.

NO.	DATE	APPR.	REMARKS

REVISIONS

UTAH DEPARTMENT OF TRANSPORTATION
STANDARD DRAWINGS FOR ROAD AND BRIDGE CONSTRUCTION
SALT LAKE CITY, UTAH

RECOMMENDED FOR APPROVAL — JAN.01.2017 DATE
CHAIRMAN STANDARDS COMMITTEE APPROVED — JAN.01.2017 DATE
DEPUTY DIRECTOR

STANDARD DRAWING TITLE
OPEN CURB INLET

STD. DWG. NO.
CB 2

DGN File:L:\Standard_Drawings\Imperial\2017 Approved\1-All Drawings\CB02.dgn
28-NOV-2016

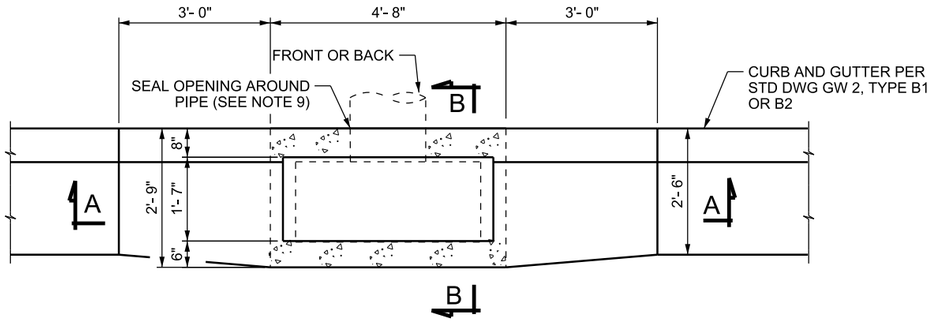

PLAN

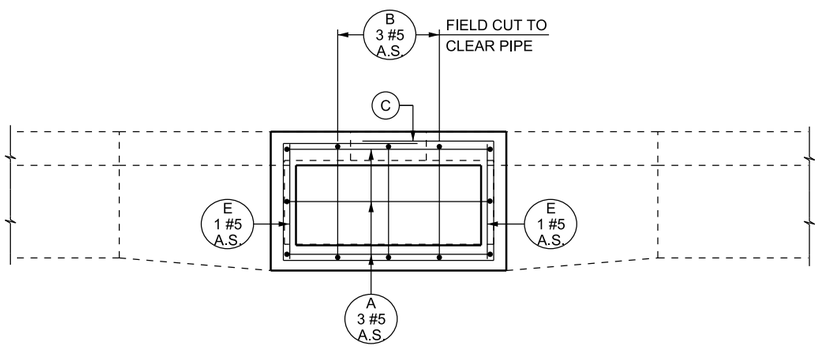

PLAN SECTION

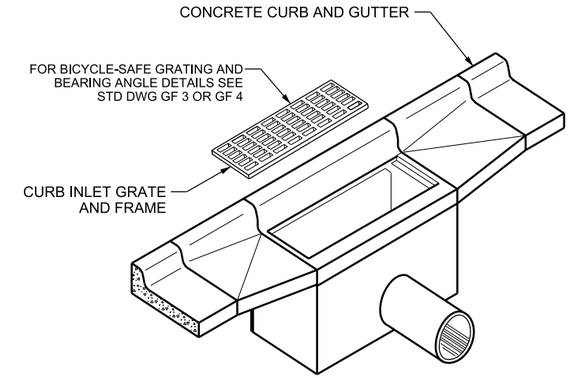

ISOMETRIC VIEW

REINFORCING STEEL LAYOUT

BAR A	BAR B	BAR C	BAR D	BAR E
		8"		

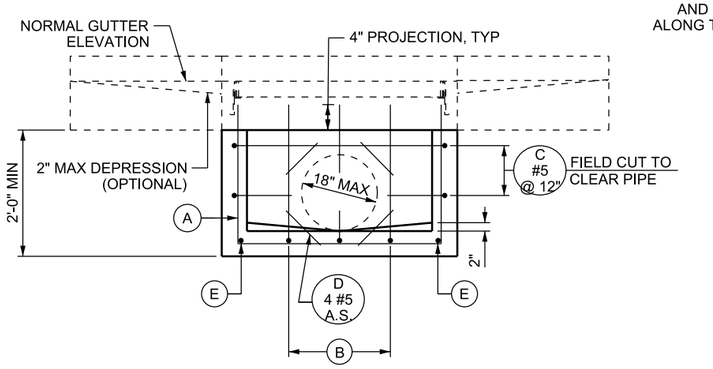

SECTION A-A

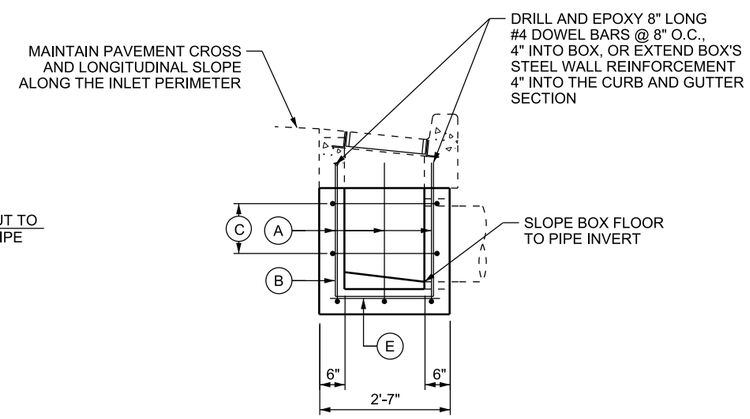

SECTION B-B

DESIGN DATA

HL-93 IN ACCORDANCE WITH AASHTO LRFD BRIDGE DESIGN AND INTERIM SPECIFICATIONS

STRUCTURAL STEEL: Fy = 36,000 psi

STRUCTURAL CONCRETE: f 'c = 4,000 psi; fy = 60,000 psi; n = 8

NOTES

1. USE COATED DEFORMED-CARBON REINFORCING STEEL BARS CONFORMING TO AASHTO M 284 OR M 111 AND M 31 GRADE 60 RESPECTIVELY.
2. FIELD CUT AND BEND REINFORCING STEEL AS NECESSARY TO CLEAR PIPES AND MAINTAIN 2 INCH COVER. REPAIR ANY DAMAGE OR CUTS TO THE COATING ON REINFORCING BARS.
3. USE CLASS AA (AE) CONCRETE.
4. USE TYPE II CEMENT (LOW ALKALI).
5. PROVIDE 2 INCH CONCRETE COVER TO REINFORCING STEEL.
6. SEE ROADWAY PLANS FOR NUMBER, LOCATION, AND SIZE OF PIPE.
7. PROVIDE 3/4 INCH CHAMFER ON ALL EXPOSED CONCRETE CORNERS.
8. SEE STD DWG GF 3 OR GF 4 FOR GRATE AND FRAME.
9. CENTER PIPE IN BOX OPENING. USE APPROVED NON-SHRINK GROUT TO SEAL OPENING AROUND PIPE OR USE APPROVED PIPE MANUFACTURER'S PIPE BOOT.
10. SIZE BOX HEIGHT TO MEET MINIMUM COVER FOR PIPE USED. SEE STD DWG DG 4.

REVISIONS

NO.	DATE	APPR.	REMARKS

UTAH DEPARTMENT OF TRANSPORTATION
STANDARD DRAWINGS FOR ROAD AND BRIDGE CONSTRUCTION
SALT LAKE CITY, UTAH

RECOMMENDED FOR APPROVAL — JAN.01, 2017 DATE
CHAIRMAN STANDARDS COMMITTEE APPROVED — JAN.01, 2017 DATE
DEPUTY DIRECTOR

SHALLOW CATCH BASIN
STANDARD DRAWING TITLE

STD. DWG. NO.
CB 3

DGN File: L:\Standard Drawings\Imperial\2017 Approved\1-All Drawings\CB03.dgn
28-NOV-2016

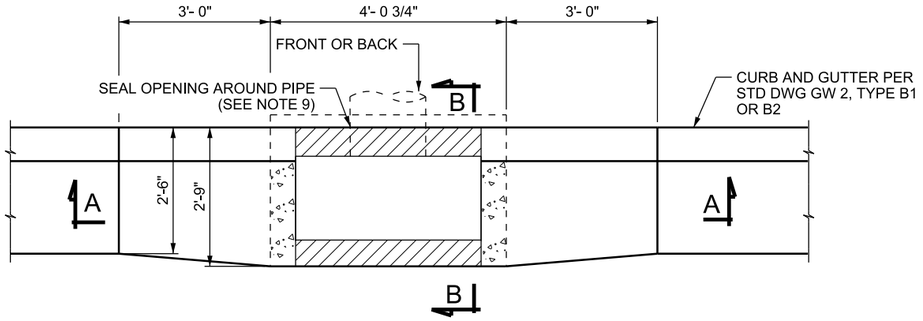

PLAN

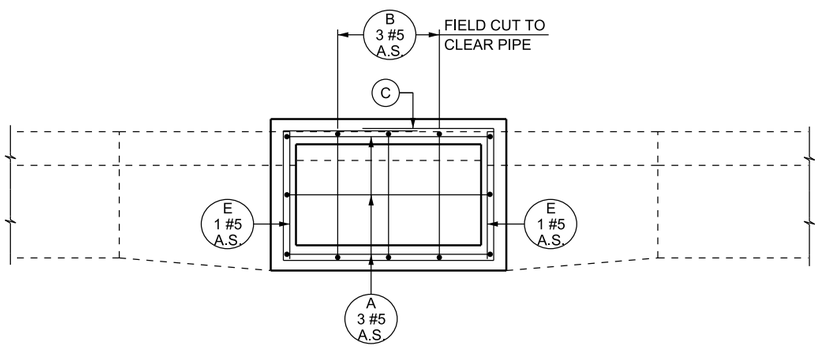

PLAN SECTION

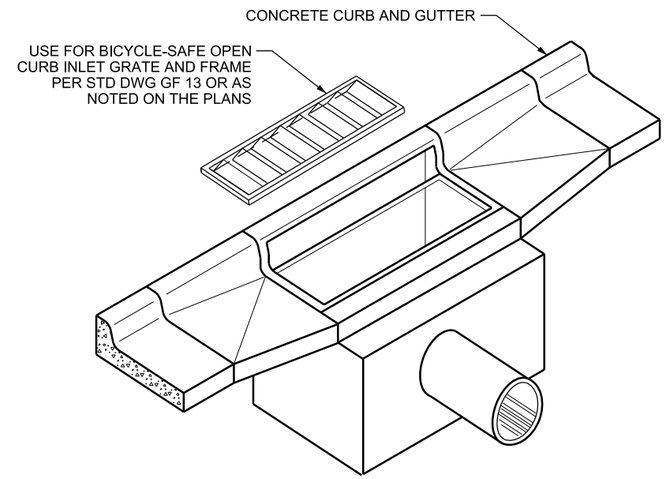

ISOMETRIC VIEW

REINFORCING STEEL LAYOUT				
BAR A	BAR B	BAR C	BAR D	BAR E
		8"		

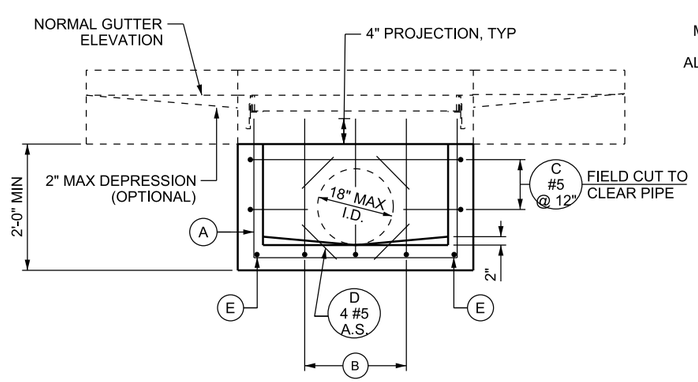

SECTION A-A

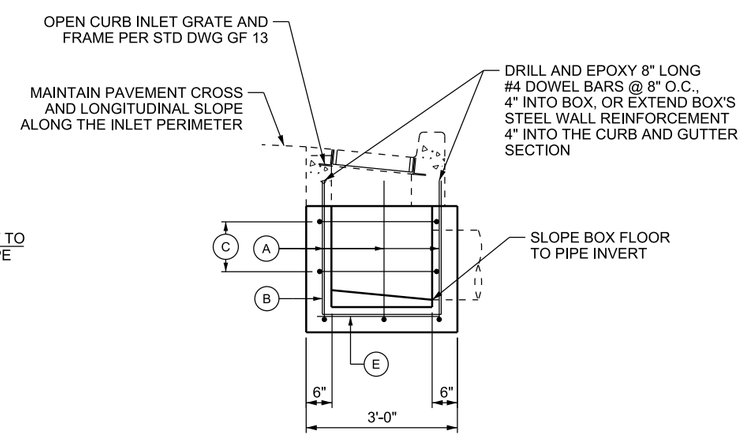

SECTION B-B

DESIGN DATA

HL-93 IN ACCORDANCE WITH AASHTO LRFD BRIDGE DESIGN AND INTERIM SPECIFICATIONS

STRUCTURAL STEEL: Fy = 36,000 psi

STRUCTURAL CONCRETE: f 'c = 4,000 psi; fy = 60,000 psi; n = 8

NOTES

1. USE COATED DEFORMED-CARBON REINFORCING STEEL BARS CONFORMING TO AASHTO M 284 OR M 111 AND M 31 GRADE 60 RESPECTIVELY.
2. FIELD CUT AND BEND REINFORCING STEEL AS NECESSARY TO CLEAR PIPES AND MAINTAIN 2 INCH COVER. REPAIR ANY DAMAGE OR CUTS TO THE COATING ON REINFORCING BARS.
3. USE CLASS AA (AE) CONCRETE.
4. USE TYPE II CEMENT (LOW ALKALI).
5. PROVIDE 2 INCH CONCRETE COVER TO REINFORCING STEEL.
6. SEE ROADWAY PLANS FOR NUMBER, LOCATION, AND SIZE OF PIPES.
7. PROVIDE 3/4 INCH CHAMPFER ON ALL EXPOSED CONCRETE CORNERS.
8. SEE STD DWG GF 3 OR GF 4 FOR GRATE AND FRAME.
9. CENTER PIPE IN BOX OPENING. USE APPROVED NON-SHRINK GROUT TO SEAL OPENING AROUND PIPE OR USE APPROVED PIPE MANUFACTURER'S PIPE BOOT.
10. SIZE BOX HEIGHT TO MEET MINIMUM COVER FOR PIPE USED. SEE STD DWG DG 4.

REVISIONS

NO.	DATE	APPR.	REMARKS

UTAH DEPARTMENT OF TRANSPORTATION
STANDARD DRAWINGS FOR ROAD AND BRIDGE CONSTRUCTION
SALT LAKE CITY, UTAH

RECOMMENDED FOR APPROVAL — JAN.01, 2017 DATE
CHAIRMAN STANDARDS COMMITTEE
APPROVED — JAN.01, 2017 DATE
DEPUTY DIRECTOR

OPEN CURB
SHALLOW CATCH BASIN
STANDARD DRAWING TITLE

STD. DWG. NO.
CB 4

DGN File: L:\Standard Drawings\Imperial\2017 Approved\1-All Drawings\CB04.dgn
28-NOV-2016

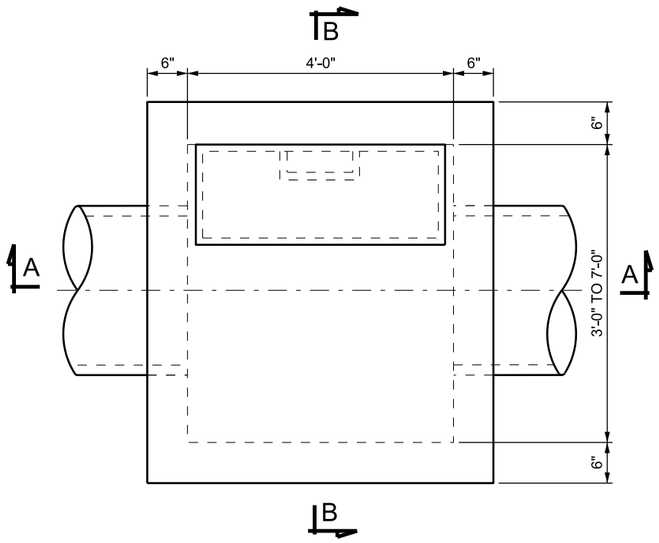

PLAN

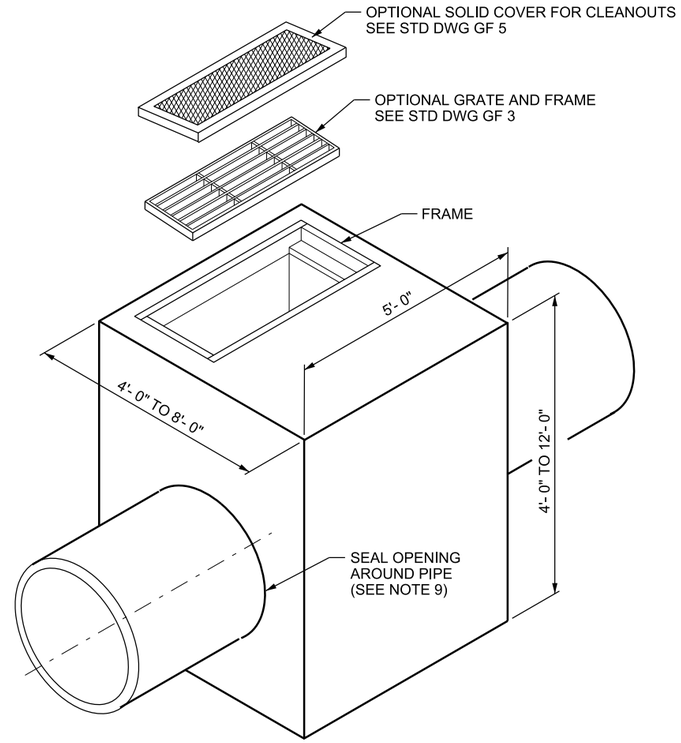

ISOMETRIC VIEW

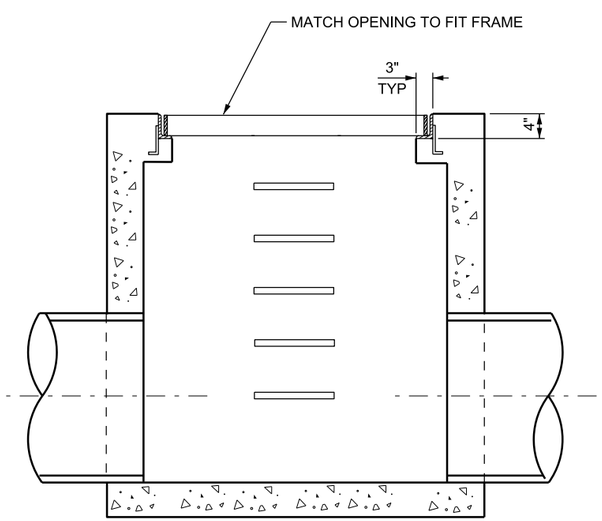

SECTION A-A

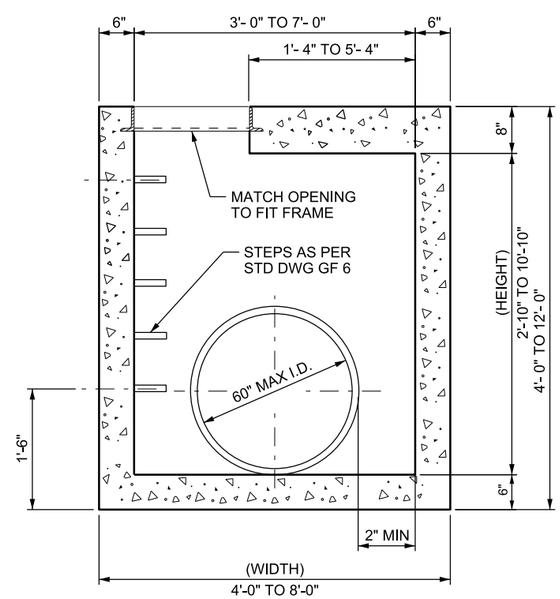

SECTION B-B

CATCH BASIN / CLEANOUT BOX

GRATE AND FRAME APPLICATION

QUANTITIES

(FOR DESIGN INFORMATION ONLY)

USE THE FOLLOWING EQUATIONS FOR CALCULATING VOLUME OF CONCRETE AND WEIGHT OF STEEL: (ENTER ALL DIMENSIONS IN FEET)

CONCRETE VOLUME

BOX WIDTHS OF 4 FT TO 8 FT AND DEPTHS OF 4 FT TO 12 FT

CONCRETE VOLUME (CU YDS) = (0.037*WIDTH+0.1853) *DEPTH+ (0.2161*WIDTH - 0.2811)

TO CALCULATE VOLUME OF CONCRETE OF PIPE HOLES VOLUME OF HOLES
(CU YDS) = 0.0083 * (PIPE DIAMETER) - 0.0929

WEIGHT OF REINFORCING STEEL

BOX WIDTHS OF 4 FT UP TO 8 FT AND DEPTHS OF 4 FT TO 12 FT

REBAR WEIGHT (LBS) = (4.101*WIDTH + 19.869) * DEPTH + (19.742 * WIDTH + 15.267)

DESIGN DATA

HL-93 IN ACCORDANCE WITH AASHTO LRFD BRIDGE DESIGN AND INTERIM SPECIFICATIONS

STRUCTURAL STEEL: Fy = 36,000 psi

STRUCTURAL CONCRETE: f 'c = 4,000 psi; fy = 60,000 psi; n = 8

NOTES

1. USE COATED DEFORMED-CARBON REINFORCING STEEL BARS CONFORMING TO AASHTO M 284 OR M 111 AND M 31 GRADE 60 RESPECTIVELY.
2. FIELD CUT AND BEND REINFORCING STEEL AS NECESSARY TO CLEAR PIPES AND MAINTAIN 2 INCH COVER. REPAIR ANY DAMAGE OR CUTS TO THE COATING ON REINFORCING BARS.
3. USE CLASS AA (AE) CONCRETE.
4. USE TYPE II CEMENT (LOW ALKALI).
5. PROVIDE 2 INCH CONCRETE COVER TO REINFORCING STEEL.
6. SEE ROADWAY PLANS FOR NUMBER, LOCATION, AND SIZE OF PIPE.
7. PROVIDE 3#4 INCH CHAMFER ON ALL EXPOSED CONCRETE CORNERS.
8. SEE STD DWG GF 3 OR GF 5 FOR GRATE AND FRAME.
9. CENTER PIPE IN BOX OPENING. USE APPROVED NON-SHRINK GROUT TO SEAL OPENING AROUND PIPE OR USE APPROVED PIPE MANUFACTURER'S PIPE BOOT.
10. SEE STD DWG CB 1 AND CB 2 FOR BOX ELEVATIONS FOR CURB AND GUTTER APPLICATION. INCLUDE CONCRETE QUANTITIES FOR CURB AND GUTTER IN ROADWAY QUANTITIES.
11. PLACE STEPS BEGINNING 2 FT BELOW FINISH GRADE AND PLACE ADDITIONAL STEPS ACCORDING TO STD DWG GF 6.
12. USE 8 INCH LONG, #4 BARS @ 8 INCH O.C. MAX. OR EXTEND BOX REBARS 4 INCHES INTO THE CURB AND GUTTER, TO ATTACH CURB AND GUTTER TO BOX.
13. SET EDGES OF THE BOX TO MATCH PAVEMENT FINISH GRADE AROUND THE BOX PERIMETER WHEN USING THE BOX AS AN INLET. SET TOP OF SURFACE TO MATCH PAVEMENT CROSS AND LONGITUDINAL SLOPE. RESET ANY BOXES WHERE BOX SURFACE OR GRATE AND FRAME IS NOT FLUSH WITH PAVEMENT. DO NOT EXCEED 1/4 INCH GRATE DEPRESSION.

REVISIONS

NO.	DATE	APPR.	REMARKS

UTAH DEPARTMENT OF TRANSPORTATION
STANDARD DRAWINGS FOR ROAD AND BRIDGE CONSTRUCTION
SALT LAKE CITY, UTAH

RECOMMENDED FOR APPROVAL — JAN.01, 2012 DATE
CHAIRMAN STANDARDS COMMITTEE APPROVED — JAN.01, 2012 DATE
DEPUTY DIRECTOR

STANDARD CATCH BASIN AND CLEANOUT BOX
STANDARD DRAWING TITLE

STD. DWG. NO.
CB 5A

DGN File: L:\Standard Drawings\Imperial\2017 Approved\1-All Drawings\CB05A.dgn
28-NOV-2016

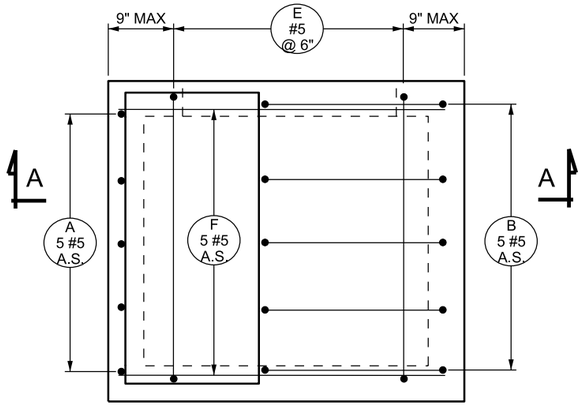

PLAN - TOP SLAB

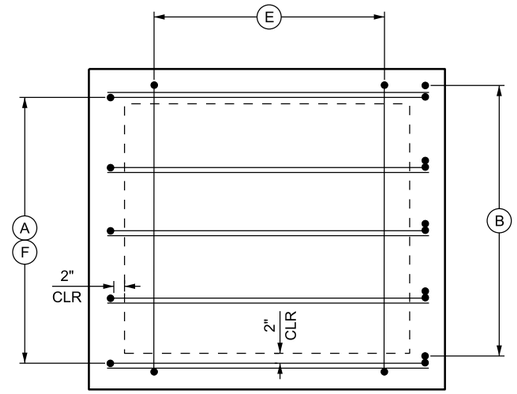

PLAN - BOTTOM SLAB

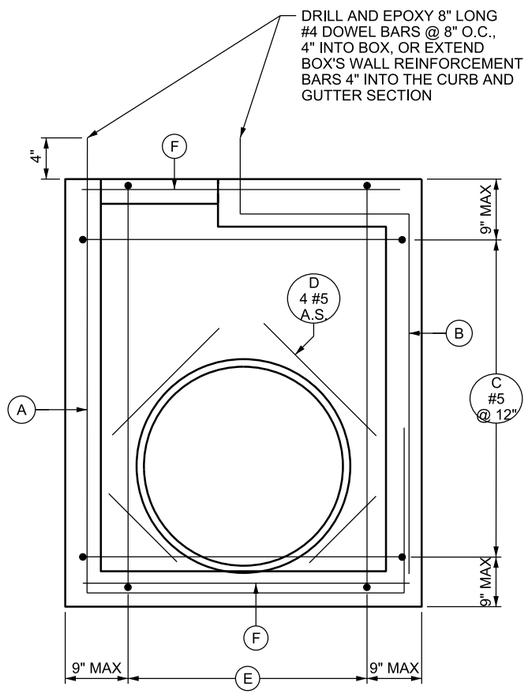

SECTION A-A

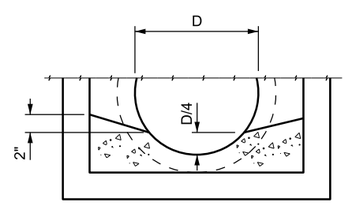

FORMED INVERT

REINFORCING STEEL LAYOUT

BAR A	BAR B	BAR C	BAR D	BAR E	BAR F
		8"		8"	

NOTES

1. PROVIDE FORMED INVERT AS SHOWN IN THE DETAIL ON THIS SHEET.
2. FIELD CUT AND BEND REINFORCING STEEL AS NECESSARY TO CLEAR PIPES AND GRATE OPENINGS, AND MAINTAIN 2 INCH COVER.
3. SEE STD DWG CB 5A FOR ALLOWABLE DIMENSIONS.
4. MAXIMUM PIPE DIMENSIONS ARE FOR PIPES PERPENDICULAR TO WALLS OF BOX, DETERMINE CLEARANCES FOR SKEWED PIPES.
5. SEE STD DWG GF 6 FOR MANHOLE STEP DETAILS.
6. PROVIDE 2 INCH CONCRETE COVER TO REINFORCING STEEL.
7. ALL REINFORCING BARS TO BE #5 BARS AT 12 INCHES UNLESS OTHERWISE SHOWN.
8. EXTEND BARS A AND B INTO CURB AND GUTTER WHEN CASTING FOR CATCH BASIN ON STD DWG CB 1 AND CB 2.

REVISIONS

NO.	DATE	APPR.	REMARKS

UTAH DEPARTMENT OF TRANSPORTATION
STANDARD DRAWINGS FOR ROAD AND BRIDGE CONSTRUCTION
SALT LAKE CITY, UTAH

RECOMMENDED FOR APPROVAL — JAN.01.2017 DATE
CHAIRMAN STANDARDS COMMITTEE APPROVED — JAN.01.2017 DATE
DEPUTY DIRECTOR

STANDARD DRAWING TITLE
STANDARD CATCH BASIN AND CLEANOUT BOX SECTION

STD. DWG. NO.
CB 5B

DGN File:L:\Standard Drawings\Imperial\2017 Approved\1-All Drawings\CB05B.dgn
28-NOV-2016

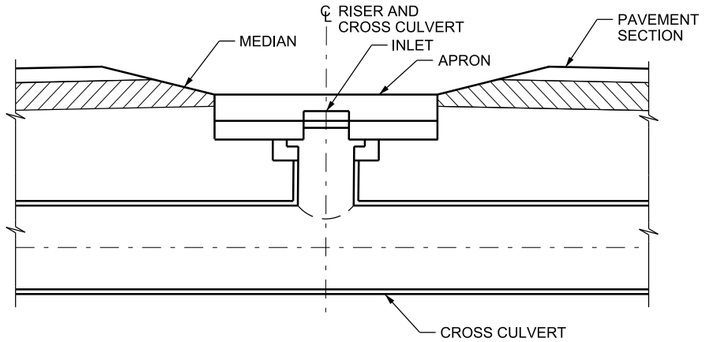

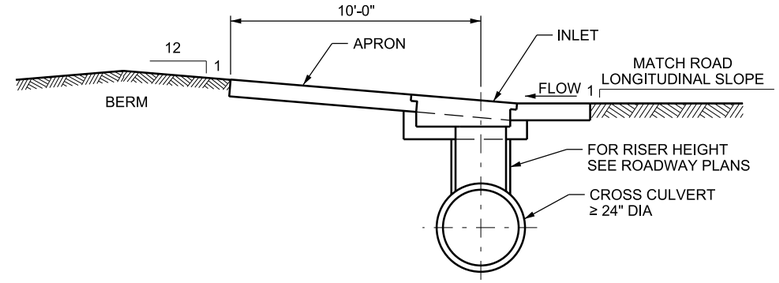

MEDIAN DROP INLET AND APRON SITUATION LAYOUT

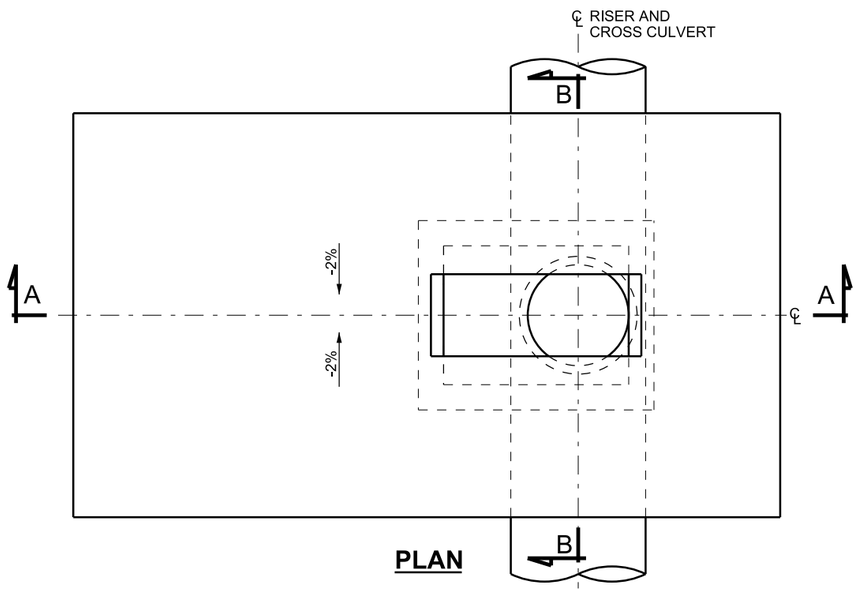

PLAN

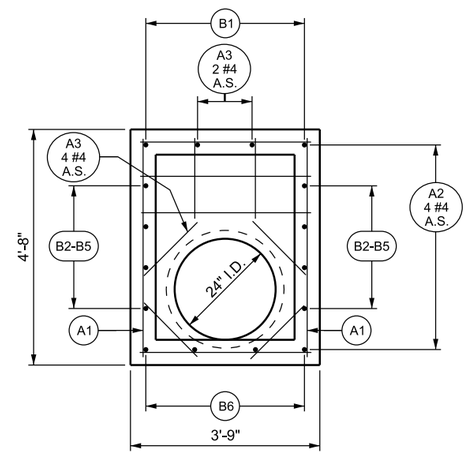

SECTION C-C

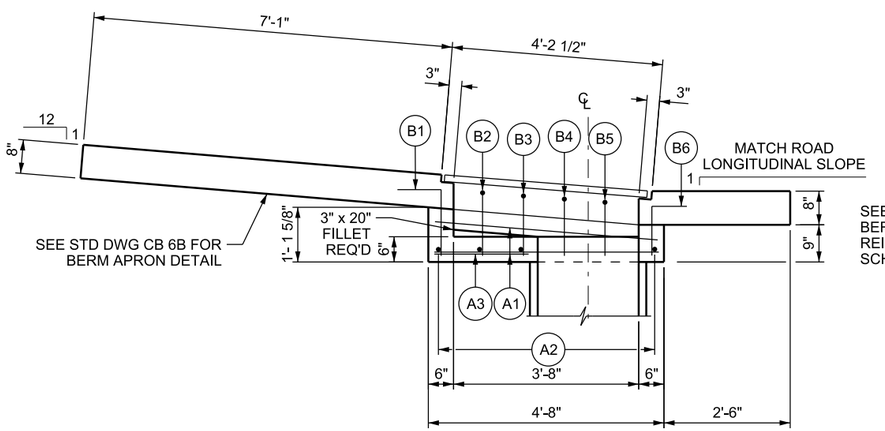

SECTION A-A

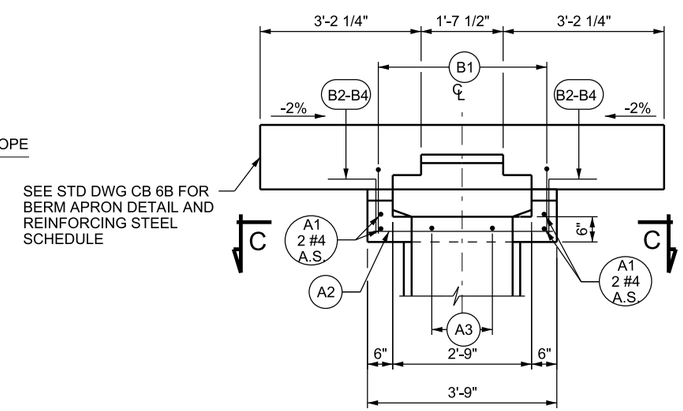

SECTION B-B

APRON DETAIL

SEE STD DWG CB 6B

QUANTITIES

SEE TABLES IN STD DWG CB 6B

DESIGN DATA

HL-93 IN ACCORDANCE WITH AASHTO LRFD BRIDGE DESIGN AND INTERIM SPECIFICATIONS

STRUCTURAL STEEL: Fy = 36,000 psi

STRUCTURAL CONCRETE: f 'c = 4,000 psi; fy = 60,000 psi; n = 8

NOTES

1. USE COATED DEFORMED-CARBON REINFORCING STEEL BARS CONFORMING TO AASHTO M 284 OR M 111 AND M 31 GRADE 60 RESPECTIVELY.
2. FIELD CUT AND BEND REINFORCING STEEL AS NECESSARY TO CLEAR PIPES AND MAINTAIN 2 INCH COVER. REPAIR ANY DAMAGE OR CUTS TO THE COATING ON REINFORCING BARS.
3. USE CLASS AA (AE) CONCRETE.
4. USE TYPE II CEMENT (LOW ALKALI).
5. PROVIDE 2 INCH CONCRETE COVER TO REINFORCING STEEL.
6. SEE STD DWG GF 3 FOR GRATE AND FRAME.
7. USE STRAIGHT #5 REINFORCING BARS AT 18 INCH OC, EXCEPT AS NOTED OTHERWISE.
8. USE 24 INCH DIA PIPE RISER UNLESS OTHERWISE SHOWN ON THE PLANS.
9. CONSTRUCT BERM AS PART OF DROP INLET.

REVISIONS

NO.	DATE	APPR.	REMARKS

UTAH DEPARTMENT OF TRANSPORTATION
STANDARD DRAWINGS FOR ROAD AND BRIDGE CONSTRUCTION
SALT LAKE CITY, UTAH

RECOMMENDED FOR APPROVAL — JAN.01.2017 DATE
CHAIRMAN STANDARDS COMMITTEE APPROVED — JAN.01.2017 DATE
DEPUTY DIRECTOR

STANDARD DRAWING TITLE
DROP INLET TYPE "A"

STD. DWG. NO.
CB 6A

DGN File: L:\Standard Drawings\Imperial\2017 Approved\1-All Drawings\CB06A.dgn
28-NOV-2016

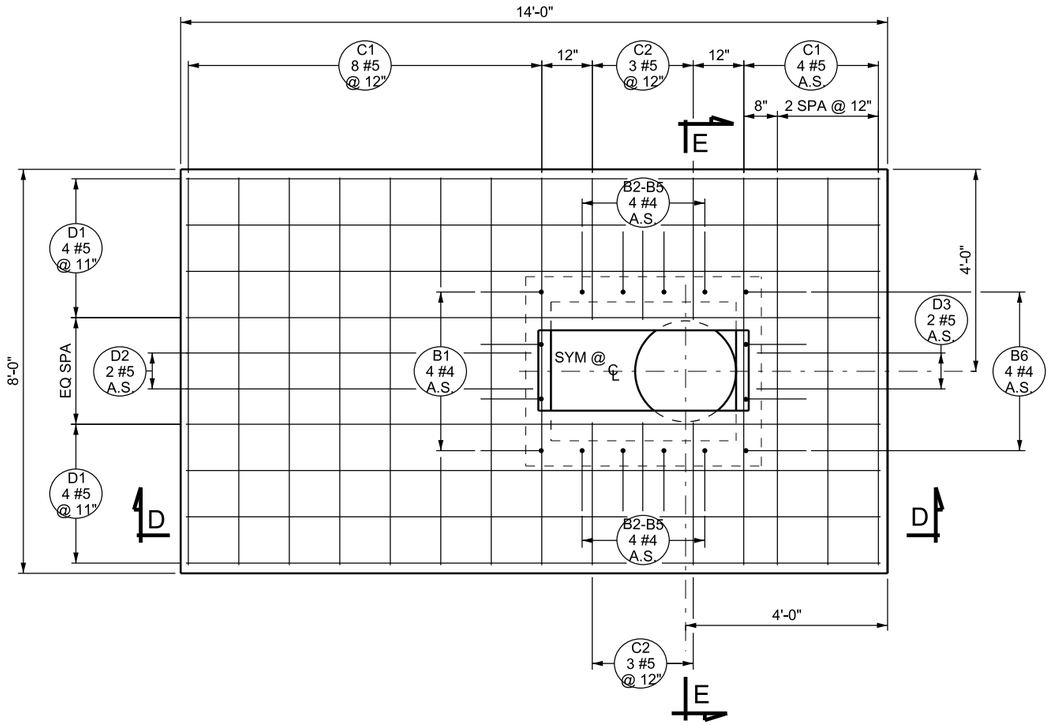

PLAN

REINFORCING STEEL SCHEDULE								
A1			A2			A3		
SIZE	———		SIZE	———		SIZE	———	
	NO	LENGTH		NO	LENGTH		NO	LENGTH
4	4	4'-4"	4	4	3'-5"	4	6	1'-6"

B1			B2			B3			B4			B5			B6		
SIZE	a 1'-2		SIZE	a 1'-2		SIZE	a 1'-2		SIZE	a 1'-2		SIZE	a 1'-2		SIZE	a 1'-2	
	NO	a		NO	a		NO	a		NO	a		NO	a		NO	a
4	4	1'-6"	4	2	1'-5"	4	2	1'-4"	4	2	1'-3"	4	2	1'-2"	4	4	1'-0"

C1			C2		
SIZE	———		SIZE	———	
	NO	LENGTH		NO	LENGTH
4	12	7'-8"	5	6	2'-10"

D1			D2			D3		
SIZE	———		SIZE	———		SIZE	———	
	NO	LENGTH		NO	LENGTH		NO	LENGTH
5	8	13'-8"	5	2	6'-11"	5	2	2'-8"

QUANTITIES (FOR INFORMATION ONLY)	
REINFORCING STEEL (LBS)	CONCRETE (CUBIC YDS)
300	2.7

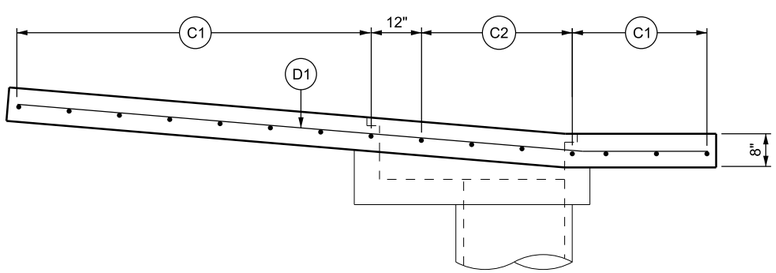

SECTION D-D

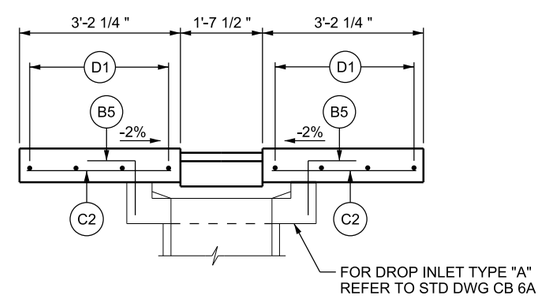

SECTION E-E

NOTES

1. CENTER APRON ON CHANNEL FLOWLINE.
2. PLACE 6 INCHES OF UNTREATED BASE COURSE AND COMPACT ACCORDING TO DEPARTMEMT STANDARD SPECIFICATIONS UNDER EACH APRON PRIOR TO FORMING.
3. FIELD BEND D1 BARS AS REQUIRED TO CONFORM TO SLOPE.
4. PROVIDE 2 INCH CONCRETE COVER TO REINFORCING STEEL EXCEPT WHERE NOTED OTHERWISE.
5. USE BERM APRON WITH DROP INLET TYPE "A."
6. REPAIR ANY DAMAGE OR CUTS TO REINFORCING STEEL COATING.

REVISIONS

NO.	DATE	APPR.	REMARKS

UTAH DEPARTMENT OF TRANSPORTATION
STANDARD DRAWINGS FOR ROAD AND BRIDGE CONSTRUCTION
SALT LAKE CITY, UTAH

RECOMMENDED FOR APPROVAL — JAN.01.2017 DATE
CHAIRMAN STANDARDS COMMITTEE APPROVED — JAN.01.2017 DATE
DEPUTY DIRECTOR

BERM APRON WITH DROP INLET TYPE "A"

STANDARD DRAWING TITLE

STD. DWG. NO.
CB 6B

28-NOV-2016 DGN File:L:\Standard Drawings\Imperial\2017 Approved\1-All Drawings\CB06B.dgn

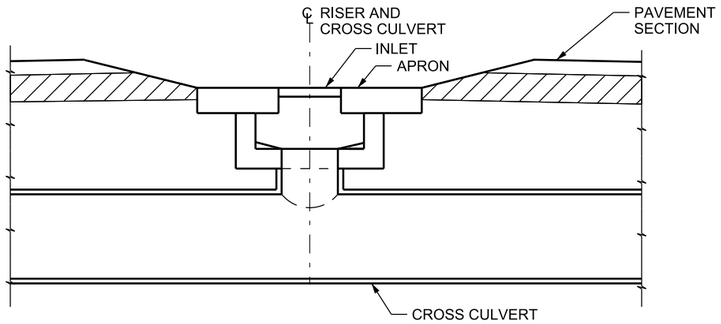

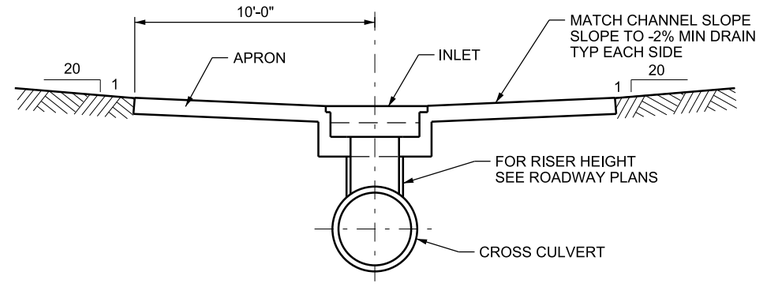

MEDIAN DROP INLET SITUATION LAYOUT

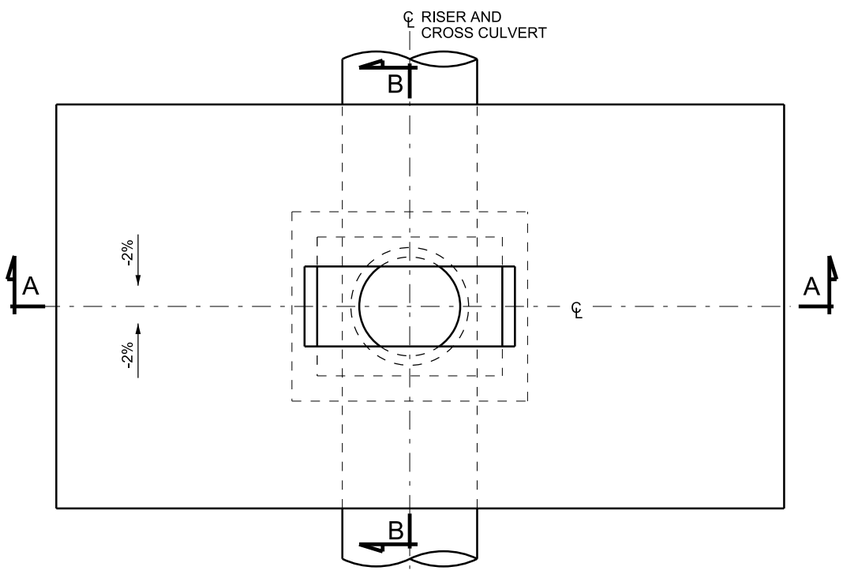

PLAN

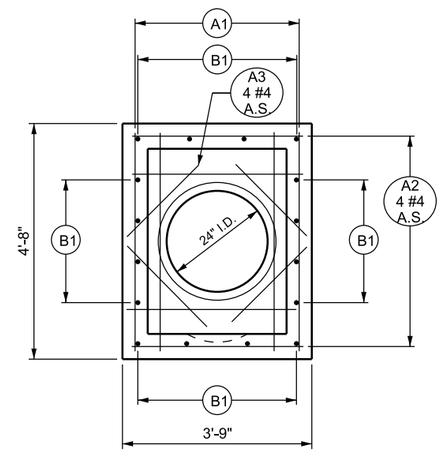

SECTION C-C

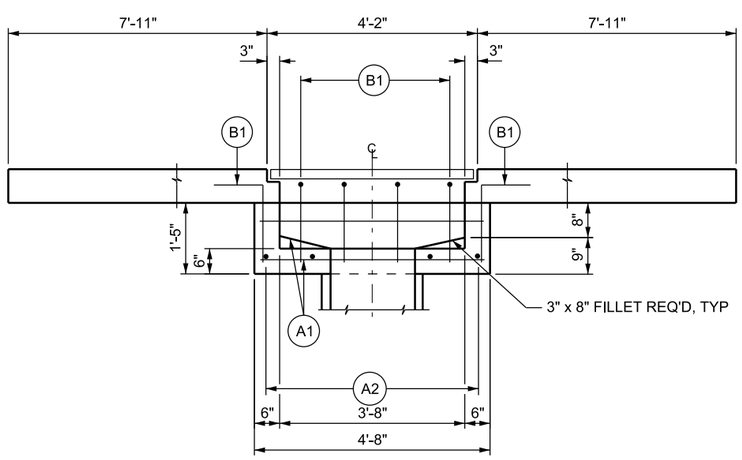

SECTION A-A

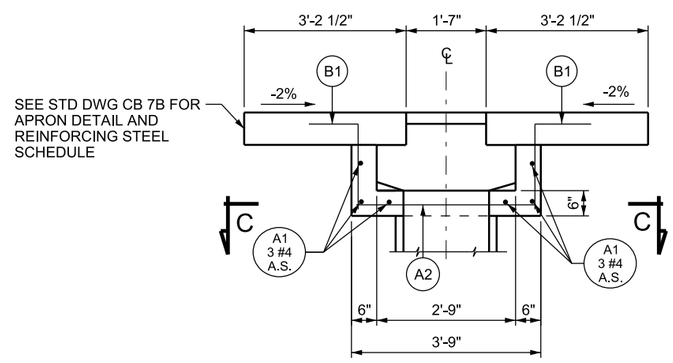

SECTION B-B

DESIGN DATA

HL-93 IN ACCORDANCE WITH AASHTO LRFD BRIDGE DESIGN AND INTERIM SPECIFICATIONS

STRUCTURAL STEEL: Fy = 36,000 psi

STRUCTURAL CONCRETE: f 'c = 4,000 psi; fy = 60,000 psi; n = 8

NOTES

1. USE COATED DEFORMED-CARBON REINFORCING STEEL BARS CONFORMING TO AASHTO M 284 OR M 111 AND M 31 GRADE 60 RESPECTIVELY.
2. FIELD CUT AND BEND REINFORCING STEEL AS NECESSARY TO CLEAR PIPES AND MAINTAIN 2 INCH COVER. REPAIR ANY DAMAGE OR CUTS TO THE COATING ON REINFORCING BARS.
3. USE CLASS AA (AE) CONCRETE.
4. USE TYPE II CEMENT (LOW ALKALI).
5. PROVIDE 2 INCH CONCRETE COVER TO REINFORCING STEEL.
6. USE STRAIGHT #5 REINFORCING BARS AT 18 INCH O.C., EXCEPT AS NOTED OTHERWISE.
7. SEE STD DWG GF 3 FOR GRATE AND FRAME.
8. USE 18 INCH DIA PIPE RISER UNLESS OTHERWISE SHOWN ON THE PLANS.

NO.	DATE	APPR.	REMARKS

REVISIONS

UTAH DEPARTMENT OF TRANSPORTATION
STANDARD DRAWINGS FOR ROAD AND BRIDGE CONSTRUCTION
SALT LAKE CITY, UTAH

RECOMMENDED FOR APPROVAL — JAN.01.2017 DATE
CHAIRMAN STANDARDS COMMITTEE APPROVED — JAN.01.2017 DATE
DEPUTY DIRECTOR

DROP INLET TYPE "B"

STANDARD DRAWING TITLE

STD. DWG. NO.
CB 7A

DGN File: L:\Standard_Drawings\Imperial\2017 Approved\1-All Drawings\CB07A.dgn
28-NOV-2016

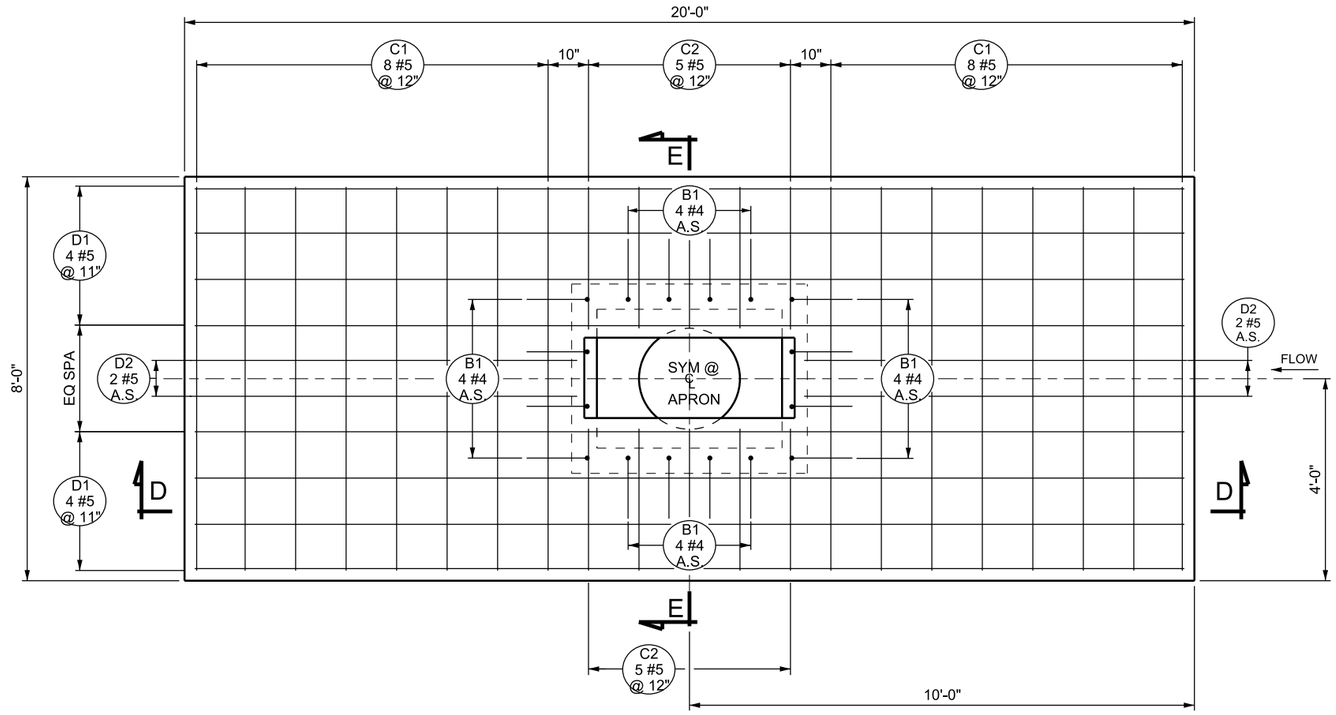

PLAN

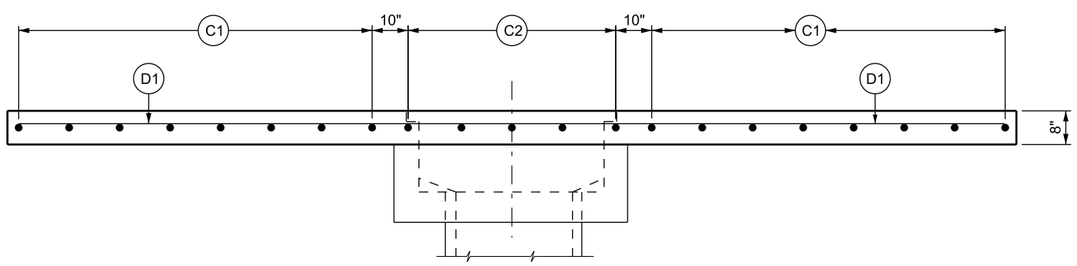

SECTION D-D

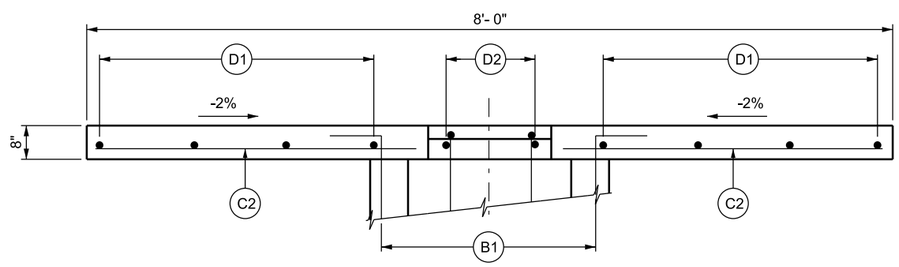

SECTION E-E

QUANTITIES (FOR INFORMATION ONLY)	
REINFORCING STEEL (LBS)	CONCRETE (CUBIC YDS)
603	3.9

REINFORCING STEEL SCHEDULE

A1			A2			A3		
SIZE	NO	LENGTH	SIZE	NO	LENGTH	SIZE	NO	LENGTH
4	6	4'-4"	4	4	3'-5"	4	4	2'-0"

B1		
SIZE	a 1'-2"	
	NO	a
4	12	VARIES

C1			C2		
SIZE	NO	LENGTH	SIZE	NO	LENGTH
5	16	19'-6"	5	10	2'-10"

D1			D2		
SIZE	NO	LENGTH	SIZE	NO	LENGTH
5	8	19'-8"	5	4	5'-5"

NOTES

1. CENTER APRON ON CHANNEL FLOWLINE.
2. PLACE 6 INCHES OF UNTREATED BASE COURSE AND COMPACT ACCORDING TO DEPARTMENT STANDARD SPECIFICATIONS UNDER EACH APRON PRIOR TO FORMING.
3. FIELD BEND D1 BARS AS REQUIRED TO CONFORM TO SLOPE.
4. PROVIDE 2 INCH CONCRETE COVER TO REINFORCING STEEL EXCEPT WHERE NOTED OTHERWISE.
5. USE NORMAL APRON WITH DROP INLET TYPE "B."
6. REPAIR ANY DAMAGE OR CUTS TO COATING ON REINFORCING BARS.

REVISIONS

NO.	DATE	APPR.	REMARKS

UTAH DEPARTMENT OF TRANSPORTATION
STANDARD DRAWINGS FOR ROAD AND BRIDGE CONSTRUCTION
SALT LAKE CITY, UTAH

RECOMMENDED FOR APPROVAL — JAN.01.2017 DATE
CHAIRMAN STANDARDS COMMITTEE APPROVED — JAN.01.2017 DATE
DEPUTY DIRECTOR

NORMAL APRON WITH DROP INLET TYPE "B"
STANDARD DRAWING TITLE

STD. DWG. NO.
CB 7B

DGN File:L:\Standard Drawings\Imperial\2017 Approved\1-All Drawings\CB07B.dgn
28-NOV-2016

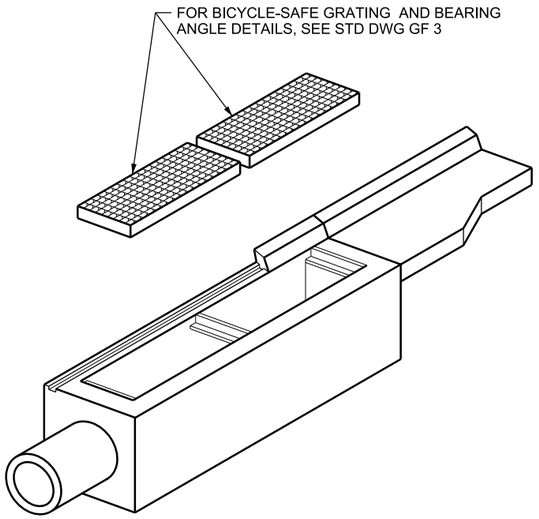

ISOMETRIC VIEW

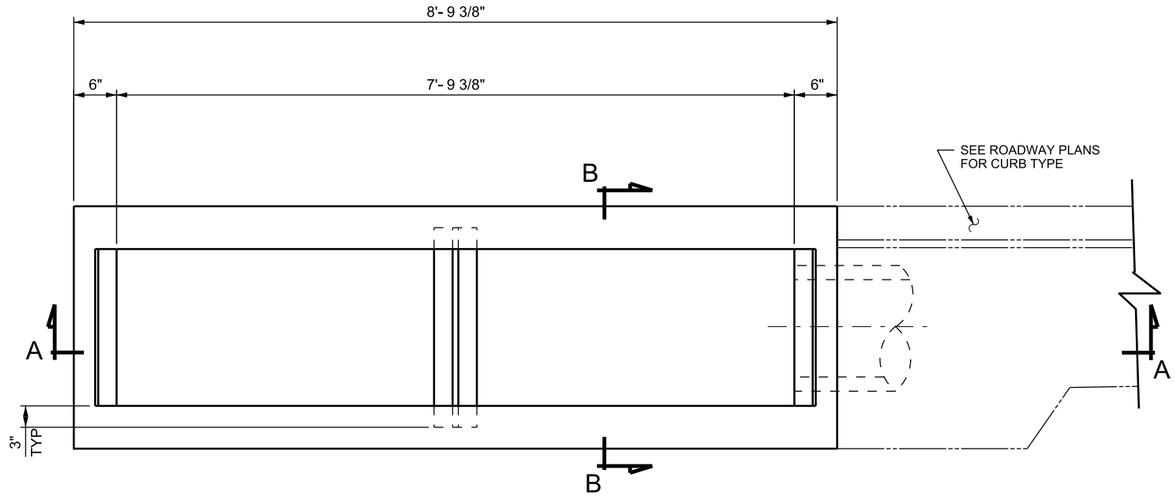

PLAN

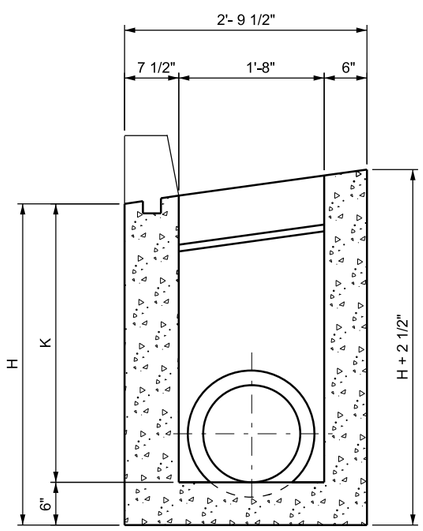

SECTION B-B

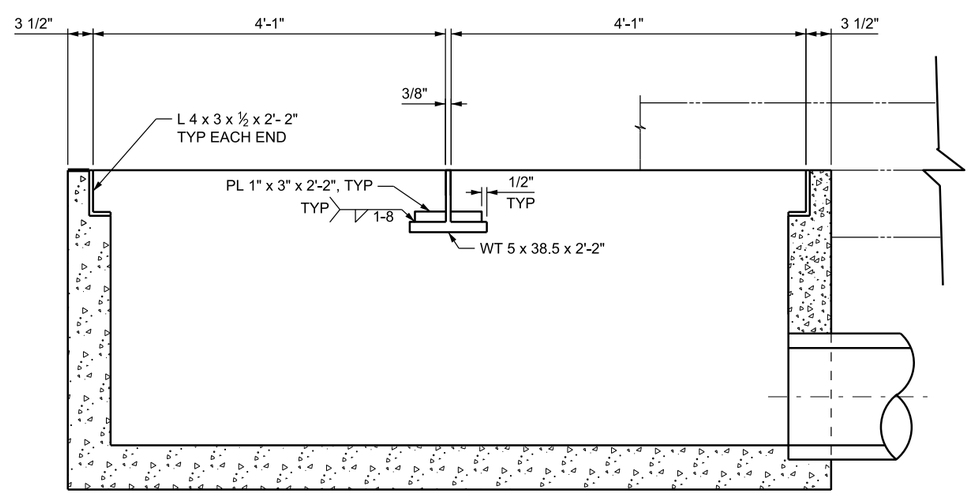

SECTION A-A

DESIGN DATA

HL-93 IN ACCORDANCE WITH AASHTO LRFD BRIDGE DESIGN AND INTERIM SPECIFICATIONS

STRUCTURAL STEEL: Fy = 36,000 psi
Fy = 50,000 psi (WT)

STRUCTURAL CONCRETE: f 'c = 4,000 psi; fy = 60,000 psi; n = 8

NOTES

1. USE COATED DEFORMED-CARBON REINFORCING STEEL BARS CONFORMING TO AASHTO M 284 OR M 111 AND M 31 GRADE 60 RESPECTIVELY.
2. FIELD CUT AND BEND REINFORCING STEEL AS NECESSARY TO CLEAR PIPES AND MAINTAIN 2 INCH COVER. REPAIR ANY DAMAGE OR CUTS TO THE COATING ON REINFORCING BARS.
3. USE CLASS AA (AE) CONCRETE.
4. USE TYPE II CEMENT (LOW ALKALI).
5. PROVIDE 2 INCH CONCRETE COVER TO REINFORCING STEEL.
6. SEE ROADWAY PLANS FOR NUMBER, LOCATION, AND SIZE OF PIPE.
7. PROVIDE 3/4 INCH CHAMFER ON ALL EXPOSED CONCRETE CORNERS.
8. SEE STD DWG GF 3 FOR GRATE AND FRAME.
9. HOT-DIP GALVANIZE GRATING AND BEARING ANGLES AFTER FABRICATION IN ACCORDANCE WITH AASHTO DESIGNATION M 111 (ASTM A 123).

REVISIONS

NO.	DATE	APPR.	REMARKS

UTAH DEPARTMENT OF TRANSPORTATION
STANDARD DRAWINGS FOR ROAD AND BRIDGE CONSTRUCTION
SALT LAKE CITY, UTAH

RECOMMENDED FOR APPROVAL — JAN.01, 2017 DATE
CHAIRMAN STANDARDS COMMITTEE — JAN.01, 2017 DATE
APPROVED — DEPUTY DIRECTOR

STANDARD DRAWING TITLE
DOUBLE CATCH BASIN

STD. DWG. NO.
CB 8A

DGN File:L:\Standard Drawings\Imperial\2017 Approved\1-All Drawings\CB08A.dgn
28-NOV-2016

SCHEDULE OF INSTALLATION

LINE NO	DIMENSIONS		MAXIMUM PIPE DIA		REINFORCING STEEL												QUANTITIES		
					A		B		C		D		E		F		REINFORCING STEEL	CONCRETE	STRUCTURAL STEEL
	H	K	RCP	CMP	N	LENGTH	N	LENGTH	N	LENGTH	N	LENGTH	N	LENGTH	N	LENGTH	LBS	CU YDS	LBS
1	2'-0	1'-6	---	15"	7	8'-6"	13	2'-5"	9	1'-9"	2	1'-8"	9	2'-0"	1	11'-0"	145.0	1.14	770
2	2'-6	2'-0	12"	18"	9	8'-6"	15	2'-5"	9	2'-3"	2	2'-2"	9	2'-6"	1	11'-0"	178.2	1.33	770
3	3'-0	2'-6	15"	18"	11	8'-6"	17	2'-5"	9	2'-9"	2	2'-8"	9	3'-0"	1	11'-0"	211.4	1.52	770
4	3'-6	3'-0	18"	18"	11	8'-6	17	2'-5"	9	3'-3"	2	3'-2"	9	3'-6"	1	11'-0"	221.8	1.71	770
5	4'-0	3'-6	18"	18"	13	8'-6"	19	2'-5"	9	3'-9"	2	3'-8"	9	4'-0"	1	11'-0"	255.0	1.90	770

TABLE "A"

ALL OTHER		CMP	
DIA	CU YDS	DIA	CU YDS
12"	0.023	12"	0.015
15"	0.031	15"	0.023
18"	0.041	18"	0.033

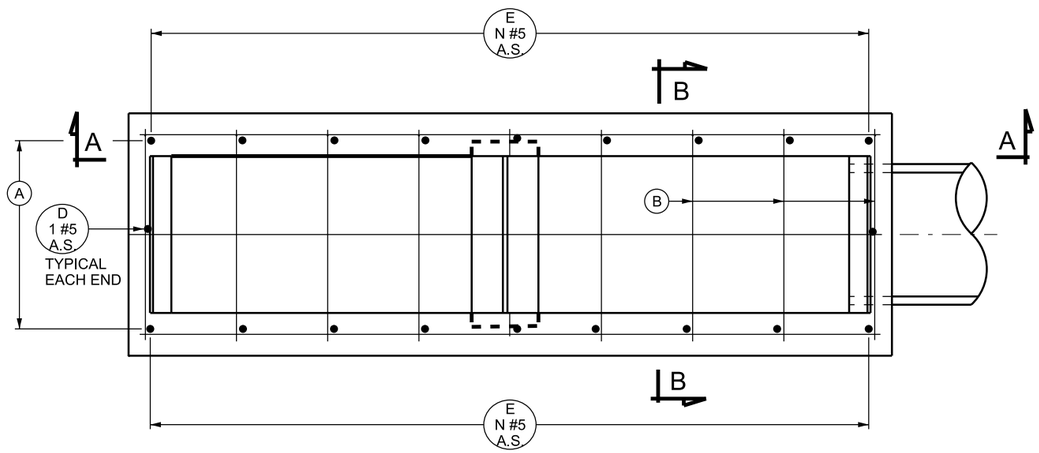

PLAN

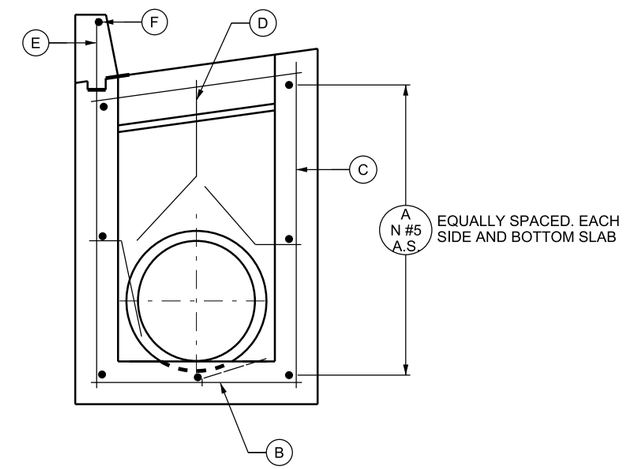

SECTION B-B

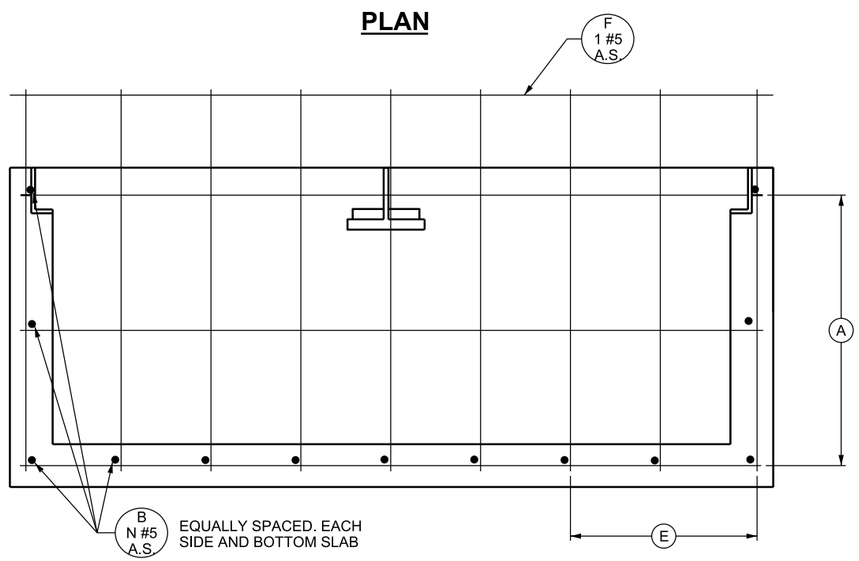

SECTION A-A

NOTES

1. INCLUDE CONCRETE QUANTITIES FOR CURB AND GUTTER IN ROADWAY QUANTITIES.
2. DEDUCT CONCRETE DISPLACED BY PIPES, TABLE "A," FROM CONCRETE QUANTITIES GIVEN IN SCHEDULE OF INSTALLATION.
3. CUT AND BEND REINFORCING STEEL AS NECESSARY TO CLEAR PIPES AND MAINTAIN 2 INCH CLEARANCE.

REVISIONS

NO.	DATE	APPR.	REMARKS

UTAH DEPARTMENT OF TRANSPORTATION
STANDARD DRAWINGS FOR ROAD AND BRIDGE CONSTRUCTION
SALT LAKE CITY, UTAH

RECOMMENDED FOR APPROVAL — JAN.01.2017 DATE
CHAIRMAN STANDARDS COMMITTEE APPROVED — JAN.01.2017 DATE
DEPUTY DIRECTOR

STANDARD DRAWING TITLE
DOUBLE CATCH BASIN

STD. DWG. NO.
CB 8B

DGN File:L:\Standard Drawings\Imperial\2017 Approved\1-All Drawings\CB08B.dgn
28-NOV-2016

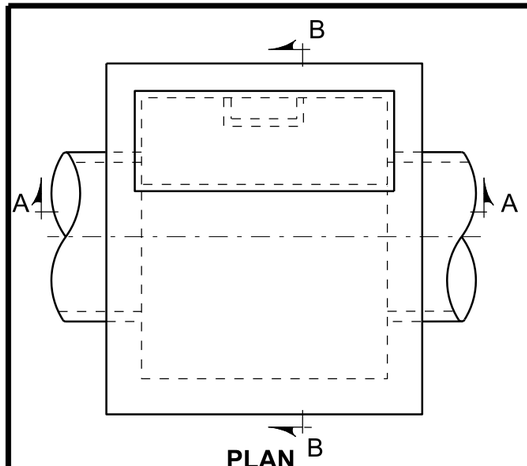

PLAN

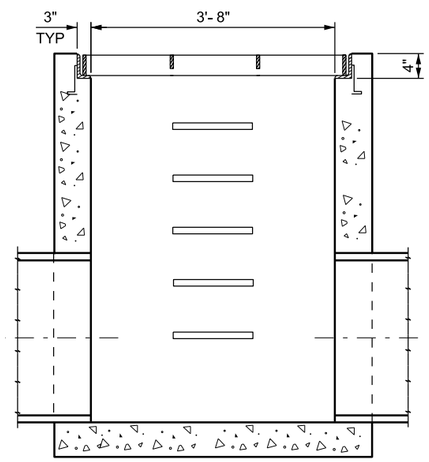

SECTION A-A

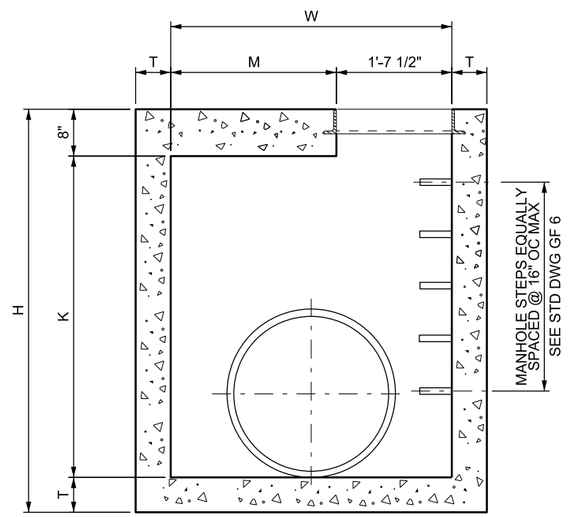

SECTION B-B

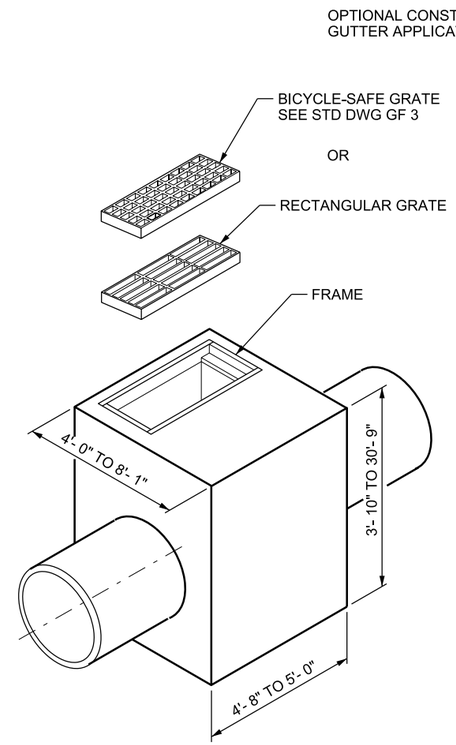

CATCH BASIN

GRATE AND FRAME APPLICATION

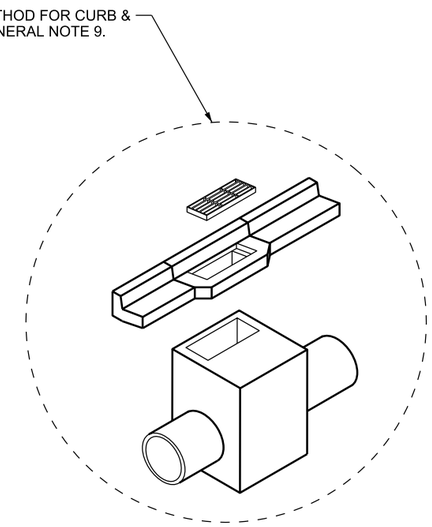

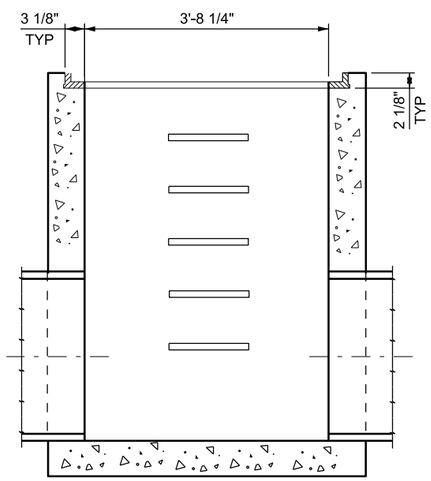

SECTION A-A

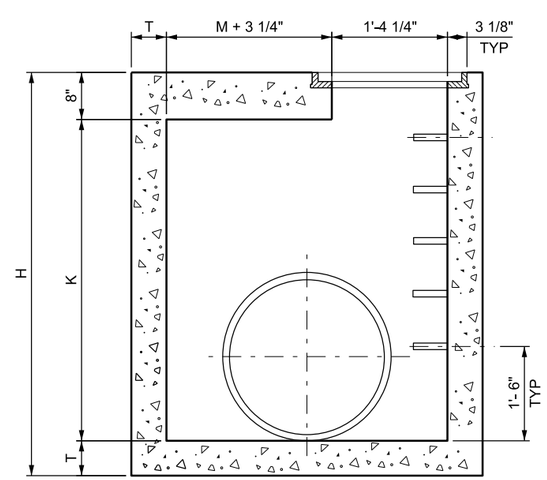

SECTION B-B

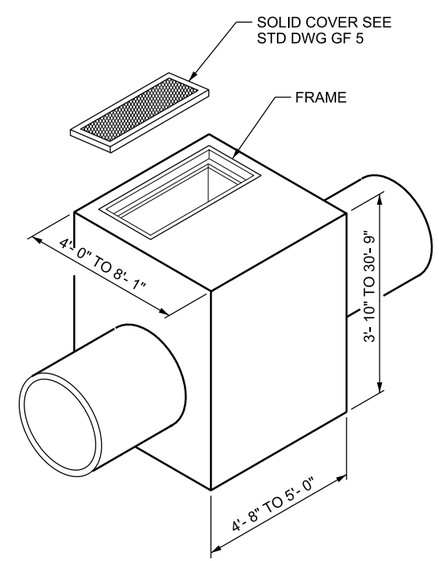

CLEANOUT BOX

SOLID COVER APPLICATION

DESIGN DATA

HL-93 IN ACCORDANCE WITH AASHTO LRFD BRIDGE DESIGN AND INTERIM SPECIFICATIONS

STRUCTURAL STEEL: Fy = 36,000 psi

STRUCTURAL CONCRETE: f 'c = 4,000 psi; fy = 60,000 psi; n = 8

INDEX OF SHEETS

(CB 9A) A- SITUATION & LAYOUT

(CB 9B) B- SECTION DETAILS

(CB 9C) C- SCHEDULE OF INSTALLATION FOR 18-42 INCH RCP. 12-48 INCH CMP

(CB 9D) D-SCHEDULE OF INSTALLATION FOR 48-66 INCH RCP. 60-78 INCH CMP

NOTES

1. USE COATED DEFORMED-CARBON REINFORCING STL BARS CONFORMING TO AASHTO M 284 OR M 111 AND M 31 GRADE 60 RESPECTIVELY.
2. FIELD CUT AND BEND REINFORCING STEEL AS NECESSARY TO CLEAR PIPES AND MAINTAIN 2 INCH COVER. REPAIR ANY DAMAGE OR CUTS TO THE COATING ON REINFORCING BARS.
3. USE CLASS AA (AE) CONCRETE.
4. USE TYPE II CEMENT (LOW ALKALI).
5. PROVIDE 2 INCH CONCRETE COVER TO REINFORCING STEEL.
6. PROVIDE 3/4 INCH CHAMFER ON ALL EXPOSED CONCRETE CORNERS.
7. SEE STD DWG GF 3 OR GF 5 FOR GRATE AND FRAME.
8. SEE ROADWAY PLANS FOR NUMBER, LOCATION, AND SIZE OF PIPE.
9. SEE STD DWG CB 1 AND CB 2 FOR CURB AND GUTTER APPLICATION FOR BOX ELEVATIONS. INCLUDE CONCRETE QUANTITIES FOR CURB AND GUTTER IN ROADWAY QUANTITIES.

REVISIONS

NO.	DATE	APPR.	REMARKS

UTAH DEPARTMENT OF TRANSPORTATION
STANDARD DRAWINGS FOR ROAD AND BRIDGE CONSTRUCTION
SALT LAKE CITY, UTAH

RECOMMENDED FOR APPROVAL — JAN.01.2017 DATE
CHAIRMAN STANDARDS COMMITTEE APPROVED — JAN.01.2017 DATE
DEPUTY DIRECTOR

STANDARD CATCH BASIN AND CLEANOUT BOX SITUATION AND LAYOUT

STANDARD DRAWING TITLE

STD. DWG. NO.
CB 9A

DGN File: L:\Standard Drawings\Imperial\2017 Approved\1-All Drawings\CB09A.dgn
28-NOV-2016

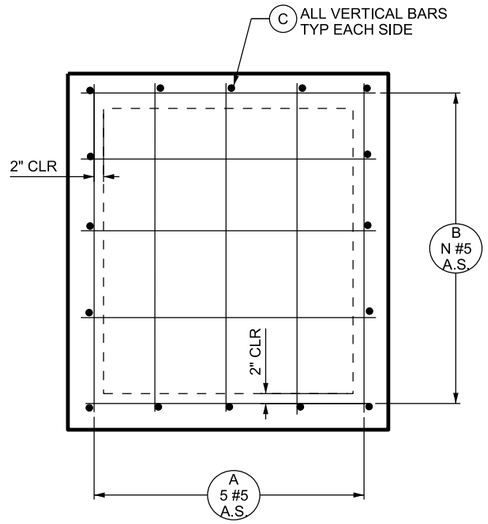

PLAN - BOTTOM SLAB

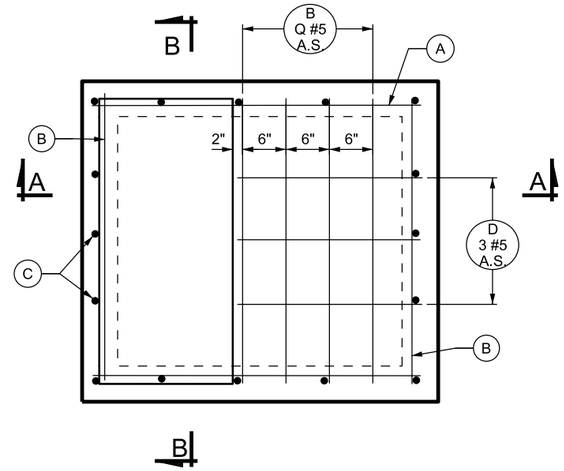

PLAN - TOP SLAB

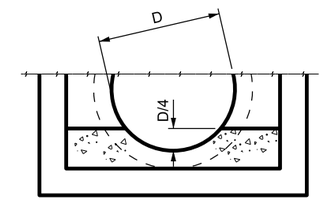

FORMED INVERT

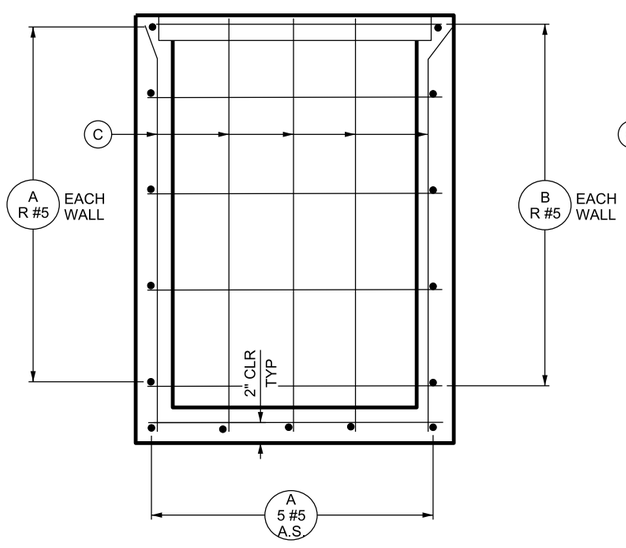

SECTION B-B

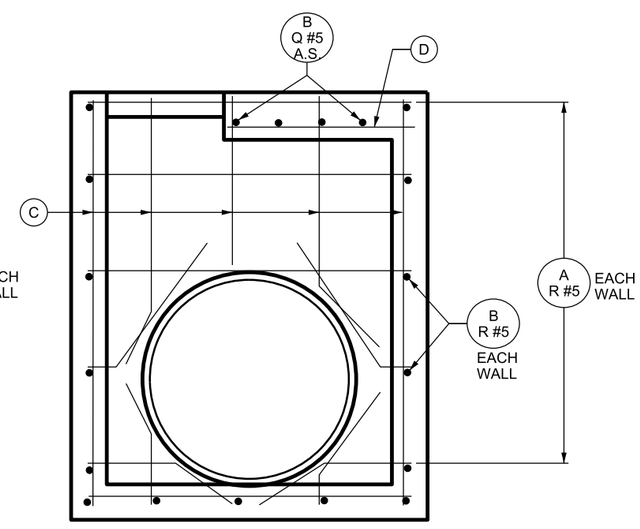

SECTION A-A

NOTES

1. FORM THE BOTTOM SLAB OF THE BOX TO FIT THE INVERT OF THE PIPES WHEN REQUIRED ACCORDING TO THE DETAIL SHOWN ON THIS SHEET. SEE TABLE 3 ON STD DWG CB 9C AND CB 9D FOR ADDITIONAL CONCRETE QUANTITIES.
2. DEDUCT CONCRETE DISPLACED BY PIPES FROM THOSE CONCRETE QUANTITIES GIVEN IN SCHEDULE OF INSTALLATION TABLE 1 ON STD DWG CB 9C AND CB 9D.
3. SEE TABLE 3 ON STD DWG CB 9C FOR ADDITIONAL CONCRETE QUANTITIES WHEN FORMED INVERT IS REQUIRED.
4. FIELD CUT AND BEND REINFORCING STEEL AS NECESSARY TO CLEAR PIPES AND MAINTAIN 2 INCHES MINIMUM CLEARANCE.
5. ALL DIMENSIONS ARE OUT TO OUT OF BARS UNLESS OTHERWISE SHOWN.
6. WEIGHT QUANTITIES FOR GRATE AND FRAME AND SOLID COVER AND ARE SHOWN FOR INFORMATION ONLY.
7. SEE STD DWG CB 9A FOR DIMENSIONS.
8. PIPE DIAMETERS SHOWN IN TABLES AND SCHEDULE ARE INSIDE DIAMETERS.
9. MAXIMUM PIPE DIMENSIONS SHOWN IN SCHEDULE IN INSTALLATION ARE FOR PIPES PERPENDICULAR TO WALLS OF BOX, DETERMINE CLEARANCES FOR SKEWED PIPES.
10. SEE STD DWG GF 6 FOR MANHOLE STEP DETAILS.
11. ALL REINFORCING BARS TO BE #5 BARS @ 12 INCHES, UNLESS OTHERWISE SHOWN.
12. ADD 0.023 CU YDS CONCRETE TO THOSE QUANTITIES GIVEN IN SCHEDULE OF INSTALLATION AND 3 INCH TO EACH D-BAR, AND 1.0 LB TO REINFORCING STEEL QUANTITIES WHEN SOLID COVER IS REQUIRED .
13. PROVIDE FORMED INVERT AS SHOWN ON THIS STD DWG.

REVISIONS

NO.	DATE	APPR.	REMARKS

UTAH DEPARTMENT OF TRANSPORTATION
STANDARD DRAWINGS FOR ROAD AND BRIDGE CONSTRUCTION
SALT LAKE CITY, UTAH

RECOMMENDED FOR APPROVAL — JAN.01.2017 DATE
CHAIRMAN STANDARDS COMMITTEE APPROVED — JAN.01.2017 DATE
DEPUTY DIRECTOR

STANDARD CATCH BASIN AND CLEANOUT BOX SECTION DETAILS

STANDARD DRAWING TITLE

STD. DWG. NO.
CB 9B

28-NOV-2016 DGN File:L:\Standard Drawings\Imperial\2017 Approved\1-All Drawings\CB09B.dgn

LINE	NO. of MANHOLE STEPS	R	COLUMN "A" DIMENSIONS H	K	T	REINFORCING STEEL A LENGTH	A NO	B LENGTH	B NO	C #16 LENGTH	D #3 LENGTH	QUANTITIES CONCRETE CUBIC YARD	REINFORCE STEEL LBS
1	--	4	3'-10	2'-8	6"	3'-8	13	4'-4	16	3'-5	1'-6	1.41	184
2	2	4	4'-4	3'-2			13		16	3'-11		1.55	192
3	2	5	4'-10	3'-8			15		18	4'-5		1.69	217
4	3	5	5'-4	4'-2			15		18	4'-11		1.83	225
5	3	6	5'-10	4'-8			17		20	5'-5		1.98	250
6	4	6	6'-4	5'-2			17		20	5'-11		2.12	259
7	4	7	6'-10	5'-8			19		22	6'-5		2.26	284
8	5	7	7'-4	6'-2			19		22	6'-11		2.40	292
9	5	8	7'-10	6'-8			21		24	7'-5		2.54	317
10	6	8	8'-4	7'-2			21		24	7'-11		2.69	326
11	6	9	8'-10	7'-8			23		26	8'-5		2.83	351
12	7	9	9'-4	8'-2			23		26	8'-11		2.97	359
13	7	10	9'-10	8'-8			25		28	9'-5		3.11	384
14	8	10	10'-4	9'-2			25		28	9'-11		3.25	392
15	8	11	10'-10	9'-8			27		30	10'-5		3.40	417
16	9	11	11'-4	10'-2			27		30	10'-11		3.54	426
17	9	12	11'-10	10'-8			29		32	11'-5		3.68	451
18	10	12	12'-4	11'-2	6"	3'-8	29	4'-4	32	11'-11	1'-6	3.82	459
19	10	13	12'-11	11'-8	7"	3'-10	31	4'-6	34	12'-6	1'-7	4.72	497
20	11	13	13'-5	12'-2			31		34	13'-0		4.89	505
21	11	14	13'-11	12'-8			33		36	13'-6		5.06	531
22	12	14	14'-5	13'-2			33		36	14'-0		5.23	539
23	12	15	14'-11	13'-8			35		38	14'-6		5.40	565
24	13	15	15'-5	14'-2			35		38	15'-0		5.57	574
25	13	16	15'-11	14'-8			37		40	15'-6		5.74	599
26	14	16	16'-5	15'-2			37		40	16'-0		5.91	608
27	14	17	16'-11	15'-8			39		42	16'-6		6.08	633
28	15	17	17'-5	16'-2			39		42	17'-0		6.25	642
29	15	18	17'-11	16'-8			41		44	17'-6		6.42	667
30	16	18	18'-5	17'-2			41		44	18'-0		6.59	676
31	16	19	18'-11	17'-8			43		46	18'-6		6.76	702
32	17	19	19'-5	18'-2			43		46	19'-0		6.92	710
33	17	20	19'-11	18'-8			45		48	19'-6		7.09	736
34	18	20	20'-5	19'-2			45		48	20'-0		7.26	744
35	18	21	20'-11	19'-8			47		50	20'-6		7.43	770
36	19	21	21'-5	20'-2			47		50	21'-0		7.60	778
37	19	22	21'-11	20'-8			49		52	21'-6		7.77	804
38	20	22	22'-5	21'-2	7"	3'-10	49	4'-6	52	22'-0	1'-7	7.94	812
39	20	23	23'-0	21'-8	8"	4'-0	51	4'-8	54	22'-7	1'-8	9.47	858
40	21	23	23'-6	22'-2			51		54	23'-1		9.67	866
41	21	24	24'-0	22'-8			53		56	23'-7		9.87	892
42	22	24	24'-6	23'-2			53		56	24'-1		10.07	901
43	22	25	25'-0	23'-8			55		58	24'-7		10.26	927
44	23	25	25'-6	24'-2			55		58	25'-1		10.46	936
45	23	26	26'-0	24'-8			57		60	25'-7		10.66	962
46	24	26	26'-6	25'-2			57		60	26'-1		10.86	970
47	24	27	27'-0	25'-8			59		62	26'-7		11.05	997
48	25	27	27'-6	26'-2			59		62	27'-1		11.25	1005
49	25	28	28'-0	26'-8			61		64	27'-7		11.45	1031
50	26	28	28'-6	27'-2			61		64	28'-1		11.65	1040
51	26	29	29'-0	27'-8			63		66	28'-7		11.84	1066
52	27	29	29'-6	28'-2			63		66	29'-1		12.04	1075
53	27	30	30'-0	28'-8			65		68	29'-7		12.24	1101
54	28	30	30'-6	29'-2	8"	4'-0	65	4'-8	68	30'-1	1'-8	12.44	1109
			W=3'-0, M=1'-4 ½"									N=5, Q=3	

LINE	COLUMN "B" DIMENSIONS H	K	T	REINFORCING STEEL A LENGTH	A NO	B LENGTH	B NO	C #16 LENGTH	D #3 LENGTH	QUANTITIES CONCRETE CUBIC YARD	REINFORCE STEEL LBS
1	---	---	---	---	--	---	–	---	—	---	---
2	4'-5	3'-3	6"	4'-2	13	4'-4	17	4'-0	2'-0	1.73	206
3	4'-11	3'-9			15		19	4'-6		1.88	232
4	5'-5	4'-3			15		19	5'-0		2.03	241
5	5'-11	4'-9			17		21	5'-6		2.19	266
6	6'-5	5'-3			17		21	6'-0		2.34	275
7	6'-11	5'-9			19		23	6'-6		2.49	303
8	7'-5	6'-3			19		23	7'-0		2.64	310
9	7'-11	6'-9			21		25	7'-6		2.79	336
10	8'-5	7'-3			21		25	8'-0		2.94	344
11	8'-11	7'-9			23		27	8'-6		3.09	370
12	9'-5	8'-3			23		27	9'-0		3.24	378
13	9'-11	8'-9			25		29	9'-6		3.39	405
14	10'-5	9'-3			25		29	10'-0		3.54	413
15	10'-11	9'-9			27		31	10'-6		3.70	439
16	11'-5	10'-3			27		31	11'-0		3.85	447
17	11'-11	10'-9			29		33	11'-6		4.00	473
18	12'-6	11'-3	6"	4'-2	29	4'-4	33	12'-0	2'-0	4.15	481
19	13'-0	11'-9	7"	4'-4	31	4'-6	35	12'-7	2'-1	5.12	521
20	13'-6	12'-3			31		35	13'-1		5.30	529
21	14'-0	12'-9			33		37	13'-7		5.48	556
22	14'-6	13'-3			33		37	14'-1		5.66	564
23	15'-0	13'-9			35		39	14'-7		5.84	591
24	15'-6	14'-3			35		39	15'-1		6.02	599
25	16'-0	14'-9			37		41	15'-7		6.20	626
26	16'-6	15'-3			37		41	16'-1		6.38	634
27	17'-0	15'-9			39		43	16'-7		6.56	661
28	17'-6	16'-3			39		43	17'-1		6.74	669
29	18'-0	16'-9			41		45	17'-7		6.92	696
30	18'-6	17'-3			41		45	18'-1		7.10	704
31	19'-0	17'-9			43		47	18'-7		7.28	731
32	19'-6	18'-3			43		47	19'-1		7.46	740
33	20'-0	18'-9			45		49	19'-7		7.64	766
34	20'-6	19'-3			45		49	20'-1		7.82	775
35	21'-0	19'-9			47		51	20'-7		8.10	801
36	21'-6	20'-3			47		51	21'-1		8.18	810
37	22'-0	20'-9			49		53	21'-7		8.36	837
38	22'-6	21'-3	7"	4'-4	49	4'-6	53	22'-1	2'-1	8.54	345
39	23'-1	21'-9	8"	4'-6	51	4'-8	55	22'-8	2'-2	10.17	892
40	23'-7	22'-3			51		55	23'-2		10.38	900
41	24'-1	22'-9			53		57	23'-8		10.59	928
42	24'-7	23'-3			53		57	24'-2		10.80	936
43	25'-1	23'-9			55		59	24'-8		11.01	963
44	25'-7	24'-3			55		59	25'-2		11.22	972
45	26'-1	24'-9			57		61	25'-8		11.43	1000
46	26'-7	25'-3			57		61	26'-2		11.64	1008
47	27'-1	25'-9			59		63	26'-8		11.85	1035
48	27'-7	26'-3			59		63	27'-2		12.06	1043
49	28'-1	26'-9			61		65	27'-8		12.27	1071
50	28'-7	27'-3			61		65	28'-2		12.48	1079
51	29'-1	27'-9			63		67	28'-8		12.69	1107
52	29'-7	28'-3			63		67	29'-2		12.90	1115
53	30'-1	28'-9			65		69	29'-8		13.11	1142
54	30'-7	29'-3	8"	4'-6	65	4'-8	69	30'-2	2'-2	13.32	1151
	W=3'-6, M=1'-10 ½"									N=5, Q=4	

LINE	COLUMN "C" DIMENSIONS H	K	T	REINFORCING STEEL A LENGTH	A NO	B LENGTH	B NO	C #18 LENGTH	D #3 LENGTH	QUANTITIES CONCRETE CUBIC YARD	REINFORCE STEEL LBS
1	---	---	---	---	–	---	–	---	---	---	—
2	---	---	—	---	–	---	–	---	---	---	—
3	5'-0	3'-10	6"	4'-8	15	4'-4	21	4'-7	2'-6	2.08	262
4	5'-6	4'-4			15		21	5'-1		2.24	271
5	6'-0	4'-10			17		23	5'-7		2.40	299
6	6'-6	5'-4			17		23	6'-1		2.57	309
7	7'-0	5'-10			19		25	6'-7		2.73	337
8	7'-6	6'-4			19		25	7'-1		2.89	346
9	8'-0	6'-10			21		27	7'-7		3.05	374
10	8'-6	7'-4			21		27	8'-1		3.21	383
11	9'-0	7'-10			23		29	8'-7		3.37	412
12	9'-6	8'-4			23		29	9'-1		3.53	421
13	10'-0	8'-10			25		31	9'-7		3.69	449
14	10'-6	9'-4			25		31	10'-1		3.85	459
15	11'-0	9'-10			27		33	10'-7		4.01	487
16	11'-6	10'-4			27		33	11'-1		4.18	496
17	12'-0	10'-10			29		35	11'-7		4.34	524
18	12'-6	11'-4	6"	4'-8	29	4'-4	35	12'-1	2'-6	4.50	534
19	13'-1	11'-10	7"	4'-10	31	4'-6	37	12'-8	2'-7	5.52	576
20	13'-7	12'-4			31		37	13'-2		5.71	585
21	14'-1	12'-10			33		39	13'-8		5.90	613
22	14'-7	13'-4			33		39	14'-2		6.09	622
23	15'-1	13'-10			35		41	14'-8		6.28	651
24	15'-7	14'-4			35		41	15'-2		6.47	662
25	16'-1	14'-10			37		43	15'-8		6.66	691
26	16'-7	15'-4			37		43	16'-2		6.85	700
27	17'-1	15'-10			39		45	16'-8		7.04	729
28	17'-7	16'-4			39		45	17'-2		7.24	738
29	18'-1	16'-10			41		47	17'-8		7.43	767
30	18'-7	17'-4			41		47	18'-2		7.62	776
31	19'-1	17'-10			43		49	18'-8		7.81	805
32	19'-7	18'-4			43		49	19'-2		8.00	815
33	20'-1	18'-10			45		51	19'-8		8.19	844
34	20'-7	19'-4			45		51	20'-2		8.38	853
35	21'-1	19'-10			47		53	20'-8		8.57	882
36	21'-7	20'-4			47		53	21'-2		8.76	891
37	22'-1	20'-10			49		55	21'-8		8.95	920
38	22'-7	21'-4	7"	4'-10	49	4'-6	55	22'-2	2'-7	9.15	929
39	23'-2	21'-10	8"	5'-0	51	4'-8	57	22'-9	2'-8	10.86	979
40	23'-8	22'-4			51		57	23'-3		11.09	988
41	24'-2	22'-10			53		59	23'-9		11.31	1018
42	24'-8	23'-4			53		59	24'-3		11.53	1027
43	25'-2	23'-10			55		61	24'-9		11.75	1057
44	25'-8	24'-4			55		61	25'-3		11.97	1066
45	26'-2	24'-10			57		63	25'-9		12.20	1096
46	26'-8	25'-4			57		63	26'-3		12.42	1105
47	27'-2	25'-10			59		65	26'-9		12.64	1135
48	27'-8	26'-4			59		65	27'-3		12.86	1144
49	28'-2	26'-10			61		67	27'-9		13.08	1174
50	28'-8	27'-4			61		67	28'-3		13.31	1183
51	29'-2	27'-10			63		69	28'-9		13.53	1212
52	29'-8	28'-4			63		69	29'-3		13.75	1222
53	30'-2	28'-10			65		71	29'-9		13.97	1251
54	30'-8	29'-4	8"	5'-0	65	4'-8	71	30'-3	2'-8	14.19	1261
	W=4'-0, M=2'-4 ½"									N=6, Q=5	

LINE	COLUMN "D" DIMENSIONS H	K	T	REINFORCING STEEL A LENGTH	A NO	B LENGTH	B NO	C #18 LENGTH	D #3 LENGTH	QUANTITIES CONCRETE CUBIC YARD	REINFORCE STEEL LBS	LINE
1	—	---	—	---	–	—	–	---	—	---	—	1
2	—	---	—	---	–	—	–	---	—	---	—	2
3	—	---	—	---	–	—	–	---	—	---	—	3
4	5'-7	4'-5	6"	5'-2	15	4'-4	22	5'-2	3'-0	2.45	287	4
5	6'-1	4'-11			17		24	5'-8		2.62	316	5
6	6'-7	5'-5			17		24	6'-2		2.79	325	6
7	7'-1	5'-11			19		26	6'-8		2.96	354	7
8	7'-7	6'-5			19		26	7'-2		3.13	364	8
9	8'-1	6'-11			21		28	7'-8		3.30	393	9
10	8'-7	7'-5			21		28	8'-2		3.47	402	10
11	9'-1	7'-11			23		30	8'-8		3.64	432	11
12	9'-7	8'-5			23		30	9'-2		3.81	441	12
13	10'-1	8'-11			25		32	9'-8		3.98	470	13
14	10'-7	9'-5			25		32	10'-2		4.15	480	14
15	11'-1	9'-11			27		34	10'-8		4.32	509	15
16	11'-7	10'-5			27		34	11'-2		4.49	518	16
17	12'-1	10'-11			29		36	11'-8		4.66	547	17
18	12'-7	11'-5	6"	5'-2	29	4'-4	36	12'-2	3'-0	4.83	557	18
19	13'-2	11'-11	7"	5'-4	31	4'-6	38	12'-9	3'-1	5.92	600	19
20	13'-8	12'-5			31		38	13'-3		6.12	609	20
21	14'-2	12'-11			33		40	13'-9		6.32	639	21
22	14'-8	13'-5			33		40	14'-3		6.52	648	22
23	15'-2	13'-11			35		42	14'-9		6.72	678	23
24	15'-8	14'-5			35		42	15'-3		6.93	688	24
25	16'-2	14'-11			37		44	15'-9		7.13	718	25
26	16'-8	15'-5			37		44	16'-3		7.33	727	26
27	17'-2	15'-11			39		46	16'-9		7.53	757	27
28	17'-8	16'-5			39		46	17'-3		7.74	766	28
29	18'-2	16'-11			41		48	17'-9		7.94	796	29
30	18'-8	17'-5			41		48	18'-3		8.14	806	30
31	19'-2	17'-11			43		50	18'-9		8.34	836	31
32	19'-8	18'-5			43		50	19'-3		8.53	845	32
33	20'-2	18'-11			45		52	19'-9		8.75	875	33
34	20'-8	19'-5			45		52	20'-3		8.95	884	34
35	21'-2	19'-11			47		54	20'-9		9.15	914	35
36	21'-8	20'-5			47		54	21'-3		9.35	923	36
37	22'-2	20'-11			49		56	21'-9		9.55	953	37
38	22'-8	21'-5	7"	5'-4	49	4'-6	56	22'-3	3'-1	9.76	962	38
39	23'-3	21'-11	8"	5'-6	51	4'-8	58	22'-10	3'-2	11.57	1013	39
40	23'-9	22'-5			51		58	23'-4		11.80	1023	40
41	24'-3	22'-11			53		60	23'-10		12.04	1053	41
42	24'-9	23'-5			53		60	24'-4		12.27	1063	42
43	25'-3	23'-11			55		62	24'-10		12.51	1093	43
44	25'-9	24'-5			55		62	25'-4		12.74	1103	44
45	26'-3	24'-11			57		64	25'-10		12.98	1133	45
46	26'-9	25'-5			57		64	26'-4		13.21	1143	46
47	27'-3	25'-11			59		66	26'-10		13.45	1173	47
48	27'-9	26'-5			59		66	27'-4		13.68	1183	48
49	28'-3	26'-11			61		68	27'-10		13.92	1213	49
50	28'-9	27'-5			61		68	28'-4		14.15	1223	50
51	29'-3	27'-11			63		70	28'-10		14.39	1253	51
52	29'-9	28'-5			63		70	29'-4		14.62	1263	52
53	30'-3	28'-11			65		72	29'-10		14.86	1293	53
54	30'-9	29'-5	8"	5'-6	65	4'-8	72	30'-4	3'-2	15.09	1303	54
	W=4'-6, M=2'-10 ½"									N=6, Q=6		

TABLE 1 : CONCRETE DISPLACED BY PIPES

PIPE SIZES RCP	PIPE SIZES CMP	T= 6" yd^3	T= 7" yd^3	T= 8" yd^3
	12"	0.015	0.017	0.019
	18"	0.033	0.038	0.044
18"	24"	0.058	0.068	0.078
24"	30"	0.091	0.106	0.121
30"	36"	0.131	0.153	0.174
36"	42"	0.178	0.208	0.237
42"	48"	0.233	0.271	0.310

TABLE 2 : MAXIMUM PIPE SIZE TO BE USED

	RCP	CMP
COL. A	18"	12", 18", 24"
COL. B	30"	30", 36"
COL. C	36"	42"
COL. D	42"	48"

TABLE 3 : CONCRETE NEEDED FOR FORMED INVERT. (SEE SHEET 2)

PIPE SIZES	12"	18"	24"	30"	36"	42"	48"
RCP (yd^3)	---	0.191	0.222	0.286	0.378	0.483	----
CMP (yd^3)	0.081	0.106	0.120	0.124	0.169	0.220	0.277

STRUCTURAL STEEL :

RECTANGULAR GRATE & FRAME = 340 lbs
BICYCLE-SAFE GRATE & FRAME = 365 lbs
SOLID COVER & FRAME = 474 lbs

REVISIONS

NO.	DATE	APPR.	REMARKS

UTAH DEPARTMENT OF TRANSPORTATION
STANDARD DRAWINGS FOR ROAD AND BRIDGE CONSTRUCTION
SALT LAKE CITY, UTAH

RECOMMENDED FOR APPROVAL — JAN.01, 2017 DATE
CHAIRMAN STANDARDS COMMITTEE — JAN.01, 2017 DATE
APPROVED — DEPUTY DIRECTOR

STANDARD CATCH BASIN AND CLEANOUT BOX SCHEDULE OF INSTALLATION 18 TO 42 INCH RCP 12 TO 48 INCH CMP

STANDARD DRAWING TITLE

STD. DWG. NO.
CB 9C

28-NOV-2016 DGN File:L:\Standard_Drawings\Imperial\2017 Approved\:-All Drawings\CB09C.dgn

LINE	NO. of MANHOLE STEPS	R	COLUMN "E" DIMENSIONS H	K	T	REINFORCING STEEL A LENGTH	A NO	B LENGTH	B NO	C #22 LENGTH	D #3 LENGTH	QUANTITIES CONCRETE CUBIC YDS	REINFORCE STEEL LBS
1	4	6	* 6'-4	5'-2	6"	5'-11	17	4'-4	26	5'-11	3'-9	3.00	370
2	4	7	6'-10	5'-8			19		28	6'-5		3.18	403
3	5	7	7'-4	6'-2			19		28	6'-11		3.37	414
4	5	8	7'-10	6'-8			21		30	7'-5		3.55	447
5	6	8	8'-4	7'-2			21		30	7'-11		3.74	459
6	6	9	8'-10	7'-8			23		32	8'-5		3.92	491
7	7	9	9'-4	8'-2			23		32	8'-11		4.10	503
8	7	10	9'-10	8'-8			25		34	9'-5		4.29	536
9	8	10	10'-4	9'-2			25		34	9'-11		4.47	547
10	8	11	10'-10	9'-8			27		36	10'-5		4.65	580
11	9	11	11'-4	10'-2			27		36	10'-11		4.84	592
12	9	12	11'-10	10'-8			29		38	11'-5		5.02	624
13	10	12	12'-4	11'-2	6"	5'-11	29	4'-4	38	11'-11	3'-9	5.20	636
14	10	13	12'-11	11'-8	7"	6'-1	31	4'-6	40	12'-6	3'-10	6.36	683
15	11	13	13'-5	12'-2			31		40	13'-0		6.58	695
16	11	14	13'-11	12'-8			33		42	13'-6		6.80	728
17	12	14	14'-5	13'-2			33		42	14'-0		7.02	740
18	12	15	14'-11	13'-8			35		44	14'-6		7.23	773
19	13	15	15'-5	14'-2			35		44	15'-0		7.45	785
20	13	16	15'-11	14'-8			37		46	15'-6		7.67	818
21	14	16	16'-5	15'-2			37		46	16'-0		7.89	830
22	14	17	16'-11	15'-8			39		48	16'-6		8.11	863
23	15	17	17'-5	16'-2			39		48	17'-0		8.32	875
24	15	18	17'-11	16'-8			41		50	17'-6		8.54	908
25	16	18	18'-5	17'-2			41		50	18'-0		8.76	920
26	16	19	18'-11	17'-8			43		52	18'-6		8.98	953
27	17	19	19'-5	18'-2			43		52	19'-0		9.19	965
28	17	21	19'-11	18'-8			47		56	19'-6		9.41	1020
29	18	21	20'-5	19'-2			47		56	20'-0		9.63	1032
30	18	22	20'-11	19'-8			49		58	20'-6		9.85	1066
31	19	22	21'-5	20'-2			49		58	21'-0		10.07	1077
32	19	25	21'-11	20'-8			55		64	21'-6		10.28	1155
33	20	25	22'-5	21'-2	7"	6'-1	55	4'-6	64	22'-0	3'-10	10.50	1166
34	20	23	23'-0	21'-8	8"	6'-3	51	4'-8	60	22'-7	3'-11	12.44	1155
35	21	23	23'-6	22'-2			51		60	23'-1		12.69	1166
36	21	24	24'-0	22'-8			53		62	23'-7		12.94	1201
37	22	24	24'-6	23'-2			53		62	24'-1		13.19	1212
38	22	26	25'-0	23'-8			57		66	24'-7		13.45	1269
39	23	26	25'-6	24'-2			57		66	25'-1		13.70	1281
40	23	29	26'-0	24'-8			63		72	25'-7		13.95	1360
41	24	29	26'-6	25'-2			63		72	26'-1		14.21	1372
42	24	31	27'-0	25'-8			67		76	26'-7		14.46	1429
43	25	31	27'-6	26'-2			67		76	27'-1		14.71	1440
44	25	34	28'-0	26'-8			73		82	27'-7		14.97	1520
45	26	34	28'-6	27'-2			73		82	28'-1		15.22	1532
46	26	37	29'-0	27'-8			79		88	28'-7		15.47	1611
47	27	37	29'-6	28'-2			79		88	29'-1		15.73	1623
48	27	40	30'-0	28'-8			85		94	29'-7		15.98	1703
49	28	40	30'-6	29'-2	8"	6'-3	85	4'-8	94	30'-1	3'-11	16.23	1714
			W=5'-3, M=3'-7 ½"									N=7, Q=7	

LINE	COLUMN "F" DIMENSIONS H	K	T	REINFORCING STEEL A LENGTH	A NO	B LENGTH	B NO	C #22 LENGTH	D #3 LENGTH	QUANTITIES CONCRETE CUBIC YDS	REINFORCE STEEL LBS
1	—	—	—	—	—	—	—	—	—	—	—
2	6'-10	5'-8	6"	6'-5	19	4'-4	29	6'-5	4'-3	3.39	419
3	7'-4	6'-2			19		29	6'-11		3.59	430
4	7'-10	6'-8			21		31	7'-5		3.78	464
5	8'-4	7'-2			21		31	7'-11		3.97	476
6	8'-10	7'-8			23		33	8'-5		4.16	510
7	9'-4	8'-2			23		33	8'-11		4.36	521
8	9'-10	8'-8			25		35	9'-5		4.55	555
9	10'-4	9'-2			25		35	9'-11		4.74	566
10	10'-10	9'-8			27		37	10'-5		4.93	600
11	11'-4	10'-2			27		37	10'-11		5.13	612
12	11'-10	10'-8			29		39	11'-5		5.32	646
13	12'-4	11'-2	6"	6'-5	29	4'-4	39	11'-11	4'-3	5.51	657
14	12'-11	11'-8	7"	6'-7	31	4'-6	41	12'-6	4'-4	6.73	706
15	13'-5	12'-2			31		41	13'-0		6.96	717
16	13'-11	12'-8			33		43	13'-6		7.18	752
17	14'-5	13'-2			33		43	14'-0		7.41	763
18	14'-11	13'-8			35		45	14'-6		7.64	798
19	15'-5	14'-2			35		45	15'-0		7.87	809
20	15'-11	14'-8			37		47	15'-6		8.10	844
21	16'-5	15'-2			37		47	16'-0		8.33	855
22	16'-11	15'-8			39		49	16'-6		8.56	890
23	17'-5	16'-2			39		49	17'-0		8.78	901
24	17'-11	16'-8			41		51	17'-6		9.01	936
25	18'-5	17'-2			41		51	18'-0		9.24	947
26	18'-11	17'-8			43		53	18'-6		9.47	982
27	19'-5	18'-2			43		53	19'-0		9.69	994
28	19'-11	18'-8			47		57	19'-6		9.93	1051
29	20'-5	19'-2			47		57	20'-0		10.16	1063
30	20'-11	19'-8			49		59	20'-6		10.39	1097
31	21'-5	20'-2			49		59	21'-0		10.61	1109
32	21'-11	20'-8			55		65	21'-6		10.84	1190
33	22'-5	21'-2	7"	6'-7	55	4'-6	65	22'-0	4'-4	11.07	1201
34	23'-0	21'-8	8"	6'-9	51	4'-8	61	22'-7	4'-5	13.09	1188
35	23'-6	22'-2			51		61	23'-1		13.36	1199
36	24'-0	22'-8			53		63	23'-7		13.63	1235
37	24'-6	23'-2			53		63	24'-1		13.89	1246
38	25'-0	23'-8			57		67	24'-7		14.16	1305
39	25'-6	24'-2			57		67	25'-1		14.42	1317
40	26'-0	24'-8			63		73	25'-7		14.69	1400
41	26'-6	25'-2			63		73	26'-1		14.95	1411
42	27'-0	25'-8			67		77	26'-7		15.22	1470
43	27'-6	26'-2			67		77	27'-1		15.48	1482
44	28'-0	26'-8			73		83	27'-7		15.75	1565
45	28'-6	27'-2			73		83	28'-1		16.01	1576
46	29'-0	27'-8			79		89	28'-7		16.28	1659
47	29'-6	28'-2			79		89	29'-1		16.55	1671
48	30'-0	28'-8			85		95	29'-7		16.81	1753
49	30'-6	29'-2	8"	6'-9	85	4'-8	95	30'-1	4'-5	17.08	1765
	W=5'-9, M=4'-1 ½"									N=7, Q=8	

LINE	COLUMN "G" DIMENSIONS H	K	T	REINFORCING STEEL A LENGTH	A NO	B LENGTH	B NO	C #28 LENGTH	D #3 LENGTH	QUANTITIES CONCRETE CUBIC YDS	REINFORCE STEEL LBS
1	—	—	—	—	—	—	—	—	—	—	—
2	—	—	—	—	—	—	—	—	—	—	—
3	* 7'-4	6'-2	6"	6'-11	19	4'-4	31	6'-11	4'-9	3.80	494
4	7'-10	6'-8			21		33	7'-5		4.00	532
5	8'-4	7'-2			21		33	7'-11		4.20	547
6	8'-10	7'-8			23		35	8'-5		4.40	585
7	9'-4	8'-2			23		35	8'-11		4.61	599
8	9'-10	8'-8			25		37	9'-5		4.81	637
9	10'-4	9'-2			25		37	9'-11		5.01	652
10	10'-10	9'-8			27		39	10'-5		5.21	690
11	11'-4	10'-2			27		39	10'-11		5.42	705
12	11'-10	10'-8			29		41	11'-5		5.62	745
13	12'-5	11'-2	6"	6'-11	29	4'-4	41	11'-11	4'-9	5.82	760
14	12'-11	11'-8	7"	7'-1	31	4'-6	43	12'-6	4'-10	7.09	811
15	13'-5	12'-2			31		43	13'-0		7.33	826
16	13'-11	12'-8			33		45	13'-6		7.57	864
17	14'-5	13'-2			33		45	14'-0		7.81	879
18	14'-11	13'-8			35		47	14'-6		8.05	918
19	15'-5	14'-2			35		47	15'-0		8.29	932
20	15'-11	14'-8			37		49	15'-6		8.53	971
21	16'-5	15'-2			37		49	16'-0		8.77	986
22	16'-11	15'-8			39		51	16'-6		9.01	1024
23	17'-5	16'-2			39		51	17'-0		9.24	1039
24	17'-11	16'-8			41		53	17'-6		9.48	1078
25	18'-5	17'-2			41		53	18'-0		9.72	1092
26	18'-11	17'-8			43		55	18'-6		9.96	1131
27	19'-5	18'-2			43		55	19'-0		10.20	1146
28	19'-11	18'-8			47		59	19'-6		10.44	1209
29	20'-5	19'-2			47		59	20'-0		10.68	1223
30	20'-11	19'-8			49		61	20'-6		10.92	1262
31	21'-5	20'-2			49		61	21'-0		11.16	1277
32	21'-11	20'-8			55		67	21'-6		11.40	1364
33	22'-5	21'-2	7"	7'-1	55	4'-6	67	22'-0	4'-10	11.64	1378
34	23'-0	21'-8	8"	7'-3	51	4'-8	63	22'-7	4'-11	13.75	1367
35	23'-6	22'-2			51		63	23'-1		14.03	1382
36	24'-0	22'-8			53		65	23'-7		14.31	1421
37	24'-6	23'-2			53		65	24'-1		14.58	1436
38	25'-0	23'-8			57		69	24'-7		14.86	1500
39	25'-6	24'-2			57		69	25'-1		15.14	1515
40	26'-0	24'-8			63		75	25'-7		15.42	1604
41	26'-6	25'-2			63		75	26'-1		15.70	1619
42	27'-0	25'-8			67		79	26'-7		15.97	1683
43	27'-6	26'-2			67		79	27'-1		16.25	1697
44	28'-0	26'-8			73		85	27'-7		16.53	1787
45	28'-6	27'-2			73		85	28'-1		16.81	1801
46	29'-0	27'-8			79		91	28'-7		17.08	1890
47	29'-6	28'-2			79		91	29'-1		17.36	1905
48	30'-0	28'-8			85		97	29'-7		17.64	1994
49	30'-6	29'-2	8"	7'-3	85	4'-8	97	30'-1	4'-11	17.92	2009
	W=6'-3, M=4'-7 ½"									N=8, Q=9	

LINE	COLUMN "H" DIMENSIONS H	K	T	REINFORCING STEEL A LENGTH	A NO	B LENGTH	B NO	C #28 LENGTH	D #3 LENGTH	QUANTITIES CONCRETE CUBIC YDS	REINFORCE STEEL LBS
1	—	—	—	—	—	—	—	—	—	—	—
2	—	—	—	—	—	—	—	—	—	—	—
3	—	—	—	—	—	—	—	—	—	—	—
4	* 8'-1	6'-11	6"	7'-5	21	4'-4	34	7'-8	5'-3	4.33	556
5	8'-7	7'-5			21		34	8'-2		4.54	571
6	9'-1	7'-11			23		36	8'-8		4.75	610
7	9'-7	8'-5			23		36	9'-2		4.96	625
8	10'-1	8'-11			25		38	9'-8		5.18	664
9	10'-7	9'-5			25		38	10'-2		5.39	678
10	11'-1	9'-11			27		40	10'-8		5.60	718
11	11'-7	10'-5			27		40	11'-2		5.81	732
12	12'-1	10'-11			29		42	11'-8		6.02	771
13	12'-7	11'-5	6"	7'-5	29	4'-4	42	12'-2	5'-3	6.23	786
14	13'-2	11'-11	7"	7'-7	31	4'-6	44	12'-9	5'-4	7.58	841
15	13'-8	12'-5			31		44	13'-3		7.83	855
16	14'-2	12'-11			33		46	13'-9		8.08	895
17	14'-8	13'-5			33		46	14'-3		8.33	910
18	15'-2	13'-11			35		48	14'-9		8.58	950
19	15'-8	14'-5			35		48	15'-3		8.83	964
20	16'-2	14'-11			37		50	15'-9		9.08	1004
21	16'-8	15'-5			37		50	16'-3		9.33	1019
22	17'-2	15'-11			39		52	16'-9		9.58	1058
23	17'-8	16'-5			39		52	17'-3		9.83	1073
24	18'-2	16'-11			41		54	17'-9		10.08	1113
25	18'-8	17'-5			41		54	18'-3		10.33	1127
26	19'-2	17'-11			43		56	18'-9		10.58	1167
27	19'-8	18'-5			43		56	19'-3		10.83	1182
28	20'-2	18'-11			47		60	19'-9		11.08	1247
29	20'-8	19'-5			47		60	20'-3		11.33	1261
30	21'-2	19'-11			49		62	20'-9		11.58	1301
31	21'-8	20'-5			49		62	21'-3		11.83	1316
32	22'-2	20'-11			55		68	21'-9		12.08	1406
33	22'-8	21'-5	7"	7'-7	55	4'-6	68	22'-3	5'-4	12.33	1421
34	23'-3	21'-11	8"	7'-9	51	4'-8	64	22'-10	5'-5	14.56	1408
35	23'-9	22'-5			51		64	23'-4		14.85	1422
36	24'-3	22'-11			53		66	23'-10		15.14	1463
37	24'-9	23'-5			53		66	24'-4		15.43	1477
38	25'-3	23'-11			57		70	24'-10		15.72	1544
39	25'-9	24'-5			57		70	25'-4		16.01	1558
40	26'-3	24'-11			63		76	25'-10		16.30	1651
41	26'-9	25'-5			63		76	26'-4		16.59	1665
42	27'-3	25'-11			67		80	26'-10		16.88	1732
43	27'-9	26'-5			67		80	27'-4		17.17	1746
44	28'-3	26'-11			73		86	27'-10		17.46	1838
45	28'-9	27'-5			73		86	28'-4		17.75	1853
46	29'-3	27'-11			79		92	28'-10		18.04	1945
47	29'-9	28'-5			79		92	29'-4		18.33	1960
48	30'-3	28'-11			85		98	29'-10		18.62	2052
49	30'-9	29'-5	8"	7'-9	85	4'-8	98	30'-4	5'-5	18.91	2067
	W=6'-9, M=5'-1 ½"									N=8, Q=10	

TABLE 1 : CONCRETE DISPLACED BY PIPES

PIPE SIZES RCP	PIPE SIZES CMP	T= 6" yd^3	T= 7" yd^3	T= 8" yd^3
48"	60"	0.340	0.396	0.453
54"	66"	0.427	0.498	0.569
60"	72"	0.524	0.611	0.698
66"	78"	0.630	0.735	0.840

TABLE 2 : MAXIMUM PIPE SIZE TO BE USED

	RCP	CMP
COL. E	48"	60"
COL. F	54"	66"
COL. G	60"	72"
COL. H	66"	78"

TABLE 3 : CONCRETE NEEDED FOR FORMED INVERT. (SEE SHEET 2)

PIPE SIZES	48"	54"	60"	66"	72"	78"
RCP (yd^3)	0.676	0.814	0.964	1.126	—	—
CMP (yd^3)	—	—	0.370	0.443	0.522	0.609

STRUCTURAL STEEL :
RECTANGULAR GRATE & FRAME = 340 lbs
BICYCLE-SAFE GRATE & FRAME = 365 lbs
SOLID COVER & FRAME = 474 lbs

NOTES

1. LINES MARKED WITH * REFER TO METAL PIPE ONLY.

REVISIONS

NO.	DATE	APPR.	REMARKS

UTAH DEPARTMENT OF TRANSPORTATION
STANDARD DRAWINGS FOR ROAD AND BRIDGE CONSTRUCTION
SALT LAKE CITY, UTAH

RECOMMENDED FOR APPROVAL — JAN.01, 2017 DATE
CHAIRMAN STANDARDS COMMITTEE APPROVED — JAN.01, 2017 DATE
DEPUTY DIRECTOR

STANDARD CATCH BASIN AND CLEANOUT BOX SCHEDULE OF INSTALLATION 48 TO 66 INCH RCP 60 TO 78 INCH CMP
STANDARD DRAWING TITLE

STD. DWG. NO.
CB 9D

28-NOV-2016 DGN File:L:\Standard Drawings\Imperial\2017 Approved\1-All Drawings\CB09D.dgn

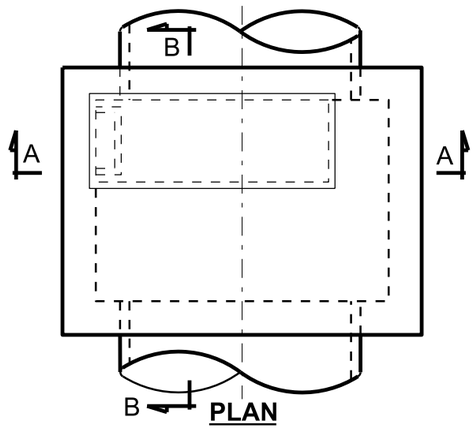

PLAN

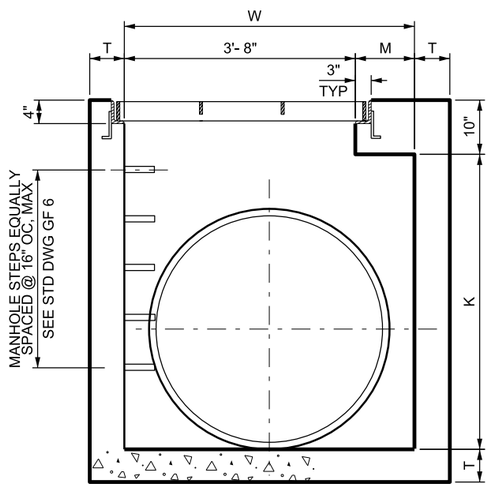

SECTION A-A

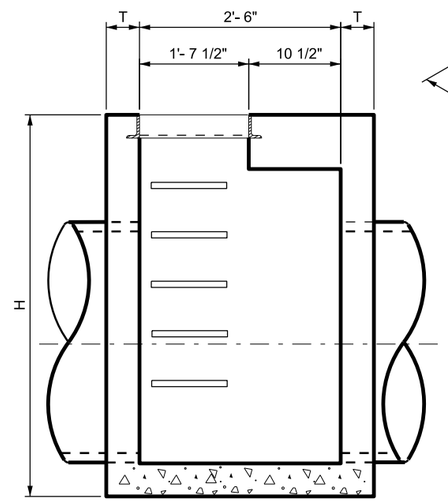

SECTION B-B

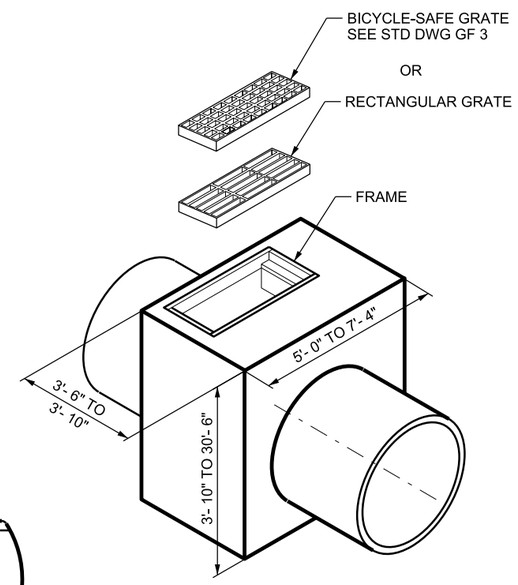

CATCH BASIN

GRATE AND FRAME APPLICATION

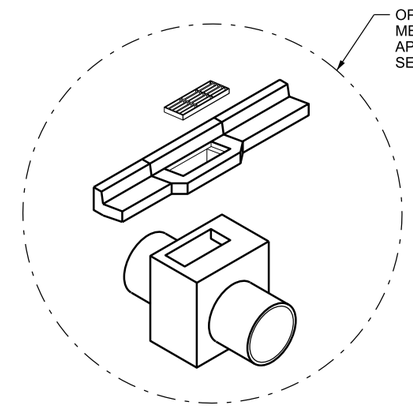

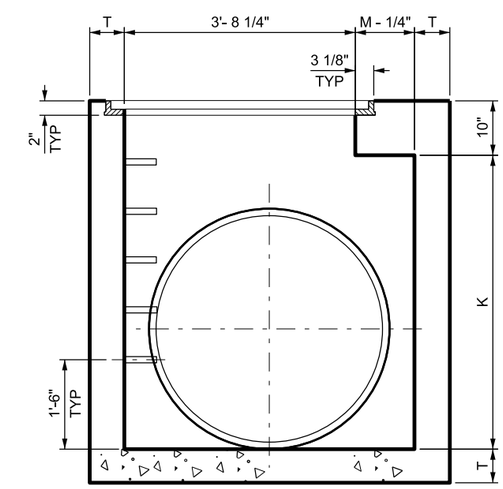

SECTION A-A

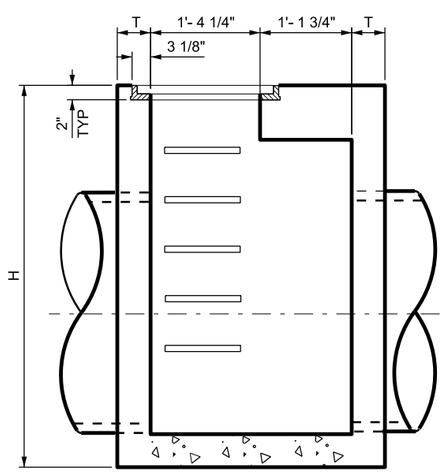

SECTION B-B

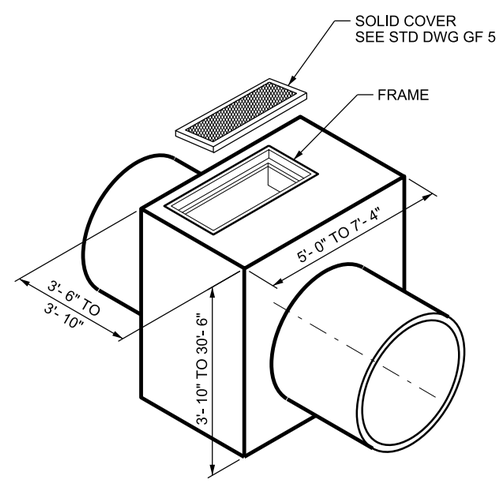

CLEANOUT BOX

SOLID COVER APPLICATION

DESIGN DATA

HL-93 IN ACCORDANCE WITH AASHTO LRFD BRIDGE DESIGN AND INTERIM SPECIFICATIONS

STRUCTURAL STEEL: Fy = 36,000 psi

STRUCTURAL CONCRETE: f 'c = 4,000 psi; fy = 60,000 psi; n = 8

QUANTITIES

STRUCTURAL CONCRETE
REINFORCING STEEL
} SEE SCHEDULE OF INSTALLATION

INDEX OF SHEETS

(CB 10A) 1- SITUATION & LAYOUT

(CB 10B) 2- SECTION DETAILS

(CB 10C) 3- SCHEDULE OF INSTALLATION 42-60 INCH RCP 48-72 INCH CMP

NOTES

1. USE COATED DEFORMED-CARBON REINFORCING STEEL BARS CONFORMING TO AASHTO M 284 OR M 111 AND M 31 GRADE 60 RESPECTIVELY.
2. FIELD CUT AND BEND REINFORCING STEEL AS NECESSARY TO CLEAR PIPES AND MAINTAIN 2 INCH COVER. REPAIR ANY DAMAGE OR CUTS TO THE COATING ON REINFORCING BARS.
3. USE CLASS AA (AE) CONCRETE.
4. USE TYPE II CEMENT (LOW ALKALI).
5. PROVIDE 2 INCH CONCRETE COVER TO REINFORCING STEEL.
6. SEE ROADWAY PLANS FOR NUMBER, LOCATION, AND SIZE OF PIPE.
7. CENTER PIPE IN BOX OPENING. USE APPROVED NON-SHRINK GROUT TO SEAL OPENING AROUND PIPE OR USE APPROVED PIPE MANUFACTURER'S PIPE BOOT.
8. PROVIDE 3/4 INCH CHAMFER ON ALL EXPOSED CONCRETE CORNERS.
9. SEE STD DWG GF 3 AND GF 5 FOR GRATE AND FRAME.
10. ADJUST FINISHED GRADE ELEVATION OF BOX AS REQUIRED FOR CURB AND GUTTER APPLICATION . INCLUDE CONCRETE QUANTITIES FOR CURB AND GUTTER IN ROADWAY QUANTITIES.
11. USE 8 INCH LONG, #4 BARS @ 8 INCH O.C. MAX DRILL AND EPOXY 4 INCHES INTO BOX OR EXTEND BOX REBARS 4 INCHES INTO THE CURB AND GUTTER, TO ATTACH CURB AND GUTTER TO BOX.

REVISIONS

NO.	DATE	APPR.	REMARKS

UTAH DEPARTMENT OF TRANSPORTATION

STANDARD DRAWINGS FOR ROAD AND BRIDGE CONSTRUCTION

SALT LAKE CITY, UTAH

RECOMMENDED FOR APPROVAL — JAN.01.2017 DATE

CHAIRMAN STANDARDS COMMITTEE APPROVED — JAN.01.2017 DATE

DEPUTY DIRECTOR

STANDARD DRAWING TITLE

STANDARD CATCH BASIN AND CLEANOUT BOX SITUATION AND LAYOUT

STD. DWG. NO.

CB 10A

DGN File: L:\Standard_Drawings\Imperial\2017 Approved\1-All Drawings\CB10A.dgn

28-NOV-2016

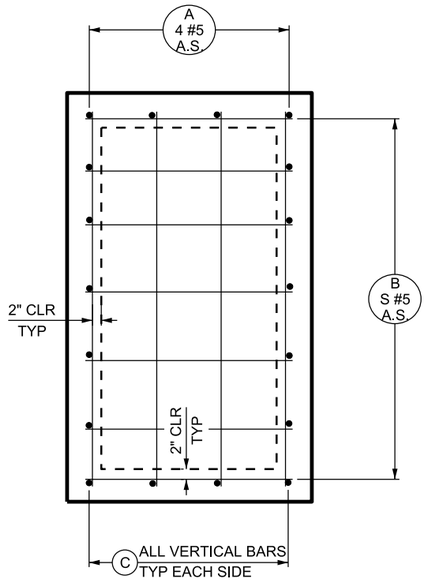

PLAN - BOTTOM SLAB

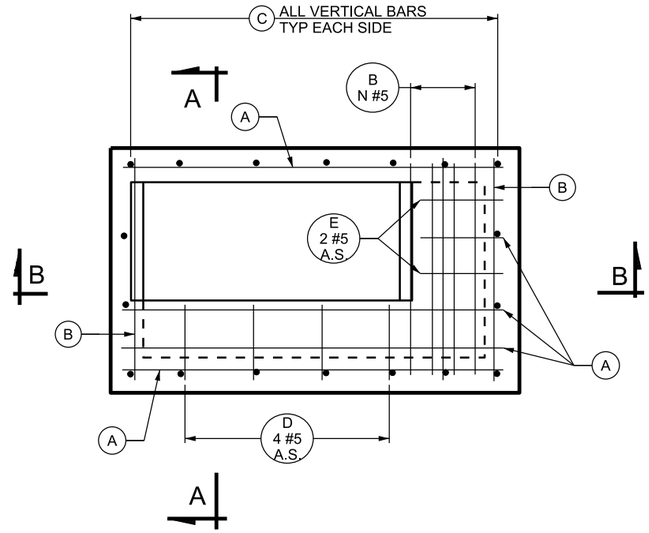

PLAN - TOP SLAB

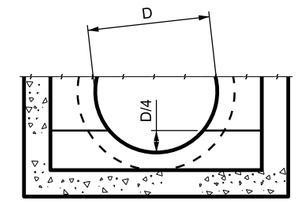

FORMED INVERT

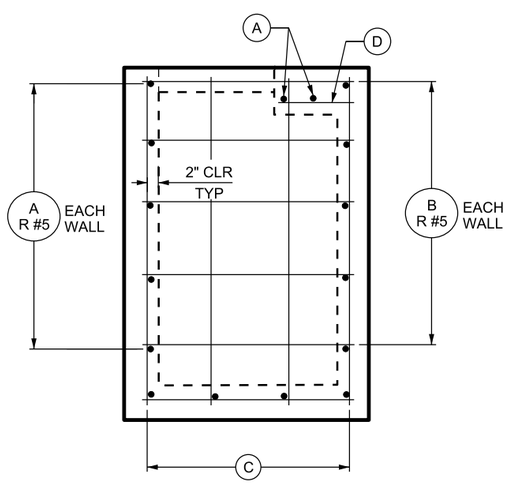

SECTION A-A

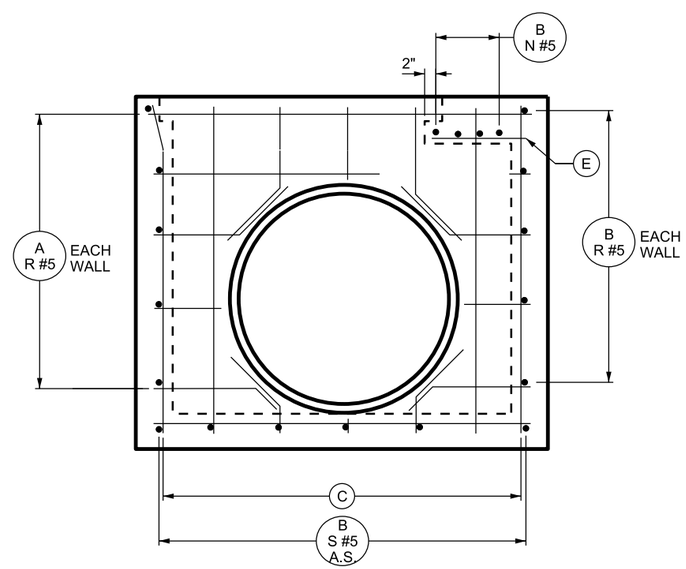

SECTION B-B

NOTES

1. QUANTITIES SHOWN IN THE SCHEDULE OF INSTALLATION ARE FOR ONE UNIT ONLY.
2. FORM THE BOTTOM SLAB OF THE BOX TO FIT THE INVERT OF THE PIPE WHEN REQUIRED ACCORDING TO THE DETAIL SHOWN ON THIS SHEET. SEE TABLE 3 ON STD DWG CB 10C FOR ADDITIONAL CONCRETE QUANTITIES.
3. DEDUCT CONCRETE DISPLACED BY PIPE FROM THOSE CONCRETE QUANTITIES GIVEN IN SCHEDULE OF TABLE 1 ON STD DWG CB 10C.
4. SEE TABLE 3 ON STD DWG CB 10C FOR ADDITIONAL CONCRETE QUANTITIES WHEN FORMED INVERT IS REQUIRED.
5. PROVIDE 2 INCH CONCRETE COVER TO REINFORCING STEEL EXCEPT WHERE NOTED OTHERWISE.
6. ALL DIMENSIONS ARE OUT TO OUT OF BARS UNLESS OTHERWISE SHOWN.
7. WEIGHT QUANTITIES FOR GRATE AND FRAME, AND SOLID COVER AND FRAME ARE SHOWN FOR INFORMATION ONLY.
8. SEE STD DWG CB 10A FOR DIMENSIONS.
9. PIPE DIAMETERS SHOWN IN TABLES AND SCHEDULE ARE INSIDE DIAMETERS.
10. MAXIMUM PIPE DIMENSIONS SHOWN IN SCHEDULE OF INSTALLATION ARE FOR PIPES PERPENDICULAR TO WALLS OF BOX. DETERMINE CLEARANCES FOR SKEWED PIPES.
11. SEE STD DWG GF 6 FOR MANHOLE STEP DETAILS.
12. USE #5 BARS FOR ALL REINFORCING @ 12 INCHES UNLESS OTHERWISE SHOWN.
13. ADD 0.023 CU YDS OF CONCRETE TO THOSE QUANTITIES GIVEN IN SCHEDULE OF INSTALLATION AND ADD 3 INCH TO EACH D-BAR, AND 1.0 LB TO REINFORCING STEEL QUANTITIES WHEN SOLID COVER IS REQUIRED.
14. USE COATED DEFORMED-CARBON REINFORCING STEEL BARS CONFORMING TO AASHTO M 284, OR M 111 AND M 31 GRADE 60 RESPECTIVELY.
15. CHAMFER ALL EXPOSED CONCRETE CORNERS ¾ INCH EXCEPT WHERE NOTED OTHERWISE.
16. USE CLASS AA(AE) CONCRETE EXCEPT WHERE SPECIFIED OTHERWISE.

REVISIONS

NO.	DATE	APPR.	REMARKS

UTAH DEPARTMENT OF TRANSPORTATION
STANDARD DRAWINGS FOR ROAD AND BRIDGE CONSTRUCTION
SALT LAKE CITY, UTAH

RECOMMENDED FOR APPROVAL — JAN.01.2017 DATE
CHAIRMAN STANDARDS COMMITTEE APPROVED — JAN.01.2017 DATE
DEPUTY DIRECTOR

STANDARD CATCH BASIN AND CLEANOUT BOX SECTION DETAILS

STANDARD DRAWING TITLE

STD. DWG. NO.
CB 10B

DGN File: L:\Standard Drawings\Imperial\2017 Approved\1-All Drawings\CB10B.dgn
28-NOV-2016

COLUMN "A"

LINE	NO of MANHOLE STEPS	R	DIMENSIONS H	DIMENSIONS K	DIMENSIONS T	REINFORCING STEEL A LENGTH	A NO	B LENGTH	B NO	C #16 LENGTH	D #4 LENGTH	QUANTITIES CONCRETE CUBIC YARD	QUANTITIES REINFORCING STEEL LBS
1	–	4	3'-10	2'-6	6"	4'-8	14	3'-2	15	3'-5	1'-0	1.365	179
2	2	4	4'-4	3'-0			14		15	3'-11		1.504	187
3	2	5	4'-10	3'-6			16		17	4'-5		1.642	212
4	3	5	5'-4	4'-0			16		17	4'-11		1.781	220
5	3	6	5'-10	4'-6			18		19	5'-5		1.920	245
6	4	6	6'-4	5'-0			18		19	5'-11		2.059	253
7	4	7	6'-10	5'-6			20		21	6'-5		2.198	278
8	5	7	7'-4	6'-0			20		21	6'-11		2.337	286
9	5	8	7'-10	6'-6			22		23	7'-5		2.476	311
10	6	8	8'-4	7'-0			22		23	7'-11		2.615	319
11	6	9	8'-10	7'-6			24		25	8'-5		2.754	344
12	7	9	9'-4	8'-0			24		25	8'-11		2.892	352
13	7	10	9'-10	8'-6			26		27	9'-5		3.031	377
14	8	10	10'-4	9'-0			26		27	9'-11		3.170	385
15	8	11	10'-10	9'-6			28		29	10'-5		3.309	410
16	9	11	11'-4	10'-0			28		29	10'-11		3.448	418
17	9	12	11'-10	10'-6			30		31	11'-5		3.587	443
18	10	12	12'-4	11'-0	6"	4'- 8	30	3'-2	31	11'-11	1'-0	3.726	451
19	10	13	12'-11	11'-6	7"	4'-10	32	3'-4	33	12'-6	1'-1	4.610	489
20	11	13	13'-5	12'-0			32		33	13'-0		4.775	498
21	11	14	13'-11	12'-6			34		35	13'-6		4.941	523
22	12	14	14'-5	13'-0			34		35	14'-0		5.107	531
23	12	15	14'-11	13'-6			36		37	14'-6		5.272	552
24	13	15	15'-5	14'-0			36		37	15'-0		5.438	565
25	13	16	15'-11	14'-6			38		39	15'-6		5.604	590
26	14	16	16'-5	15'-0			38		39	16'-0		5.769	599
27	14	17	16'-11	15'-6			40		41	16'-6		5.935	624
28	15	17	17'-5	16'-0			40		41	17'-0		6.100	632
29	15	18	17'-11	16'-6			42		43	17'-6		6.266	658
30	16	18	18'-5	17'-0			42		43	18'-0		6.432	666
31	16	19	18'-11	17'-6			44		45	18'-6		6.597	692
32	17	19	19'-5	18'-0			44		45	19'-0		6.763	700
33	17	20	19'-11	18'-6			46		47	19'-6		6.929	725
34	18	20	20'-5	19'-0			46		47	20'-0		7.094	734
35	18	21	20'-11	19'-6			48		49	20'-6		7.260	759
36	19	21	21'-5	20'-0			48		49	21'-0		7.426	767
37	19	22	21'-11	20'-6			50		51	21'-6		7.591	793
38	20	22	22'-5	21'-0	7"	4'-10	50	3'-4	51	22'-0		7.757	801
39	20	23	23'-0	21'-6	8"	5'-0	52	3'-6	53	22'-7	1'-2	9.259	846
40	21	23	23'-6	22'-0			52		53	23'-1		9.452	855
41	21	24	24'-0	22'-6			54		55	23'-7		9.646	881
42	22	24	24'-6	23'-0			54		55	24'-1		9.839	889
43	22	25	25'-0	23'-6			56		57	24'-7		10.032	915
44	23	25	25'-6	24'-0			56		57	25'-1		10.226	924
45	23	26	26'-0	24'-6			58		59	25'-7		10.419	950
46	24	26	26'-6	25'-0			58		59	26'-1		10.613	958
47	24	27	27'-0	25'-6			60		61	26'-7		10.806	984
48	25	27	27'-6	26'-0			60		61	27'-1		11.000	992
49	25	28	28'-0	26'-6			62		63	27'-7		11.193	1018
50	26	28	28'-6	27'-0			62		63	28'-1		11.386	1027
51	26	30	29'-0	27'-6			66		67	28'-7		11.580	1071
52	27	30	29'-6	28'-0			66		67	29'-1		11.773	1079
53	27	32	30'-0	28'-6			70		71	29'-7		11.967	1123
54	28	34	30'-6	29'-0	8"	5'-0	74	3'-6	75	30'-1	1'-2	12.160	1167

N=1 S=6 W=4'-0 M=0'-4

COLUMN "B"

LINE	DIMENSIONS H	DIMENSIONS K	DIMENSIONS T	REINFORCING STEEL A LENGTH	A NO	B LENGTH	B NO	C #18 LENGTH	D #4 LENGTH	E #2 LENGTH	QUANTITIES CONCRETE CUBIC YARD	QUANTITIES REINFORCING STEEL LBS
1	—	—	—	—	–	—	–	—	—	—	—	—
2	—	—	—	—	–	—	–	—	—	—	—	—
3	—	—	—	—	–	—	–	—	—	—	—	—
4	—	—	—	—	–	—	–	—	—	—	—	—
5	—	—	—	—	–	—	–	—	—	—	—	—
6	6'-4	5'-0	6"	5'-8	18	3'-2	23	5'-11	1'-0	1'-6	2.417	301
7	6'-10	5'-6			20		25	6'-5			2.575	321
8	7'-4	6'-0			20		25	6'-11			2.732	338
9	7'-10	6'-6			22		27	7'-5			2.889	366
10	8'-4	7'-0			22		27	7'-11			3.047	375
11	8'-10	7'-6			24		29	8'-5			3.204	403
12	9'-4	8'-0			24		29	8'-11			3.362	412
13	9'-10	8'-6			26		31	9'-5			3.519	440
14	10'-4	9'-0			26		31	9'-11			3.675	450
15	10'-10	9'-6			28		33	10'-5			3.834	477
16	11'-4	10'-0			28		33	10'-11			3.991	486
17	11'-10	10'-6			30		35	11'-5			4.149	515
18	12'-4	11'-0	6"	5'-8	30	3'-2	35	11'-11	1'-0	1'-6	4.305	524
19	12'-11	11'-6	7"	5'-10	32	3'-4	37	12'-6	1'-1	1'-7	5.299	566
20	13'-5	12'-0			32		37	13'-0			5.486	575
21	13'-11	12'-6			34		39	13'-6			5.673	604
22	14'-5	13'-0			34		39	14'-0			5.861	613
23	14'-11	13'-6			36		41	14'-6			6.048	642
24	15'-5	14'-0			36		41	15'-0			6.235	651
25	15'-11	14'-6			38		43	15'-6			6.422	680
26	16'-5	15'-0			38		43	16'-0			6.609	689
27	16'-11	15'-6			40		45	16'-6			6.797	637
28	17'-5	16'-0			40		45	17'-0			6.984	727
29	17'-11	16'-6			42		47	17'-6			7.171	755
30	18'-5	17'-0			42		47	18'-0			7.358	765
31	18'-11	17'-6			44		49	18'-6			7.545	793
32	19'-5	18'-0			44		49	19'-0			7.733	803
33	19'-11	18'-6			46		51	19'-6			7.920	831
34	20'-5	19'-0			46		51	20'-0			8.107	841
35	20'-11	19'-6			48		53	20'-6			8.294	869
36	21'-5	20'-0			48		53	21'-0			8.481	878
37	21'-11	20'-6			50		55	21'-6			8.669	907
38	22'-5	21'-0	7"	5'-10	50	3'-4	55	22'-0	1'-1	1'-7	8.856	916
39	23'-0	21'-6	8"	6'-0	52	3'-6	57	22'-7	1'-2	1'-8	10.533	966
40	23'-6	22'-0			52		57	23'-1			10.752	975
41	24'-0	22'-6			54		59	23'-7			10.970	1004
42	24'-6	23'-0			54		59	24'-1			11.188	1014
43	25'-0	23'-6			56		61	24'-7			11.406	1043
44	25'-6	24'-0			56		61	25'-1			11.629	1052
45	26'-0	24'-6			58		63	25'-7			11.842	1082
46	26'-6	25'-0			58		63	26'-1			12.060	1091
47	27'-0	25'-6			60		65	26'-7			12.278	1120
48	27'-6	26'-0			60		65	27'-1			12.496	1130
49	28'-0	26'-6			62		67	27'-7			12.714	1159
50	28'-6	27'-0			62		67	28'-1			12.933	1168
51	29'-0	27'-6			66		71	28'-7			13.151	1217
52	29'-6	28'-0			66		71	29'-1			13.369	1227
53	30'-0	28'-6			70		75	29'-7			13.587	1276
54	30'-6	29'-0	8"	6'-0	74	3'-6	79	30'-1	1'-2	1'-8	13.805	1325

N=4 S=7 W=5'-0 M=1'-4

COLUMN "C"

LINE	DIMENSIONS H	DIMENSIONS K	DIMENSIONS T	REINFORCING STEEL A LENGTH	A NO	B LENGTH	B NO	C #22 LENGTH	D #4 LENGTH	E #2 LENGTH	QUANTITIES CONCRETE CUBIC YARD	QUANTITIES REINFORCING STEEL LBS
1	—	—	—	—	—	—	—	—	—	—	—	—
2	—	—	—	—	—	—	—	—	—	—	—	—
3	—	—	—	—	—	—	—	—	—	—	—	—
4	—	—	—	—	—	—	—	—	—	—	—	—
5	—	—	—	—	—	—	—	—	—	—	—	—
6	—	—	—	—	—	—	—	—	—	—	—	—
7	6'-10	5'-6	6"	6'-2	20	3'-2	26	6'-5	1'-0	2'-0	2.763	370
8	7'-4	6'-0			20		26	6'-11			2.930	382
9	7'-10	6'-6			22		28	7'-5			3.096	413
10	8'-4	7'-0			22		28	7'-11			3.263	424
11	8'-10	7'-6			24		30	8'-5			3.430	455
12	9'-4	8'-0			24		30	8'-11			3.596	466
13	9'-10	8'-6			26		32	9'-5			3.763	497
14	10'-4	9'-0			26		32	9'-11			3.930	509
15	10'-10	9'-6			28		34	10'-5			4.096	540
16	11'-4	10'-0			28		34	10'-11			4.263	551
17	11'-10	10'-6			30		36	11'-5			4.430	582
18	12'-4	11'-0	6"	6'-2	30	3'-2	36	11'-11	1'-0	2'-0	4.596	594
19	12'-11	11'-6	7"	6'-4	32	3'-4	38	12'-6	1'-1	2'-1	5.644	639
20	13'-5	12'-0			32		38	13'-0			5.842	651
21	13'-11	12'-6			34		40	13'-6			6.040	682
22	14'-5	13'-0			34		40	14'-0			6.238	694
23	14'-11	13'-6			36		42	14'-6			6.436	725
24	15'-5	14'-0			36		42	15'-0			6.634	737
25	15'-11	14'-6			38		44	15'-6			6.832	769
26	16'-5	15'-0			38		44	16'-0			7.030	780
27	16'-11	15'-6			40		46	16'-6			7.228	812
28	17'-5	16'-0			40		46	17'-0			7.426	823
29	17'-11	16'-6			42		48	17'-6			7.624	855
30	18'-5	17'-0			42		48	18'-0			7.822	866
31	18'-11	17'-6			44		50	18'-6			8.020	898
32	19'-5	18'-0			44		50	19'-0			8.215	909
33	19'-11	18'-6			46		52	19'-6			8.416	941
34	20'-5	19'-0			46		52	20'-0			8.615	952
35	20'-11	19'-6			48		54	20'-6			8.812	984
36	21'-5	20'-0			48		54	21'-0			9.011	996
37	21'-11	20'-6			50		56	21'-6			9.209	1027
38	22'-5	21'-0	7"	6'-4	50	3'-4	56	22'-0	1'-1	2'-1	9.407	1039
39	23'-0	21'-6	8"	6'-6"	52	3'-6	58	22'-7	1'-2	2'-2	11.171	1092
40	23'-6	22'-0			52		58	23'-1			11.401	1103
41	24'-0	22'-6			54		60	23'-7			11.632	1136
42	24'-6	23'-0			54		60	24'-1			11.862	1147
43	25'-0	23'-6			56		62	24'-7			12.093	1179
44	25'-6	24'-0			56		62	25'-1			12.323	1191
45	26'-0	24'-6			58		64	25'-7			12.554	1223
46	26'-6	25'-0			58		64	26'-1			12.784	1235
47	27'-0	25'-6			60		66	26'-7			13.015	1267
48	27'-6	26'-0			60		66	27'-1			13.245	1279
49	28'-0	26'-6			62		68	27'-7			13.476	1311
50	28'-6	27'-0			62		68	28'-1			13.706	1322
51	29'-0	27'-6			66		72	28'-7			13.937	1376
52	29'-6	28'-0			66		72	29'-1			14.167	1387
53	30'-0	28'-6			70		76	29'-7			14.398	1440
54	30'-6	29'-0	8"	6'-6	74	3'-6	80	30'-1	1'-2	2'-2	14.628	1493

N=5 S=7 W=5'-6 M=1'-10

COLUMN "D"

LINE	DIMENSIONS H	DIMENSIONS K	DIMENSIONS T	REINFORCING STEEL A LENGTH	A NO	B LENGTH	B NO	C #22 LENGTH	D #4 LENGTH	E #2 LENGTH	QUANTITIES CONCRETE CUBIC YARD	QUANTITIES REINFORCING STEEL LBS	LINE
1	—	—	—	—	–	—	–	—	—	—	—	—	1
2	—	—	—	—	–	—	–	—	—	—	—	—	2
3	—	—	—	—	–	—	–	—	—	—	—	—	3
4	—	—	—	—	–	—	–	—	—	—	—	—	4
5	—	—	—	—	–	—	–	—	—	—	—	—	5
6	—	—	—	—	–	—	–	—	—	—	—	—	6
7	—	—	—	—	–	—	–	—	—	—	—	—	7
8	7'-4	6'-0	6"	6'-8	20	3'-2	28	6'-11	1'-0	2'-6	3.127	400	8
9	7'-10	6'-6			22		30	7'-5			3.303	432	9
10	8'-4	7'-0			22		30	7'-11			3.479	443	10
11	8'-10	7'-6			24		32	8'-5			3.655	475	11
12	9'-4	8'-0			24		32	8'-11			3.831	487	12
13	9'-10	8'-6			26		34	9'-5			4.007	519	13
14	10'-4	9'-0			26		34	9'-11			4.182	530	14
15	10'-10	9'-6			28		36	10'-5			4.358	562	15
16	11'-4	10'-0			28		36	10'-11			4.534	573	16
17	11'-10	10'-6			30		38	11'-5			4.710	605	17
18	12'-4	11'-0	6"	6'-8	30	3'-2	38	11'-11	1'-0	2'-6	4.886	617	18
19	12'-11	11'-6	7"	6'-10	32	3'-4	40	12'-6	1'-1	2'-7	5.988	664	19
20	13'-5	12'-0			32		40	13'-0			6.197	675	20
21	13'-11	12'-6			34		42	13'-6			6.406	708	21
22	14'-5	13'-0			34		42	14'-0			6.615	719	22
23	14'-11	13'-6			36		44	14'-6			6.824	752	23
24	15'-5	14'-0			36		44	15'-0			7.032	764	24
25	15'-11	14'-6			38		46	15'-6			7.241	796	25
26	16'-5	15'-0			38		46	16-0			7.450	808	26
27	16'-11	15'-6			40		48	16'-6			7.659	840	27
28	17'-5	16'-0			40		48	17'-0			7.868	852	28
29	17'-11	16'-6			42		50	17'-6			8.076	885	29
30	18'-5	17'-0			42		50	18'-0			8.285	896	30
31	18'-11	17'-6			44		52	18'-6			8.494	929	31
32	19'-5	18'-0			44		52	19'-0			8.703	940	32
33	19'-11	18'-6			46		54	19'-6			8.912	973	33
34	20'-5	19'-0			46		54	20'-0			9.120	984	34
35	20'-11	19'-6			48		56	20'-6			9.329	1017	35
36	21'-5	20'-0			48		56	21'-0			9.538	1029	36
37	21'-11	20'-6			50		58	21'-6			9.747	1061	37
38	22'-5	21'-0	7"	6'-10	50	3'-4	58	22'-0	1'-1	2'-7	9.965	1073	38
39	23'-0	21'-6	8"	7'-0	52	3'-6	60	22'-7	1'-2	2'-8	11.808	1127	39
40	23'-6	22'-0			52		60	23'-1			12.051	1139	40
41	24'-0	22'-6			54		62	23'-7			12.294	1172	41
42	24'-6	23'-0			54		62	24'-1			12.536	1184	42
43	25'-0	23'-6			56		64	24'-7			12.779	1217	43
44	25'-6	24'-0			56		64	25'-1			13.022	1228	44
45	26'-0	24'-6			58		66	25'-7			13.265	1262	45
46	26'-6	25'-0			58		66	26'-1			13.508	1273	46
47	27'-0	25'-6			60		68	26'-7			13.750	1307	47
48	27'-6	26'-0			60		68	27'-1			13.993	1318	48
49	28'-0	26'-6			62		70	27'-7			14.236	1352	49
50	28'-6	27'-0			62		70	28'-1			14.479	1363	50
51	29'-0	27'-6			66		74	28'-7			14.722	1418	51
52	29'-6	28'-0			66		74	29'-1			14.964	1430	52
53	30'-0	28'-6			70		78	29'-7			15.207	1485	53
54	30'-6	29'-0	8"	7'-0	74	3'-6	82	30'-1	1'-2	2'-8	15.450	1540	54

N=6 S=8 W=6'-0 M=2'-4

TABLE 1 : CONCRETE DISPLACED BY PIPES:

PIPE SIZES RCP	PIPE SIZES CMP	6" CU YD	7" CU YD	8" YD
42"	48"	0.233	0.271	0.310
48"	60"	0.340	0.396	0.453
54"	66"	0.427	0.498	0.569
60"	72"	0.524	0.611	0.698
	54"	0.295	0.344	0.393

TABLE 2 : MAXIMUM PIPE SIZE TO BE USED:

	RCP	CMP
COLUMN A	42"	48"
COLUMN B	48"	60"
COLUMN C	54"	66"
COLUMN D	60"	72"

TABLE 3 : CONCRETE NEEDED FOR FORMED INVERT:

PIPES SIZES	RCP CU YD	CMP CU YD
42"	0.273	---
48"	0.428	0.143
54"	---	---
60"	0.617	0.223
66"	---	0.270
72"	---	0.322

STRUCTURAL STEEL :
RECTANGULAR GRATE & FRAME = 340 LBS
BICYCLE- SAFE GRATE & FRAME = 365 LBS
SOLID COVER & FRAME = 474 LBS

REVISIONS

NO.	DATE	APPR.	REMARKS

UTAH DEPARTMENT OF TRANSPORTATION
STANDARD DRAWINGS FOR ROAD AND BRIDGE CONSTRUCTION
SALT LAKE CITY, UTAH

RECOMMENDED FOR APPROVAL — DATE JAN.01, 2017
CHAIRMAN STANDARDS COMMITTEE APPROVED — DATE JAN.01, 2017
DEPUTY DIRECTOR

STANDARD CATCH BASIN AND CLEANOUT BOX
SCHEDULE OF INSTALLATION
42 TO 60 INCH RCP
48 TO 72 INCH CMP
STANDARD DRAWING TITLE

STD. DWG. NO.
CB 10C

28-NOV-2016 DGN File: L:\Standard Drawings\Imperial\2017 Approved\1-All Drawings\CB10C.dgn

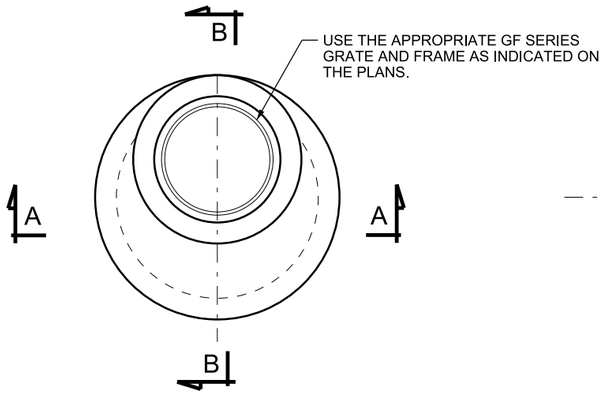

PLAN

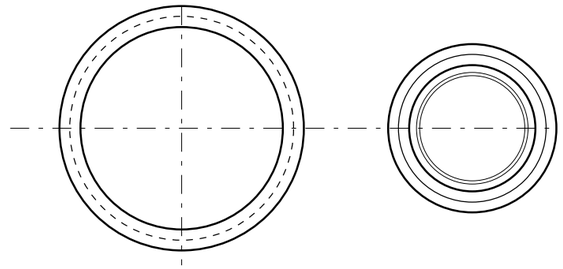

SECTION C-C **SECTION D-D**

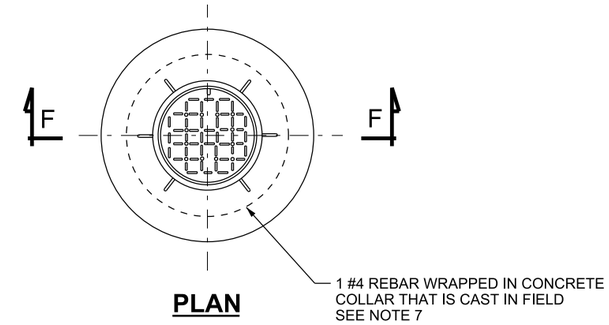

PLAN

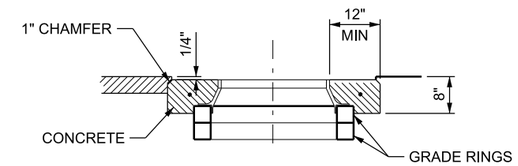

SECTION F-F

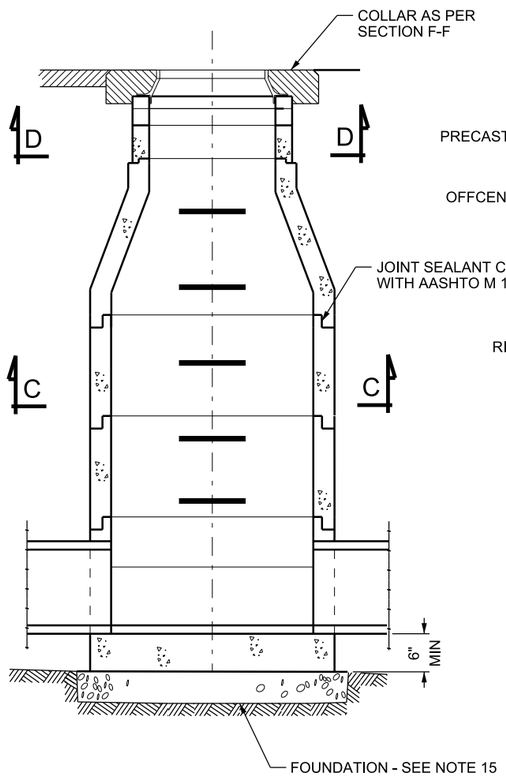

SECTION A-A

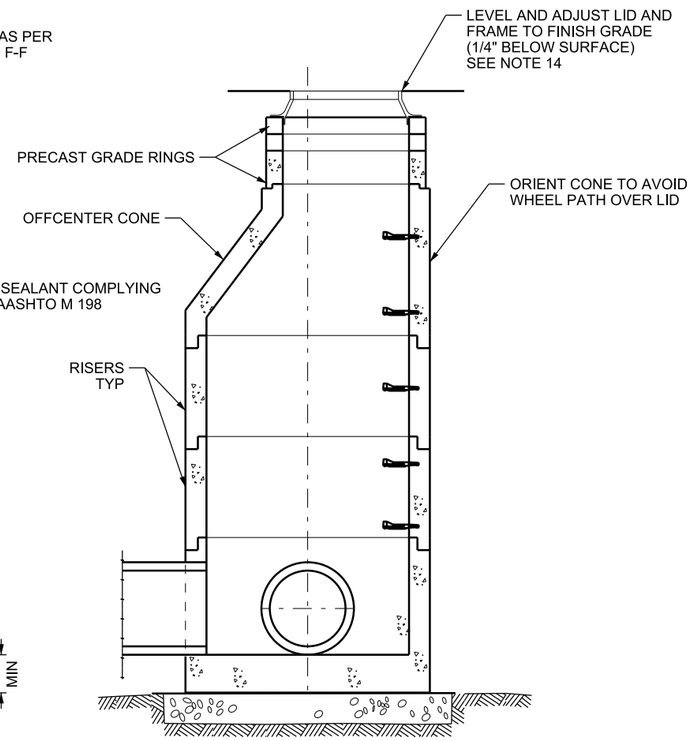

SECTION B-B

MAX PIPE O.D.		
DIA	45 DEG ANGLE	90 DEG ANGLE
4'- 0"	27"	18"
5'- 0"	36"	24"

PRECAST SECTIONS	MAX HEIGHT
GRADE RINGS	8"
COMBINED GRADE RINGS AND LID	18"
CONES	36"
RISERS	48"

DESIGN DATA

STRUCTURAL STEEL: Fy = 36,000 psi

STRUCTURAL CONCRETE: f 'c = 4,000 psi; fy = 60,000 psi; n = 8

NOTES

1. PROVIDE PRECAST CONCRETE STANDARD MANHOLE SECTIONS THAT CONFORM TO AASHTO M 199 (ASTM C 478) EXCEPT THAT THE MINIMUM WALL THICKNESS WILL BE 3 INCHES.
2. USE DEFORMED-CARBON REINFORCING STEEL BARS CONFORMING TO M 31, GRADE 60 OR WELDED WIRE REINFORCING CONFORMING TO AASHTO M 55 OR AASHTO M 221.
3. COATED STEEL IS NOT REQUIRED FOR PRECAST MANHOLES.
4. USE CLASS AA (AE) CONCRETE.
5. USE TYPE II CEMENT (LOW ALKALI).
6. PROVIDE 1 INCH OF CONCRETE COVER TO REINFORCING STEEL IN MANHOLE WALLS AND CONE.
7. PROVIDE 2 INCHES OF CONCRETE COVER TO REINFORCING STEEL IN MANHOLE BASE AND COLLAR.
8. PLACE STEPS BEGINNING NOT LESS THAN 12 INCHES BELOW FINISH GRADE AND PLACE ADDITIONAL STEPS ACCORDING TO STD DWG GF 6. MANUFACTURER WILL ADJUST GRADE RINGS AND RISER HEIGHTS TO ACCOMMODATE UNIFORM SPACING OF STEPS ACCORDING TO STD DWG GF 6.
9. USE 3, 4, 6, OR 8 INCH GRADE RINGS FOR RISERS.
10. SEE ROADWAY PLANS FOR NUMBER, LOCATION, AND SIZE OF PIPE.
11. REMOVE THE CONE AND GRADE RINGS AND ADJUST THE MANHOLE ELEVATION WITH THE APPROPRIATE MANHOLE SECTION IF THE REQUIRED MANHOLE ADJUSTMENT IS MORE THAN 1 FT. MATCH FINISH GRADE FOR THE CONE SECTION AND GRADE RINGS, FRAME AND LID.
12. REMOVE DEBRIS FROM MANHOLE AND PIPE INVERTS.
13. REPAIR OR REPLACE MANHOLE SECTIONS, CONES, AND GRADE RINGS DAMAGED BY CONSTRUCTION TO THE SATISFACTION OF THE ENGINEER.
14. USE STD DWG GF 2 FOR RING AND LID UNLESS OTHER GF SERIES AS SHOWN.
15. PROVIDE HYDRAULIC CEMENT MORTAR ACCORDING TO ASTM C 1329.
16. DO NOT OVER EXCAVATE. PLACE 6 INCH MIN UTBC BEDDING ACCORDING TO STANDARD SPECIFICATION 02721 ON FIRM SUBGRADE. DO NOT USE CRUSHED ROCK IN ACTIVE WATER TABLE WITHOUT APPROVAL OF THE ENGINEER.
17. CAST FORMED INVERT TO BE POURED IN PLANT, WHEN SPECIFIED.
18. MANUFACTURE MANHOLE RISERS, BASES, CONES, AND GRADE RINGS INCLUDING STEEL REINFORCING WHERE REQUIRED ACCORDING TO ASTM C 478.

REVISIONS

NO.	DATE	APPR.	REMARKS

UTAH DEPARTMENT OF TRANSPORTATION
STANDARD DRAWINGS FOR ROAD AND BRIDGE CONSTRUCTION
SALT LAKE CITY, UTAH

RECOMMENDED FOR APPROVAL — JAN.01.2017 DATE
CHAIRMAN STANDARDS COMMITTEE APPROVED — JAN.01.2017 DATE
DEPUTY DIRECTOR

PRECAST CONCRETE STANDARD MANHOLE
STANDARD DRAWING TITLE

STD. DWG. NO.
CB 11

DGN File:L:\Standard Drawings\Imperial\2017 Approved\1-All Drawings\CB11.dgn
28-NOV-2016

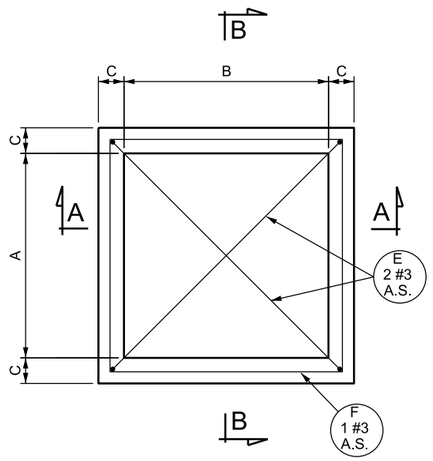

PLAN

PRECAST DRAINAGE BOXES
SMALL STANDARD SIZES

BOX SIZE	A	B	C	D
1'- 6" x 4'- 0"	18"	48"	6"	6"
2'-0" x 2'-0"	24"	24"	6"	6"
2'-0' x 3'-0"	24"	36"	6"	6"
2'-6" x 4'-0"	30"	48"	6"	6"
3'-0" x 3'-0"	36"	36"	6"	6"
3'-0" x 3'-6"	36"	42"	6"	6"
4'-0" x 4'-0"	48"	48"	6"	6"

OTHER SIZE BOXES WITH DIFFERENT A AND B DIMENSIONS (LESS THAN 48") ARE ACCEPTABLE

REINFORCING STEEL LAYOUT

BAR E	BAR F
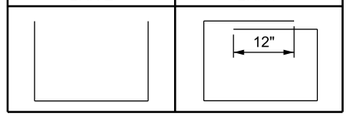	

RISERS
AN UNREINFORCED PRECAST CONCRETE RISER MATCHING DRAINAGE BOX SIZES MAY BE USED FOR BOXES DEEPER THAN 4'-0".

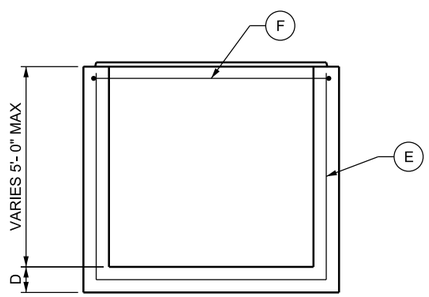

SECTION A-A

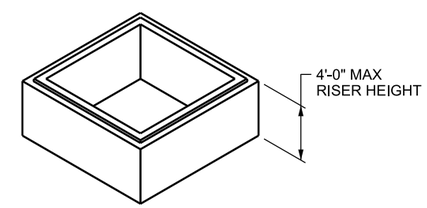

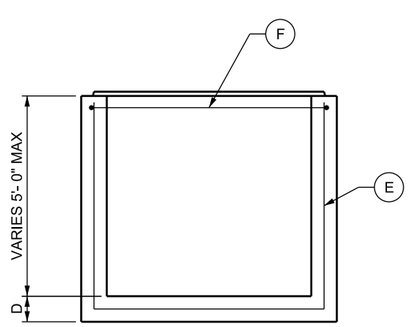

SECTION B-B

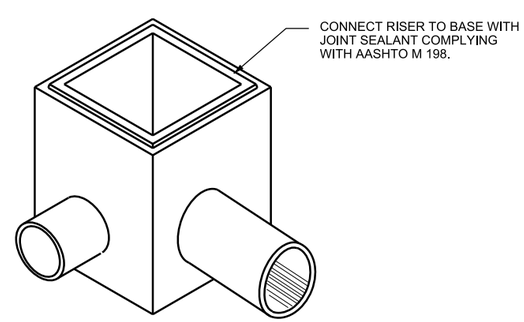

ISOMETRIC VIEW

DESIGN DATA

STRUCTURAL CONCRETE:	f 'c = 4,000 psi; fy = 60,000; n = 8
SOIL DENSITY:	130 PCF
EQUIVALENT SOIL FLUID PRESSURE:	55 PCF
DEPTH TO WATER TABLE:	5 FEET
DEPTH TO BOTTOM OF BASE:	8 FEET

NOTES

1. THIS DRAWING IS A PRECAST ALTERNATE TO THE CAST-IN-PLACE SIZING AND STRUCTURAL DETAILS IN CB SERIES STD DWG. USE DEFORMED REINFORCING STEEL BARS TO CONFORMING TO AASHTO M 31 GRADE 60 OR WELDED WIRE FABRIC CONFORMING TO AASHTO M 55. COATED STEEL IS NOT REQUIRED FOR SMALL DRAINAGE STRUCTURES ON THIS DRAWING.
2. USE CLASS AA (AE) CONCRETE.
3. USE TYPE II CEMENT (LOW ALKALI).
4. PROVIDE 2 INCH CONCRETE COVER TO REINFORCING STEEL.
5. SEE ROADWAY PLANS FOR NUMBER LOCATION, AND SIZE OF PIPE.
6. USE THE APPROPRIATE GF SERIES GRATE AND FRAME AS INDICATED ON THE PLANS.
7. PROVIDE SUFFICIENT LIFTING POINTS FOR A SAFE INSTALLATION. LOCATE LIFTING DEVICES TO AVOID INTERFERENCE WITH THE REINFORCING STEEL. SUPPLY A MINIMUM OF AT LEAST TWO ENGINEERED LIFTING POINTS PER SECTION. DESIGN LIFTING DEVICES TO PCI DESIGN HANDBOOK. PROPERLY ATTACH TO ALL PROVIDED LIFTING POINTS. LIFT ONLY FROM ENGINEERED LIFTING POINTS.
8. DO NOT USE DRAINAGE BOXES AND RISER COMBINATIONS THAT EXCEED EIGHT FT FROM FINISHED GRADE TO THE BOTTOM OF THE BOX.
9. PROVIDE CORE HOLES THAT ARE A MINIMUM OF PIPE OUTER DIAMETER PLUS 4 INCHES.
10. CUT CORE HOLES AT THE MANUFACTURING PLANT UNLESS FIELD CORE HOLES ARE AUTHORIZED BY THE ENGINEER. CENTER CORE HOLES TO LEAVE 2 INCHES OF CONCRETE MEASURED FROM INSIDE WALL OF THE BOX TO CORE HOLE LOCATE CORE HOLE VERTICALLY TO LEAVE A MINIMUM OF 5 INCHES OF CONCRETE DIRECTLY ABOVE THE CORE HOLE TO THE TOP OF THE BOX. CUT CORE HOLE SO THAT THE BOTTOM OF THE HOLE IS AT OR ABOVE THE FLOOR ELEVATION OF THE BOX.
11. DEVIATIONS FROM CORE HOLE TOLERANCES IN NOTES 9 AND 10 REQUIRE SHOP DRAWINGS. SHOP DRAWINGS WILL IDENTIFY LIFTING POINT NUMBER AND LOCATION.
12. DESIGN PRECAST LIDS FOR HL-93 LIVE LOADS IN ACCORDANCE WITH AASHTO LRFD BRIDGE DESIGN AND INTERIM SPECIFICATIONS. SUBMIT STAMPED DESIGN DRAWINGS, SEALED BY PROFESSIONAL ENGINEER OR PROFESSIONAL STRUCTURAL ENGINEER LICENSED IN THE STATE OF UTAH, TO THE ENGINEER.
13. DO NOT USE THIS DRAWING WHEN THE WATER TABLE IS WITHIN 5 FT OF FINISHED GRADE.

REVISIONS

NO.	DATE	APPR.	REMARKS

UTAH DEPARTMENT OF TRANSPORTATION
STANDARD DRAWINGS FOR ROAD AND BRIDGE CONSTRUCTION
SALT LAKE CITY, UTAH

RECOMMENDED FOR APPROVAL — JAN.01.2017 DATE
CHAIRMAN STANDARDS COMMITTEE APPROVED — JAN.01.2017 DATE
DEPUTY DIRECTOR

PRECAST CONCRETE DRAINAGE BOX
STANDARD DRAWING TITLE

STD. DWG. NO.
CB 12

DGN File:L:\Standard_Drawings\Imperial\2017 Approved\1-All Drawings\CB12.dgn
28-NOV-2016

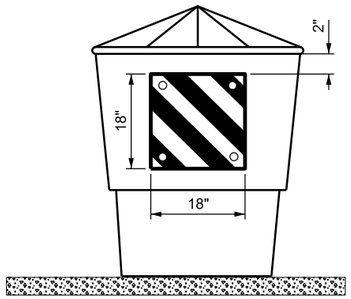

PLACE THE APPROPRIATE OBJECT MARKER PANEL OR SHEETING 2 INCHES FROM THE TOP OF THE LEAD BARREL OF THE ARRAY.

MARKER POST NOT REQUIRED.

CRASH CUSHION TYPE E

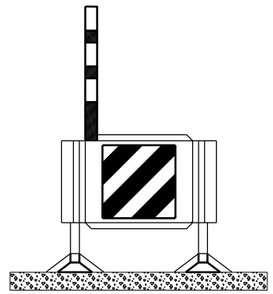

OBJECT MARKER PLATE OR SHEETING: ATTACH TO THE TOP FRONT AND SIDE OF UNIT NEAREST THE APPROACH LANE OF TRAFFIC. IN A GORE AREA CENTER OBJECT MARKER.

CRASH CUSHIONS TYPE A,B, & D

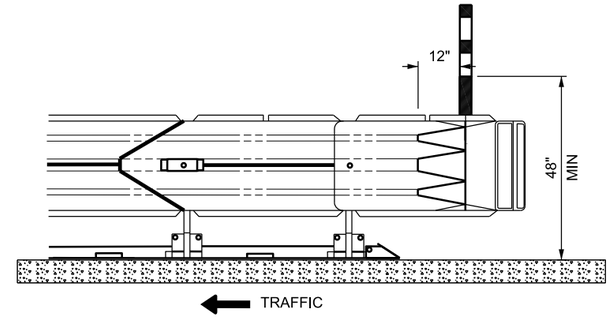

CRASH CUSHIONS TYPE A,B, & D

MARKER POST:

MOUNT ON THE SIDE OF THE APPROACH TRAFFIC, 12 INCHES FROM THE BACK EDGE OF PLASTIC NOSE PIECE. IN GORE AREAS MOUNT ON BOTH SIDES.

END TREATMENT TYPE F

QUADTREND 350 SYSTEM HAS A BELTED OR PLASTIC NOSE PIECE AND STEEL POSTS.OBJECT MARKER MOUNTING SIMILAR TO TYPE H AND MARKER POST IS MOUNTED ON THE NOSE PIECE SIMILAR TO TYPE B.

BEAT-SSCC:
INSTALL OBJECT MARKER PANEL ONTO IMPACT HEAD.
INSTALL MARKER POST ON POST 1 OF THE SYSTEM.

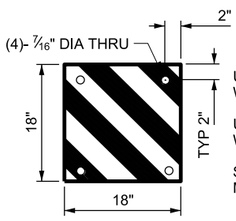

USE A 0.032 GAUGE ALUMINUM MARKER PLATE WITH APPROPRIATE MARKER SHEETING

USE FOUR 3/8 INCH x 1 INCH ZINC PLATED BOLTS WITH WASHERS AND NUTS TO MOUNT PLATE.

SELF ADHESIVE SHEETING WITH APPROPRIATE OBJECT MARKER DESIGNATION CAN BE USED AS A SUBSTITUTE.

MARKER PLATE

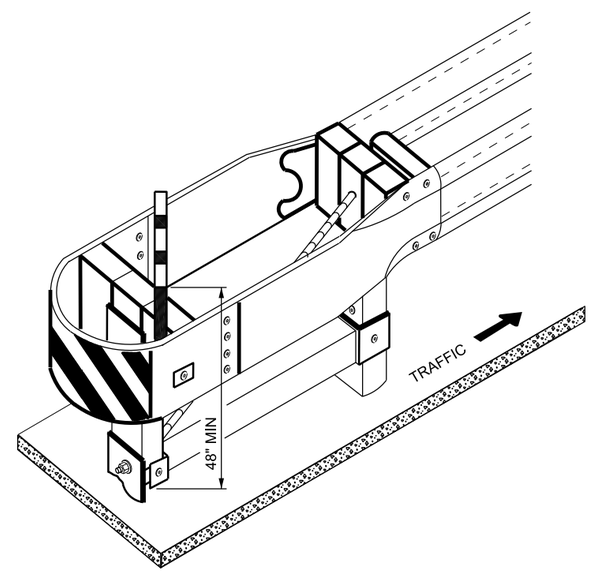

C.A.T. OBJECT MARKER PLATE OR SHEETING:
ATTACH TO THE FRONT OF SYSTEM TOP AND OFFSET 6 INCHES FROM CENTER TOWARD THE APPROACH LANE OF TRAFFIC.

FLEAT-MT:
INSTALL AN OBJECT MARKER PANEL ONTO EACH OF THE IMPACT HEADS.
INSTALL MARKER POST ON POST 1 OF THE SYSTEM.

CRASH CUSHION TYPE C

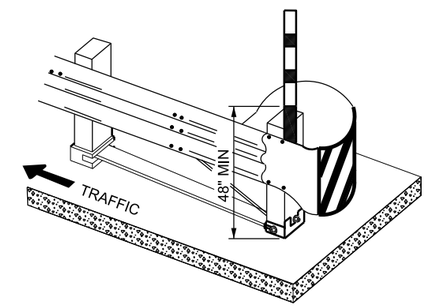

END TREATMENT TYPE H

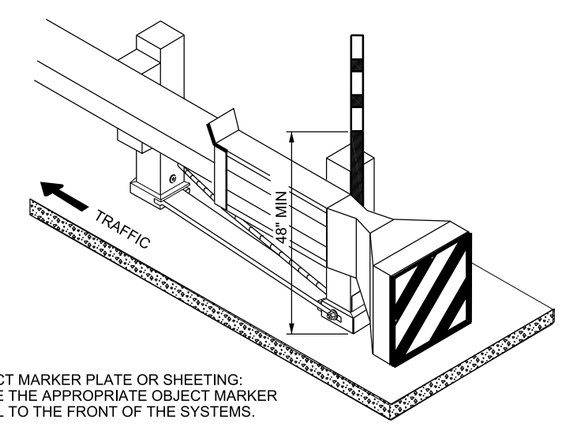

OBJECT MARKER PLATE OR SHEETING:
PLACE THE APPROPRIATE OBJECT MARKER PANEL TO THE FRONT OF THE SYSTEMS.

END TREATMENT TYPE G

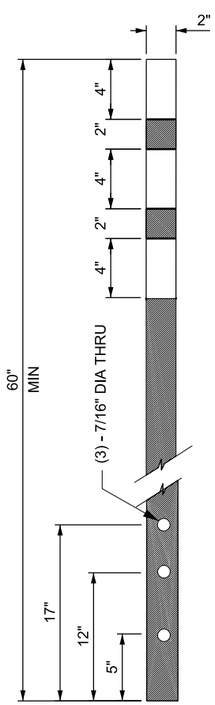

MARKER POST

USE YELLOW BANDS OF REFLECTIVE SHEETING AS SPECIFIED BY STANDARD SPECIFICATION 02890, PART 2. PLACE BANDS AT THE TOP OF THE POST WITH A 2 INCH SPACE BETWEEN THE 1ST AND 2ND BAND AND THE 2ND AND 3RD BAND. DRILL THREE MOUNTING HOLES, 7/16 INCH IN DIAMETER, MEASURED FROM THE BOTTOM UP 5 INCHES, 12 INCHES, AND 17 INCHES.

MARKER POST MOUNTING

MOUNT MARKER POST 48 INCHES FROM THE BOTTOM OF THE THIRD YELLOW BAND TO GROUND LEVEL. DO NOT COLLAPSE MARKER POST WHEN SECURING TO SYSTEM.

WOOD POST: PLACE MARKER POST ON THE FRONT OF THE FIRST POST OF SYSTEM AND SECURE WITH THREE 3/8 x 4 INCH ZINC PLATED LAG BOLTS AND WASHERS.

METAL POST: PLACE MARKER POST ON THE FRONT OF THE FIRST POST OF SYSTEM AND SECURE WITH THREE 3/8 x 3 INCH ZINC PLATED BOLTS WITH NUTS AND WASHERS.

PLASTIC NOSE PIECES: PLACE MARKER POST 12 INCHES FORWARD FROM THE BACK EDGE OF THE NOSE PIECE AND SECURE WITH THREE 3/8 x 3 INCH ZINC PLATED BOLTS WITH WASHERS.

DESIGN-ONLY NOTE:

A. MARKER POST IS OPTIONAL WHEN SNOW ACCUMULATION IS NOT A CONCERN.

NOTES:

1. USE MARKER POST UNLESS OTHERWISE SPECIFIED.

2. COMPLY WITH STANDARD SPECIFICATION 02890 FOR FLEXIBLE SHEETING.

MARKER POST

REVISIONS			
NO.	DATE	APPR.	REMARKS

UTAH DEPARTMENT OF TRANSPORTATION
STANDARD DRAWINGS FOR ROAD AND BRIDGE CONSTRUCTION
SALT LAKE CITY, UTAH

RECOMMENDED FOR APPROVAL — JAN.01.2017 DATE
CHAIRMAN STANDARDS COMMITTEE APPROVED — JAN.01.2017 DATE
DEPUTY DIRECTOR

STANDARD DRAWING TITLE: CRASH CUSHION AND END TREATMENT MARKERS

STD. DWG. NO. CC 1

DGN File:L:\Standard Drawings\Imperial\2017 Approved\1-All Drawings\CC01.dgn
28-NOV-2016

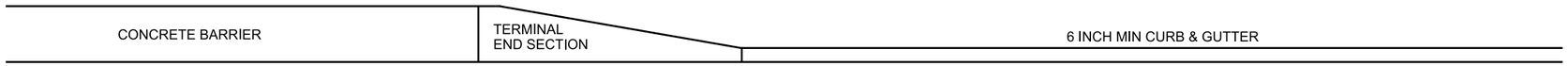

PROFILE VIEW

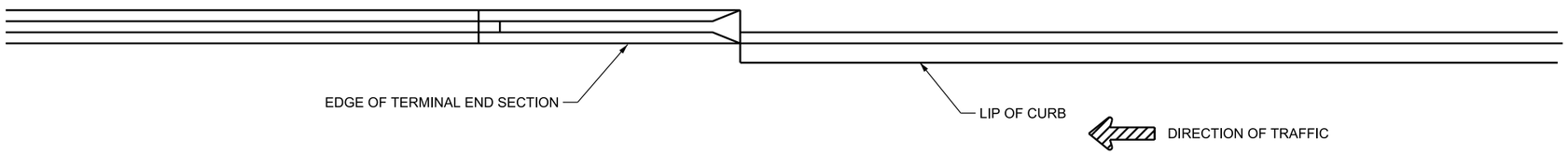

PLAN A1: DESIGN SPEED 40 MPH OR LESS

TABLE 1	
SPEED MPH	MIN LENGTH (L)
LESS THAN 40	50 FT
40 TO 55	70 FT
60 TO 80	100 FT

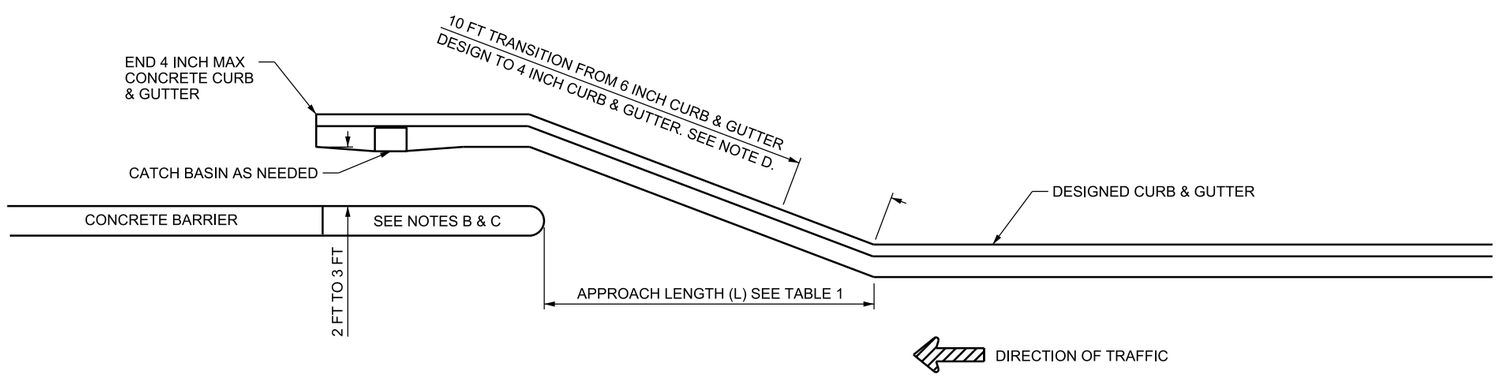

PLAN A2: DESIGN SPEED GREATER THAN 40 MPH

DESIGN-ONLY NOTES PLAN A2:

A. REFER TO GUIDELINES FOR CRASH CUSHION AND BARRIER END TREATMENTS FOR APPROVED SYSTEM AND FOR SPECIFIC APPLICATION.

B. PROTECT CONCRETE BARRIER END WITH A TYPE F END TREATMENT OR CRASH CUSHION TYPES A,B, OR D.

C. REFER TO BA 3 SERIES STD DWGS BEFORE ATTACHING CRASH CUSHION OR END TREATMENT TO CONSTANT SLOPE BARRIER. CONCRETE TRANSITION SECTION REQUIRED.

D. CREATE 10 FT CURB & GUTTER TRANSITION DETAIL FOR CHOSEN CURB & GUTTER TYPE.

DESIGN ONLY DRAWING

REVISIONS

NO.	DATE	APPR.	REMARKS

UTAH DEPARTMENT OF TRANSPORTATION
STANDARD DRAWINGS FOR ROAD AND BRIDGE CONSTRUCTION
SALT LAKE CITY, UTAH

RECOMMENDED FOR APPROVAL — JAN.01, 2017 DATE
CHAIRMAN STANDARDS COMMITTEE APPROVED — JAN.01, 2017 DATE
DEPUTY DIRECTOR

STANDARD DRAWING TITLE
CRASH CUSHION
DRAINAGE DETAILS
GUIDELINE A

STD. DWG. NO.
CC 2

DGN File:L:\Standard Drawings\Imperial\2017 Approved\1-All Drawings\CC02.dgn
28-NOV-2016

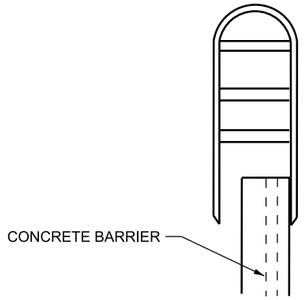

CRASH CUSHION CONNECTION

SEE NOTE C

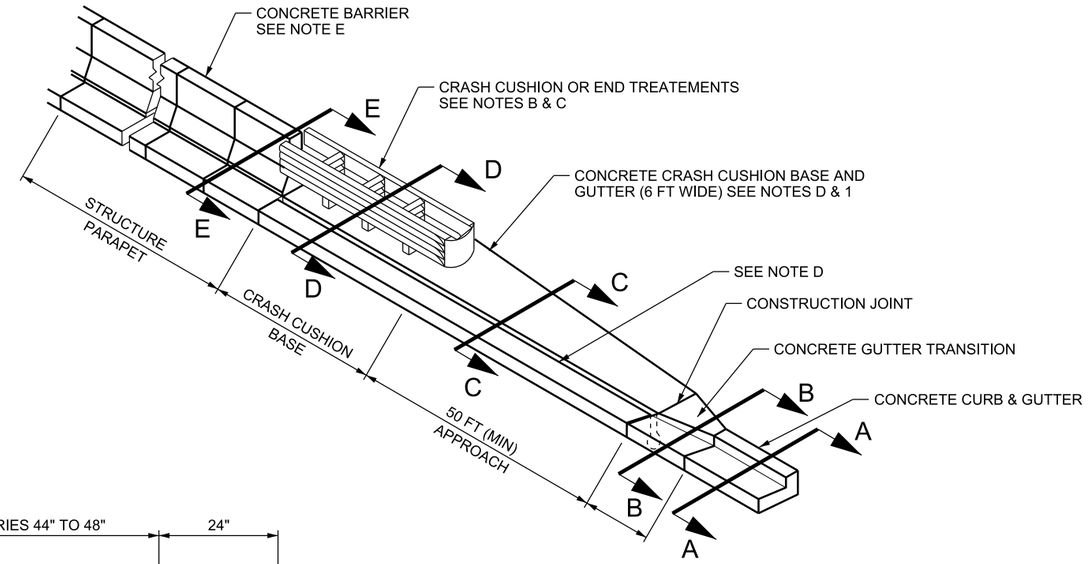

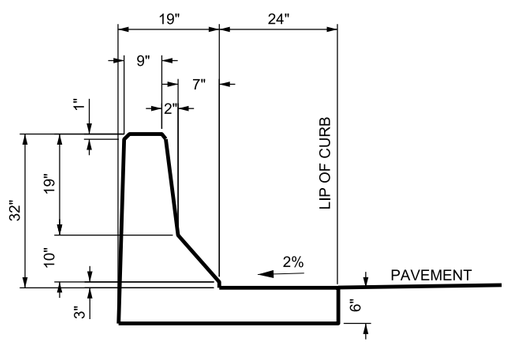

SECTION E-E

SEE NOTE E

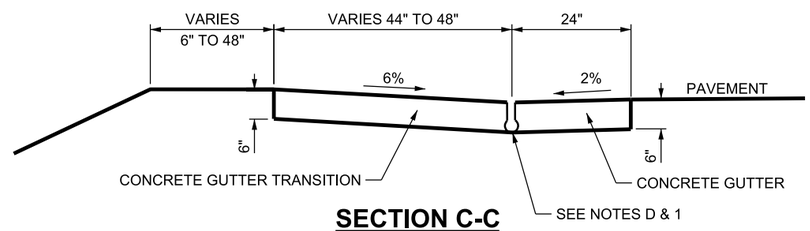

SECTION C-C

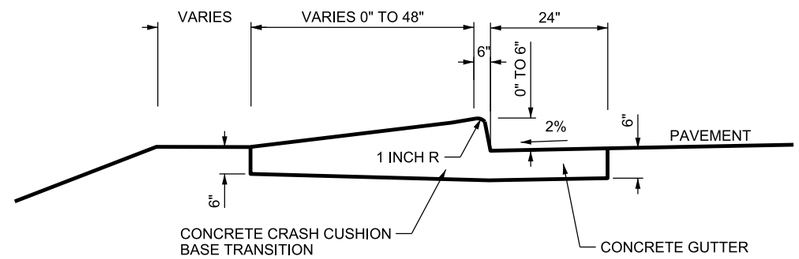

SECTION B-B

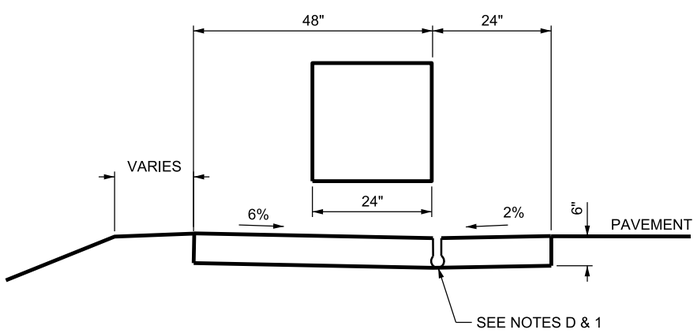

SECTION D-D

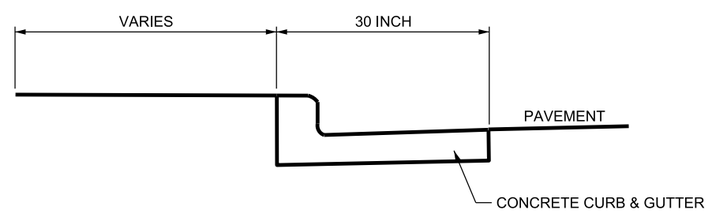

SECTION A-A

DESIGN-0NLY NOTES:

A. ALTERNATIVE INSTALLATION TO STD DWG CC 2 PLAN A2, FOR CRASH CUSHIONS OR END TREATMENTS.

B. REFER TO GUIDELINES FOR CRASH CUSHION AND BARRIER END TREATMENTS FOR APPROVED SYSTEMS AND FOR SPECIFIC APPLICATION.

C. PROTECT CONCRETE BARRIER END WITH A W-BEAM GUARDRAIL TRANSITION WITH A TYPE G OR TYPE H W-BEAM END TREATMENT OR A TYPE F END TREATMENT. PROTECT CONCRETE BARRIER END USING A CRASH CUSHION TYPE A, B, OR D WHEN THE INSTALLATION REQUIREMENTS OF A W-BEAM GUARDRAIL TRANSITION WITH A W-BEAM END TREATMENT OR TYPE F END TREATMENT CANNOT BE MET.

D. DESIGN A DRAINAGE SYSTEM THAT DOES NOT CREATE A RAISED CURB IN FRONT OF OR TO THE SIDES OF THE END TREATMENTS OR CRASH CUSHION SYSTEM WHEN PARALLEL ROAD SYSTEM IS 1 PERCENT OR GREATER. A SLOTTED DRAINAGE SYSTEM IS AN OPTION.

E. NEW JERSEY STYLE BARRIER SHOWN, ATTACH TO CONSTANT SLOPE BARRIER IN SIMILAR MANNER. USE CONSTANT SLOPE TRANSITION SECTION SEE BA 3 SERIES STD DWGS, BEFORE ATTACHING CRASH CUSHION OR END TREATMENT.

NOTES:

1. CAST, IN A MONOLITHIC POUR, CRASH CUSHION BASE AND GUTTER FROM REAR OF SYSTEM TO THE APPROACH TRANSITION WITH CURB AND GUTTER. CONSTRUCT PAD TO MEET CROSS SLOPE LISTED WITHIN THE PLAN SET. CONSTRUCT PAD NOT TO EXCEED SYSTEM MANUFACTURER'S CROSS SLOPE REQUIREMENTS IF CROSS SLOPE IS STEEPER THAN 10:1.

REVISIONS

NO.	DATE	APPR.	REMARKS

UTAH DEPARTMENT OF TRANSPORTATION
STANDARD DRAWINGS FOR ROAD AND BRIDGE CONSTRUCTION
SALT LAKE CITY, UTAH

RECOMMENDED FOR APPROVAL — JAN.01.2017 DATE
CHAIRMAN STANDARDS COMMITTEE APPROVED — JAN.01.2017 DATE
DEPUTY DIRECTOR

CRASH CUSHION AND END TREATMENTS DRAINAGE DETAILS GUIDELINE B

STANDARD DRAWING TITLE

STD. DWG. NO.
CC 3

DGN File:L:\Standard_Drawings\Imperial\2017 Approved\1-All Drawings\CC03.dgn
28-NOV-2016

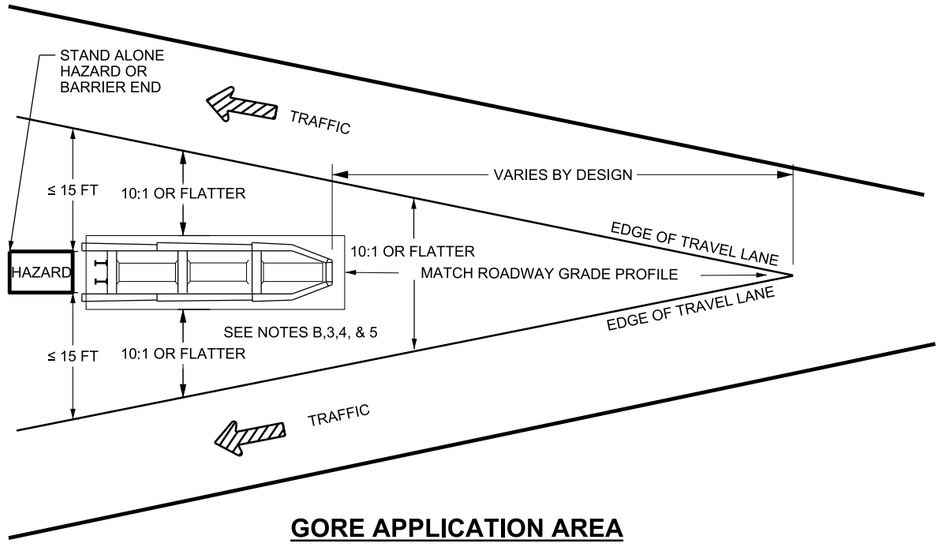

GORE APPLICATION AREA

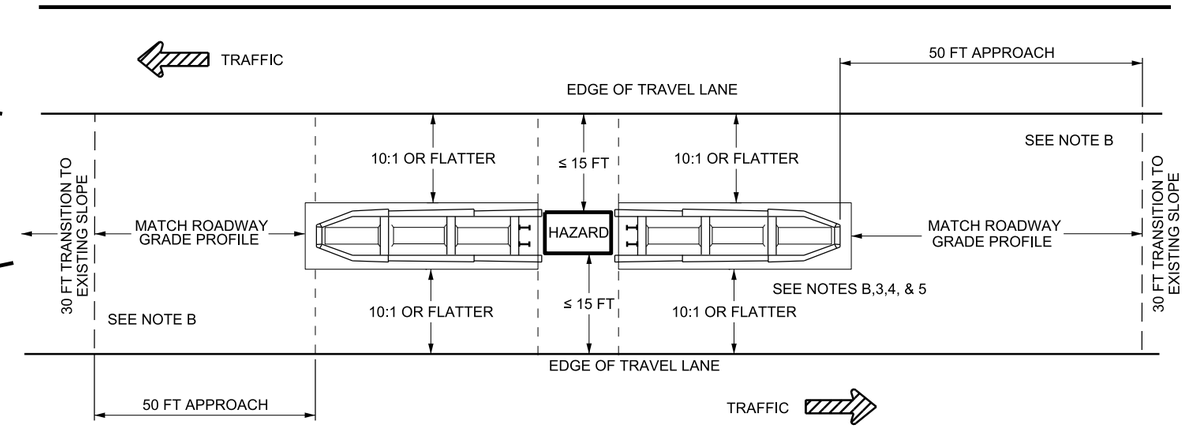

MEDIAN APPLICATION

SEE NOTE C

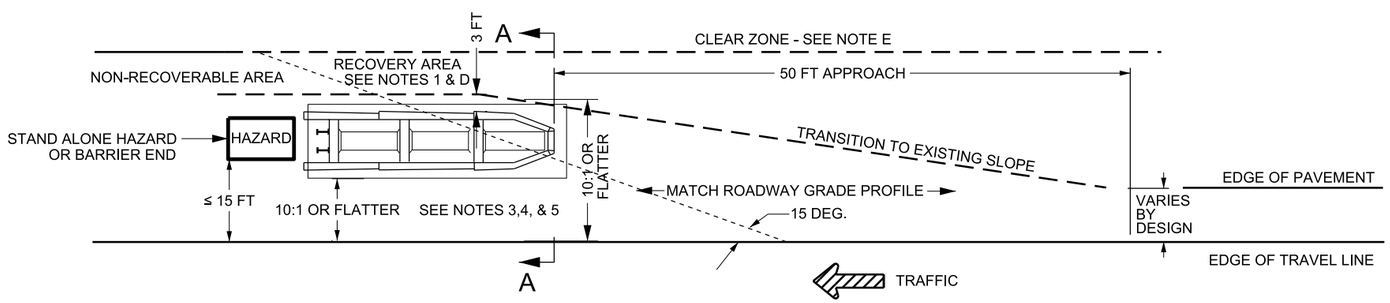

SHOULDER APPLICATION

SEE NOTE C

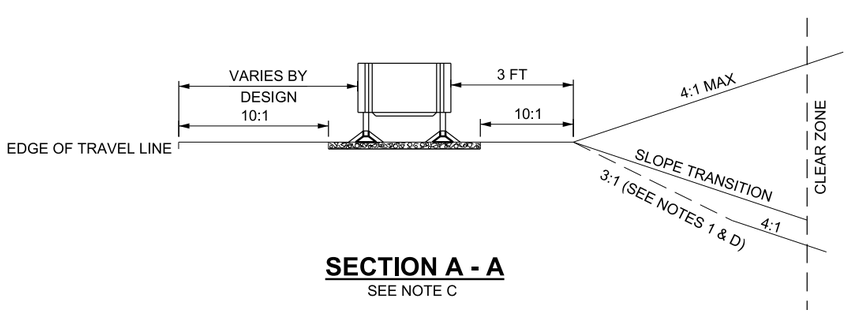

SECTION A - A

SEE NOTE C

DESIGN-ONLY NOTES:

A. REFER TO GUIDELINES FOR CRASH CUSHIONS AND BARRIER END TREATMENTS FOR APPROVED SYSTEMS AND FOR SPECIFIC APPLICATION DETAILS.
B. ALL APPLICATIONS REQUIRE THE USE OF A 10:1 SLOPE OR FLATTER TO THE FRONT AND SIDE APPROACHES. USE A 10:1 OR FLATTER SLOPE AT THE REAR OF THE SYSTEM WHEN TRAFFIC ALSO APPROACHES FROM THE REAR OF THE SYSTEM.
C. PROTECT BARRIER ENDS WITH A W-BEAM GUARDRAIL TRANSITION AND TYPE G OR TYPE H W-BEAM END TREATMENT OR TYPE F END TREATMENT AS FIRST OPTION. PROTECT CONCRETE BARRIER END USING A CRASH CUSHION TYPES A, B, OR D WHEN THE INSTALLATION REQUIREMENTS OF A W-BEAM GUARDRAIL TRANSITION AND W-BEAM END TREATMENT OR TYPE F END TREATMENT CANNOT BE MET.
D. MEET SLOPE REQUIREMENTS AS DETAILED IN APPLICABLE DD SERIES STD DWG IN RECOVERY AREA. THE ADDITIONAL INFORMATION BELOW ARE THE MINIMUM ACCEPTABLE SLOPE REQUIREMENTS IN RECOVERY AREA.
   1. RECOVERY AREA IS THE AREA BEHIND THE CRASH CUSHION AND BARRIER SYSTEM EXTENDING FROM THE APPROACH END OF CRASH CUSHION TO THE END OF THE CALCULATED LENGTH OF NEED.
   2. USE A 4:1 OR FLATTER FILL SLOPE IN RECOVERY AREA. USE A MAXIMUM 3:1 FORESLOPE AND ESTABLISH RECOVERY AREA AT BOTTOM OF 3:1 SLOPE IF IMPRACTICAL. A 4:1 OR FLATTER IN RECOVERY AREA REQUIRED WHEN USED WITH A BACKSLOPE .
E. MAINTAIN AASHTO CLEAR ZONE REQUIREMENTS.

NOTES:

1. COMPLETE SLOPE PREPARATIONS PRIOR TO INSTALLING SYSTEM.
2. USE A TRANSITION ELEMENT, ACCORDING TO MANUFACTURER'S SPECIFICATIONS, WHEN TRAFFIC APPROACHES THE REAR OF SYSTEM.
3. USE MANUFACTURER'S SPECIFICATIONS FOR PAD AND BACKUP REQUIREMENTS. A CONCRETE PAD IS REQUIRED FOR PERMANENT INSTALLATION OF TYPE A, B & D CRASH CUSHIONS.
4. CONSTRUCT PAD TO MEET CROSS SLOPE LISTED WITHIN THE PLAN SET. CONSTRUCT PAD NOT TO EXCEED SYSTEM MANUFACTURER'S CROSS SLOPE REQUIREMENTS IF CROSS SLOPE IS STEEPER THAN 10:1. GRADING WILL BE COMPLETED FLUSH TO THE TOP OF THE PAD.
5. INSTALL PROPER MARKINGS ACCORDING TO STD DWG CC 1.
6. INSTALL A CONSTANT SLOPE TRANSITION SECTION BEFORE INSTALLING CRASH CUSHION OR END TREATMENT WHEN CONSTANT SLOPE TYPE BARRIER IS INSTALLED. REFER TO BA 3 SERIES STD DWGS .

NO.	DATE	APPR.	REMARKS

REVISIONS

UTAH DEPARTMENT OF TRANSPORTATION
STANDARD DRAWINGS FOR ROAD AND BRIDGE CONSTRUCTION
SALT LAKE CITY, UTAH

RECOMMENDED FOR APPROVAL — JAN.01, 2017 DATE
CHAIRMAN STANDARDS COMMITTEE APPROVED — JAN.01, 2017 DATE
DEPUTY DIRECTOR

DETAILS FOR PLACEMENT CRASH CUSHIONS TYPE A, B, AND D

STANDARD DRAWING TITLE

STD. DWG. NO.
CC 4A

DGN File: L:\Standard Drawings\Imperial\2017 Approved\1-All Drawings\CC04A.dgn
28-NOV-2016

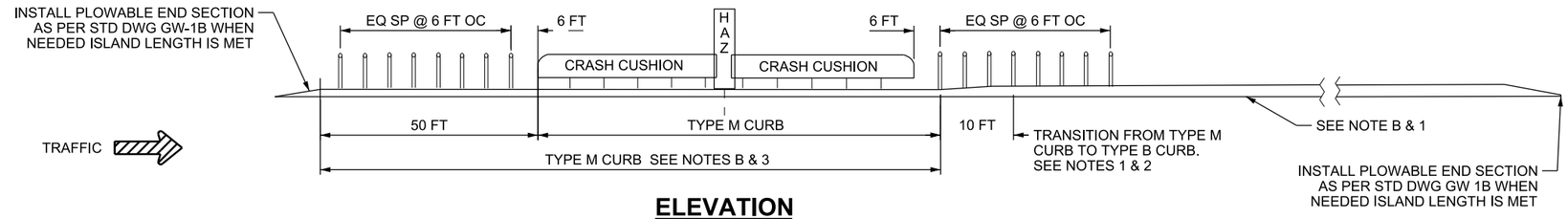

ELEVATION

ONE APPROACH SHOWN
REVERSE APPROACH SIMILAR

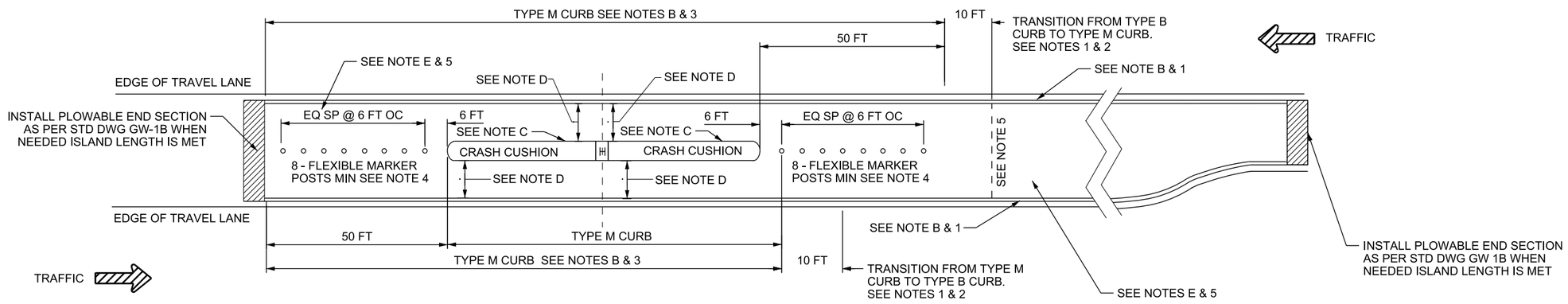

PLAN VIEW

SEE NOTE A

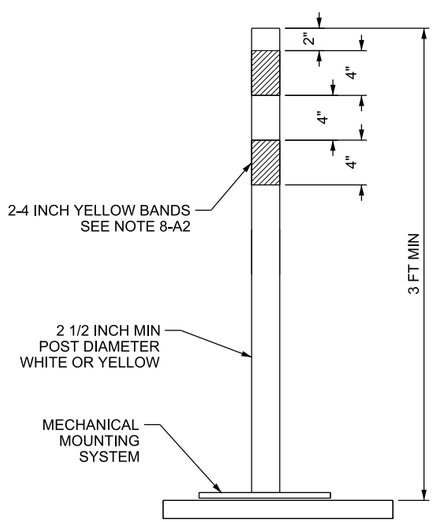

FLEXIBLE MARKER POST SURFACE MOUNTED

SEE NOTE 4

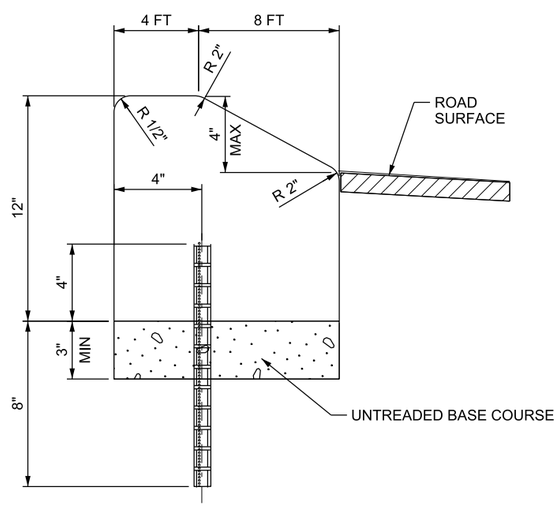

MODIFIED TYPE M1-A CURB

USE # 6 X 12 INCH LONG COATED DEFORMED BARS ON 5 FT MAX CENTERS REFER TO NOTE B

DESIGN-ONLY NOTES:

A. THIS DRAWING DEPICTS TWO DETAILS THAT ARE ACCEPTABLE FOR THE USE OF A CRASH CUSHION ON AN ISLAND APPLICATION. CONSULT PLAN SET TO DETERMINE WHICH APPLICATION TO USE.
   1. EITHER PLAN VIEW ENDS CAN BE USED FOR BOTH APPROACH DIRECTIONS.
   2. PLAN CAN BE COMBINED, AS DEPICTED, FOR APPROACH TRAFFIC.
B. CRASH CUSHION MANUFACTURERS RECOMMEND NO MORE THAN A 4 INCH CURB TO THE APPROACH OR SIDES OF A CRASH CUSHION. USE TYPE M1-A, MODIFIED M1-A, OR M2 CURB WHERE TYPE M CURB IS CALLED OUT. USE OF TYPE M CURB IS ALLOWED FOR ALL ISLAND CURBING.
C. RECOMMEND USING TYPES A, B, OR D CRASH CUSHION SYSTEMS. REFER TO THE GUIDELINES FOR CRASH CUSHIONS AND BARRIER END TREATMENTS FOR APPROVED SYSTEMS. INSTALL CRASH CUSHIONS ON CONCRETE PAD ACCORDING TO MANUFACTURER'S REQUIREMENTS.
D. MEET OFFSET REQUIREMENTS ACCORDING TO STD DWG DD 17. REFER TO LATERAL OFFSET TO OBSTRUCTION REQUIREMENTS, NOTE B.
E. EVALUATE DRAINAGE OF ISLAND SURFACE.

NOTES:

1. CONSULT PLAN SET TO DETERMINE WHICH TYPE M CURB AND TYPE B CURB TO USE. REFER TO STD DWG GW 2 OR MODIFIED TYPE M1-A DETAIL, THIS SHEET.
2. TRANSITION FROM TYPE M CURB TO TYPE B CURB WHERE SPECIFIED.
3. ISLAND LENGTH AND TYPE M CURB REQUIREMENTS CAN VARY BASED ON HAZARD LENGTH AND LENGTH OF CHOSEN CRASH CUSHION SYSTEM. MINIMUM ISLAND LENGTH IS EQUAL TO THE SUM OF HAZARD LENGTH, CRASH CUSHION LENGTH, AND THE MINIMUM 50 FT IN FRONT OF CRASH CUSHION.
4. MARKER POSTS ARE USED TO DISCOURAGE TRAFFIC FROM TRAVERSING ISLAND. USE A SURFACE MOUNTED FLEXIBLE MARKER POST AS APPROVED BY THE ENGINEER.
   A. FLEXIBLE MARKER POST:
      1. MANUFACTURED USING POLYETHYLENE OR POLYPROPYLENE WITH A YELLOW OR WHITE BODY, MINIMUM 0.110 INCH TUBE WALL THICKNESS, 36 INCH TALL.
      2. INSTALL TWO 4 INCH BANDS OF YELLOW SHEETING CONFORMING TO STANDARD SPECIFICATION 02890, ACCORDING TO FLEXIBLE MARKER POST DETAIL.
   B. USE A MECHANICAL SURFACE MOUNTING SYSTEM AND MOUNT ACCORDING TO MANUFACTURER'S REQUIREMENTS.
   C. USE A MOUNTING SYSTEM WHICH THE MARKER POST CAN BE REMOVED AND REPLACED WITHOUT DISTURBING THE MOUNTING BASE.
   D. ADDITIONAL MARKER POSTS INSTALLED AT ENGINEERS DISCRETION.
5. FILL ISLAND BETWEEN THE CURBS AND FROM THE CURB TRANSITION TO THE BACK OF THE CRASH CUSHION USING A DURABLE ALL WEATHER SURFACE (EXAMPLE: ASPHALT, CONCRETE). DO NOT PLACE LANDSCAPE MATERIAL IN FRONT OF OR TO THE SIDES OF CRASH CUSHION.

REVISIONS

NO.	DATE	APPR.	REMARKS

UTAH DEPARTMENT OF TRANSPORTATION
STANDARD DRAWINGS FOR ROAD AND BRIDGE CONSTRUCTION
SALT LAKE CITY, UTAH

RECOMMENDED FOR APPROVAL — JAN.01.2017 DATE
CHAIRMAN STANDARDS COMMITTEE APPROVED — JAN.01.2017 DATE
DEPUTY DIRECTOR

STANDARD DRAWING TITLE: CRASH CUSHION MOUNTED ON MEDIAN ISLAND

STD. DWG. NO.
CC 4B

DGN File:L:\Standard Drawings\Imperial\2017 Approved\1-All Drawings\CC04B.dgn
28-NOV-2016

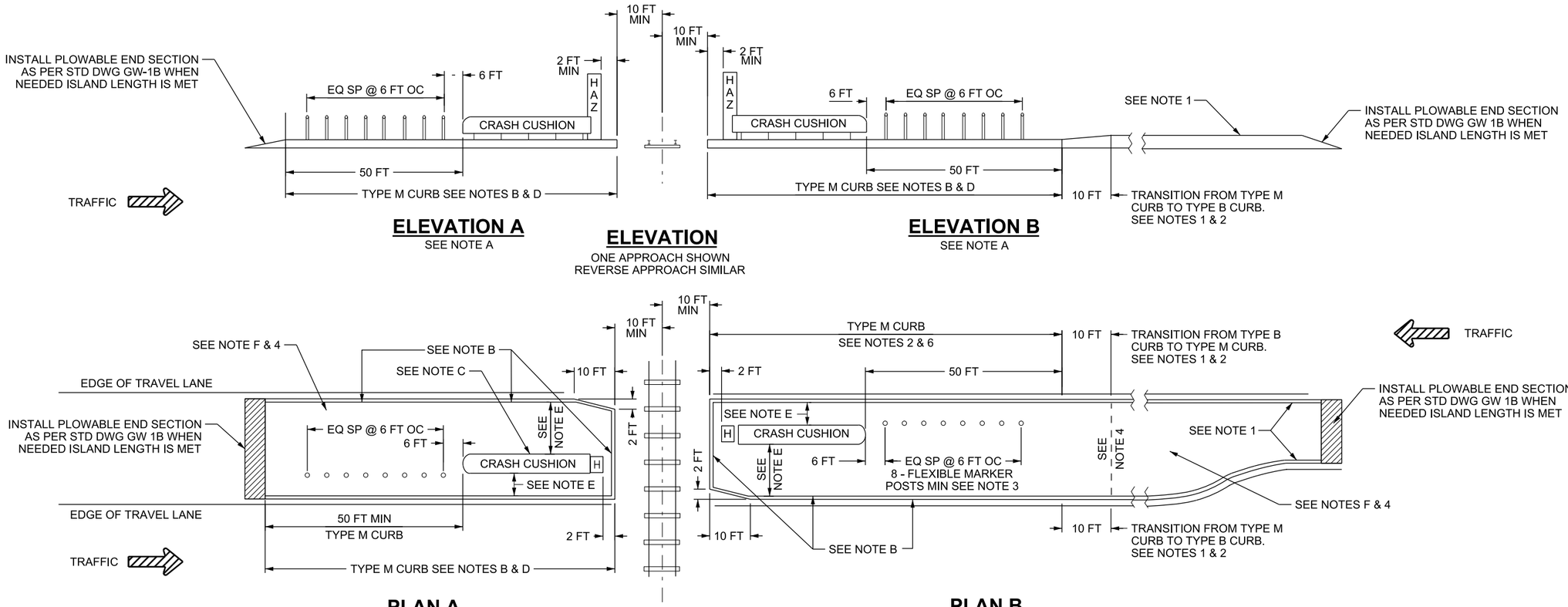

DESIGN-ONLY NOTES:

A. THIS DRAWING DEPICTS TWO DETAILS THAT ARE ACCEPTABLE FOR THE USE OF A CRASH CUSHION ON AN ISLAND APPLICATION. CONSULT PLAN SET TO DETERMINE WHICH APPLICATION TO USE.
   A. PLAN A CAN BE USED FOR BOTH APPROACH DIRECTIONS.
   B. PLAN B CAN BE USED FOR BOTH APPROACH DIRECTIONS.
   C. PLAN A AND B CAN BE COMBINED, AS DEPICTED, FOR APPROACH TRAFFIC.
B. CRASH CUSHION MANUFACTURERS RECOMMEND NO MORE THAN A 4 INCH CURB TO THE APPROACH OR SIDES OF A CRASH CUSHION. USE TYPE M1, MODIFIED M1, OR M2 CURB WHERE TYPE M CURB IS CALLED OUT. CONSULT PLAN SET TO DETERMINE WHICH M TYPE CURB TO USE. REFER TO STD DWG GW 2.
C. RECOMMEND USING TYPES A, B, OR D CRASH CUSHION SYSTEMS. REFER TO THE GUIDELINES FOR CRASH CUSHIONS AND BARRIER END TREATMENTS FOR APPROVED SYSTEMS. INSTALL CRASH CUSHIONS ON CONCRETE PAD ACCORDING TO MANUFACTURER'S REQUIREMENTS.
D. ISLAND LENGTH AND TYPE M CURB REQUIREMENTS CAN VARY BASED ON HAZARD LENGTH AND LENGTH OF CHOSEN CRASH CUSHION SYSTEM. MINIMUM ISLAND LENGTH IS EQUAL TO THE SUM OF REAR OFFSET, HAZARD LENGTH, CRASH CUSHION LENGTH, AND THE MINIMUM 50 FT IN FRONT OF CRASH CUSHION.
E. MEET OFFSET REQUIREMENTS ACCORDING TO STD DWG DD 17. REFER TO LATERAL OFFSET TO OBSTRUCTION REQUIREMENTS, NOTE B.
F. EVALUATE DRAINAGE OF ISLAND SURFACE.

NOTES:

1. CONSULT PLAN SET TO DETERMINE WHICH TYPE B CURB TO USE. REFER TO STD DWG GW 2.
2. TRANSITION FROM TYPE M CURB TO TYPE B CURB WHERE SPECIFIED.
3. MARKER POSTS ARE USED TO DISCOURAGE TRAFFIC FROM TRAVERSING ISLAND. USE A SURFACE MOUNTED FLEXIBLE MARKER POST AS APPROVED BY THE ENGINEER.
   A. FLEXIBLE MARKER POST:
      1. CONSTRUCTED USING POLYETHYLENE OR POLYPROPYLENE WITH A YELLOW OR WHITE BODY, MINIMUM 0.110 INCH TUBE WALL THICKNESS, 36 INCH TALL.
      2. INSTALL TWO 4 INCH BANDS OF YELLOW SHEETING CONFORMING TO STANDARD SPECIFICATION 02890, ACCORDING TO FLEXIBLE MARKER POST DETAIL.
   B. USE A MECHANICAL SURFACE MOUNTING SYSTEM AND MOUNT ACCORDING TO MANUFACTURER'S REQUIREMENTS.
   C. USE A MOUNTING SYSTEM WHICH THE MARKER POST CAN BE REMOVED AND REPLACED WITHOUT DISTURBING THE MOUNTING BASE.
   D. ADDITIONAL MARKER POSTS INSTALLED AT ENGINEERS DISCRETION.
4. FILL ISLAND BETWEEN THE CURBS AND FROM THE CURB TRANSITION TO THE BACK OF THE CUSHION USING A DURABLE ALL WEATHER SURFACE (EXAMPLE: ASPHALT, CONCRETE). DO NOT PLACE LANDSCAPE MATERIAL IN FRONT OF OR TO THE SIDES OF CRASH CUSHION.

REVISIONS

NO.	DATE	APPR.	REMARKS

UTAH DEPARTMENT OF TRANSPORTATION
STANDARD DRAWINGS FOR ROAD AND BRIDGE CONSTRUCTION
SALT LAKE CITY, UTAH

RECOMMENDED FOR APPROVAL — JAN.01.2017 DATE
CHAIRMAN STANDARDS COMMITTEE APPROVED — JAN.01.2017 DATE
DEPUTY DIRECTOR

CRASH CUSHION SPLIT MEDIAN ISLAND W/RR CROSSING

STANDARD DRAWING TITLE

STD. DWG. NO.
CC 4C

DGN File: L:\Standard Drawings\Imperial\2017 Approved\1-All Drawings\CC04C.dgn
28-NOV-2016

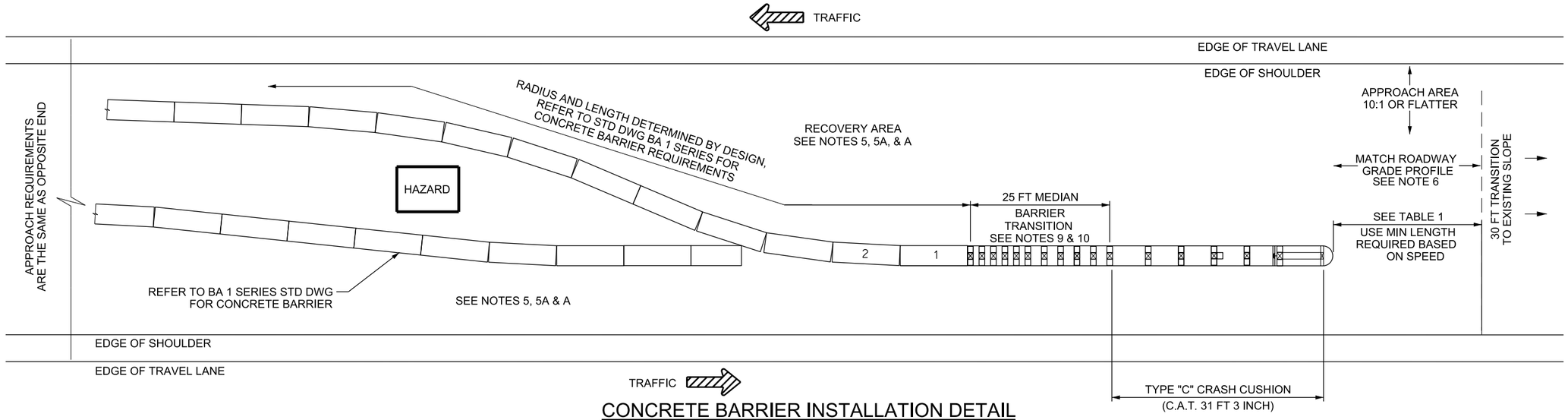

CONCRETE BARRIER INSTALLATION DETAIL

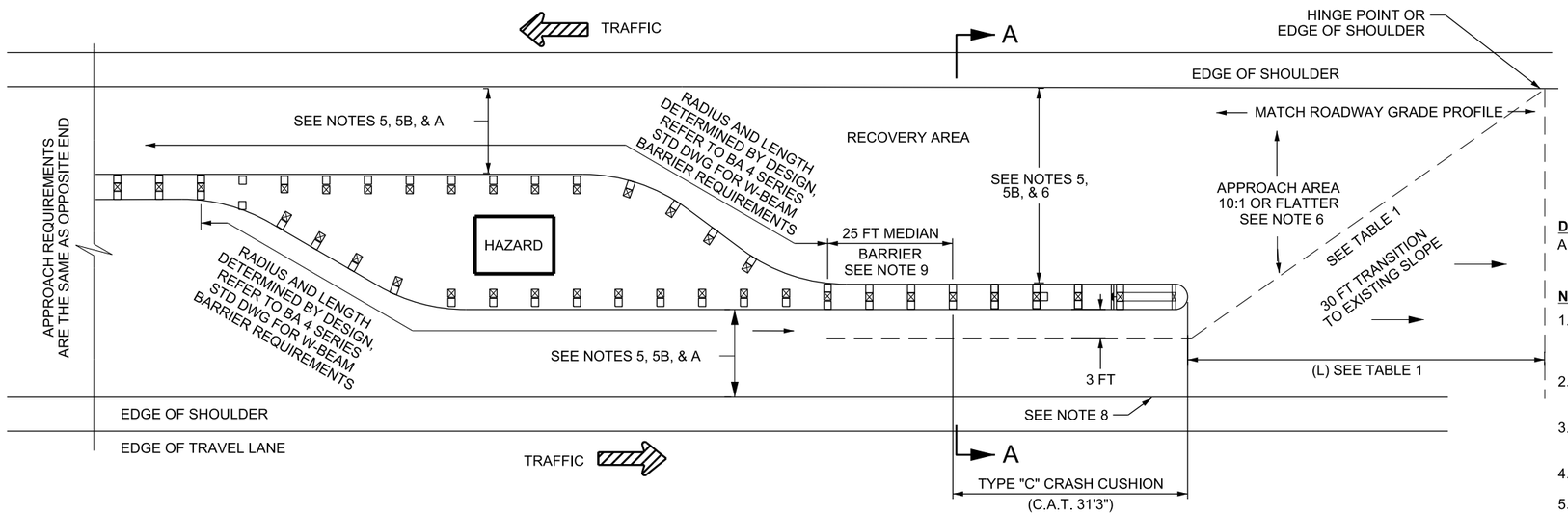

W-BEAM GUARDRAIL BARRIER INSTALLATION DETAIL

TABLE 1	
SPEED MPH	MIN LENGTH (L)
LESS THAN 40	50 FT
40 TO 55	70 FT
60 TO 80	100 FT

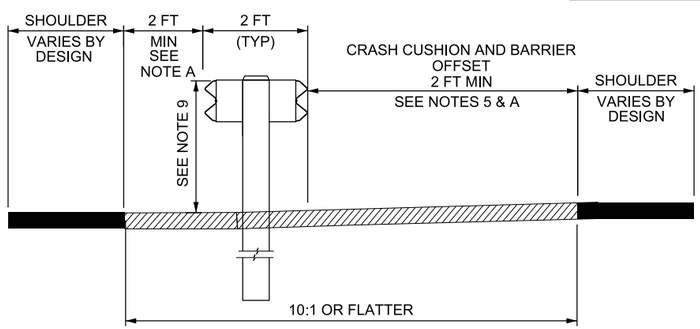

SECTION A-A

MEDIAN APPLICATION
USE WHEN SLOPES ARE 10:1 OR FLATTER ACROSS MEDIAN WIDTH

DESIGN-ONLY NOTES:

A. 2 FT MINIMUM BARRIER OFFSET IS OPTIONAL WHEN ROADWAY DESIGN REQUIRES A 12 FT OR WIDER EFFECTIVE SHOULDER.

NOTES

1. THE C.A.T., MANUFACTURED BY TRINITY INDUSTRIES. SEE GUIDELINES FOR CRASH CUSHIONS AND BARRIER END TREATMENTS FOR SPECIFIC SYSTEM DETAILS.
2. INSTALL SYSTEM ACCORDING TO MANUFACTURER'S SPECIFICATIONS.
3. HAVE SHOP DRAWING AVAILABLE ON SITE FOR REFERENCE DURING INSTALLATION.
4. USE GRADED AND COMPACTED SURFACE FOR C.A.T. SYSTEMS.
5. COMPLETE SLOPE PREPARATION PRIOR TO INSTALLING SYSTEM. MEET SLOPE REQUIREMENTS IN RECOVERY AREA AS DETAILED IN APPLICABLE DD SERIES STD DWG. THE ADDITIONAL INFORMATION LISTED BELOW IS THE MINIMUM ACCEPTABLE SLOPE REQUIREMENTS APPROACH AND RECOVERY AREAS OF THIS CRASH CUSHION SYSTEM.
   A. USE A 10:1 OR FLATTER FORESLOPE IN THE APPROACH AND RECOVER AREAS WHEN SYSTEM IS BEING USED IN CONJUNCTION WITH CONCRETE BARRIER.
   B. USE A 10:1 OR FLATTER FORESLOPE IN THE APPROACH AND RECOVER AREA WHEN SYSTEM IS BEING USED IN CONJUNCTION WITH W-BEAM GUARDRAIL.
6. CLEAR RECOVERY AND APPROACH AREAS OF ANY FIXED OBJECTS. DO NOT PLACE SIGNS OR POLES IN APPROACH AREA. SIGNS OR POLES PLACED IN THE RECOVERY AREA WILL BE BREAKAWAY AND BE A MINIMUM 10 FT FROM SYSTEM RAIL ELEMENTS.
7. INSTALL REQUIRED MARKINGS AS PER STD DWG CC 1.
8. REFER TO BA 4 SERIES STD DWGS FOR MEDIAN BARRIER TRANSITION.
9. ADJUST W-BEAM MEDIAN BARRIER OR W-BEAM MEDIAN BARRIER TRANSITION HEIGHT FROM 31 INCHES TO 28 INCHES OVER LENGTH OF 25 FT FOR ATTACHMENT TO THE C.A.T. SYSTEM.

REVISIONS

NO.	DATE	APPR.	REMARKS

UTAH DEPARTMENT OF TRANSPORTATION
STANDARD DRAWINGS FOR ROAD AND BRIDGE CONSTRUCTION
SALT LAKE CITY, UTAH

RECOMMENDED FOR APPROVAL — JAN.01, 2017 DATE
CHAIRMAN STANDARDS COMMITTEE APPROVED — JAN.01, 2017 DATE
DEPUTY DIRECTOR

GRADING AND PLACEMENT DETAILS CRASH CUSHION TYPE C C.A.T.

STANDARD DRAWING TITLE

STD. DWG. NO.
CC 5A

DGN File: L:\Standard Drawings\Imperial\2017 Approved\1-All Drawings\CC05A.dgn
28-NOV-2016

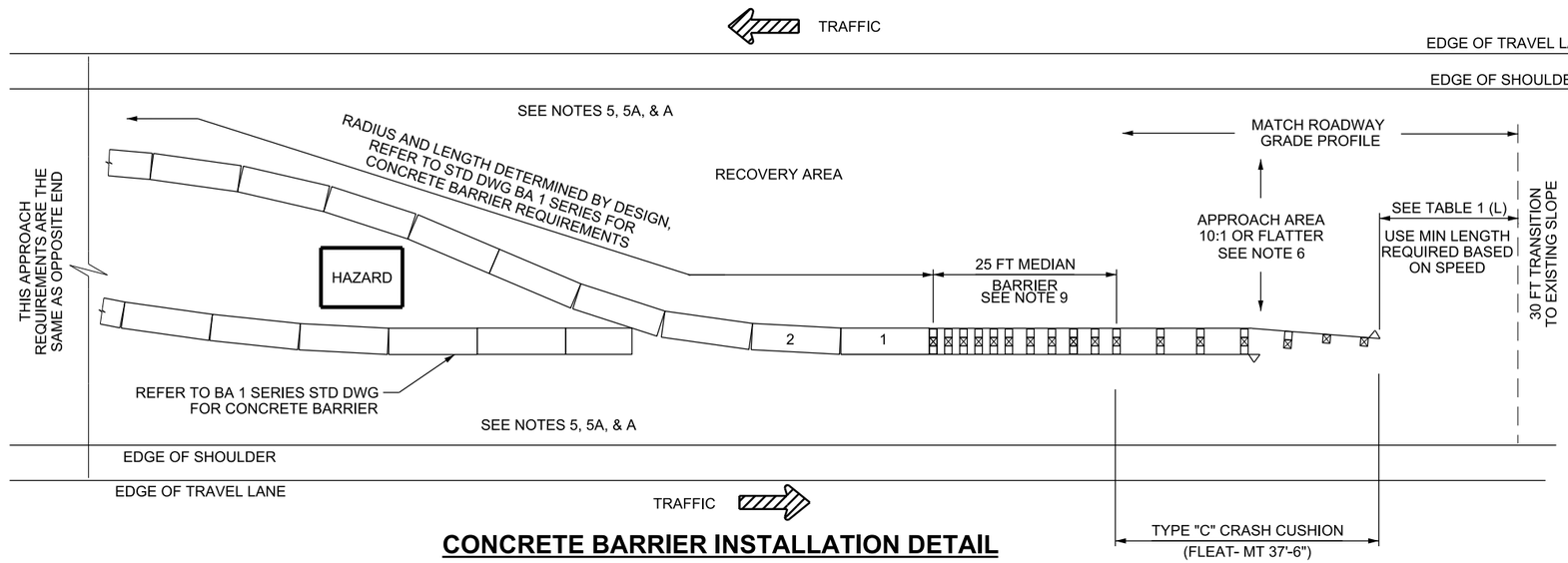

CONCRETE BARRIER INSTALLATION DETAIL

TABLE 1	
SPEED MPH	MIN LENGTH (L)
LESS THAN 40	50 FT
40 TO 55	70 FT
60 TO 80	100 FT

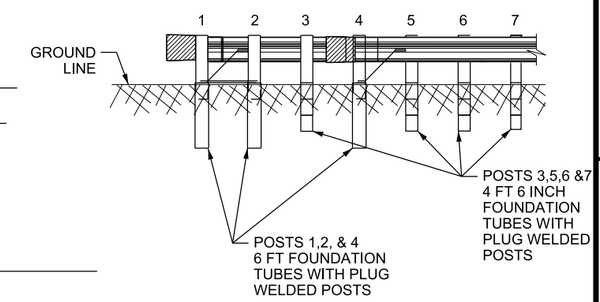

ELEVATION

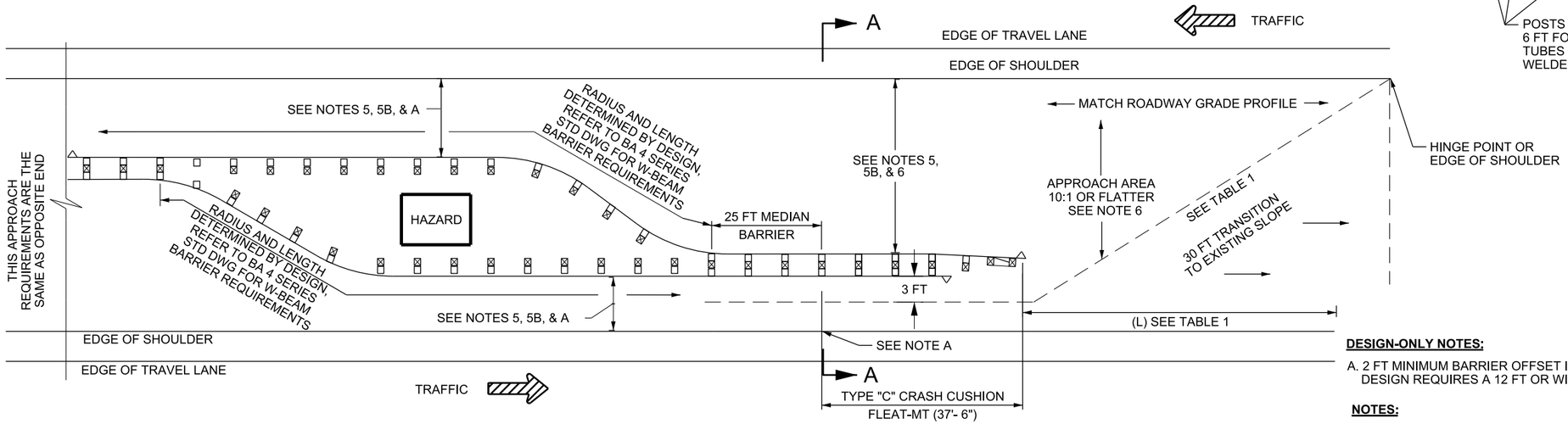

W-BEAM GUARDRAIL BARRIER INSTALLATION DETAIL

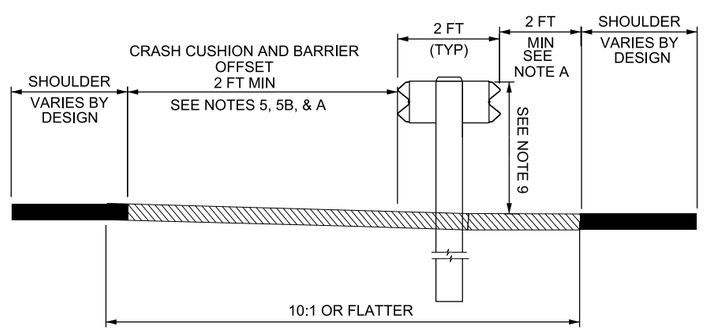

SECTION A-A

MEDIAN APPLICATION
USE WHEN SLOPES ARE 10:1 OR FLATTER ACROSS MEDIAN WIDTH

DESIGN-ONLY NOTES:

A. 2 FT MINIMUM BARRIER OFFSET IS OPTIONAL WHEN ROADWAY DESIGN REQUIRES A 12 FT OR WIDER EFFECTIVE SHOULDER.

NOTES:

1. THE FLEAT-MT, MANUFACTURED BY ROAD SYSTEMS INC., SEE GUIDELINES FOR CRASH CUCHIONS AND BARRIER END TREATMENTS FOR SPECIFIC SYSTEM DETAILS.
2. INSTALL SYSTEMS ACCORDING TO DEPARTMENTS'S AND MANUFACTURER'S SPECIFICATIONS.
3. HAVE SHOP DRAWING AVAILABLE ON SITE FOR REFERENCE DURING INSTALLATION.
4. USE GRADED AND COMPACTED SURFACE FOR FLEAT-MT SYSTEMS.
5. COMPLETE SLOPE PREPARATIONS PRIOR TO INSTALLING SYSTEM. MEET SLOPE REQUIREMENTS IN RECOVERY AREA AS DETAILED IN APPLICABLE DD SERIES STD DWG. THE ADDITIONAL INFORMATION LISTED BELOW IS THE MINIMUM ACCEPTABLE SLOPE REQUIREMENTS FOR APPROACH AND RECOVERY AREAS OF THIS CRASH CUSHION SYSTEM.
   A. USE A 10:1 OR FLATTER FORESLOPE IN THE APPROACH AND RECOVERY AREAS WHEN SYSTEM IS BEING USED IN CONJUNCTION WITH CONCRETE BARRIER.
   B. USE A 10:1 OR FLATTER FORESLOPE IN THE APPROACH AND RECOVERY AREA WHEN SYSTEM IS BEING USED IN CONJUNCTION WITH W-BEAM.
6. CLEAR RECOVERY AND APPROACH AREAS OF ANY FIXED OBJECTS. DO NOT PLACE SIGNS OR POSTS IN APPROACH AREA. SIGNS OR POSTS PLACED IN THE RECOVERY AREA WILL BE BREAKAWAY AND AND BE A MINIMUM 10 FT FROM SYSTEM RAIL ELEMENTS.
7. INSTALL REQUIRED MARKINGS ACCORDING TO STD DWG CC 1 AND THIS DRAWING.
8. REFER TO BA 4 SERIES STD DWGS FOR MEDIAN BARRIER TRANSITION.
9. ADJUST W-BEAM BARRIER OR W-BEAM MEDIAN BARRIER TRANSITION HEIGHT FROM 30 INCHES TO 28 INCHES OVER A LENGTH OF 25 FT FOR ATTACHMENT TO THE FLEAT MT SYSTEM.

REVISIONS			
NO.	DATE	APPR.	REMARKS

UTAH DEPARTMENT OF TRANSPORTATION
STANDARD DRAWINGS FOR ROAD AND BRIDGE CONSTRUCTION
SALT LAKE CITY, UTAH

RECOMMENDED FOR APPROVAL — JAN.01.2017 DATE
CHAIRMAN STANDARDS COMMITTEE APPROVED — JAN.01.2017 DATE
DEPUTY DIRECTOR

GRADING AND PLACEMENT DETAILS CRASH CUSHION TYPE C FLEAT-MT
STANDARD DRAWING TITLE

STD. DWG. NO.
CC 5B

DGN File: L:\Standard Drawings\Imperial\2017 Approved\1-All Drawings\CC05B.dgn
28-NOV-2016

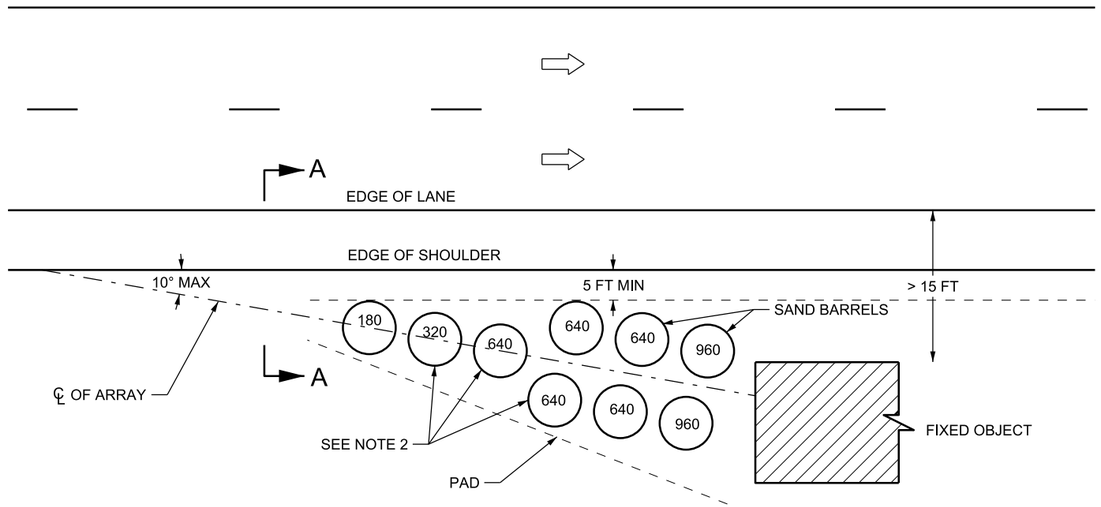

ACTUAL DESIGNS WILL BE SITE SPECIFIC

FOR ILLUSTRATION ONLY

SEE NOTE A

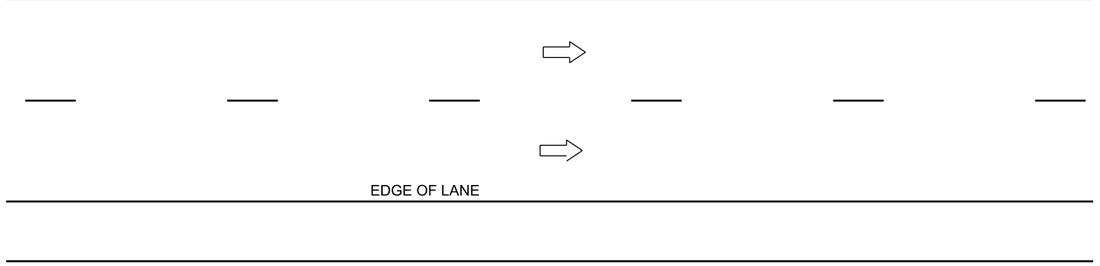

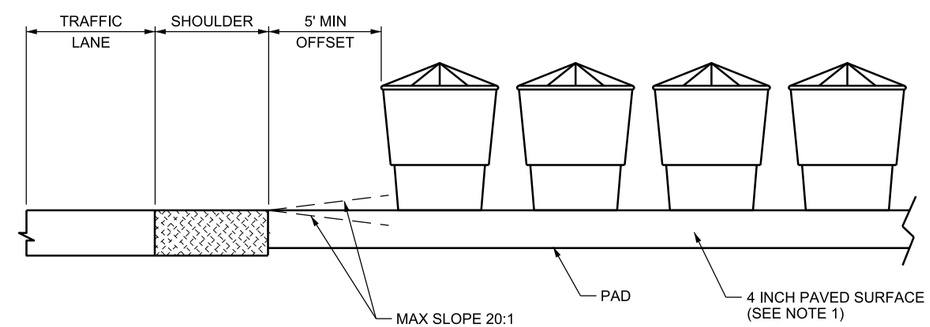

VIEW A-A

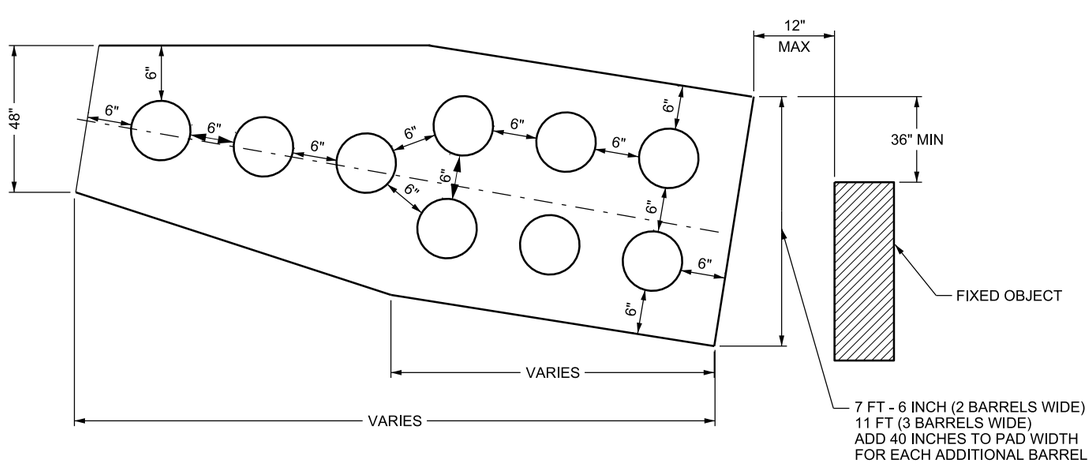

DESIGN-ONLY NOTES:

A. USE ENERGITE III SYSTEMS MANUAL TO GET REQUIRED DESIGN CRITERIA. MANUAL AVAILABLE FROM THE DIVISION OF TRAFFIC AND SAFETY.

NOTES:

1. CONSTRUCT PAD WITH HOT MIX ASPHALT OR PORTLAND CEMENT CONCRETE.
2. MARK BARREL POSITION AND THE REQUIRED SAND WEIGHT FOR EACH BARREL POSITION ON THE PAVED SURFACE. USE CONTRASTING COLOR FOR THIS MARKING.
3. INSTALL REQUIRED MARKING ACCORDING TO STD DWG CC 1.

REVISIONS

NO.	DATE	APPR.	REMARKS

UTAH DEPARTMENT OF TRANSPORTATION
STANDARD DRAWINGS FOR ROAD AND BRIDGE CONSTRUCTION
SALT LAKE CITY, UTAH

RECOMMENDED FOR APPROVAL — JAN.01.2017 DATE
CHAIRMAN STANDARDS COMMITTEE APPROVED — JAN.01.2017 DATE
DEPUTY DIRECTOR

CRASH CUSHION
TYPE E
SAND BARREL
DETAILS

STANDARD DRAWING TITLE

STD. DWG. NO.
CC 6

28-NOV-2016 DGN File:L:\Standard_Drawings\Imperial\2017 Approved\1-All Drawings\CC06.dgn

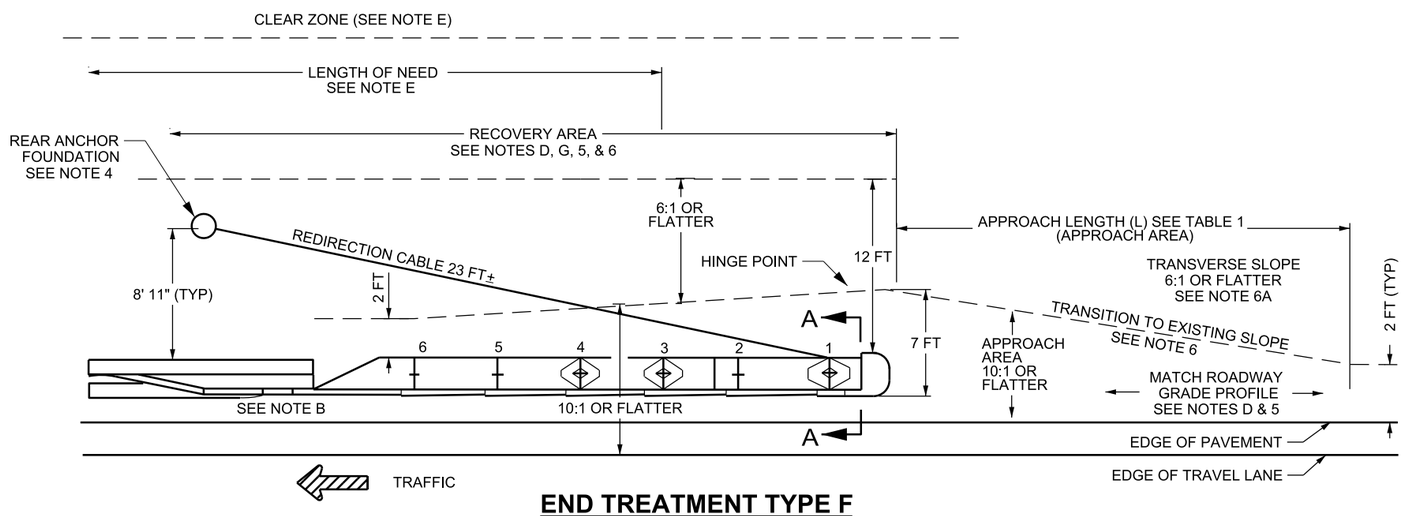

END TREATMENT TYPE F

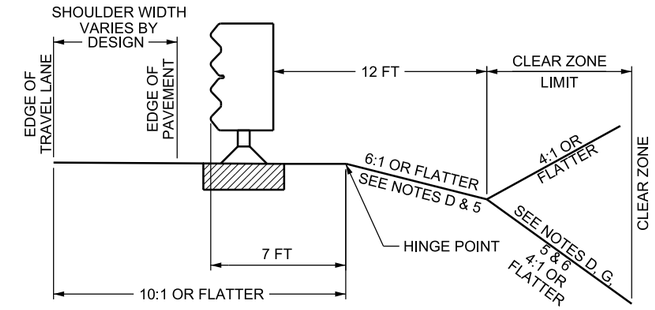

TYPICAL SECTION A-A

TABLE 1	
SPEED MPH	MIN LENGTH (L)
LESS THAN 40	50 FT
40 TO 55	70 FT
60 TO 80	100 FT

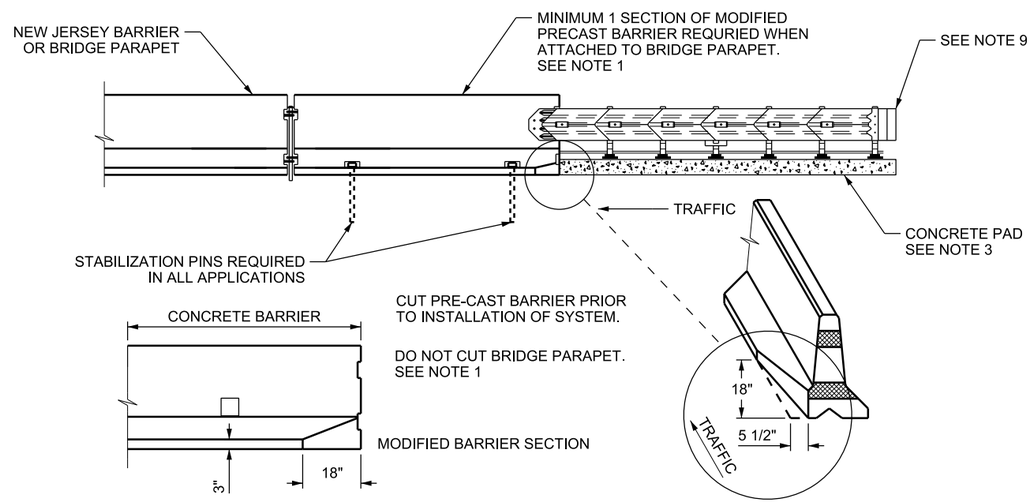

USE THIS DETAIL WHEN SYSTEM IS INSTALLED WITH NEW JERSEY SHAPED BARRIER

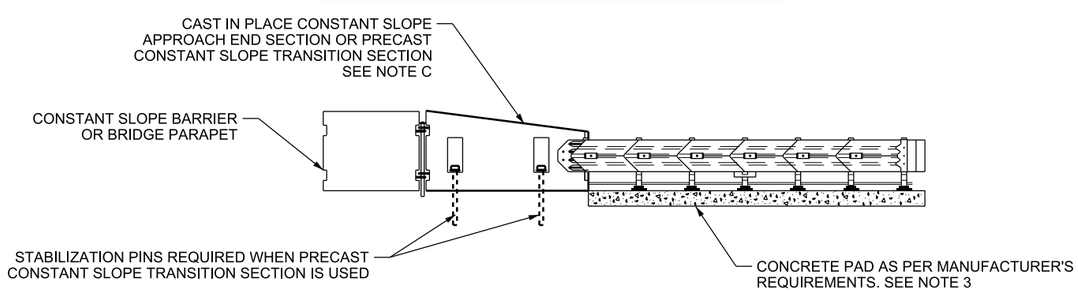

USE THIS DETAIL WHEN SYSTEM IS INSTALLED WITH CONSTANT SLOPE BARRIER

DESIGN-ONLY NOTES:

A. THE QUADTREND-350 IS MANUFACTURED BY ENERGY ABSORPTION SYSTEMS, SEE GUIDELINES FOR CRASH CUSHIONS AND BARRIER END TREATMENTS FOR SPECIFIC SYSTEM DETAILS.
B. USE SYSTEM WHEN DIRECT ATTACHMENT TO BARRIER IS REQUIRED AND THE LONGITUDINAL SPACE IN FRONT OF THE HAZARD IS EQUAL TO THE REQUIRED MINIMUM APPROACH LENGTH AS STATED IN TABLE 1. INSTALL SYSTEM ACCORDING TO MANUFACTURER'S SPECIFICATIONS.
C. REFER TO BA 3 SERIES STD DWGS BEFORE ATTACHING CRASH CUSHION OR END TREATMENT TO CONSTANT SLOPE BARRIER. CONCRETE TRANSITION SECTION REQUIRED.
D. MEET SLOPE REQUIREMENTS IN RECOVERY AREA AS DETAILED IN APPLICABLE DD SERIES STD DWGS. THE ADDITIONAL INFORMATION LISTED BELOW IS THE MINIMUM ACCEPTABLE SLOPE REQUIREMENTS FOR THE APPROACH AREA OF THE END TREATMENT AND THE RECOVERY AREA.
   1. APPROACH AREA: THE AREA PRIOR TO IMPACTING A SYSTEM.
      A) USE 10:1 OR FLATTER FORESLOPES IN APPROACH AREAS.
   2. A FORESLOPE AREA OF 12 FT x 25 FT AT 6:1 OR FLATTER REQUIRED FOR REAR ANCHOR FOUNDATION INSTALLATION
   3. RECOVERY AREA: THE AREA BEHIND THE END TREATMENT AND BARRIER SYSTEM EXTENDING FROM THE APPROACH END OF THE END TREATMENT TO THE END OF THE CALCULATED LENGTH OF NEED.
      A) USE A 4:1 OR FLATTER FORESLOPE OR BACKSLOPE IN RECOVERY AREA.
      B) USE A 3:1 FORESLOPE IN RECOVERY AREA IF IT IS IMPRACTICAL TO USE A 4:1 FORESLOPE. ESTABLISH A RECOVERY AREA AT THE TOE OF THE 3:1 FORESLOPE OF 6:1 OR FLATTER TO CLEAR ZONE LIMITS. REFER TO STD. DWG. DD17 AND AASHTO ROADSIDE DESIGN GUIDE FOR ADDITIONAL INFORMATION.
      C) USE A 4:1 OR FLATTER BACKSLOPE IN RECOVERY AREA TO THE CLEAR ZONE LIMIT, IF A 4:1 OR FLATTER BACKSLOPE CANNOT BE PROVIDED A 3:1 IS ACCEPTABLE.
   3. MATCH ROADWAY GRADE PROFILE TO THE HEAD OF THE SYSTEM INSIDE THE APPROACH AREAS.
E. REFER TO THE AASHTO ROADSIDE DESIGN GUIDE TO ESTABLISH CLEAR ZONE AND LENGTH OF NEED (LON) REQUIREMENTS. LENGTH OF NEED BEGIN AT POST 3.
F. 2 FT MINIMUM BARRIER OFFSET IS OPTIONAL WHEN ROADWAY DESIGN REQUIRES A 12 FT OR WIDER EFFECTIVE SHOULDER.
G. DO NOT PLACE SIGNS, POSTS, OR OTHER HAZARDS IN APPROACH AREA. USE BREAKAWAY SIGNS OR POSTS WHEN PLACED IN RECOVERY AREA, AND MAINTAIN A MINIMUM 10 FT CLEARANCE TO THE SIDE AND 25 FT FROM THE REAR OF THE SYSTEM. MITIGATE POTENTIAL HAZARDS IN THE RECOVERY AREA.

NOTES:

1. CUT PRE-CAST NEW JERSEY BARRIER ACCORDING TO DETAIL, PRIOR TO INSTALLATION OF SYSTEM. SEAL CUT WITH THE SAME TYPE OF SEALER USED ON BARRIER. DO NOT CUT BRIDGE PARAPET, INSTALL 1 SECTION OF MODIFIED NEW JERSEY PRECAST BARRIER, CUT ACCORDING TO DETAIL. INSTALL STABILIZATION PINS IN BARRIER SECTION. MODIFICATION TO CONSTANT SLOPE BARRIER TRANSITION NOT REQUIRED, SEE BA 3 SERIES STD DWGS. THE REQUIRED BARRIER SECTIONS AND TRANSITION SECTION ARE A SEPARATE PAY ITEM FROM THE END TREATMENT.
2. HAVE SHOP DRAWING AVAILABLE ON SITE FOR REFERENCE DURING INSTALLATION.
3. INSTALL CONCRETE PAD ACCORDING TO MANUFACTURER'S REQUIREMENTS.
4. PLACE CABLE ANCHOR FOUNDATION IN SUCH A MANNER THAT THE REDIRECTING CABLE LAYS 6:1 OR FLATTER ON TOP OF THE GROUND, AND THE FOUNDATION WITH THE CABLE ANCHOR BRACKET ATTACHED DOES NOT EXCEED 4 INCHES ABOVE GROUND LEVEL. DO NOT BURY REDIRECTION CABLE.
5. COMPLETE SLOPE PREPARATION BEFORE INSTALLING SYSTEM.
6. CONSTRUCT PLATFORM AS REQUIRED WHEN THE SPACE IS AVAILABLE EVEN IF THE PLATFORM EXTENDS BEYOND THE CLEAR ZONE REQUIREMENTS.
   A) CONSTRUCT 6:1 OR FLATTER SLOPE FOR TRANSVERSE SLOPE FROM APPROACH PAD.
7. CLEAR RECOVERY AND APPROACH AREAS OF ANY FIXED OBJECTS OR HAZARDS.
8. ATTACH SAND CONTAINERS AT POSTS 1, 3 AND 4.
9. INSTALL REQUIRED MARKING ACCORDING TO STD DWG CC 1.

NO.	DATE	APPR.	REMARKS

REVISIONS

UTAH DEPARTMENT OF TRANSPORTATION
STANDARD DRAWINGS FOR ROAD AND BRIDGE CONSTRUCTION
SALT LAKE CITY, UTAH

RECOMMENDED FOR APPROVAL — JAN.01.2017 DATE
CHAIRMAN STANDARDS COMMITTEE APPROVED — JAN.01.2017 DATE
DEPUTY DIRECTOR

GRADING AND
INSTALLATION DETAILS
END TREATMENT
TYPE F
QUAD TREND 350
STANDARD DRAWING TITLE

STD. DWG. NO.
CC 7A

DGN File: L:\Standard_Drawings\Imperial\2017 Approved\1-All Drawings\CC07A.dgn
28-NOV-2016

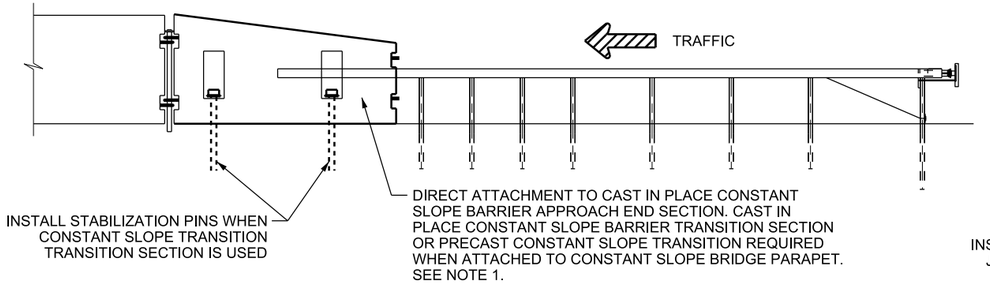

DETAIL WHEN SYSTEM IS INSTALLED WITH CONSTANT SLOPE BARRIER

(GROUND MOUNTED POST SHOWN, SURFACE MOUNTED STEEL BREAKAWAY POST ACCEPTABLE, SEE NOTE 3)

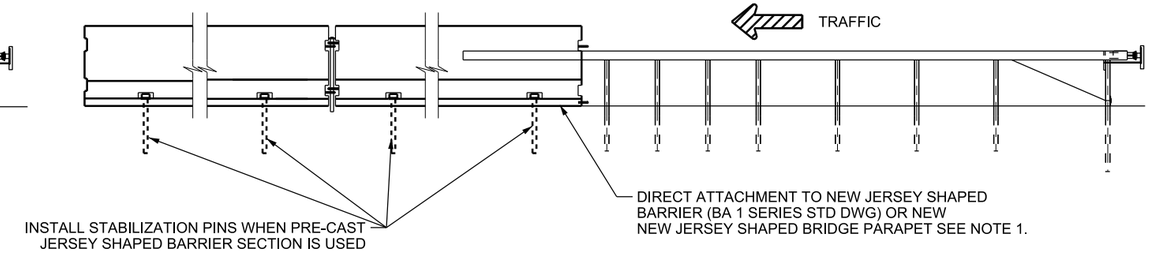

DETAIL WHEN SYSTEM IS INSTALLED WITH NEW JERSEY SHAPED BARRIER

(GROUND MOUNTED POST SHOWN, SURFACE MOUNTED STEEL BREAKAWAY POST ACCEPTABLE, SEE NOTE 3)

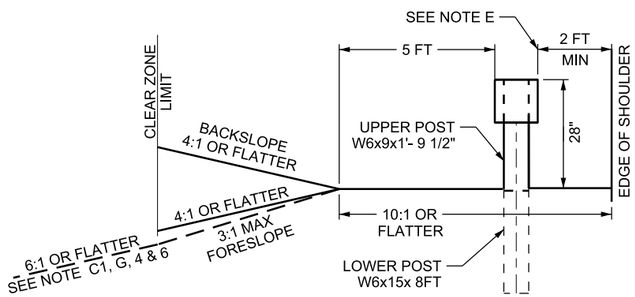

SECTION A-A

POST 1

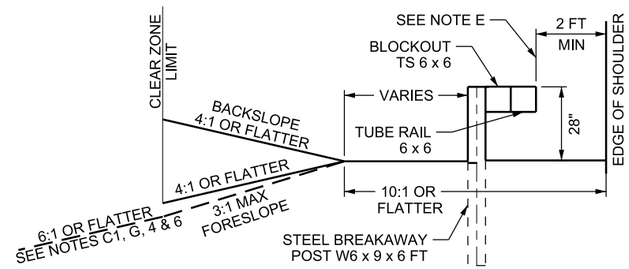

SECTION B-B

POSTS 2 TO POST 6

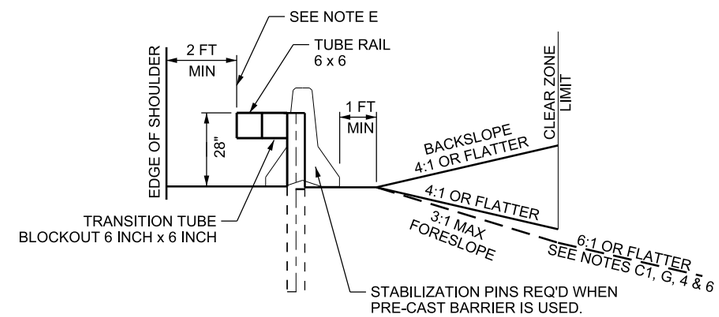

SECTION C-C

POSTS 7-8

TABLE 1	
SPEED MPH	MIN LENGTH (L)
LESS THAN 40	50 FT
40 TO 55	70 FT
60 TO 80	100 FT

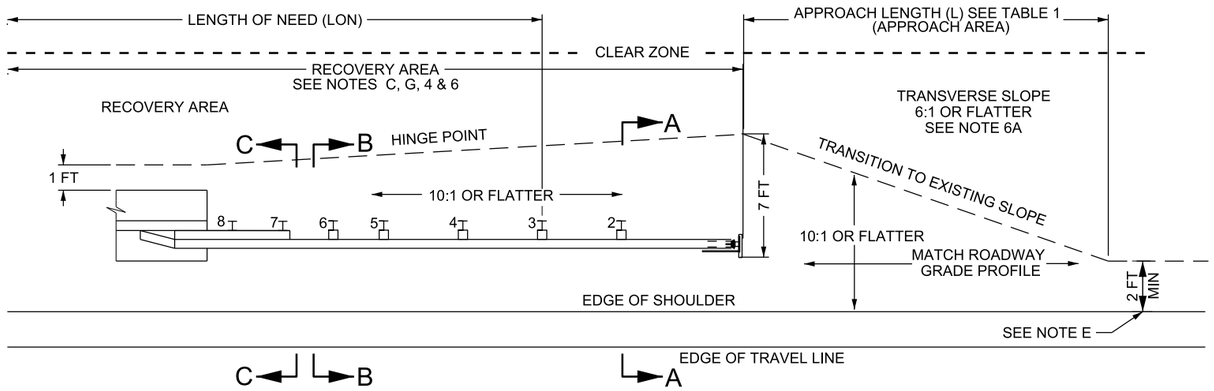

TYPE F END TREATMENT PLAN

DESIGN-ONLY NOTES:

A. THE BEAT-SSCC, MANUFACTURED BY ROAD SYSTEMS INC. SEE GUIDELINES FOR CRASH CUSHIONS & BARRIER END TREATMENTS FOR SPECIFIC SYSTEM DETAILS.
B. USE SYSTEM WHEN DIRECT ATTACHMENT TO BARRIER IS REQUIRED AND THERE IS MORE THAN 125 FT OF LONGITUDINAL SPACE IN FRONT OF THE HAZARD. INSTALL SYSTEM ACCORDING TO MANUFACTURER'S SPECIFICATIONS.
C. MEET SLOPE REQUIREMENTS IN RECOVERY AREA AS DETAILED IN APPLICABLE DD SERIES STD DWG. THE ADDITIONAL INFORMATION LISTED BELOW IS THE MINIMUM ACCEPTABLE SLOPE REQUIREMENTS FOR THE APPROACH AREA OF THE END TREATMENT AND THE RECOVERY AREA.
   1. APPROACH AREA: THE AREA PRIOR TO IMPACTING A SYSTEM.
      A) USE 10:1 OR FLATTER FORESLOPES IN APPROACH AREAS.
   2. RECOVERY AREA: THE AREA BEHIND THE END TREATMENT AND BARRIER SYSTEM EXTENDING FROM THE APPROACH END OF THE END TREATMENT TO THE END OF THE CALCULATED LENGTH OF NEED.
      A) USE A 4:1 OR FLATTER FORESLOPE OR BACKSLOPE IN RECOVERY AREA.
      B) USE A 3:1 FORESLOPE IN RECOVERY AREA IF IT IS IMPRACTICAL TO USE A 4:1 FORESLOPE. ESTABLISH A RECOVERY AREA AT THE TOE OF THE 3:1 FORESLOPE OF 6:1 OR FLATTER TO CLEAR ZONE LIMITS. REFER TO STD DWG DD17 AND AASHTO ROADSIDE DESIGN GUIDE FOR ADDITIONAL INFORMATION.
      C) USE A 4:1 OR FLATTER BACKSLOPE IN RECOVERY AREA TO THE CLEAR ZONE LIMIT, IF A 4:1 OR FLATTER BACKSLOPE CANNOT BE PROVIDED A 3:1 IS ACCEPTABLE.
   3. MATCH ROADWAY GRADE PROFILE TO THE HEAD OF THE SYSTEM INSIDE THE APPROACH AREAS.
D. REFER TO THE AASHTO ROADSIDE DESIGN GUIDE TO DETERMINE LENGTH OF NEED (LON) AND CLEAR ZONE REQUIREMENTS.
E. 2 FT MINIMUM BARRIER OFFSET IS OPTIONAL WHEN ROADWAY DESIGN REQUIRES A 12 FT OR WIDER EFFECTIVE SHOULDER.
F. DO NOT PLACE SIGNS, POSTS, OR OTHER HAZARDS IN APPROACH AREA. USE BREAKAWAY SIGNS OR POSTS WHEN PLACED IN RECOVERY AREA, AND MAINTAIN A MINIMUM 10 FT CLEARANCE TO THE SIDE AND 25 FT FROM THE REAR OF THE SYSTEM. MITIGATE POTENTIAL HAZARDS IN THE RECOVERY AREA.

NOTES:

1. ATTACH SYSTEM TRANSITION TO BARRIER OR BRIDGE PARAPET ACCORDING TO MANUFACTURER'S REQUIREMENTS. MODIFICATION NOT REQUIRED FOR NEW JERSEY STYLE BARRIERS OR PARAPETS. REFER TO BA 3 SERIES STD DWGS BEFORE ATTACHING CRASH CUSHION OR END TREATMENT TO CONSTANT SLOPE BARRIER. CONCRETE TRANSITION SECTION REQUIRED.
2. HAVE SHOP DRAWING AVAILABLE ON SITE FOR REFERENCE DURING INSTALLATION.
3. THE BEAT-SSCC REQUIRES A GRADED AND COMPACTED SURFACE WHEN GROUND MOUNTED POSTS ARE USED. SURFACE MOUNTED POST OPTIONAL, USE MANUFACTURER'S SPECIFICATIONS FOR CONCRETE PAD, POSTS AND MOUNTING HARDWARE.
4. COMPLETE SLOPE PREPARATION PRIOR TO INSTALLING SYSTEM.
5. CLEAR RECOVERY AND APPROACH AREAS OF ANY FIXED OBJECTS OR HAZARDS.
6. CONSTRUCT PLATFORM AS REQUIRED WHEN THE SPACE IS AVAILABLE EVEN IF THE PLATFORM EXTENDS BEYOND THE CLEAR ZONE REQUIREMENTS.
   A) CONSTRUCT 6:1 OR FLATTER SLOPE FOR TRANSVERSE SLOPE FROM APPROACH PAD.
7. INSTALL REQUIRED MARKERS ACCORDING TO STD DWG CC 1, TYPE F.

NO.	DATE	APPR.	REMARKS

REVISIONS

UTAH DEPARTMENT OF TRANSPORTATION
STANDARD DRAWINGS FOR ROAD AND BRIDGE CONSTRUCTION
SALT LAKE CITY, UTAH

RECOMMENDED FOR APPROVAL — JAN.01, 2017 DATE
CHAIRMAN STANDARDS COMMITTEE APPROVED — JAN.01, 2017 DATE
DEPUTY DIRECTOR

GRADING AND INSTALLATION DETAILS END TREATMENT TYPE F BEAT-SSCC

STANDARD DRAWING TITLE

STD. DWG. NO.
CC 7B

DGN File:L:\Standard Drawings\Imperial\2017 Approved\1-All Drawings\CC07B.dgn
28-NOV-2016

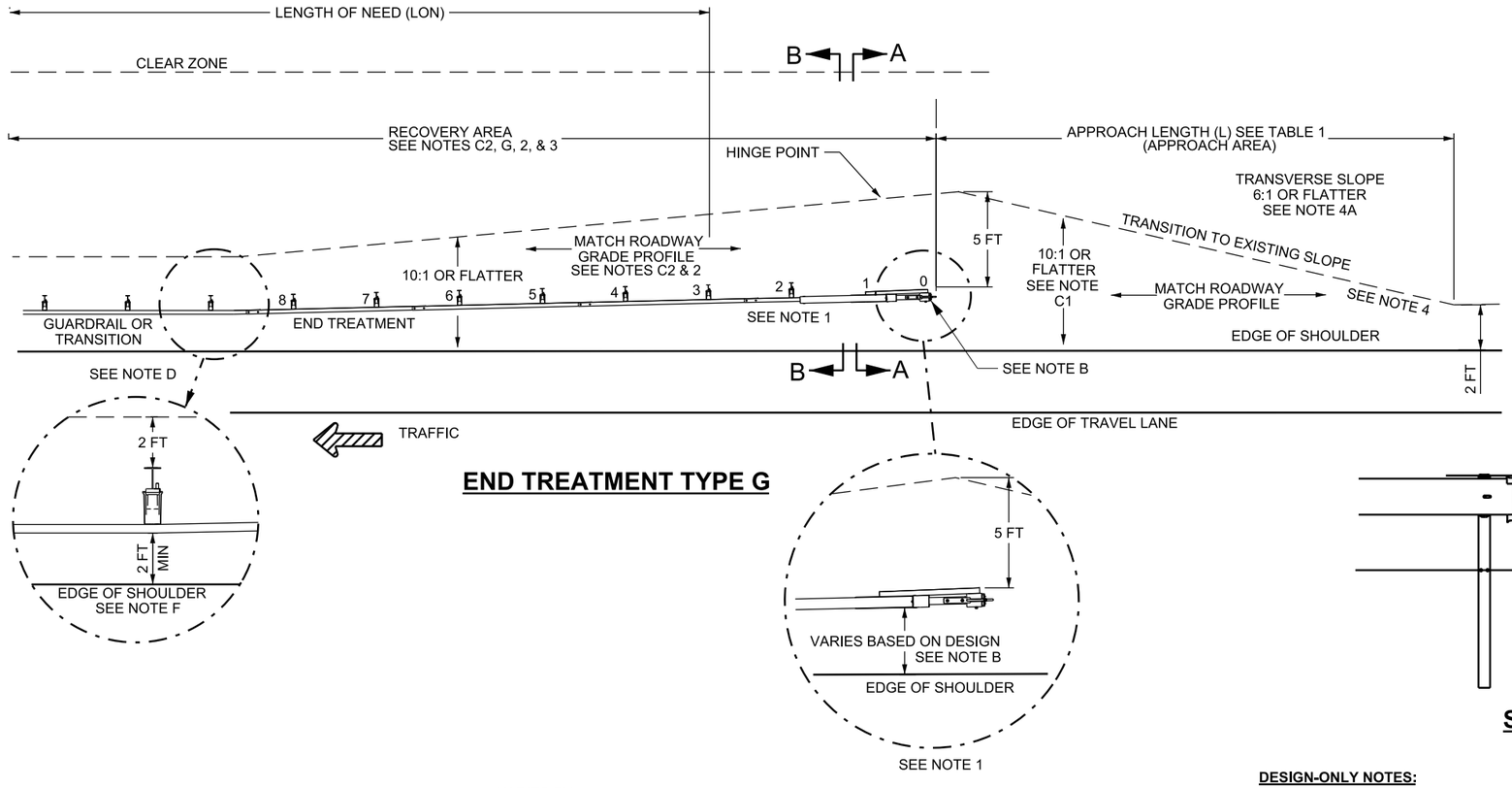

END TREATMENT TYPE G

TABLE 1	
SPEED MPH	MIN LENGTH (L)
LESS THAN 40	50 FT
40 TO 55	70 FT
60 TO 80	100 FT

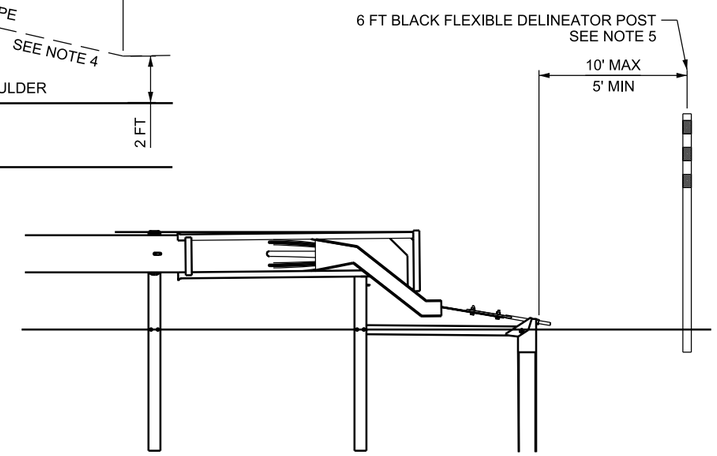

SYSTEM DELINEATION

SEE NOTE 5

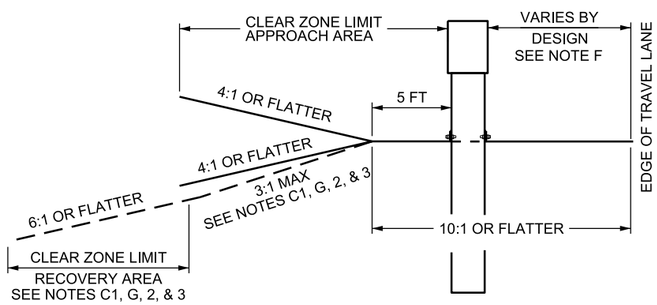

TYPICAL SECTION A-A

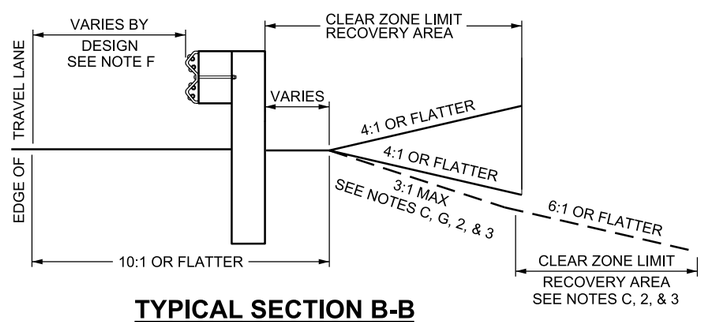

TYPICAL SECTION B-B

DESIGN-ONLY NOTES:

A. APPROVED SYSTEM: SOFTSTOP MANUFACTURED BY TRINITY INDUSTRIES . REFER TO UDOT GUIDELINES FOR CRASH CUSHIONS AND BARRIER END TREATMENTS FOR SPECIFIC SYSTEM DETAILS.
B. SYSTEM OFFSET:
1. INSTALL SYSTEM WITH 2 FT OFFSET (25:1 FLARE RATE). SYSTEM TO BE INSTALLED WITH TANGENT BARRIER.
2. SEE MANUFACTURER'S INSTALLATION MANUAL WHEN DESIGNING FOR A CONVEX OR CONCAVE CURVE.
C. MEET SLOPE REQUIREMENTS IN RECOVERY AREA AS DETAILED IN APPLICABLE DD SERIES STD DWGS. THE ADDITIONAL INFORMATION LISTED BELOW IS THE MINIMUM ACCEPTABLE SLOPE REQUIREMENTS FOR THE APPROACH AREA OF THE END TREATMENT AND THE RECOVERY AREA.
1. APPROACH AREA: THE AREA PRIOR TO IMPACTING A SYSTEM.
A) USE 10:1 OR FLATTER FORESLOPES IN APPROACH AREAS.
2. RECOVERY AREA: THE AREA BEHIND THE END TREATMENT AND BARRIER SYSTEM EXTENDING FROM THE APPROACH END OF THE END TREATMENT TO THE END OF THE CALCULATED LENGTH OF NEED.
A) USE A 4:1 OR FLATTER FORESLOPE OR BACKSLOPE IN RECOVERY AREA.
B) USE A 3:1 FORESLOPE IN RECOVERY AREA IF IT IS IMPRACTICAL TO USE A 4:1 FORESLOPE. ESTABLISH A RECOVERY AREA AT THE TOE OF THE 3:1 FORESLOPE OF 6:1 OR FLATTER TO CLEAR ZONE LIMITS. REFER TO STD DWG DD17 AND AASHTO ROADSIDE DESIGN GUIDE FOR ADDITIONAL INFORMATION.
C) USE A 4:1 OR FLATTER BACKSLOPE IN RECOVERY AREA TO THE CLEAR ZONE LIMIT, IF A 4:1 OR FLATTER BACKSLOPE CANNOT BE PROVIDED A 3:1 IS ACCEPTABLE.
3. MATCH ROADWAY GRADE PROFILE TO THE HEAD OF THE SYSTEM INSIDE THE APPROACH AREAS.
D. USE GUARDRAIL TRANSITION, BA 4 SERIES STD DWGS, WHEN ATTACHING SYSTEM TO CONCRETE BARRIER OR BRIDGE PARAPET.
E. USE THE AASHTO ROADSIDE DESIGN GUIDE TO ESTABLISH CLEAR ZONE REQUIREMENTS AND LENGTH OF NEED (LON) REQUIREMENTS.
F. 2 FT MINIMUM BARRIER OFFSET IS OPTIONAL WHEN ROADWAY DESIGN REQUIRES A 12 FT OR WIDER EFFECTIVE SHOULDER.
G. DO NOT PLACE SIGNS, POSTS, OR OTHER HAZARDS IN APPROACH AREA. USE BREAKAWAY SIGNS OR POSTS WHEN PLACED IN RECOVERY AREA, AND MAINTAIN A MINIMUM 10 FT CLEARANCE TO THE SIDE AND 25 FT FROM THE REAR OF THE SYSTEM. MITIGATE POTENTIAL HAZARDS IN THE RECOVERY AREA.

NOTES:

1. REFER TO MANUFACTURER'S SPECIFICATIONS FOR POST, RAIL ELEMENT, AND POST TO RAIL CONNECTION REQUIREMENTS. HAVE SHOP DRAWING AVAILABLE ON SITE FOR REFERENCE DURING INSTALLATION
2. COMPLETE SLOPE PREPARATION PRIOR TO INSTALLING SYSTEM.
3. CLEAR RECOVERY AND APPROACH AREAS OF ANY FIXED OBJECTS OR HAZARDS.
4. CONSTRUCT PLATFORM AS REQUIRED WHEN THE SPACE IS AVAILABLE EVEN IF THE PLATFORM EXTENDS BEYOND THE CLEAR ZONE REQUIREMENTS. SEE STD DWG CC 8C FOR EXCEPTIONS.
A) CONSTRUCT 6:1 OR FLATTER SLOPE FOR TRANSVERSE SLOPE FROM APPROACH PAD.
5. DO NOT MOUNT OBJECT MARKER ON THE SOFTSTOP SYSTEM.
A) INSTALL A 6 FT BLACK FLEXIBLE MARKER POST ACCORDING TO SYSTEM DELINEATION DETAIL. PLACE YELLOW BANDS OF REFLECTIVE SHEETING AS SPECIFIED BY STANDARD SPECIFICATION, PART 2 AT THE TOP OF THE POST WITH A 2 INCH SPACE BETWEEN THE 1ST AND 2ND BAND AND THE 2ND AND 3RD BAND.

REVISIONS

NO.	DATE	APPR.	REMARKS

UTAH DEPARTMENT OF TRANSPORTATION
STANDARD DRAWINGS FOR ROAD AND BRIDGE CONSTRUCTION
SALT LAKE CITY, UTAH

RECOMMENDED FOR APPROVAL — JAN.01.2017 DATE
CHAIRMAN STANDARDS COMMITTEE APPROVED — JAN.01.2017 DATE
DEPUTY DIRECTOR — DATE

STANDARD DRAWING TITLE
GRADING AND INSTALLATION DETAILS SOFTSTOP END TREATMENT TYPE G (MASH)

STD. DWG. NO.
CC 8A

DGN File:L:\Standard Drawings\Imperial\2017 Approved\1-All Drawings\CC08A.dgn
28-NOV-2016

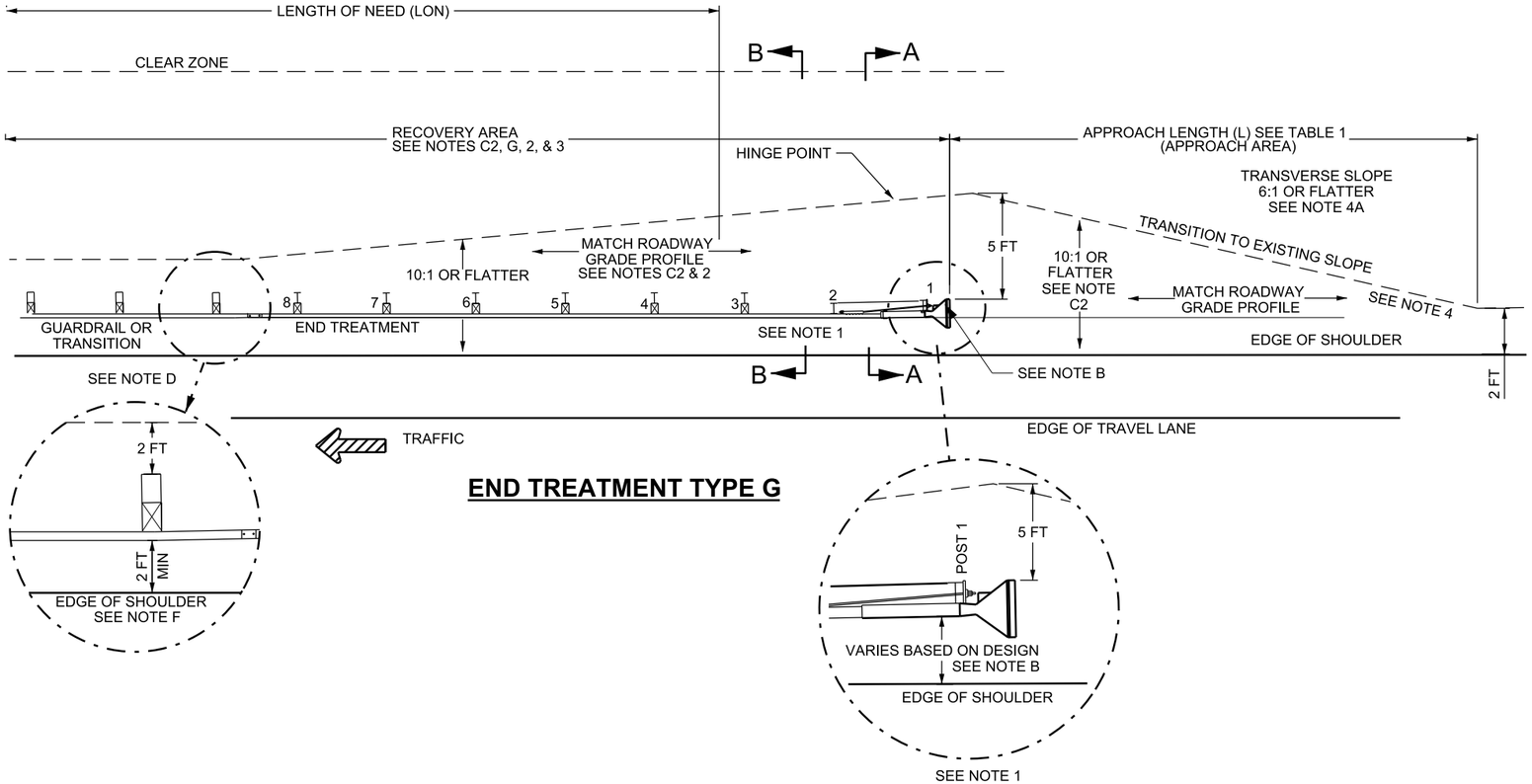

END TREATMENT TYPE G

TABLE 1	
SPEED MPH	MIN LENGTH (L)
LESS THAN 40	50 FT
40 TO 55	70 FT
60 TO 80	100 FT

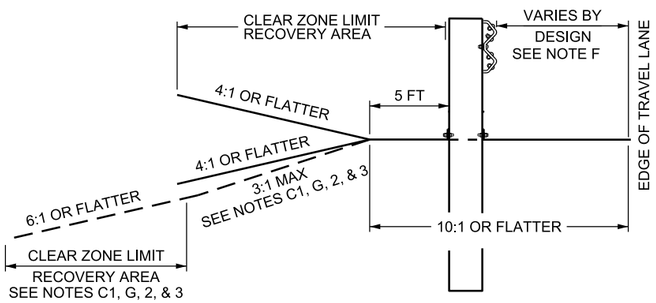

TYPICAL SECTION A-A

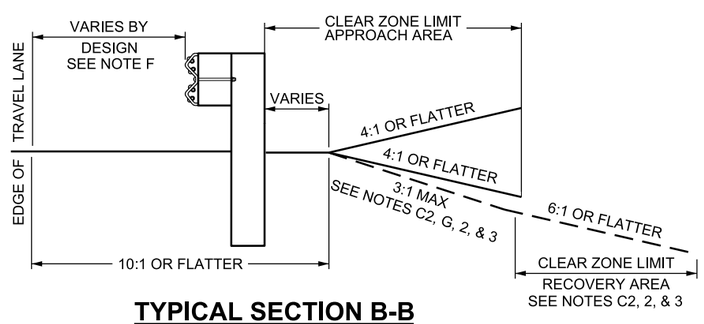

TYPICAL SECTION B-B

DESIGN-ONLY NOTES:

A. APPROVED SYSTEM: MSKT-SP-MGS MANUFACTURED BY ROAD SYSTEMS, INC. REFER TO UDOT GUIDELINES FOR CRASH CUSHIONS AND BARRIER END TREATMENTS FOR SPECIFIC SYSTEM DETAILS.
B. SYSTEM OFFSET:
   1. INSTALL SYSTEM WITH NO OFFSET. SYSTEM TO BE INSTALLED WITH TANGENT BARRIER.
C. MEET SLOPE REQUIREMENTS IN RECOVERY AREA AS DETAILED IN APPLICABLE DD SERIES STD DWGS. THE ADDITIONAL INFORMATION LISTED BELOW IS THE MINIMUM ACCEPTABLE SLOPE REQUIREMENTS FOR THE APPROACH AREA OF THE END TREATMENT AND THE RECOVERY AREA.
   1. APPROACH AREA: THE AREA PRIOR TO IMPACTING A SYSTEM.
      A) USE 10:1 OR FLATTER FORESLOPES IN APPROACH AREAS.
   2. RECOVERY AREA: THE AREA BEHIND THE END TREATMENT AND BARRIER SYSTEM EXTENDING FROM THE APPROACH END OF THE END TREATMENT TO THE END OF THE CALCULATED LENGTH OF NEED.
      A) USE A 4:1 OR FLATTER FORESLOPE OR BACKSLOPE IN RECOVERY AREA.
      B) USE A 3:1 FORESLOPE IN RECOVERY AREA IF IT IS IMPRACTICAL TO USE A 4:1 FORESLOPE. ESTABLISH A RECOVERY AREA AT THE TOE OF THE 3:1 FORESLOPE OF 6:1 OR FLATTER TO CLEAR ZONE LIMITS. REFER TO STD DWG DD17 AND AASHTO ROADSIDE DESIGN GUIDE FOR ADDITIONAL INFORMATION.
      C) USE A 4:1 OR FLATTER BACKSLOPE IN RECOVERY AREA TO THE CLEAR ZONE LIMIT, IF A 4:1 OR FLATTER BACKSLOPE CANNOT BE PROVIDED A 3:1 IS ACCEPTABLE.
   3. MATCH ROADWAY GRADE PROFILE TO THE HEAD OF THE SYSTEM INSIDE THE APPROACH AREAS.
D. USE GUARDRAIL TRANSITION, BA 4 SERIES STD DWGS, WHEN ATTACHING SYSTEM TO CONCRETE BARRIER OR BRIDGE PARAPET.
E. USE THE AASHTO ROADSIDE DESIGN GUIDE TO ESTABLISH CLEAR ZONE REQUIREMENTS AND LENGTH OF NEED (LON) REQUIREMENTS.
F. 2 FT MINIMUM BARRIER OFFSET IS OPTIONAL WHEN ROADWAY DESIGN REQUIRES A 12 FT OR WIDER EFFECTIVE SHOULDER.
G. DO NOT PLACE SIGNS, POSTS, OR OTHER HAZARDS IN APPROACH AREA. USE BREAKAWAY SIGNS OR POSTS WHEN PLACED IN RECOVERY AREA, AND MAINTAIN A MINIMUM 10 FT CLEARANCE TO THE SIDE AND 25 FT FROM THE REAR OF THE SYSTEM. MITIGATE POTENTIAL HAZARDS IN THE RECOVERY AREA.

NOTES:

1. REFER TO MANUFACTURER'S SPECIFICATIONS FOR POST, RAIL ELEMENT, AND POST TO RAIL CONNECTION REQUIREMENTS. HAVE SHOP DRAWING AVAILABLE ON SITE FOR REFERENCE DURING INSTALLATION
2. COMPLETE SLOPE PREPARATION PRIOR TO INSTALLING SYSTEM.
3. CLEAR RECOVERY AND APPROACH AREAS OF ANY FIXED OBJECTS OR HAZARDS.
4. CONSTRUCT PLATFORM AS REQUIRED WHEN THE SPACE IS AVAILABLE EVEN IF THE PLATFORM EXTENDS BEYOND THE CLEAR ZONE REQUIREMENTS. SEE STD DWG CC 8C FOR EXCEPTIONS.
   A) CONSTRUCT 6:1 OR FLATTER SLOPE FOR TRANSVERSE SLOPE FROM APPROACH PAD.
5. MOUNT OBJECT MARKER POST PER STD DWG CC 1 END TREATMENT TYPE G.

NO.	DATE	APPR.	REMARKS

REVISIONS

UTAH DEPARTMENT OF TRANSPORTATION
STANDARD DRAWINGS FOR ROAD AND BRIDGE CONSTRUCTION
SALT LAKE CITY, UTAH

RECOMMENDED FOR APPROVAL — JAN.01.2017 DATE
CHAIRMAN STANDARDS COMMITTEE APPROVED — JAN.01.2017 DATE
DEPUTY DIRECTOR — DATE

GRADING AND INSTALLATION DETAILS MSKT-SP-MGS END TREATMENT TYPE G (MASH)
STANDARD DRAWING TITLE

STD. DWG. NO.
CC 8B

28-NOV-2016 DGN File:L:\Standard Drawings\Imperial\2017 Approved\1-All Drawings\CC08B.dgn

USE THIS DETAIL FOR "3R" PROJECTS ONLY

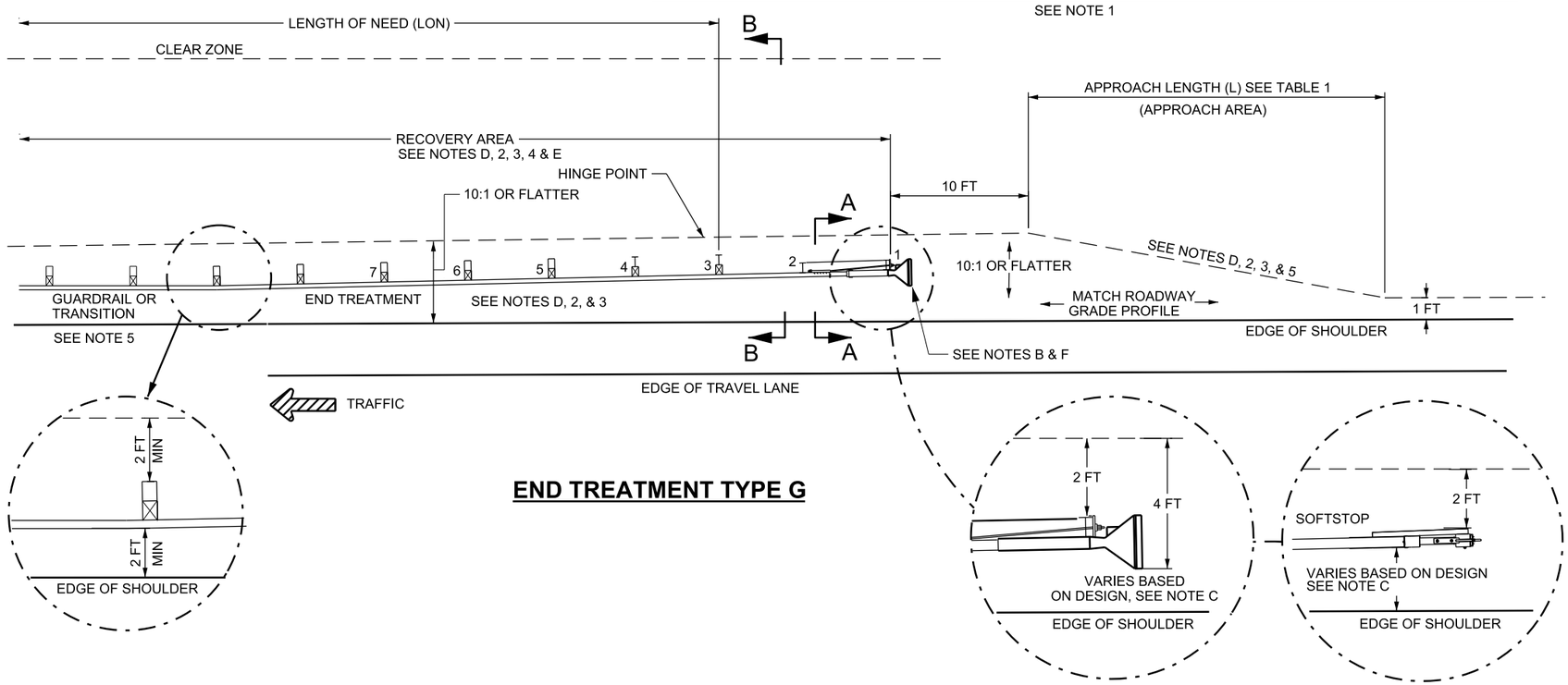

END TREATMENT TYPE G

TABLE 1	
SPEED MPH	MIN LENGTH (L)
LESS THAN 40	50 FT
40 TO 55	70 FT
60 TO 80	100 FT

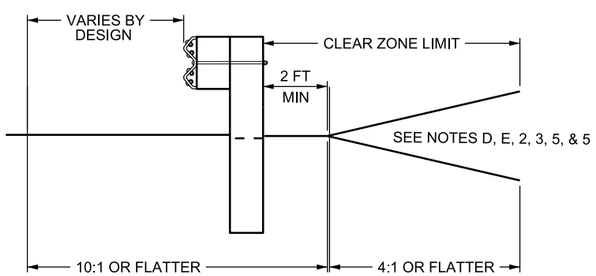

TYPICAL SECTION B-B

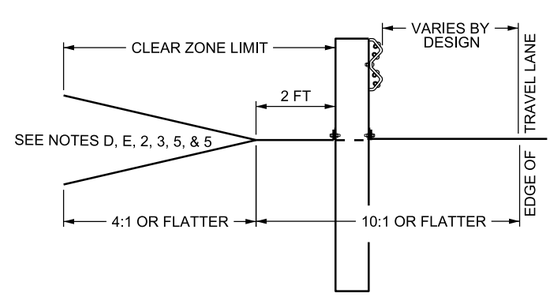

TYPICAL SECTION A-A

DESIGN-ONLY NOTES:

A. USE THIS DRAWING ONLY WHEN THERE IS INSUFFICIENT ROOM TO INSTALL MATERIALS AS REQUIRED IN STD DWG CC 8A AND CC 8B WITHOUT THE PURCHASE OF ADDITIONAL RIGHT OF WAY.
B. APPROVED SYSTEMS: SOFTSTOP MANUFACTURED BY TRINITY INDUSTRIES AND THE MSKT-SP-MGS, MANUFACTURED BY ROAD SYSTEMS INC. REFER TO UDOT GUIDELINES FOR CRASH CUSHIONS AND BARRIER END TREATMENTS FOR SPECIFIC SYSTEM DETAILS.
C. SYSTEM OFFSET:
   1. MSKT-SP-MGS: INSTALL SYSTEM WITH NO OFFSET. SYSTEM TO BE INSTALLED WITH TANGENT BARRIER
   2. SOFTSTOP: INSTALL SYSTEM WITH 2 FT OFFSET (25:1 FLARE RATE). SYSTEM TO BE INSTALLED WITH TANGENT BARRIER. SEE MANUFACTURER'S INSTALLATION MANUAL WHEN DESIGNING FOR A CONVEX OR CONCAVE CURVE.
D. USE 10:1 OR FLATTER SLOPES IN APPROACH AREA. DESIGN RECOVERY AREA SLOPES ACCORDING TO STD DWG CC 8A OR CC 8B WHEN CONDITIONS PERMIT.
   1. RECOVERY AREA IS THE AREA BEHIND THE END TREATMENT AND BARRIER SYSTEM EXTENDING FROM THE APPROACH END OF THE END TREATMENT TO THE END OF THE CALCULATED LENGTH OF NEED.
E. DO NOT PLACE SIGNS, POSTS, OR OTHER HAZARDS IN APPROACH AREA. USE BREAKAWAY SIGNS OR POSTS WHEN PLACED IN RECOVERY AREA, AND MAINTAIN A MINIMUM 10 FT CLEARANCE TO THE SIDES AND REAR OF THE SYSTEM. MITIGATE POTENTIAL HAZARDS IN RECOVERY AREA.
F. USE GUARDRAIL TRANSITION, BA 4 SERIES STD DWGS, WHEN ATTACHING SYSTEM TO CONCRETE BARRIER OR BRIDGE PARAPET.
G. USE THE ROADSIDE DESIGN GUIDE TO ESTABLISH CLEAR ZONE REQUIREMENTS AND LENGTH OF NEED (LON) REQUIREMENTS.

NOTES:

1. REFER TO MANUFACTURER'S SPECIFICATIONS FOR POST, RAIL ELEMENT, AND POST TO RAIL CONNECTION REQIRMENTS.
2. COMPLETE SLOPE PREPARATION PRIOR TO INSTALLING SYSTEM.
3. CONSULT ENGINEER FOR ALLOWABLE SLOPES WHEN REQUIREMENTS OF STD DWG CC 8A OR CC 8B CANNOT BE MET.
4. CLEAR RECOVERY AND APPROACH AREAS OF ANY FIXED OBJECTS OR HAZARDS.
5. CONSTRUCT PLATFORM AS REQUIRED WHEN THE SPACE IS AVAILABLE EVEN IF THE PLATFORM EXTENDS BEYOND THE CLEAR ZONE REQUIREMENTS.
6. INSTALL REQUIRED MARKINGS ACCORDING TO STD DWG CC 1. SEE STD DWG CC 8A FOR SOFTSTOP MARKING REQUIREMENTS.

REVISIONS

NO.	DATE	APPR.	REMARKS

UTAH DEPARTMENT OF TRANSPORTATION
STANDARD DRAWINGS FOR ROAD AND BRIDGE CONSTRUCTION
SALT LAKE CITY, UTAH

RECOMMENDED FOR APPROVAL — JAN.01.2017 DATE
CHAIRMAN STANDARDS COMMITTEE APPROVED — JAN.01.2017 DATE
DEPUTY DIRECTOR

GRADING AND INSTALLATION DETAILS FOR "3R" PROJECTS END TREATMENT TYPE G
STANDARD DRAWING TITLE

STD. DWG. NO.
CC 8C

DGN File:L:\Standard_Drawings\Imperial\2017 Approved\1-All Drawings\CC08C.dgn
28-NOV-2016

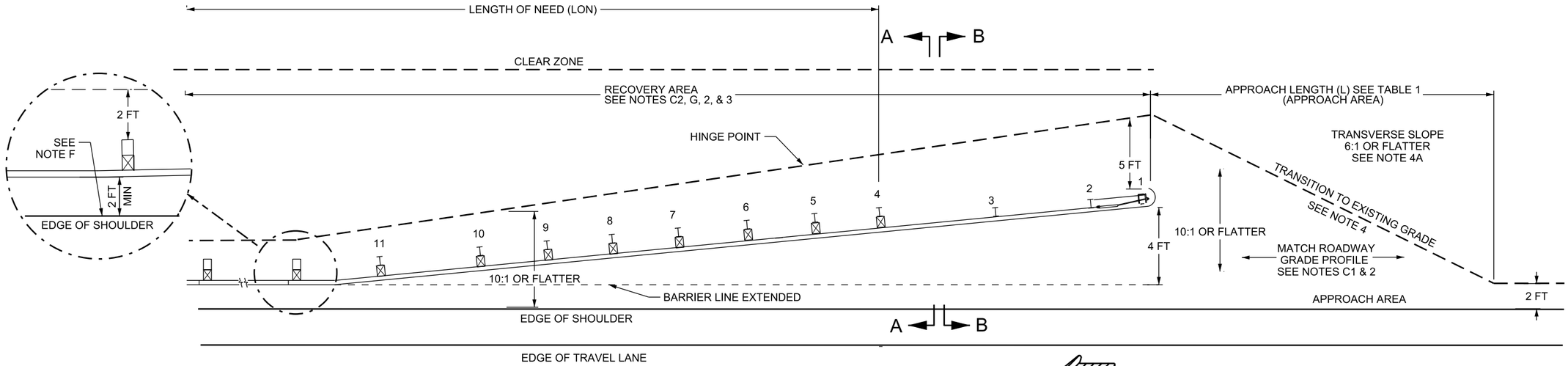

TANGENT BARRIER

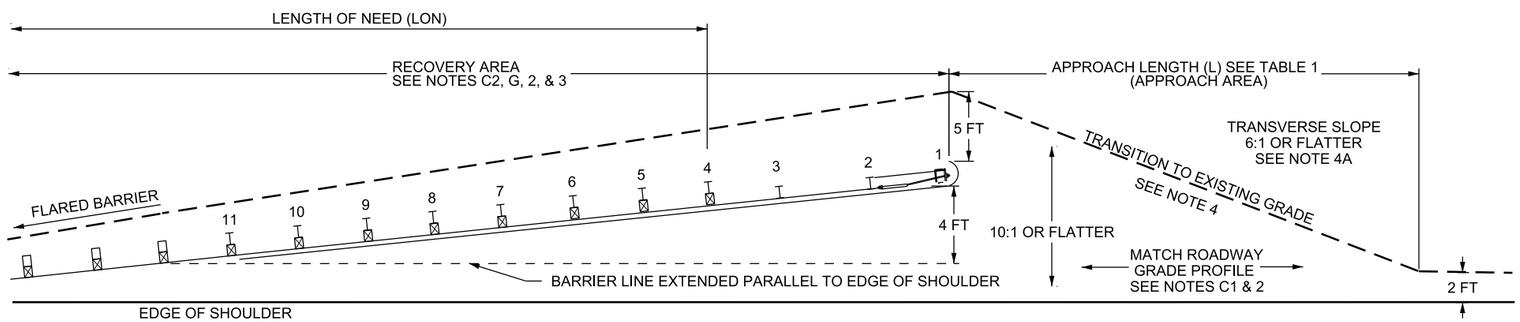

FLARED BARRIER

SEE NOTE B

TABLE 1	
SPEED MPH	MIN LENGTH (L)
LESS THAN 40	50 FT
40 TO 55	70 FT
60 TO 80	100 FT

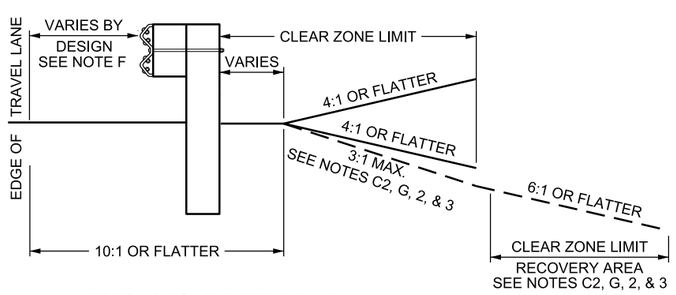

TYPICAL SECTION A-A

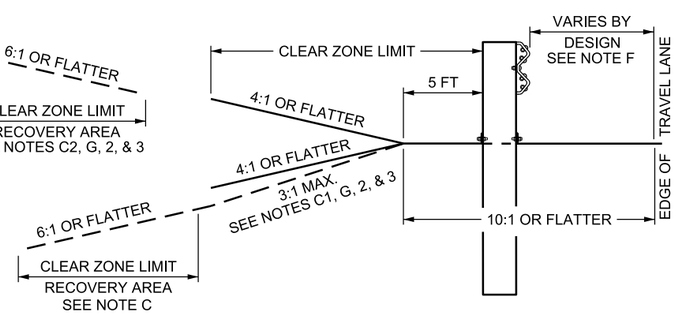

TYPICAL SECTION B-B

DESIGN-ONLY NOTES:

A. APPROVED SYSTEM: SRT-M10 MANUFACTURED BY TRINITY INDUSTRIES . REFER TO GUIDELINES FOR CRASH CUSHIONS AND BARRIER END TREATMENTS FOR SPECIFIC SYSTEM DETAILS.

B. SYSTEM OFFSET:
1. INSTALL SYSTEM WITH A 4 FT OFFSET WHEN USED WITH A TANGENT BARRIER SYSTEM.
2. INSTALL SYSTEM WITH A 4 FT OFFSET, FROM BARRIER LINE EXTENDED PARALLEL TO EDGE OF SHOULDER WHEN USED WITH A FLARED BARRIER SYSTEM.

C. MEET SLOPE REQUIREMENTS IN RECOVERY AREA AS DETAILED IN APPLICABLE DD SERIES STD DWG. THE ADDITIONAL INFORMATION LISTED BELOW IS THE MINIMUM ACCEPTABLE SLOPE REQUIREMENTS FOR THE APPROACH AREA OF THE END TREATMENT AND THE RECOVERY AREA.
1. APPROACH AREA: THE AREA PRIOR TO IMPACTING A SYSTEM.
   A) USE 10:1 OR FLATTER FORESLOPES IN APPROACH AREAS.
2. RECOVERY AREA: THE AREA BEHIND THE END TREATMENT AND BARRIER SYSTEM EXTENDING FROM THE APPROACH END OF THE END TREATMENT TO THE END OF THE CALCULATED LENGTH OF NEED.
   A) USE A 4:1 OR FLATTER FORESLOPE OR BACKSLOPE IN RECOVERY AREA.
   B) USE A 3:1 FORESLOPE IN RECOVERY AREA IF IT IS IMPRACTICAL TO USE A 4:1 FORESLOPE. ESTABLISH A RECOVERY AREA AT THE TOE OF THE 3:1 FORESLOPE OF 6:1 OR FLATTER TO CLEAR ZONE LIMITS. REFER TO STD DWG DD17 AND AASHTO ROADSIDE DESIGN GUIDE FOR ADDITIONAL INFORMATION.
   C) USE A 4:1 OR FLATTER BACKSLOPE IN RECOVERY AREA TO THE CLEAR ZONE LIMIT, IF A 4:1 OR FLATTER BACKSLOPE CANNOT BE PROVIDED A 3:1 IS ACCEPTABLE.
3. MATCH ROADWAY GRADE PROFILE TO THE HEAD OF THE SYSTEM INSIDE THE APPROACH AREAS.

D. USE GUARDRAIL TRANSITION, BA 4 SERIES STD DWGS, WHEN ATTACHING SYSTEM TO CONCRETE BARRIER OR BRIDGE PARAPET.

E. USE THE AASHTO ROADSIDE DESIGN GUIDE TO ESTABLISH CLEAR ZONE REQUIREMENTS AND LENGTH OF NEED (LON) REQUIREMENTS.

F. 2 FT MINIMUM BARRIER OFFSET IS OPTIONAL WHEN ROADWAY DESIGN REQUIRES A 12 FT OR WIDER EFFECTIVE SHOULDER.

G. DO NOT PLACE SIGNS, POSTS, OR OTHER HAZARDS IN APPROACH AREA. USE BREAKAWAY SIGNS OR POSTS WHEN PLACED IN RECOVERY AREA, AND MAINTAIN A MINIMUM 10 FT CLEARANCE TO THE SIDE AND 37.5 FT FROM THE REAR OF THE SYSTEM. MITIGATE POTENTIAL HAZARDS IN THE RECOVERY AREA.

NOTES:

1. REFER TO MANUFACTURER'S SPECIFICATIONS FOR POST, RAIL ELEMENT, AND POST TO RAIL CONNECTION REQUIREMENTS. HAVE SHOP DRAWING AVAILABLE ON SITE FOR REFERENCE DURING INSTALLATION.
2. COMPLETE SLOPE PREPARATION PRIOR TO INSTALLING SYSTEM.
3. CLEAR RECOVERY AND APPROACH AREAS OF ANY FIXED OBJECTS OR HAZARDS.
4. CONSTRUCT PLATFORM AS REQUIRED WHEN THE SPACE IS AVAILABLE EVEN IF THE PLATFORM EXTENDS BEYOND THE CLEAR ZONE REQUIREMENTS. SEE STD DWG CC 8C FOR EXCEPTIONS.
   A) CONSTRUCT 6:1 OR FLATTER SLOPE FOR TRANSVERSE SLOPE FROM APPROACH PAD.
5. MOUNT OBJECT MARKER POST PER STD DWG CC 1 END TREATMENT TYPE H.

NO.	DATE	APPR.	REMARKS

REVISIONS

UTAH DEPARTMENT OF TRANSPORTATION
STANDARD DRAWINGS FOR ROAD AND BRIDGE CONSTRUCTION
SALT LAKE CITY, UTAH

RECOMMENDED FOR APPROVAL — JAN.01.2017 DATE
CHAIRMAN STANDARDS COMMITTEE APPROVED — JAN.01.2017 DATE
DEPUTY DIRECTOR

GRADING AND
INSTALLATION DETAILS
SRT M10
END TREATMENT TYPE H
(MASH)

STANDARD DRAWING TITLE

STD. DWG. NO.
CC 9

28-NOV-2016 DGN File:L:\Standard_Drawings\Imperial\2017 Approved\1-All Drawings\CC09.dgn

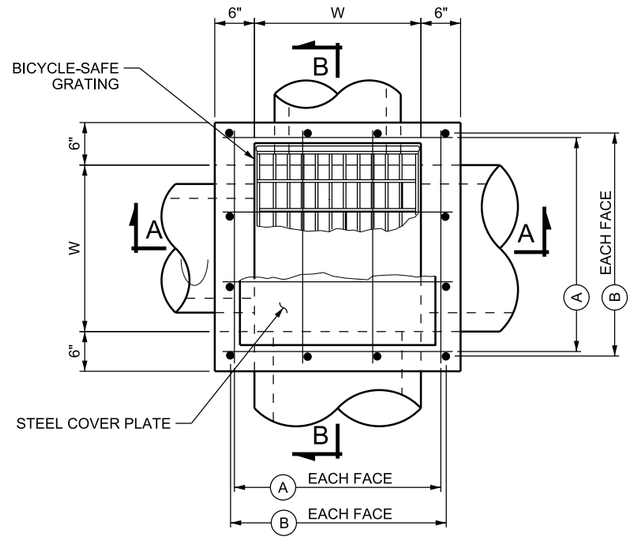

DIVERSION BOX PLAN

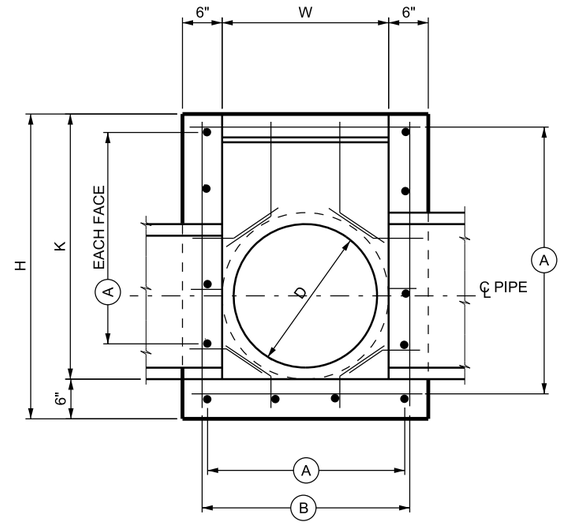

SECTION A-A

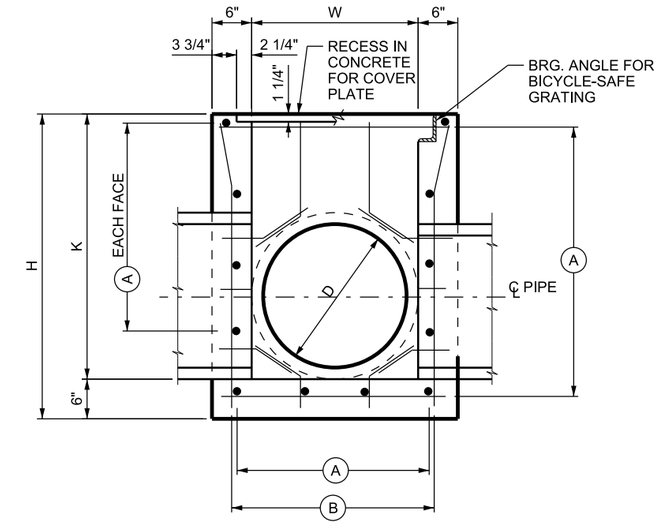

SECTION B-B

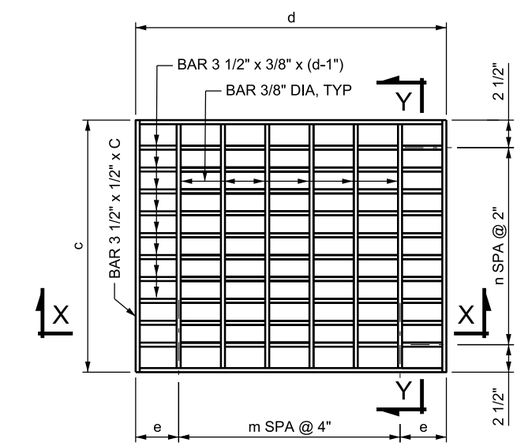

PLAN

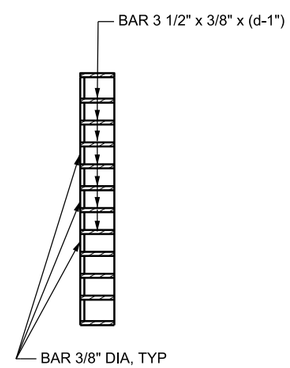

SECTION Y-Y

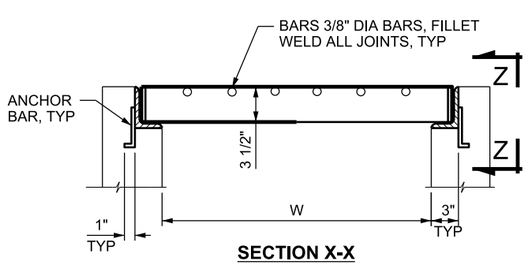

SECTION X-X

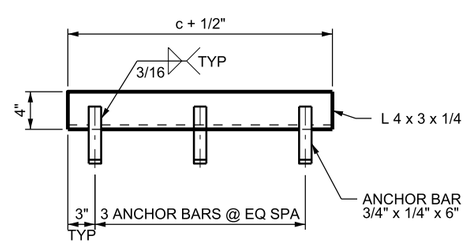

VIEW Z-Z

BICYCLE-SAFE GRATING

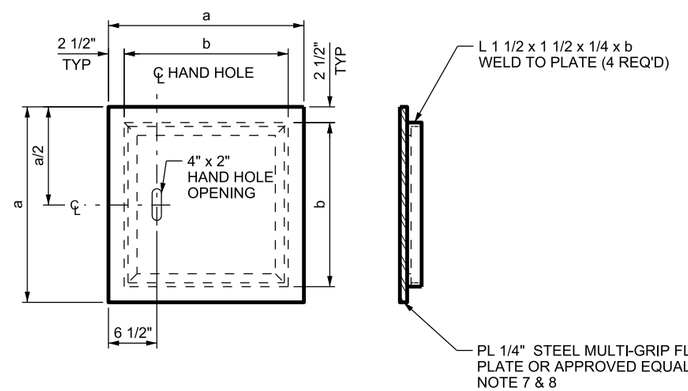

STEEL COVER PLATE

DESIGN DATA

HL-93 IN ACCORDANCE WITH AASHTO LRFD BRIDGE DESIGN AND INTERIM SPECIFICATIONS

REINFORCING STEEL: fy = 60,000 psi
STRUCTURAL STEEL: Fy = 36,000 psi
STRUCTURAL CONCRETE: f 'c = 4,000 psi; n = 8

GENERAL NOTES:

1. REFERENCE DB SERIES STD DWGS.
2. USE COATED DEFORMED-CARBON REINFORCING STEEL BARS CONFORMING TO AASHTO M 284 OR M 111 AND M 31 GRADE 60 RESPECTIVELY.
3. FIELD CUT AND BEND REINFORCING STEEL AS NECESSARY TO CLEAR PIPES AND MAINTAIN 2 INCH COVER. REPAIR ANY DAMAGE OR CUTS TO THE COATING ON REINFORCING BARS. ALL BARS TO BE #5 AT 12 INCH PLUS OR MINUS.
4. USE CLASS AA (AE) CONCRETE.
5. USE TYPE II CEMENT (LOW ALKALI).
6. PROVIDE 2 INCH CONCRETE COVER TO REINFORCING STEEL.
7. USE COVER PLATE ONLY IN APPLICATIONS THAT WILL NOT CARRY TRAFFIC.
8. HOT-DIP GALVANIZE GRATING AND BEARING ANGLES AFTER FABRICATION IN ACCORDANCE WITH AASHTO DESIGNATION M 111 (ASTM A 123).

REVISIONS			
NO.	DATE	APPR.	REMARKS

UTAH DEPARTMENT OF TRANSPORTATION
STANDARD DRAWINGS FOR ROAD AND BRIDGE CONSTRUCTION
SALT LAKE CITY, UTAH

RECOMMENDED FOR APPROVAL — JAN.01, 2017 DATE
CHAIRMAN STANDARDS COMMITTEE APPROVED — JAN.01, 2017 DATE
DEPUTY DIRECTOR

STANDARD DIVERSION BOX/COVER PLATE/ GRATING FOR 18 INCH DIA. OR 24 INCH DIA.PIPE
STANDARD DRAWING TITLE

STD. DWG. NO.
DB 1A

DGN File: L:\Standard Drawings\Imperial\2017 Approved\1-All Drawings\DB01A.dgn
28-NOV-2016

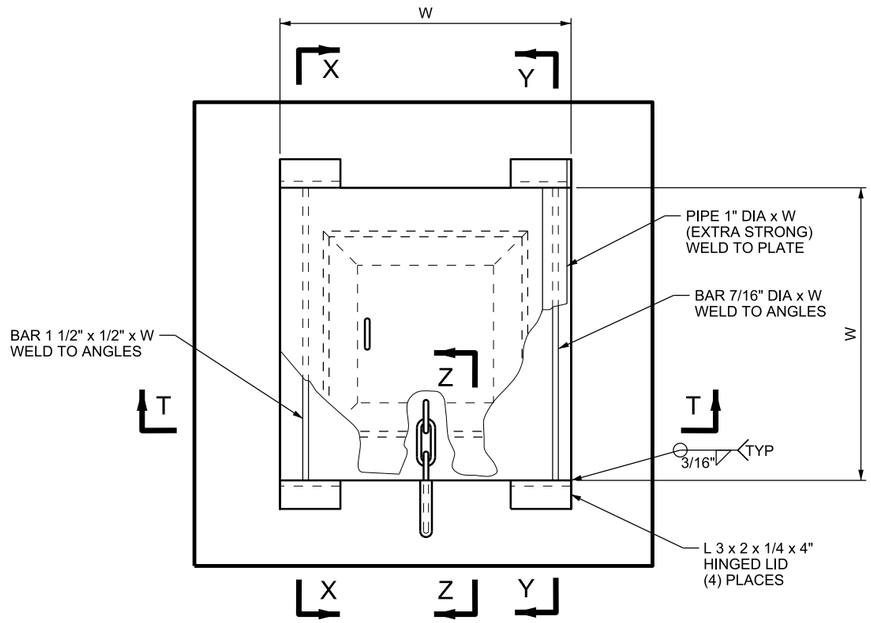

PLAN

SEE STD DWG DB 1C FOR "SECTION Z-Z"

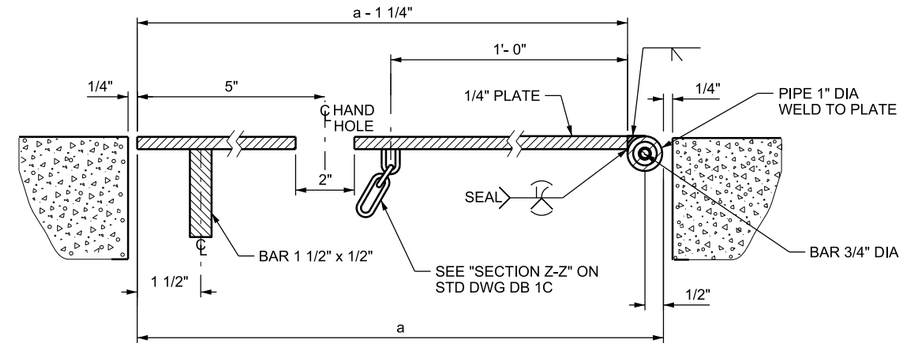

SECTION T-T

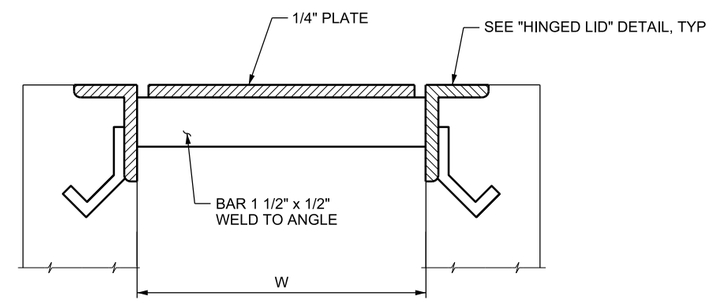

SECTION X-X

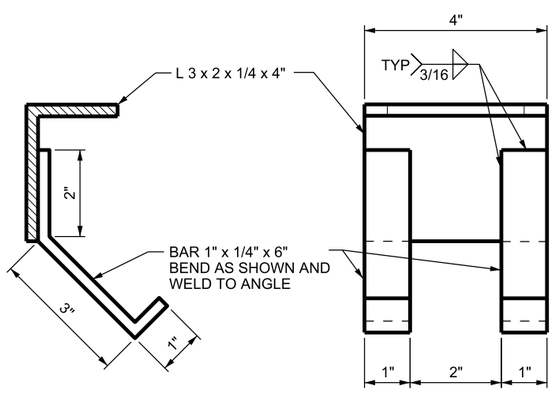

HINGED LID

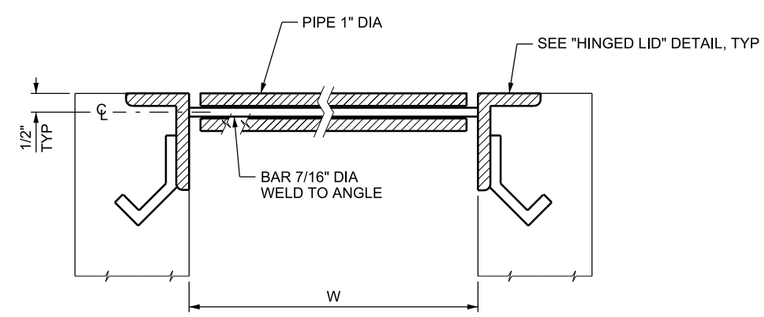

SECTION Y-Y

NOTES

1. REFERENCE DB SERIES STD DWGS.
2. SEE SCHEDULE ON STD DWG DB 1D FOR DIMENSIONS AND QUANTITIES.
3. USE LIDS ONLY IN APPLICATIONS THAT WILL NOT CARRY TRAFFIC.

REVISIONS

NO.	DATE	APPR.	REMARKS

UTAH DEPARTMENT OF TRANSPORTATION
STANDARD DRAWINGS FOR ROAD AND BRIDGE CONSTRUCTION
SALT LAKE CITY, UTAH

RECOMMENDED FOR APPROVAL — JAN.01, 2017 DATE
CHAIRMAN STANDARDS COMMITTEE APPROVED — JAN.01, 2017 DATE
DEPUTY DIRECTOR

STANDARD DIVERSION BOX HINGED LID DETAILS FOR 18 INCH DIA OR 24 INCH DIA PIPE

STANDARD DRAWING TITLE

STD. DWG. NO.
DB 1B

DGN File: L:\Standard_Drawings\Imperial\2017 Approved\1-All Drawings\DB01B.dgn
28-NOV-2016

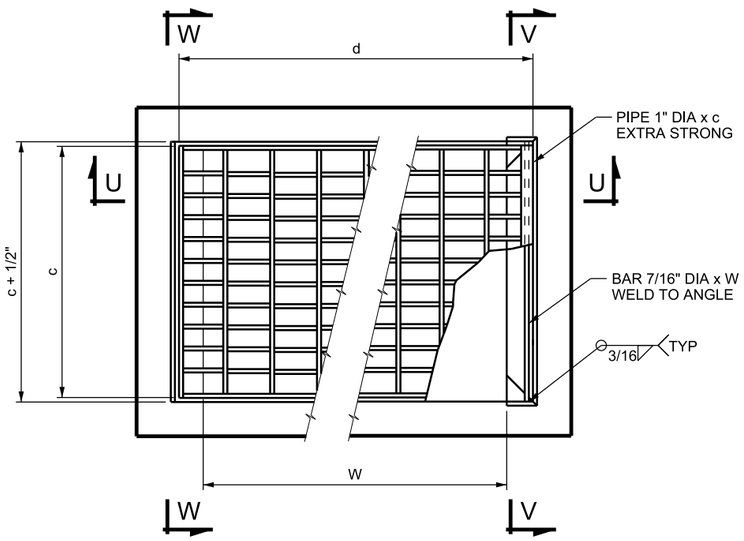

BICYCLE-SAFE GRATING PLAN

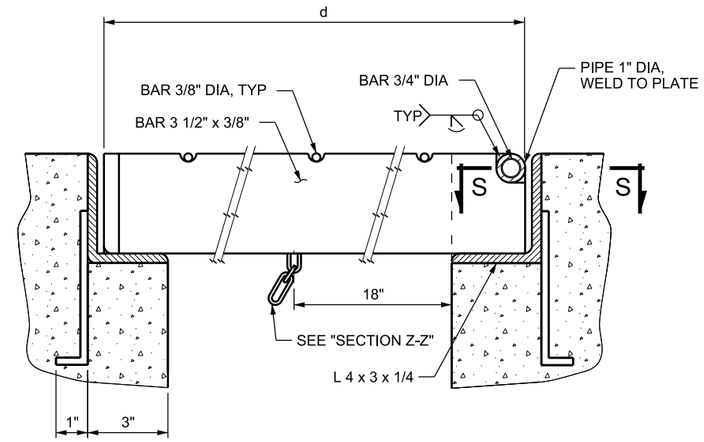

SECTION U-U

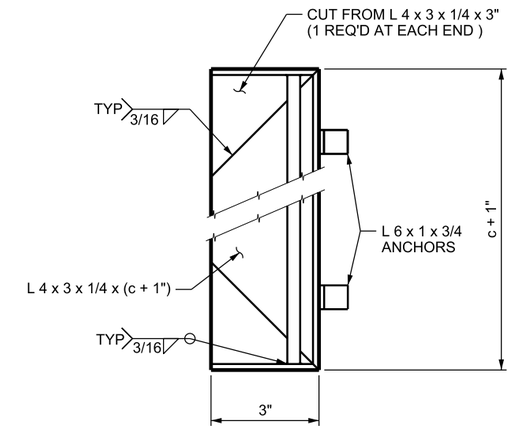

SECTION S-S

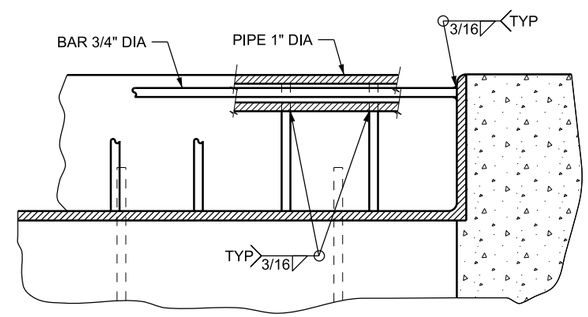

SECTION V-V

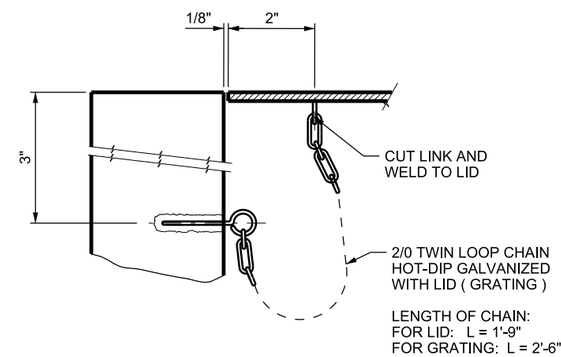

SECTION Z-Z

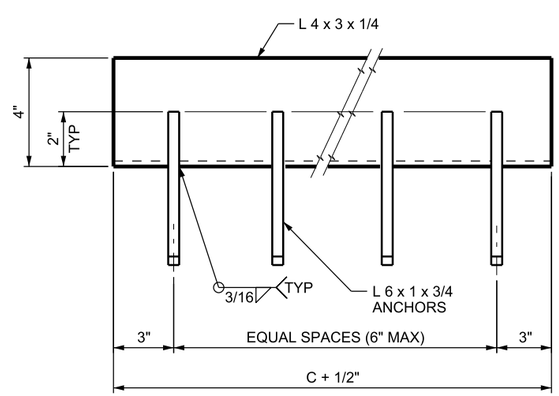

SECTION W-W

NOTES

1. REFERENCE DB SERIES STD DWGS.
2. SEE SCHEDULE ON STD DWG DB 1D FOR DIMENSIONS AND QUANTITIES.

REVISIONS

NO.	DATE	APPR.	REMARKS

UTAH DEPARTMENT OF TRANSPORTATION
STANDARD DRAWINGS FOR ROAD AND BRIDGE CONSTRUCTION
SALT LAKE CITY, UTAH

RECOMMENDED FOR APPROVAL — JAN. 01, 2017 DATE
CHAIRMAN STANDARDS COMMITTEE APPROVED — JAN. 01, 2017 DATE
DEPUTY DIRECTOR

STANDARD DIVERSION BOX BICYCLE-SAFE GRATING DETAILS FOR 18 INCH DIA OR 24 INCH DIA PIPE

STANDARD DRAWING TITLE

STD. DWG. NO.
DB 1C

28-NOV-2016 DGN File:L:\Standard Drawings\Imperial\2017 Approved\1-All Drawings\DB01C.dgn

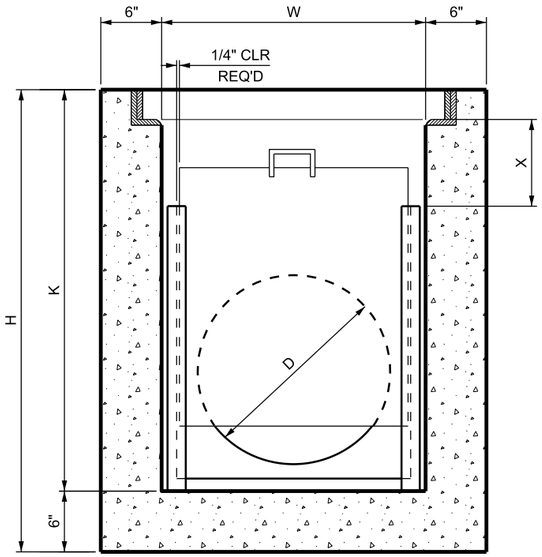

FRAME AND GATE INSTALLATION

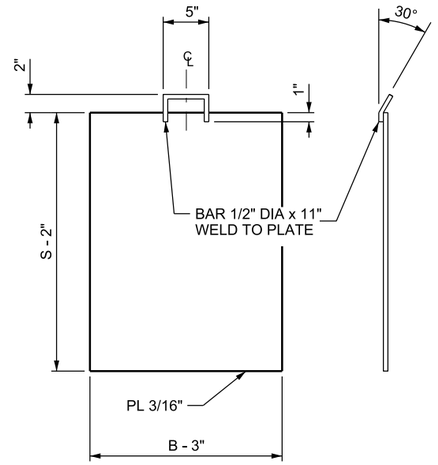

GATE

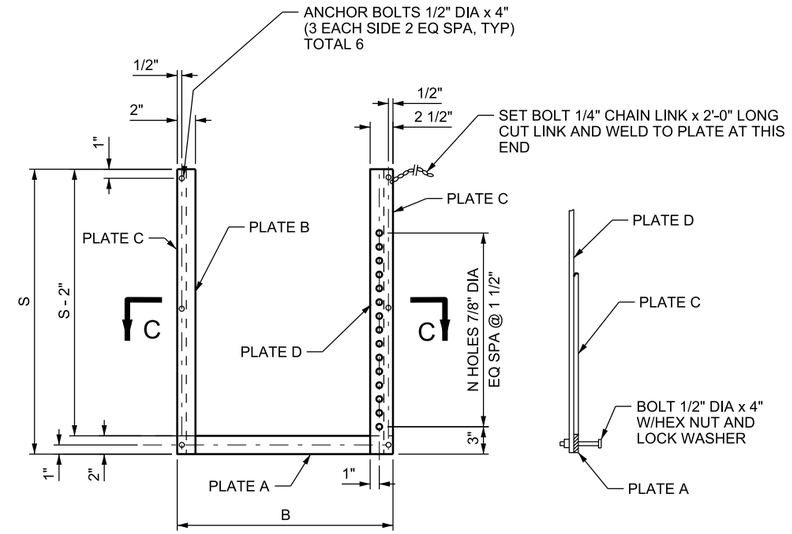

FRAME

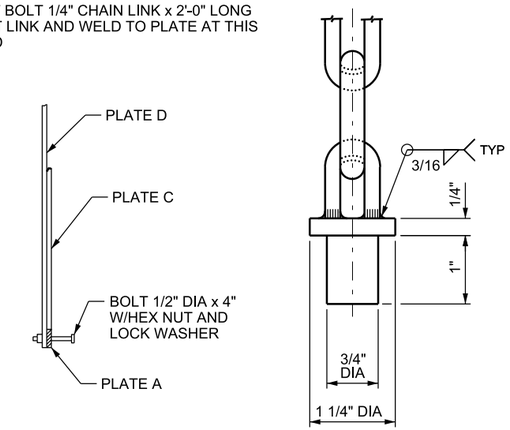

SET BOLT

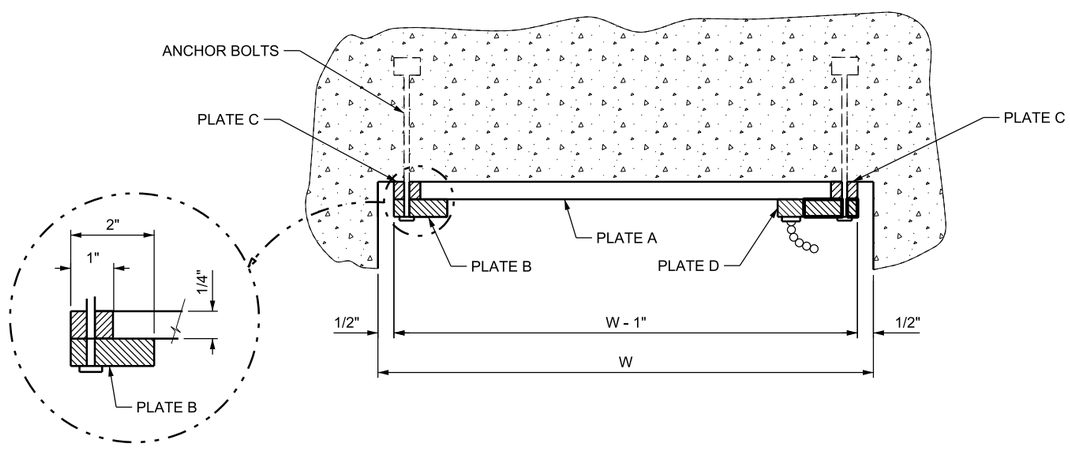

SECTION C-C

SCHEDULE NO. 1

	LINE	DIMENSIONS H	DIMENSIONS K	DIMENSIONS W	DIMENSIONS X	REINFORCING STEEL A-BARS LENGTH	REINFORCING STEEL A-BARS NO	REINFORCING STEEL B-BARS LENGTH	REINFORCING STEEL B-BARS NO	QUANTITIES REINF STL LBS	QUANTITIES CONC CU YD	QUANTITIES STRUCTURAL STEEL GRATING LBS	QUANTITIES STRUCTURAL STEEL COVER PLATE LBS	QUANTITIES STRUCTURAL STEEL FRAME LBS	QUANTITIES STRUCTURAL STEEL GATE LBS
2'- 1"	1	2'- 6"	2'- 0"	2'- 0"	0	2'- 8"	16	2'- 1"	12	71	.525	177	80	18	26
2'- 7"	2	3'- 0"	2'- 6"	▲	6"	▲	16	2'- 7"	▲	77	.617	▲	▲	▲	▲
3'- 1"	3	3'- 6"	3'- 0"		1'- 0"		16	3'- 1"		83	.710				
3'- 7"	4	4'- 0"	3'- 6"		1'- 6"		20	3'- 7"		100	.802				
4'- 1"	5	4'-0"	4'- 0"		2'- 0"		20	4'-1"		107	.895				
4'- 7"	6	5'-0"	4'- 6"		2'- 6"		24	4'- 7"		124	.988				
5'- 1"	7	5'- 6"	5'- 0"		3'- 0"		24	5'- 1"		130	1.080				
5'- 7"	8	6'- 0"	5'- 6"		3'- 6"		28	5'- 7"		148	1.173				
6'- 1"	9	6'- 6"	6'- 0"	▼	4'- 0"	▼	28	6'- 1"	▼	154	1.265	▼	▼	▼	▼
6'- 7"	10	7'- 0"	6'- 6"	2'- 0"	4'- 6"	2'- 8"	32	6'- 7"	12	171	1.358	177	80	18	26
2'- 7"	11	3'- 0"	2'- 6"	2'- 6"	0	3'- 2"	16	2'- 7"	12	85	.770	254	114	21	41
3'- 1"	12	3'-6"	3'- 0"	▲	6"	▲	16	3'- 1"	▲	91	.878	▲	▲	▲	▲
3'- 7"	13	4'- 0"	3'- 6"		1'- 0"		20	3'- 7"		111	.989				
4'- 1"	14	4'- 6"	4'- 0"		1'- 6"		20	4'- 1"		117	1.100				
4'- 7"	15	5'- 0"	4'- 6"		2'- 0"		24	4'- 7"		137	1.211				
5'- 1"	16	5'- 6"	5'- 0"		2'- 6"		24	5'-1"		143	1.323				
5'- 7"	17	6'- 0"	5'- 6"		3'- 0"		28	5'- 7"		162	1.434				
6'- 1"	18	6'- 6"	6'- 0"		3'- 6"		28	6'- 1"		169	1.545				
6'- 7"	19	7'- 0"	6'- 6"	▼	4'- 0"	▼	32	6'-7"	▼	188	1.656	▼	▼	▼	▼
7'- 1"	20	7'- 6"	7'- 0"	2'- 6"	4'- 6"	3'- 2"	32	7'- 1"	12	194	1.767	254	114	21	41

SCHEDULE NO. 2

PIPE SIZE	DIMENSIONS AND QUANTITIES															
	COVER PLATE		BICYCLE-SAFE GRATING						FRAME AND GATE							
SEE NOTE 4 → D	a	b	c	d	e	m	n	B	S	N	1-PLATE A	1-PLATE B	2-PLATE C	1-PLATE D	GATE
18"	2'- 4"	1'-11"	1'-11"	2'- 4 ½"	4 ¼"	5	9	1'-11"	2'- 0"	12	¼" x 2" x 1'- 11"	¼" x 2" x 2'- 0"	¼" x 1" x 1'-10"	¼" x 2 ½" x 2'- 0"	3/16" x 20 ½" x 1'-10"
24"	2'- 10"	2'- 5"	2'- 5"	2'- 10½"	5 ¼"	6	12	2'- 5"	2'- 6"	15	¼" x 2" x 2'- 5"	¼" x 2" x 2'- 6"	¼" x 1" x 2'- 4"	¼" x 2 ½" x 2'- 6"	3/16" x 26 ½" x 2'- 4"

SEE NOTE 5 → D	a
18"	1'-11½"
24"	2'- 5½"

NOTES

1. REFERENCE DB SERIES STD DWGS.
2. CALCULATIONS OF CONCRETE QUANTITIES ARE FOR BOXES WITH BICYCLE-SAFE GRATING AND NO OPENINGS FOR PIPES.
3. ADD 0.011 CUBIC YARDS OF CONCRETE IN LINES 1 THRU 10 INCLUSIVE AND 0.014 CUBIC YARDS OF CONCRETE IN LINES 11 THRU 20 INCLUSIVE AND DEDUCT 0.053 CUBIC YARDS OF CONCRETE FOR EACH 18 INCH DIA PIPE IN LINES 1 THRU 10 INCLUSIVE AND 0.091 CUBIC YARDS OF CONCRETE FOR EACH 24 INCH DIA PIPE IN LINES 11 THRU 20 INCLUSIVE FOR SOLID COVER.
4. THE GATES CAN ONLY BE PARTIALLY OPENED TO ALLOW THE GRATING OR COVER PLATE TO BE REPLACED IF DIMENSION X IS LESS THAN INSIDE PIPE DIAMETER D.
5. SEE STD DWG DB 1A FOR "STEEL COVER PLATE" DETAIL.
6. SEE STD DWG DB 1B FOR "HINGED LID" DETAIL.

REVISIONS

NO.	DATE	APPR.	REMARKS

UTAH DEPARTMENT OF TRANSPORTATION
STANDARD DRAWINGS FOR ROAD AND BRIDGE CONSTRUCTION
SALT LAKE CITY, UTAH

RECOMMENDED FOR APPROVAL — JAN.01.2017 DATE
CHAIRMAN STANDARDS COMMITTEE APPROVED — JAN.01.2017 DATE
DEPUTY DIRECTOR

STANDARD DIVERSION BOX THREE GATE BOX SECTIONS FOR 18 INCH DIA OR 24 INCH DIA PIPE

STANDARD DRAWING TITLE

STD. DWG. NO.
DB 1D

DGN File: L:\Standard Drawings\Imperial\2017 Approved\1-01 Drawings\DB01D.dgn
28-NOV-2016

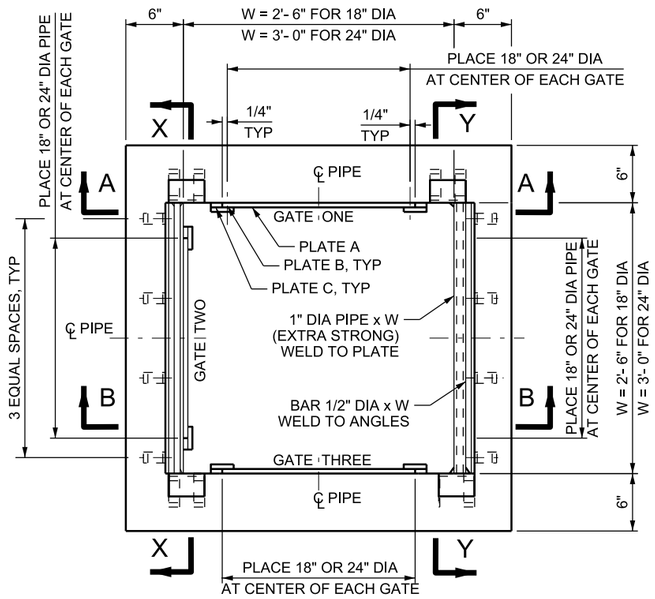

3 GATE PLAN

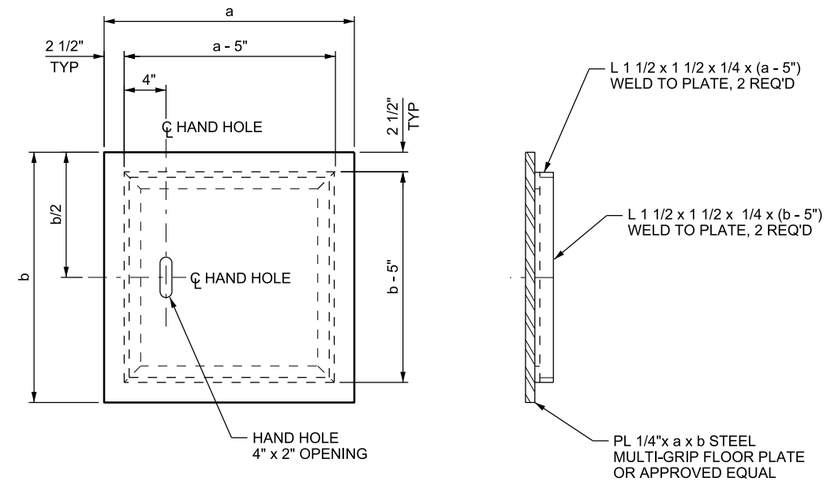

STEEL COVER PLATE

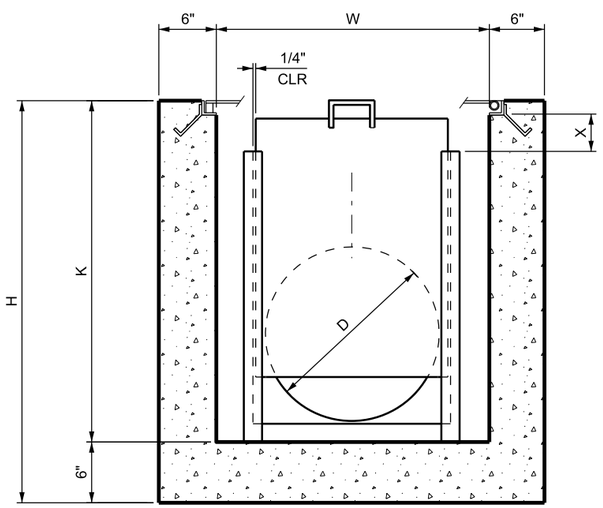

SECTION A-A

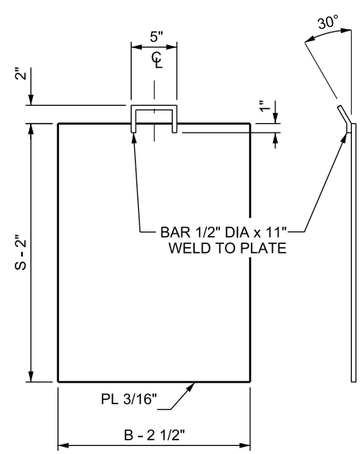

GATE

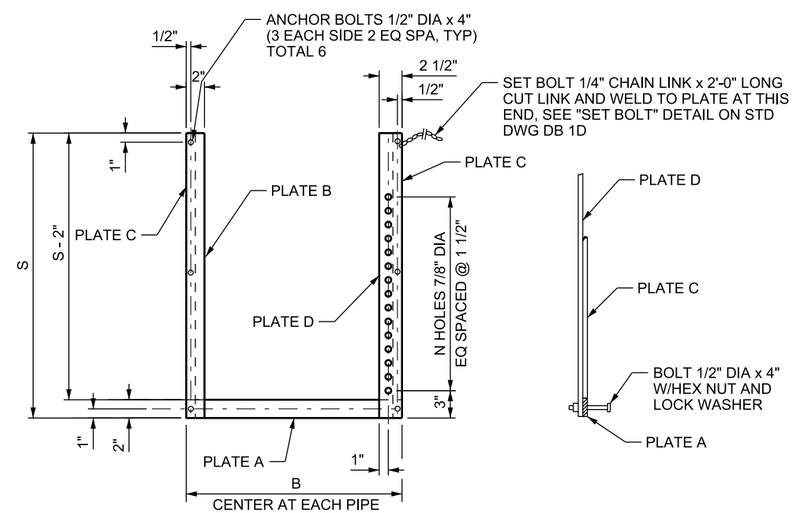

FRAME

NOTES

1. REFERENCE DB SERIES STD DWGS.
2. SEE SCHEDULES ON STD DWG DB 1F FOR DIMENSIONS AND QUANTITIES.
3. SEE STD DWG DB 1F FOR SECTION B-B, X-X AND Y-Y.

NO.	DATE	APPR.	REMARKS

REVISIONS

UTAH DEPARTMENT OF TRANSPORTATION
STANDARD DRAWINGS FOR ROAD AND BRIDGE CONSTRUCTION
SALT LAKE CITY, UTAH

RECOMMENDED FOR APPROVAL — JAN.01, 2017 DATE
CHAIRMAN STANDARDS COMMITTEE APPROVED — JAN.01, 2017 DATE
DEPUTY DIRECTOR

STANDARD DIVERSION
BOX THREE GATE
BOX SECTIONS FOR
18 INCH DIA OR
24 INCH DIA PIPE

STANDARD DRAWING TITLE

STD. DWG. NO.
DB 1E

DGN File: L:\Standard Drawings\Imperial\2017 Approved\1-All Drawings\DB01E.dgn
28-NOV-2016

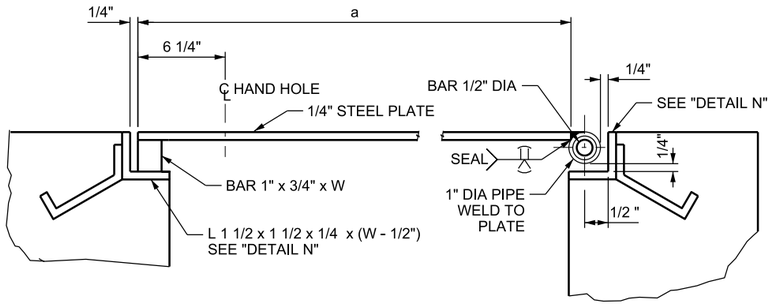

SECTION B-B

(SECTION IS TAKEN FROM STD DWG DB 1E)

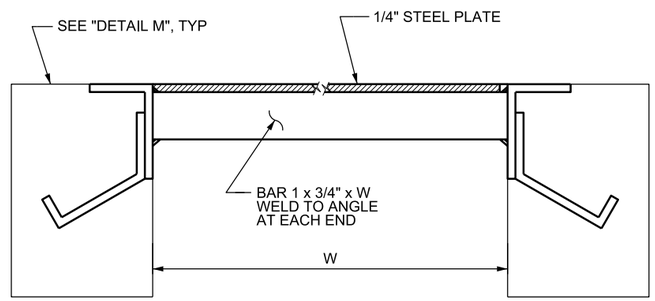

SECTION X-X

(SECTION IS TAKEN FROM STD DWG DB 1E)

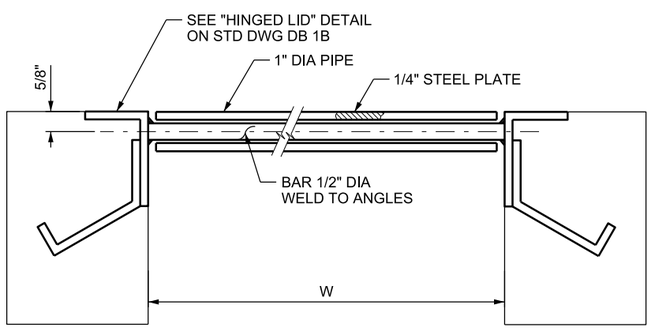

SECTION Y-Y

(SECTION IS TAKEN FROM STD DWG DB 1E)

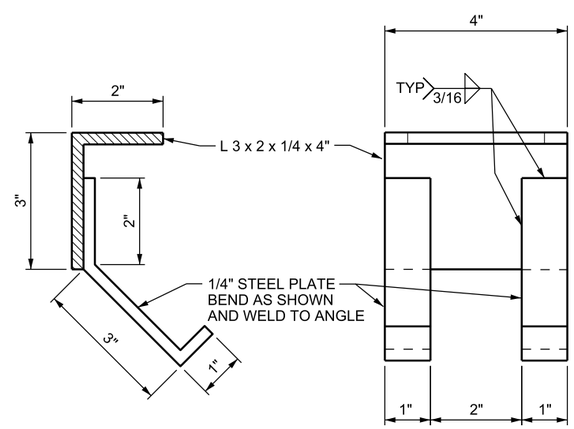

DETAIL M

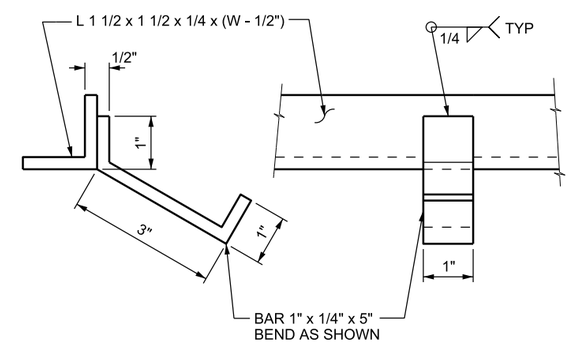

DETAIL N

SCHEDULE NO. 1

LINE	DIMENSIONS				REINFORCING STEEL				STRUCTURAL STEEL					
					A-BARS		B-BARS				QUANTITIES			
	H	K	W	X	LENGTH	NO	LENGTH	NO	REINF STEEL LB.	CONC CU YD	PIPES, BARS & ANGLES lbs	COVER PL lbs	FRAME* lbs	GATE lbs EA.
1	2'- 6"	2'- 0"	2'- 6"	0"	3'-2"	16	2'- 1"	12	79	0.672	31	85	14	25
2	3'- 0"	2'- 6"	↑	6"	↑	16	2'- 7"	↑	85	0.783	↑	↑	↑	↑
3	3'- 6"	3'- 0"		1'- 0"		16	3'- 1"		91	0.894				
4	4'- 0"	3'- 6"		1'- 6"		20	3'- 7"		111	1.005				
5	4'- 6"	4'- 0"		2'- 0"		20	4'- 1"		117	1.116				
6	5'- 0"	4'- 6"		2'- 6"		24	4'- 7"		137	1.227				
7	5'- 6"	5'- 0"		3'- 0"		24	5'- 1"		143	1.338				
8	6'- 0"	5'- 6"		3'- 6"		28	5'- 7"		163	1.450				
9	6'- 6"	6'- 0"	↓	4'- 0"	↓	28	6'- 1"	↓	169	1.561	↓	↓	↓	↓
10	7'- 0"	6'- 6"	2'- 6"	4'- 6"	3'- 2"	32	6'- 7"	12	188	1.672	31	85	14	25
11	3'- 0"	2'- 6"	3'- 0"	0"	3'- 8"	16	2'- 7"	16	104	0.944	35	118	18	41
12	3'- 6"	3'- 0"	↑	6"	↑	16	3'- 1"	↑	113	1.074	↑	↑	↑	↑
13	4'- 0"	3'- 6"		1'- 0"		20	3'- 7"		136	1.203				
14	4'- 6"	4'- 0"		1'- 6"		20	4'- 1"		145	1.333				
15	5'- 0"	4'- 6"		2'- 0"		24	4'- 7"		168	1.463				
16	5'- 6"	5'- 0"		2'- 6"		24	5'- 1"		177	1.592				
17	6'- 0"	5'- 6"		3'- 0"		28	5'- 7"		200	1.722				
18	6'- 6"	6'- 0"		3'- 6"		28	6'- 1"		209	1.852				
19	7'- 0"	6'- 6"	↓	4'- 0"	↓	32	6'- 7"	↓	232	1.981	↓	↓	↓	↓
20	7'- 6"	7'- 0"	3'- 0"	4'- 6"	3'- 8"	32	7'- 1"	35	241	2.111	16	118	18	41

* PLATES A TO D PER GATE

SCHEDULE NO. 2

PIPE SIZE	DIMENSIONS AND QUANTITIES									
	COVER PLATE		FRAME AND GATE							
D	a	b	B	S	N	1-PLATE A	1-PLATE B	2-PLATE C	GATE SIZE	1-PLATE D
18"	2'- 7	2'-5 1/2	1'- 11	2'- 0	12	1/4" x 2" x 1'-11	1/4" x 2" x 2'- 0	1/4" x 1" x 1'- 10	3/16" x 20 1/2" x 1'- 10	1/4" x 2 1/2" x 2'- 0
24"	3'- 1	2'- 11 1/2	2'- 5	2'- 6	15	1/4" x 2" x 2'-5	1/4" x 2" x 2'- 6	1/4" x 1" x 2'- 4	3/16" x 26 1/2" x 2'- 4	1/4" x 2 1/2" x 2'- 6

NOTES

1. REFERENCE DB SERIES STD DWGS.
2. USE LIDS ONLY IN APPLICATIONS THAT WILL NOT CARRY TRAFFIC.

REVISIONS

NO.	DATE	APPR.	REMARKS

UTAH DEPARTMENT OF TRANSPORTATION
STANDARD DRAWINGS FOR ROAD AND BRIDGE CONSTRUCTION
SALT LAKE CITY, UTAH

RECOMMENDED FOR APPROVAL — JAN.01, 2017 DATE
CHAIRMAN STANDARDS COMMITTEE APPROVED — JAN.01, 2017 DATE
DEPUTY DIRECTOR

STANDARD DIVERSION
BOX THREE GATE
BOX SECTIONS FOR
18 INCH DIA OR
24 INCH DIA PIPE

STANDARD DRAWING TITLE

STD. DWG. NO.
DB 1F

DGN File: L:\Standard_Drawings\Imperial\2017 Approved\1-All Drawings\DB01F.dgn
28-NOV-2016

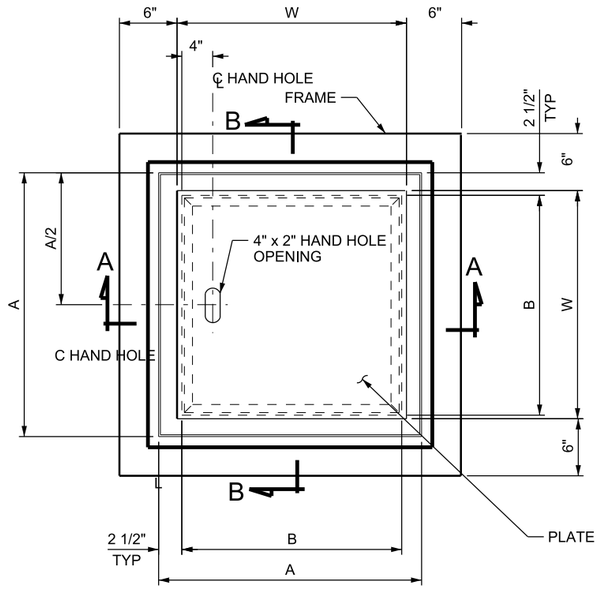

COVER PLAN

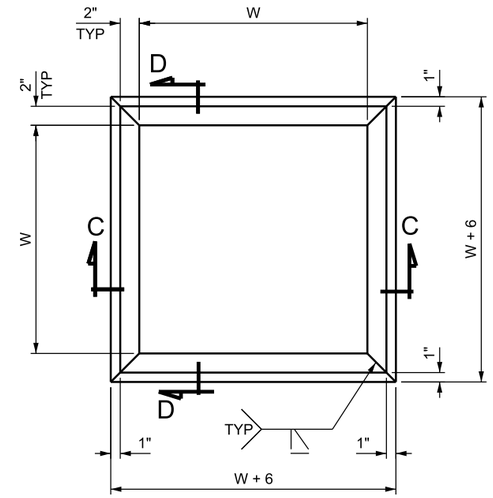

PLAN

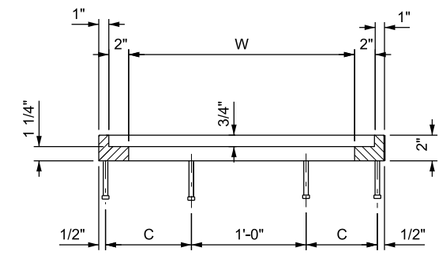

SECTION C-C or D-D

FRAME DETAILS

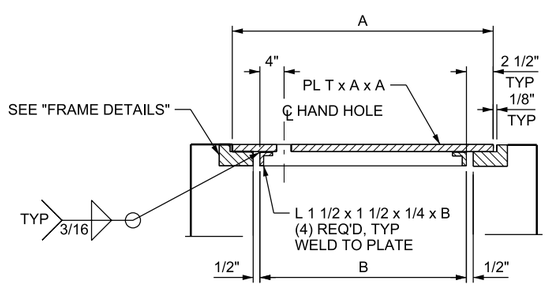

SECTION A-A

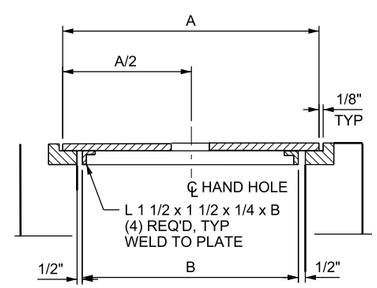

SECTION B-B

DIMENSIONS					QUANTITIES (LB)		
W	A	B	C	T	COVER	FRAME	TOTAL
2'- 0"	2'- 3 3/4"	1'- 10 3/4"	8 1/2"	1/2"	131	163	294
2'- 6"	2'- 9 3/4"	2'- 4 3/4"	11 1/2"	5/8"	189	195	384

DESIGN DATA

STRUCTURAL STEEL: Fy = 36,000 psi

DESIGN ONLY NOTES:

A. USE SOLID COVER ONLY IN APPLICATIONS THAT WILL NOT CARRY TRAFFIC.

NOTES:

1. ALL STRUCTURAL STEEL: STRUCTURAL CARBON STEEL CONFORMING TO AASHTO M 270, GRADE 36, AND HOT DIP GALVANIZE AFTER FABRICATION IN ACCORDANCE WITH ASTM A 123.

REVISIONS

NO.	DATE	APPR.	REMARKS

UTAH DEPARTMENT OF TRANSPORTATION
STANDARD DRAWINGS FOR ROAD AND BRIDGE CONSTRUCTION
SALT LAKE CITY, UTAH

RECOMMENDED FOR APPROVAL — JAN. 01, 2017 DATE
CHAIRMAN STANDARDS COMMITTEE APPROVED — JAN. 01, 2017 DATE
DEPUTY DIRECTOR

SOLID COVER FOR STD DWG DB 1

STANDARD DRAWING TITLE

STD. DWG. NO.
DB 1G

DGN File: L:\Standard Drawings\Imperial\2017 Approved\1-01 Drawings\DB01G.dgn
28-NOV-2016

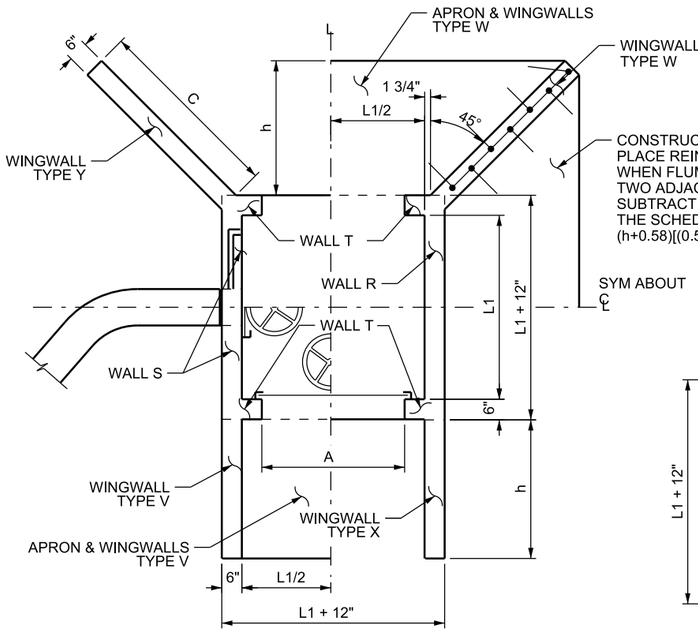

PLAN
DIVERSION BOX
W / INTERCHANGEABLE WALLS

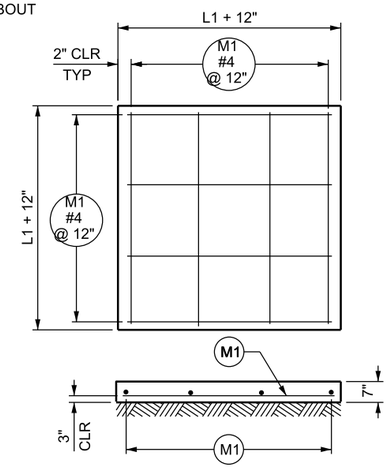

BOTTOM SLAB

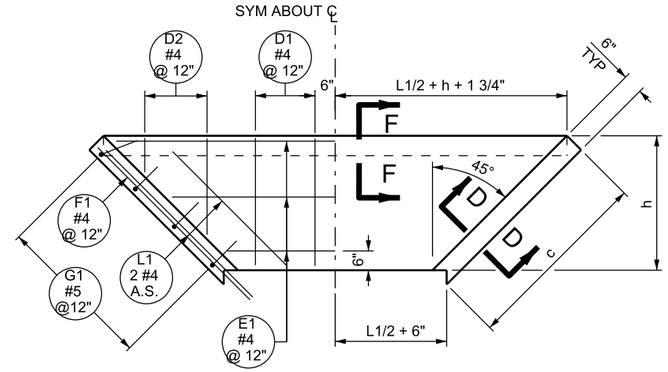

SYM ABOUT C

PLAN
APRON & WINGWALL TYPE W

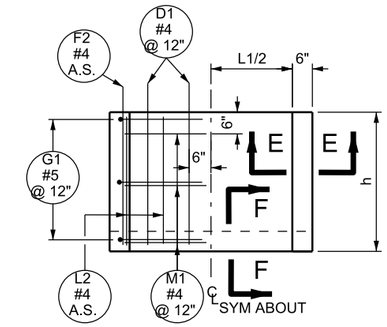

PLAN
APRON & WINGWALL TYPE V

PROVIDE CUT-OFF WALL ONLY WHEN CALLED FOR IN NOTE. PROVIDE WHEN SO SPECIFIED, FOR ALL APRONS SHOWN IN NOTE. SEE ROADWAY PLANS.

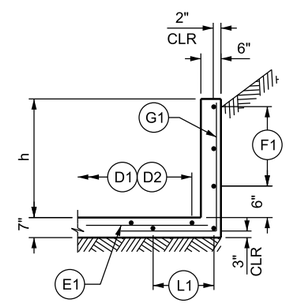

SECTION D-D

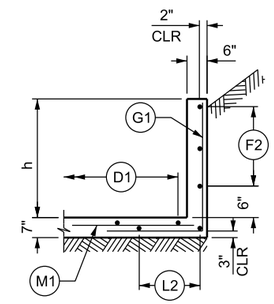

SECTION E-E

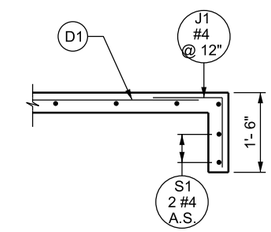

SECTION F-F

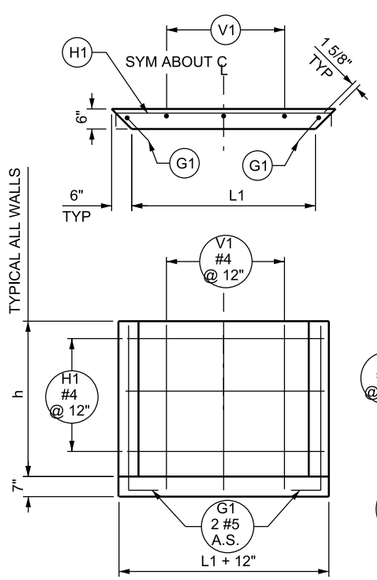

WALL R

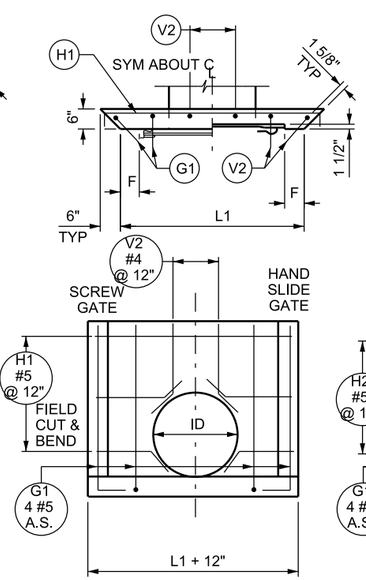

WALL S
SEE NOTE 4, PIPE ARCH SIMILAR

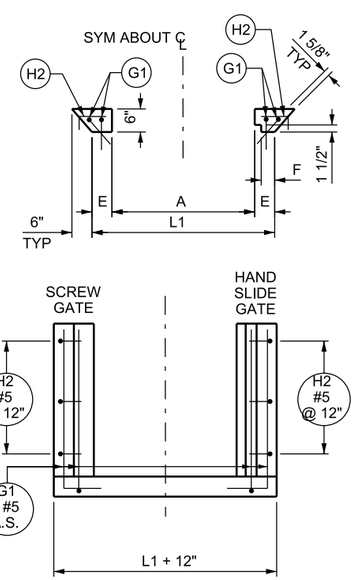

WALL T
SEE NOTE 4

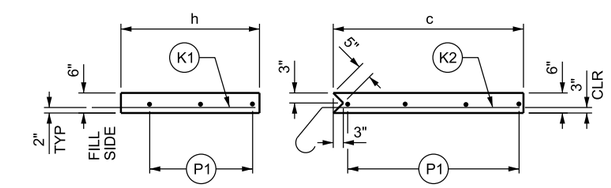

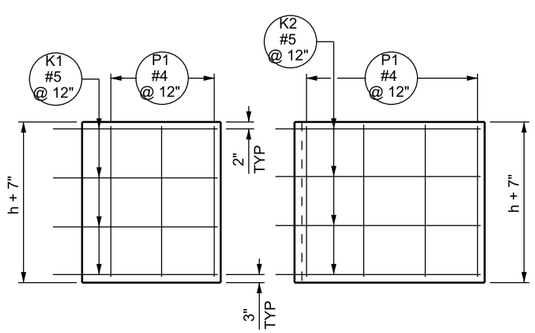

WINGWALL X
WINGWALL Y

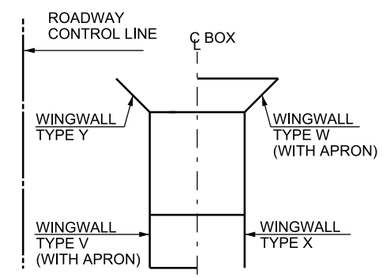

SCHEMATIC SKETCH
SEE ROADWAY PLAN AND PROFILE SHEET

NOTES:

1. REFERENCE DB SERIES STD DWGS.
2. INTERPRETATION OF SCHEMATIC SKETCH ON ROADWAY PLAN AND PROFILE SHEET TO INCLUDE:
   A. ORIENTATION OF DIVERSION BOX RELATIVE TO ROADWAY CONTROL LINE.
   B. TYPE OF WALL SPECIFIED FOR EACH BOX WITH ACCOMPANYING GATE AND CUT-OFF WALL REQUIREMENTS.
   C. HINGED LID REQUIREMENTS.
3. SEE STD DWG DB 2B FOR GENERAL NOTES.
4. BOTH "WALL S" AND "WALL T" HAVE THE OPTION OF HAND SLIDING GATE. MODIFY THE CONCRETE LISTED IN THE TABLES WHEN SELECTING THIS OPTION BY SUBTRACTING FROM THEM THE BLOCK-OUT AS DETERMINED BY THESE FORMULAS: "WALL T": 0.25h(E-F)/27; "WALL S": h(L1-2F)(0.125)/2T
5. USE LIDS ONLY IN APPLICATIONS THAT WILL NOT CARRY TRAFFIC.

NO.	DATE	APPR.	REMARKS

REVISIONS

UTAH DEPARTMENT OF TRANSPORTATION
STANDARD DRAWINGS FOR ROAD AND BRIDGE CONSTRUCTION
SALT LAKE CITY, UTAH

RECOMMENDED FOR APPROVAL — JAN.01, 2017 DATE
CHAIRMAN STANDARDS COMMITTEE APPROVED — JAN.01, 2017 DATE
DEPUTY DIRECTOR

STANDARD DIVERSION BOX W / INTERCHANGEABLE WALLS, BOTTOM SLAB, WALLS, AND APRON DETAILS
STANDARD DRAWING TITLE

STD. DWG. NO.
DB 2A

DGN File: L:\Standard_Drawings\Imperial\2017 Approved\1-All Drawings\DB02A.dgn
28-NOV-2016

DIVERSION BOX SIZES ARE BASED ON BOTH THE SCREW GATE FRAME SIZES AND THE DIAMETERS OF ROUND PIPE. THEY MAY BE USED WITH EITHER FLUMES, ARCH PIPES, OR ROUND PIPES.

WINGWALLS WITH ATTACHED APRON

TYPE W

γ = NO. OF SETS; CUT LINE; β = NO. OF BARS PER SET; AVG LGTH = $\frac{\propto + N}{2}$

PIPE	LINE NUMBER	DIMENSIONS IN INCHES	FLUME SIZE A x B: SCREW GATE	HAND SLIDE GATE	C	E	F	h	L 1	E1 ∝	E1 W	E1 γ	E1 β	E1 AVG LGTH	D2 ∝	D2 W	D2 γ	D2 β	D2 AVG LGTH	D1 LGTH	D1 NO	G1 θ	G1 LGTH	G1 NO	F1 LGTH	F1 NO	L1 LGTH	L1 NO	J1 LGTH	J1 NO	S1 LGTH	S1 NO	REINFORCING STEEL LB WITHOUT CUT-OFF WALL	REINFORCING STEEL LB WITH CUT-OFF WALL	CONCRETE CU/YD WITHOUT CUT-OFF WALL	CONCRETE CU/YD WITH CUT-OFF WALL
INSIDE DIAMETER	1	12		12 x 12	2'- 6	6"	3"	1'- 9	2'- 0	3'-3	5'- 5	1	2	4'- 4	1'- 1	0	2	1	1'- 1	2'- 7	2	1'- 11	3'- 1	6	2'- 8	4	2'- 0	4	2'-2	6	5'- 5	2	42.5	58.4	0.362	0.462
	2	18	18 x 18	18 x 18	3'- 2	6"	3"	2'- 3	2'- 6	3'-9	6'- 11		3	5'- 4	1'- 7	7"		2	1'- 1	3'- 1	3	2'- 5	3'- 7	8	3'- 4	6	2'- 9			9	5'- 11		70.4	92.7	0.577	0.690
	3	24	24 x 24	24 x 24	3'- 10	6"	3"	2'- 9	3'- 0	4'-3	8'- 5		3	6'- 4	2'- 1	1"- 1		2	1'- 7	3'- 7	3	2'- 11	4'- 1	10	4'- 0	6	3'- 5			9	8'- 5		91.9	116.2	0.832	0.979
	4	30	30 x 30		4'- 7	8"	5"	3'- 3	3'- 10	5'-2	10'- 4		4	7'- 9	2'- 7	7"		3	1'- 7	4'- 1	4	3'- 5	4'- 7	10	4'- 9	8	4'- 2			12	10'- 4		122.3	153.5	1.169	1.347
	5	36	36 x 36		5'- 4	8"	5"	3'- 9	4'- 4	5'-7	11'- 9		4	8'- 8	3'- 1	1'- 1		3	2'- 1	4'- 7	4	3'- 11	5'- 1	12	5'- 6	8	4'- 10			12	11'- 9		149.7	182.8	1.536	1.739
	6	42	42 x 42		6'- 0	8"	4"	4'- 3	4'- 10	6'-2	13'- 4		5	9'- 9	3'- 7	7"		4	2'- 1	5'- 1	5	4'- 5	5'- 7	14	6'- 2	10	5'- 6			15	13'- 4		198.1	255.4	1.934	2.166
	7	48	48 x 48		6'- 9	9"	5"	4'- 9	5'- 6	6'-9	14'- 11		5	10'- 10	4'- 1	1'- 1		4	2'- 7	5'- 7	6	4'- 11	6'- 1	16	6'- 11	10	6'- 3			16	14'- 11		236.8	279.9	2.414	2.674
SPAN x RISE	8	36 x 22	36 x 24	36 x 24	3'- 8	8"	5"	2'- 7	4'- 4	5'-7	9'- 5		3	7'- 6	1'- 11	11"		2	1'- 5	3'- 5	4	2'- 9	3'- 11	10	3'- 10	6	3'- 2			10	9'- 5		92.6	120.0	0.832	0.996
	9	43 x 27	48 x 30		4'- 3	8"	4"	3'- 0	5'- 4	6'-7	11'- 3		3	8'- 11	2'- 4	1'- 4		2	1'- 10	3'- 10	5	3'- 2	4'- 4	10	4'- 5	6	3'- 9			11	11'- 3		108.5	139.5	1.123	1.318
	10	50 x 31	60 x 36		4'- 9	9"	5"	3'- 4	6'- 6	7'-9	13'- 1		4	10'- 5	2'- 8	8"		3	1'- 8	4'- 2	7	3'- 6	4'- 8	12	4'- 11	8	4'- 3			15	13'- 1		150.0	189.2	1.417	1.645
	11	58 x 36	60 x 36		5'- 4	9"	5"	3'- 9	6'- 6	7'-9	13'- 11		4	10'- 10	3'- 1	1'- 1		3	2'- 1	4'- 7	7	3'- 11	5'- 1	12	5'- 6	8	4'- 10			15	13'- 11		164.7	205.0	1.709	1.952
	12	65 x 40	72 x 42		5'- 9	9"	5"	4'- 1	7'- 6	8'-9	15'- 7		5	12'- 2	3'- 5	5"		4	1'- 11	4'- 11	8	4'- 3	5'- 5	14	5'- 11	10	5'- 4			18	15'- 7		210.0	256.9	2.040	2.311
	13	72 x 44	72 x 48		6'- 3	9"	5"	4'- 5	7'- 6	8'-9	16'- 3	1	5	12'- 6	3'- 5	9"	2	4	2'- 3	5'- 3	8	4'- 7	5'- 9	14	6'- 5	10	5'- 9	4	2'-2	18	16'- 3	2	224.0	271.8	2.321	2.603

Note: on the drawing, the values in rows 1 and 13 of columns E1 γ, D2 γ, L1 NO, J1 LGTH and S1 NO are linked by arrows running through rows 2–12. Those cells are left empty here.

TYPE V

LINE NUMBER	G1 θ	G1 LGTH	G1 NO	L2 LGTH	L2 NO	D1 LGTH	D1 NO	M1 LGTH	M1 NO	F2 LGTH	F2 NO	J1 LGTH	J1 NO	S1 LGTH	S1 NO	REINFORCING STEEL LB WITHOUT CUT-OFF WALL	REINFORCING STEEL LB WITH CUT-OFF WALL	CONCRETE CU/YD WITHOUT CUT-OFF WALL	CONCRETE CU/YD WITH CUT-OFF WALL
1	1'- 11	3'- 1	6	1'- 5	4	2'- 7	2	2'- 8	3	2'- 7	4	2'-2	4	2'- 8	2	38.8	48.2	0.227	0.278
2	2'- 5	3'- 7	6	1'- 11		3'- 1	3	3'- 2	3	3'- 1	6		5	3'- 2		52.4	63.9	0.358	0.417
3	2'- 11	4'- 1	8	2'- 5		3'- 7	3	3'- 8	4	3'- 7	6		5	3'- 8		71.9	84.0	0.518	0.586
4	3'- 5	4'- 7	8	2'- 11		4'- 1	4	4'- 6	4	4'- 1	8		6	4'- 6		90.8	105.5	0.731	0.813
5	3'- 11	5'- 1	10	3'- 5		4'- 7	4	5'- 0	5	4'- 7	8		6	5'- 0		115.6	131.0	0.953	1.044
6	4'- 5	5'- 7	10	3'- 11		5'- 1	5	5'- 6	5	5'- 1	10		7	5'- 6		138.0	155.5	1.205	1.304
7	4'- 11	6'- 1	12	4'- 5		5'- 7	6	6'- 2	6	5'- 7	12		8	6'- 2		179.8	199.6	1.503	1.613
8	2'- 9	3'- 11	6	2'- 3		3'- 5	4	5'- 0	3	3'- 5	6		6	5'- 0		63.4	78.7	0.545	0.636
9	3'- 2	4'- 4	8	2'- 8		3'- 10	5	6'- 0	4	3'- 10	8		7	6'- 0		92.6	440.8	0.744	0.854
10	3'- 6	4'- 8	8	3'- 0		4'- 2	7	7'- 2	4	4'- 2	8		9	7'- 2		107.9	130.5	0.952	1.079
11	3'- 11	5'- 1	10	3'- 5		4'- 7	7	7'- 2	5	4'- 7	8		9	7'- 2		132.0	154.6	1.128	1.255
12	4'- 3	5'- 5	10	3'- 9		4'- 11	8	8'- 2	5	4'- 11	10		10	8'- 2		152.9	178.3	1.367	1.511
13	4'- 7	5'- 9	10	4'- 1	4	5'- 3	8	8'- 2	5	5'- 3	10	2'-2	10	8'- 2	2	161.3	186.7	1.534	1.678

Note: on the drawing, the values in rows 1 and 13 of columns L2 NO, J1 LGTH and S1 NO are linked by arrows running through rows 2–12. Those cells are left empty here.

DIVERSION BOX SIZES ARE BASED ON BOTH THE SCREW GATE FRAME SIZES AND THE DIAMETERS OF ROUND PIPE. THEY MAY BE USED WITH EITHER FLUMES, ARCH PIPES, OR ROUND PIPES.

WINGWALLS WITHOUT ATTACHED APRON

PIPE	LINE NUMBER	DIMENSIONS IN INCHES	FLUME SIZE A x B: SCREW GATE	HAND SLIDE GATE	C	E	F	h	L 1	WINGWALL X: K1 LGTH	K1 NO	P1 LGTH	P1 NO	REINFORCING STEEL LBS	CONCRETE CUBIC YARDS	WINGWALL Y: K2 T	K2 LGTH	K2 NO	P1 LGTH	P1 NO	REINFORCING STEEL LBS	CONCRETE CUBIC YARDS
INSIDE DIAMETER	1	12		12 x 12	2'- 6	6"	3"	1'- 9	2'- 0	2'- 7	3	1'- 11	3	11.9	0.076	2'- 9	3'- 10	3	1'- 11	3	15.8	0.103
	2	18	18 x 18	18 x 18	3'- 2	6"	3"	2'- 3	2'- 6	3'- 1	3	2'- 5	3	14.5	0.118	3'- 5	4'- 6	3	2'- 5	4	20.5	0.160
	3	24	24 x 24	24 x 24	3'- 10	6"	3"	2'- 9	3'- 0	3'- 7	4	2'- 11	4	22.7	0.170	4'- 1	5'- 2	4	2'- 11	4	29.3	0.229
	4	30	30 x 30		4'- 7	8"	5"	3'- 3	3'- 10	4'- 1	4	3'- 5	4	26.2	0.231	4'- 10	5'- 11	4	3'- 5	5	36.1	0.317
	5	36	36 x 36		5'- 4	8"	5"	3'- 9	4'- 4	4'- 7	5	3'- 11	5	37.0	0.301	5'- 7	6'- 8	5	3'- 11	6	50.5	0.418
	6	42	42 x 42		6'- 0	8"	4"	4'- 3	4'- 10	5'- 1	5	4'- 5	5	41.3	0.380	6'- 3	7'- 4	5	4'- 5	6	55.9	0.526
	7	48	48 x 48		6'- 9	9"	5"	4'- 9	5'- 6	5'- 7	6	4'- 11	6	54.6	0.469	7'- 0	8'- 1	6	4'- 11	7	13.6	0.654
SPAN x RISE	8	36 x 22	36 x 24	36 x 24	3'- 8	8"	5"	2'- 7	4'- 4	3'- 5	3	2'- 9	3	16.2	0.152	3'- 11	5'- 0	3	2'- 9	4	23.0	0.208
	9	43 x 27	48 x 30		4'- 3	8"	4"	3'- 0	5'- 4	3'- 10	4	3'- 2	4	24.5	0.199	4'- 6	5'- 7	4	3'- 2	5	33.9	0.274
	10	50 x 31	60 x 36		4'- 9	9"	5"	3'- 4	6'- 6	4'- 2	4	3'- 6	4	26.7	0.242	5'- 0	6'- 1	4	3'- 6	5	36.8	0.336
	11	58 x 36	60 x 36		5'- 4	9"	5"	3'- 9	6'- 6	4'- 7	5	3'- 11	5	37.0	0.301	5'- 7	6'- 8	5	3'- 11	6	50.5	0.418
	12	65 x 40	72 x 42		5'- 9	9"	5"	4'- 1	7'- 6	4'- 11	5	4'- 3	5	39.8	0.353	6'- 0	7'- 1	5	4'- 3	6	54.0	0.486
	13	72 x 44	72 x 48		6'- 3	9"	5"	4'- 5	7'- 6	5'- 3	5	4'- 7	5	42.7	0.409	6'- 6	7'- 7	5	4'- 7	7	60.5	0.56

WALL TYPES

LINE NUMBER	WALL R: G1 θ	G1 LGTH	G1 NO	H1 I	H1 LGTH	H1 NO	V1 LGTH	V1 NO	REINFORCING STEEL LBS	CONCRETE CUBIC YARDS	WALL S: G1 θ	G1 LGTH	G1 NO	H1 I	H1 LGTH	H1 NO	V2 LGTH	V2 NO	REINFORCING STEEL LBS	CONCRETE CUBIC YARDS
1	1'- 11	3'- 1	2	2'- 8	4'- 4	2	1'- 11	2	18.0	0.081	1'- 11	3'- 1	4	2'- 8	4'- 4	2	1'- 5	1	22.8	0.067
2	2'- 5	3'- 7		3'- 2	4'- 10	3	2'- 5	2	25.8	0.125	2'- 5	3'- 7		3'- 2	4'- 10	3	1'- 8	1	31.2	0.092
3	2'- 11	4'- 1		3'- 8	5- 4	3	2'- 11	3	31.1	0.179	2'- 11	4'- 1		3'- 8	5'- 4	3	1'- 11	1	35.0	0.120
4	3'- 5	4'- 7		4'- 6	6'- 2	4	3'- 5	4	44.4	0.262	3'- 5	4'- 7		4'- 6	6'- 2	4	2'- 2	2	47.7	0.170
5	3'- 11	5'- 1		5'- 0	6'- 8	4	3'- 11	4	48.9	0.337	3'- 11	5'- 1		5'- 0	6'- 8	4	2'- 5	3	53.9	0.205
6	4'- 5	5'- 7		5'- 6	7'- 2	5	4'- 5	5	63.8	0.422	4'- 5	5'- 7		5'- 6	7'- 2	5	2'- 8	3	66.0	0.242
7	4'- 11	6'- 1		6'- 2	7'- 10	5	4'- 11	5	70.0	0.530	4'- 11	6'- 1		6'- 2	7'- 10	5	2'- 11	4	74.0	0.296
8	2'- 9	3'- 11		5'- 0	6'- 8	3	2'- 9	4	36.4	0.232	2'- 9	3'- 11		5'- 0	6'- 8	3	1'- 10	3	40.9	0.150
9	3'- 2	4'- 4		6'- 0	7'- 8	3	3'- 2	5	43.6	0.326	3'- 2	4'- 4		6'- 0	7'- 6	3	2'- 1	5	48.5	0.206
10	3'- 6	4'- 8		7'- 2	8'- 10	4	3'- 6	6	60.6	0.343	3'- 6	4'- 8		7'- 2	8'- 10	4	2'- 4	5	64.1	0.271
11	3'- 11	5'- 1		7'- 2	8'- 10	4	3'- 11	6	63.2	0.488	3'- 11	5'- 1		7'- 2	8'- 10	4	2'- 5	5	66.1	0.275
12	4'- 3	5'- 5		8'- 2	9'- 10	4	4'- 3	7	72.2	0.608	4'- 3	5'- 5		8'- 2	9'- 10	4	2'- 7	6	74.0	0.340
13	4'- 7	5'- 9	2	8'- 2	9'- 10	5	4'- 7	7	84.7	0.657	4'- 7	5'- 9	4	8'- 2	9'- 10	5	2'- 9	6	86.3	0.328

LINE NUMBER	WALL T: G1 θ	G1 LGTH	G1 NO	H2 θ	H2 LGTH	H2 NO	REINFORCING STEEL LBS	CONCRETE CUBIC YARDS	BOTTOM SLAB: M1 LGTH	M1 NO	REINFORCING STEEL LBS	CONCRETE CUBIC YARDS
1	1'- 11	3'- 1	4	10	1'-8	4	17.3	0.049	2'- 8	8	14.3	0.194
2	2'- 5	3'- 7				6	21.6	0.063	3'- 2	8	16.9	0.265
3	2'- 11	4'- 1				6	23.7	0.076	3'- 8	10	24.5	0.346
4	3'- 5	4'- 7				8	28.0	0.110	4'- 6	12	36.1	0.505
5	3'- 11	5'- 1				8	30.1	0.127	5'- 0	12	40.1	0.614
6	4'- 5	5'- 7				10	34.4	0.144	5'- 6	14	51.4	0.735
7	4'- 11	6'- 1				10	36.5	0.176	6'- 2	14	57.7	0.913
8	2'- 9	3'- 11				6	23.0	0.088	5'- 0	12	40.1	0.614
9	3'- 2	4'- 4				6	24.8	0.102	6'- 0	16	64.1	0.867
10	3'- 6	4'- 8				8	28.4	0.124	7'- 2	16	76.6	1.215
11	3'- 11	5'- 1				8	30.1	0.139	7'- 2	16	76.6	1.215
12	4'- 3	5'- 5				8	31.5	0.151	8'- 2	18	98.2	1.561
13	4'- 7	5'- 9	4	10	1'-8	10	35.1	0.164	8'- 2	18	98.2	1.561

Note: on the drawing, the values in rows 1 and 13 of columns Wall R G1 NO, Wall S G1 NO, Wall T G1 NO, H2 θ and H2 LGTH are linked by arrows running through rows 2–12. Those cells are left empty here.

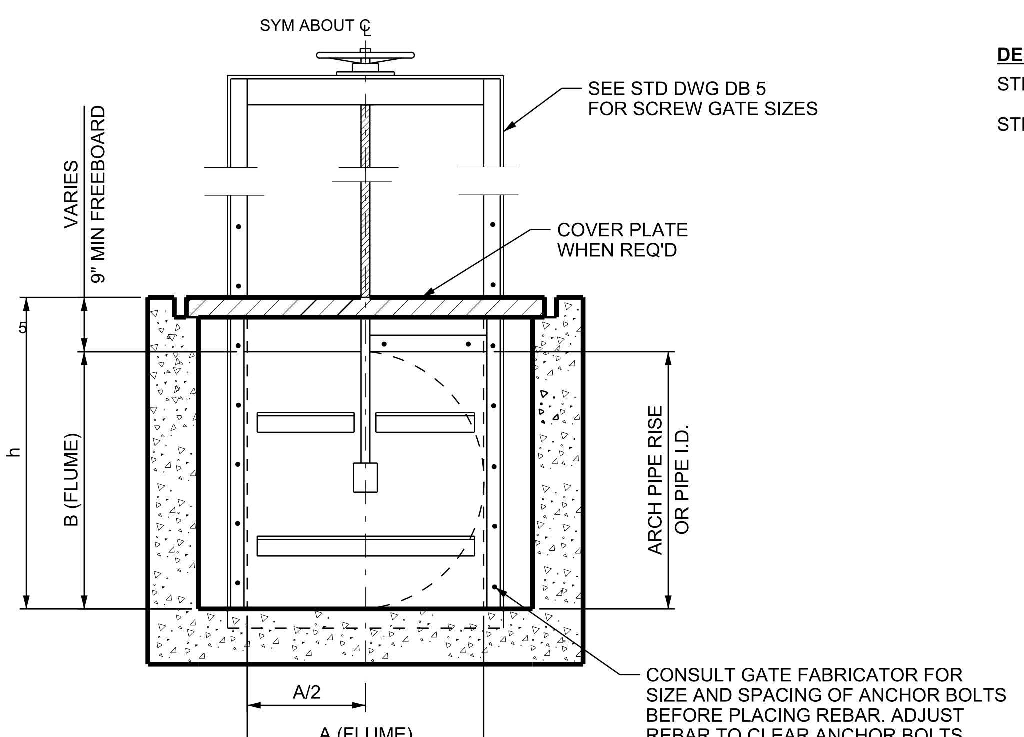

SCREW GATE INSTALLATION DIAGRAM

DESIGN DATA

STRUCTURAL STEEL: Fy = 36,000 psi

STRUCTURAL CONCRETE: f ' c = 4,000 psi; fy = 60,000 psi; n = 8

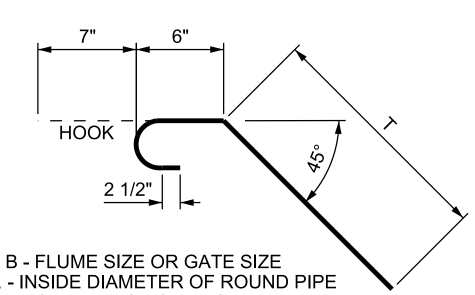

A x B - FLUME SIZE OR GATE SIZE
I.D. - INSIDE DIAMETER OF ROUND PIPE
S x R - SPAN x RISE OF ARCH PIPE

180° STANDARD HOOK

GENERAL NOTES:

1. REFERENCE DB SERIES STD DWGS.
2. USE COATED DEFORMED-CARBON REINFORCING STEEL BARS CONFORMING TO AASHTO M 284 OR M 111 AND M 31 GRADE 60 RESPECTIVELY.
3. FIELD CUT AND BEND REINFORCING STEEL AS NECESSARY TO CLEAR PIPES AND MAINTAIN 2 INCH COVER. REPAIR ANY DAMAGE OR CUTS TO THE COATING ON REINFORCING BARS.
4. USE CLASS AA (AE) CONCRETE.
5. USE TYPE II CEMENT (LOW ALKALI).
6. PROVIDE 2 INCH CONCRETE COVER TO REINFORCING STEEL.
7. PROVIDE 3/4 INCH CHAMFER ON ALL EXPOSED CONCRETE CORNERS.
8. REFER TO EACH FULL LINE IN TABLE FOR QUANTITIES FOR ONE WALL OR SLAB OF THE TYPE SPECIFIED. USE THIS DRAWING IN CONJUNCTION WITH THE ROADWAY PLAN AND PROFILE, AND ROADWAY SUMMARY SCHEDULE TO DETERMINE THE SPECIFICS CONCERNING EACH DIVERSION BOX.

NOTES:

1. SEE STD DWG DB 4 FOR TRANSITION STRUCTURE FROM DIVERSION BOX TO TRAPEZOIDAL SHAPED CHANNEL WITH BOTTOM WIDTH OF 1 FT-0 INCH.
2. ALL DIMENSIONS ARE ROUNDED TO THE NEAREST WHOLE INCH. THOSE DIMENSIONS SHOWN FOR REBAR ARE OUT-TO-OUT OF BAR.
3. USE "∝" AND "W" DIMENSIONS NOT AVERAGE LENGTH OF REBAR WHEN LAYING-OUT SET REBAR.
4. USE STANDARD 180 DEGREE HOOK FOR K2 BAR AS NOTED.
5. USE #5 REBARS FOR K1, K2, G1 AND H1 MARK NUMBERS. ALL REMAINING MARK NUMBERS ARE #4 REBARS.
6. SAME SIZE BOX IS REQUIRED FOR BOTH METAL PIPE AND CONCRETE PIPE.

REVISIONS | NO. | DATE | APPR. | REMARKS

UTAH DEPARTMENT OF TRANSPORTATION
STANDARD DRAWINGS FOR ROAD AND BRIDGE CONSTRUCTION
SALT LAKE CITY, UTAH

RECOMMENDED FOR APPROVAL: CHAIRMAN STANDARDS COMMITTEE — JAN. 01, 2017 DATE
APPROVED: DEPUTY DIRECTOR — JAN. 01, 2017 DATE

STANDARD DIVERSION BOX W / INTERCHANGEABLE WALLS, QUANTITIES SCHEDULE
STANDARD DRAWING TITLE

STD. DWG. NO.
DB 2B

DGN File: L:\Standard_Drawings\Imperial\2017 Approved\1-All Drawings\DB02B.dgn
28-NOV-2016

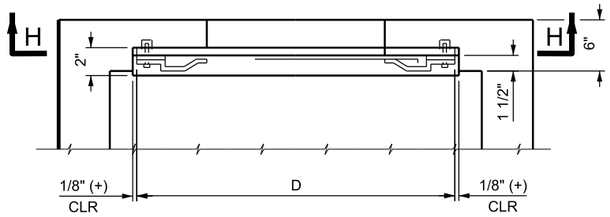

PARTIAL PLAN
TYPE Ga

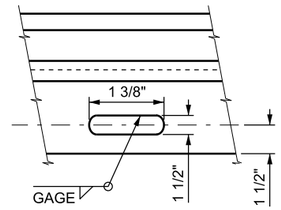

DETAIL A

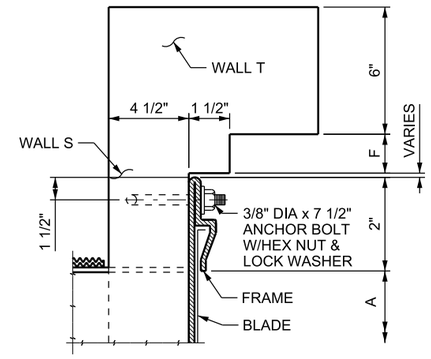

SECTION L-L

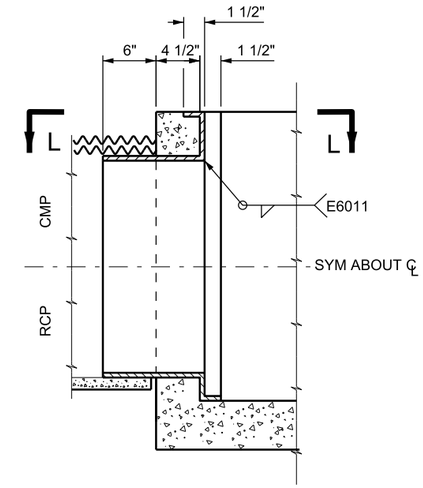

SECTION G-G

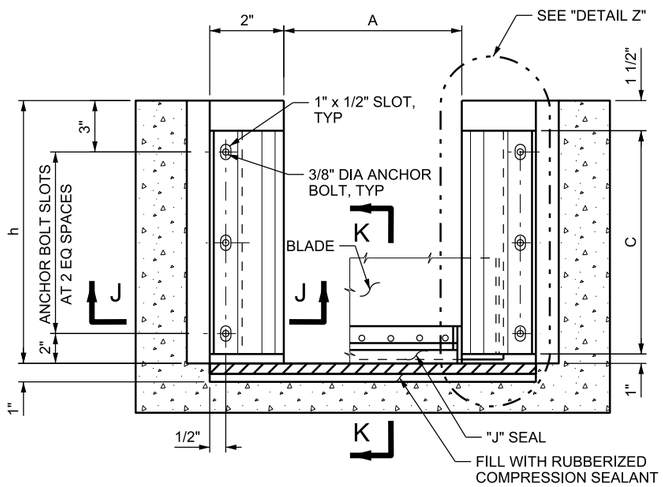

SECTION H-H
REQUIRED WITH FLUME

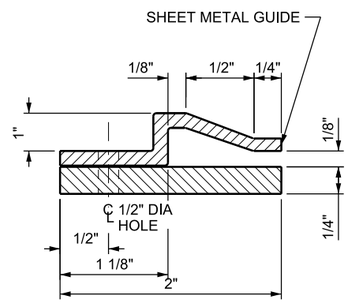

SECTION J-J

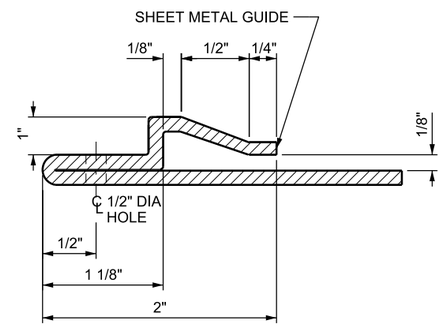

SECTION M-M

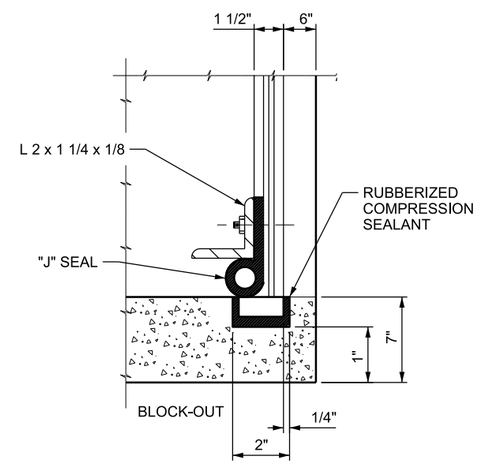

SECTION K-K

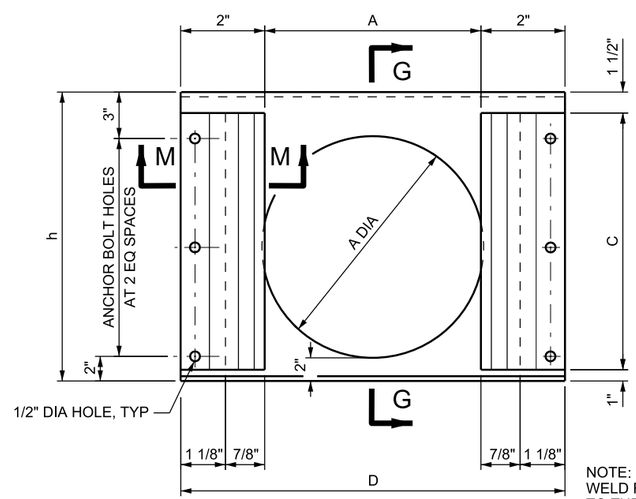

TYPE Ga
REQ'D WITH PIPE
ROUND PIPE SHOWN, ARCH PIPE SIMILAR

NOTE:
WELD FRAME WATER-TIGHT TO THE END OF THE METAL PIPE. GAGE OF METAL PIPE IS THE SAME AS THE GAGE OF THE FRAME.

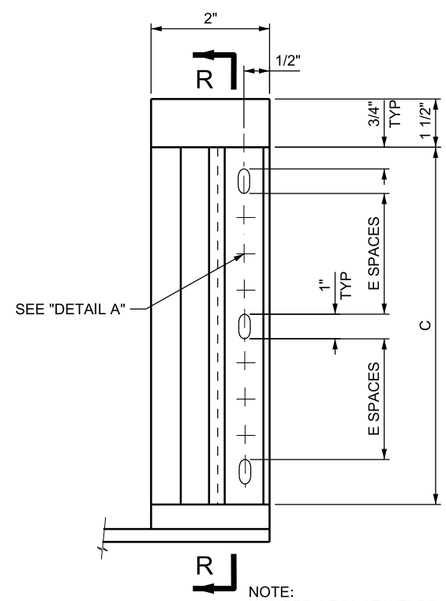

NOTE:
NUMBER OF SLOT WELDS IS ONE LESS THAN THE NUMBER OF E SPACES.

DETAIL Z

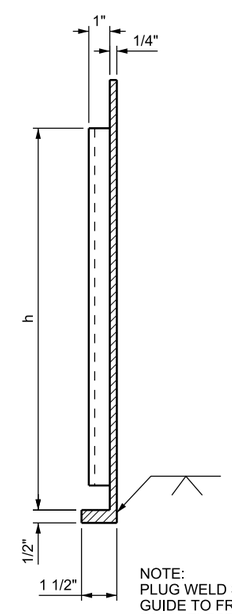

NOTE:
PLUG WELD SHEET METAL GUIDE TO FRAME. USE E6011 ELECTRODE.

SECTION R-R

DESIGN DATA

STRUCTURAL STEEL: Fy = 36,000 psi

STRUCTURAL CONCRETE: f ' c = 4,000 psi; fy = 60,000 psi; n = 8

GENERAL NOTES

1. REFERENCE DB SERIES STD DWGS.
2. ALL BOLTS: A 307 BOLTS UNLESS OTHERWISE INDICATED.
3. GALVANIZED FASTENERS: CONFORM TO ASTM STANDARDS A 307 AND A 164.

NOTES:

1 INSTALL SHEET METAL FRAME PERPENDICULAR TO THE FLOOR OF THE BOX PRIOR TO CASTING THE WALLS. BE CAREFUL NOT TO SCAR OR OTHERWISE DAMAGE THE FAYING SURFACES BETWEEN THE BLADE AND THE FRONT FACE OF THE FRAME SO THAT FRAME REMAINS WATER-TIGHT WHEN CLOSED.

2. FABRICATE THE BLADE AND FRAME OF ZINC COATED STEEL. CONFORM TO AASHTO M 218.

REVISIONS				
NO.	DATE	APPR.		REMARKS

UTAH DEPARTMENT OF TRANSPORTATION
STANDARD DRAWINGS FOR ROAD AND BRIDGE CONSTRUCTION
SALT LAKE CITY, UTAH

RECOMMENDED FOR APPROVAL — JAN.01, 2017 DATE
CHAIRMAN STANDARDS COMMITTEE APPROVED — JAN.01, 2017 DATE
DEPUTY DIRECTOR

STANDARD DIVERSION BOX W / INTERCHANGEABLE WALLS, HAND SLIDE GATE DETAILS
STANDARD DRAWING TITLE

STD. DWG. NO.
DB 2C

DGN File:L:\Standard_Drawings\Imperial\2017 Approved\1-All Drawings\DB02C.dgn
28-NOV-2016

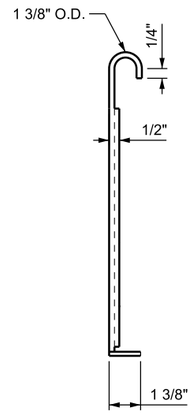

SECTION THRU PIPE OR PIPE ARCH BLADE

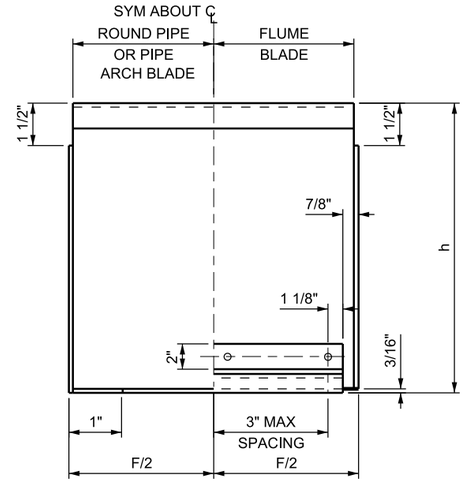

HAND SLIDE GATE BLADE

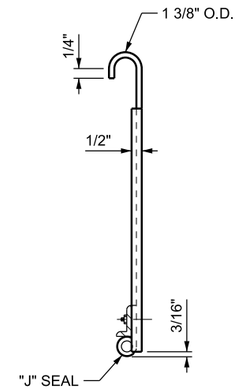

SECTION THRU FLUME BLADE

DIMENSION SCHEDULE														
GATE SIZE		FLUME							PIPE OR PIPE ARCH					
A	B	FRAME		GUIDE			BLADE		SHEET METAL FRAME				BLADE	
		D	h	C	GA	E	F	GA	A	h	D	GA	F	GA
12"	12"	1'- 4¼"	1'- 9	1'- 6 ½"	16	2	1'- 1 ½"	16	12"	1'- 9	1'- 4 ¼"	16	1'- 1 ½"	16
18"	18"	1'- 10¼"	2'- 3	2'- 0 ½"	14	3	1'- 7 ½"	14	18"	2'- 3	1'- 10 ¼"	14	1'- 7 ½"	14
24"	24"	2'- 4¼"	2'- 9	2'- 6 ½"	10	4	2'- 1 ½"	10	24"	2'- 9	2'- 4 ¼"	10	2'- 1 ½"	10
36"	24"	3'- 5¼"	2'- 7	2'- 4 ½"	10	4	3'- 1 ½"	8	36"	2'- 7	3'- 5 ¼"	10	3'- 1 ½"	8

NOTES

1. REFERENCE DB SERIES STD DWGS.
2. USE STRUCTURAL CARBON FOR ALL BAR AND ANGLE STEEL CONFORMING TO AASHTO DESIGNATION M 270, GRADE 36. HOT-DIP GALVANIZE AFTER FABRICATION IN ACCORDANCE WITH AASHTO DESIGNATION M 111.
3. FABRICATE GUIDES, BLADES, AND SHEET METAL FRAMES OF HAND SLIDE GATES OF ZINC COATED STEEL CONFORMING TO THE REQUIREMENTS OF SPECIFICATION ASTM A 653.
4. "J" SEALS: MOLDED OR EXTRUDED NEOPRENE OR EPDM (ETHYLENE PROPYLENE) OF PROPER LENGTH, CURED TO ENSURE A DENSE HOMOGENEOUS CROSS SECTION FREE FROM PITTING, BLISTERS OR POROSITY, MEETING THE FOLLOWING SPECIFICATIONS WHEN TESTED IN ACCORDANCE WITH APPLICABLE PROVISIONS OF ASTM D 412, D 471, D 2240 AND D 395.

   SHORE A DUROMETER HARDNESS: 60 ± 5

	NEOPRENE	EPDM
MINIMUM ELONGATION:	450%	35%
ULTIMATE TENSILE STRENGTH:	2,500 psi	2,000 psi
COMPRESSION SET (MAX):	30%	25%

   BOTH MATERIALS
   ABSORPTION (2 DAYS): 5% BY WEIGHT
   TENSILE STRENGTH (48 HOURS IN OXYGEN 8 PERCENT OF BEGINNING STRENGTH @ 70°C AND 300 psi PRESSURE)
   ACCURATELY LOCATE AND DRILL ALL HOLES IN SEAL WITH 1/8 INCH OVERSIZE HOLLOW CORE DRILL.
5. COMPRESSION SEALANT: 1 1#2 INCH DIA., TOP GRADE BUTYL RUBBER OF DENSE, HIGHLY COMPRESSIBLE, STABLE MATERIAL WITH GOOD SAG AND ADHESION PROPERTIES PRODUCED FROM BLENDS OF REFINED HYDROCARBON RESINS AND PLASTICIZING COMPOUNDS, REINFORCED WITH INERT MINERAL FILLERS CONTAINING NO SOLVENTS, IRRITATING FUMES OR OBNOXIOUS ODORS NOT DEPENDENT ON OXIDIZING, EVAPORATING OR CHEMICAL ACTION FOR ADHESIVE OR COHESIVE STRENGTH HAVING THE FOLLOWING PROPERTIES:

CHEMICAL COMPOSITION COMPONENTS	MIN	MAX	ASTM SPEC
BITUMEN (HYDROCARBON PLASTIC CONTAIN) % BY WEIGHT:	50	70	D4,D140
INERT MINERAL FILLER % BY WEIGHT	30	50	D545
VOLATILE MATTER % BY WEIGHT	2.0		D6

PHYSICAL PROPERTIES	REQUIRED	
SPECIFIC GRAVITY @ 77°F (25°C)	1.20 TO 1.35	D7
DUCTILITY @ 77°F 25°C MIN	5.0 c. m.	D113
SOFTENING POINT @ 77°F MIN	320°F	D36
FLASH POINT c.o.c. MIN	600°F	D92
FIRE POINT c.o.c. MIN	625°F	D92
PENETRATION		
77°F (25°C) 150 gs. 5 sec	50 to 120	D217

   TESTS

   REJECT IF ONE OR MORE TEST SPECIMENS, OF THE LOT REPRESENTING THE SPECIMEN, FAIL TO MEET ASTM REQUIREMENTS
6. BOTH FRAMES CAN BE USED WITH TYPE "G" HAND SLIDE GATES. SPECIFY WHETHER TYPE Ga OR Gb FRAME IS REQUIRED. SEE STD DWG DB 2C FOR FRAME TYPES. NORMALLY THE NUMBER OF GATES EQUAL THE NUMBER OF OPENINGS LESS ONE.
7. THE RUBBER SEAL FOR FLUSH BOTTOM CLOSURE: CONFORM TO ASTM D 2000.
8. MAKE FLUSH WITH FLOOR OF BOX TOP OR BAR SILL AFTER FRAME HAS BEEN PROPERLY PLUMBED AND LEVELED. GROUT FRAME IN PLACE WITH A CEMENT GROUT.

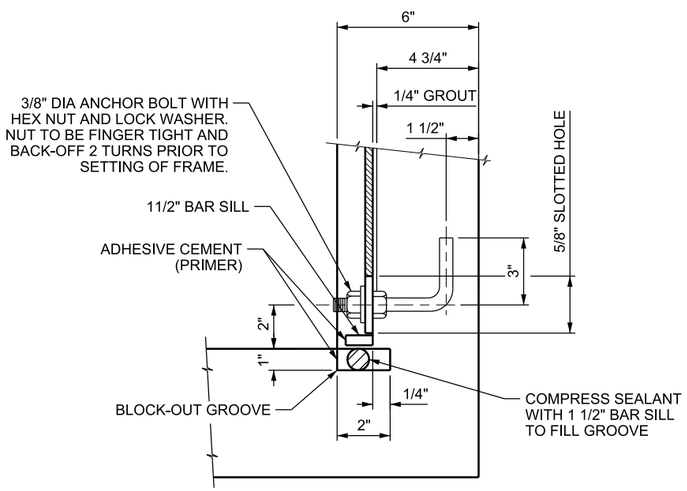

INSTALLATION SKETCH A

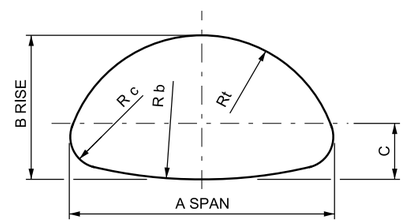

PIPE-ARCH DIMENSIONS					
SPAN	RISE	LAYOUT DIMENSIONS			
		C	Rc	Rt	Rb
36"	22"	6 1/4"	5"	18 1/4"	73 1/4"

NOTE:
PIPE-ARCH LAYOUT IN SHEET METAL FRAME TO CONFORM TO THESE DIMENSIONS.

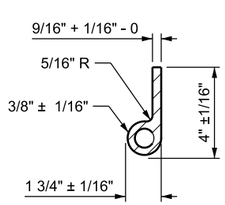

"J" SEAL

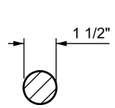

COMPRESSION SEALANT

FLEXIBLE JOINT SEALANT TYP CROSS-SECTION

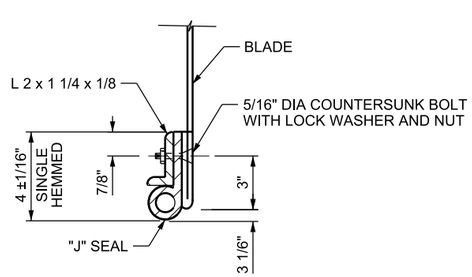

PARTIAL SECTION THRU FLUME BLADE

REVISIONS

NO.	DATE	APPR.	REMARKS

UTAH DEPARTMENT OF TRANSPORTATION
STANDARD DRAWINGS FOR ROAD AND BRIDGE CONSTRUCTION
SALT LAKE CITY, UTAH

RECOMMENDED FOR APPROVAL — JAN.01.2017 DATE
CHAIRMAN STANDARDS COMMITTEE APPROVED — JAN.01.2017 DATE
DEPUTY DIRECTOR

STANDARD DIVERSION BOX
TYPE G
HAND SLIDE GATE
DETAILS

STANDARD DRAWING TITLE

STD. DWG. NO.
DB 2D

DGN File: L:\Standard Drawings\Imperial\2017 Approved\1-All Drawings\DB020.dgn
28-NOV-2016

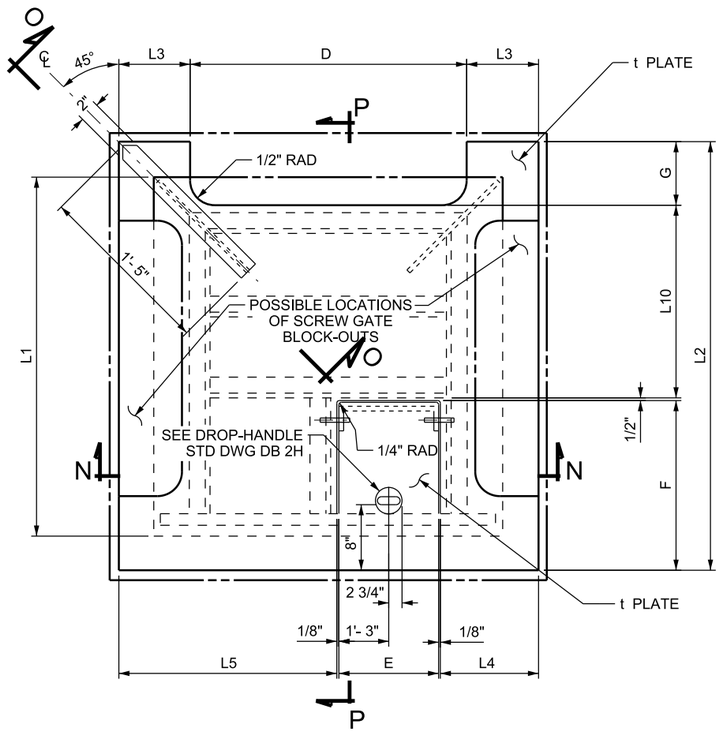

SOLID COVER TYPE A PLAN

SOLID COVER TYPE A, SUB-FRAME TYPE I DIMENSIONS																						
LINE NO.	SCREW GATE		WALL SIZE	BLOCK-OUT		HINGED LID			COVER PLATE					SUB-FRAME TYPE I								
	A	B	L1	D	G	E	F	t	I 2	t	L 3	L 4	L 5	L 6	L 7	L 8	L 9	L10	L11	L12
1	36	36	4'- 4"	3'- 5 1/4"	8 1/2"	2'-6	3'- 4 5/8"	1/4"	5' 3"	1/4"	10 7/8"	1'- 0"	1'- 8 3/4"	6 1/2"	8"	9 3/4"	9 3/16"	1'- 1 3/8"	4'- 3 1/2"	3'- 3"
2	42	42	4'- 10"	4'- 0 1/2"	9 1/2"			1/4"	5'- 9"	1/4"	10 1/4"	1'- 1"	2'- 1 3/4"	7 1/2"	1'- 0"	1'- 2 3/4"	10 5/8"	1'- 6 3/8"	4'- 9 1/2"	3'- 7"
3	48	48	5'- 6"	4'- 7 1/2"	9 1/2"			1/4"	6'- 5"	1/4"	10 3/4"	1'- 1"	2'- 9 3/4"	7 1/2"	1'- 8"	1'- 10 3/4"	10 5/8"	2'- 2 3/8"	5'- 5 1/2"	4'- 3"
4	36	24	4'- 4"	3'- 5 1/4"	8 1/2"			1/4"	5'-3"	1/4"	10 7/8"	1'- 0"	1'- 8 3/4"	6 1/2"	8"	9 3/4"	9 3/16"	1'- 1 3/8"	4'- 3 1/2"	3'- 3"
5	48	30	5'- 4"	4'- 6 1/4"	9 1/2"			1/4"	6'- 3"	1/4"	10 3/8"	1'- 1"	2'- 7 3/4"	7 1/2"	1'- 6"	1'- 8 3/4"	10 5/8"	2'- 0 3/8"	5'- 3 1/2"	4'-1"
6	60	36	6'- 6"	5'- 7 1/4"	9 1/2"			3/8"	7'- 5"	3/8"	10 7/8"	1'- 1"	3'- 9 3/4"	7 1/2"	2'- 8"	2'- 10 3/4"	10 5/8"	3'- 2 3/8"	6'- 5 1/2"	5'- 3"
7	72	42	7'- 6"	6'- 7 1/4"	9 1/2"			3/8"	8'- 5"	3/8"	10 7/8"	1'- 1"	4'- 9 3/4"	7 1/2"	3'- 8"	3'- 10 3/4"	10 5/8"	4'- 2 3/8"	7'- 5 1/2"	6'- 3"
8	72	48	7'- 6"	6'- 7 1/4"	9 1/2"	2'-6	3'- 4 5/8"	3/8"	8'- 5"	3/8"	10 7/8"	1'- 1"	4'- 9 3/4"	7 1/2"	3'- 8"	3'- 10 3/4"	10 5/8"	4'- 2 3/8"	7'- 5 1/2"	6'- 3"

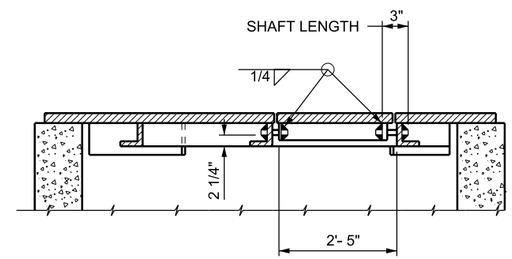

SECTION N-N

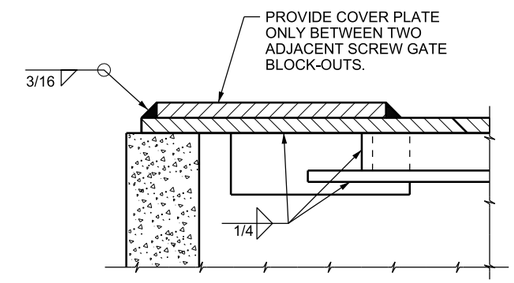

SECTION O-O

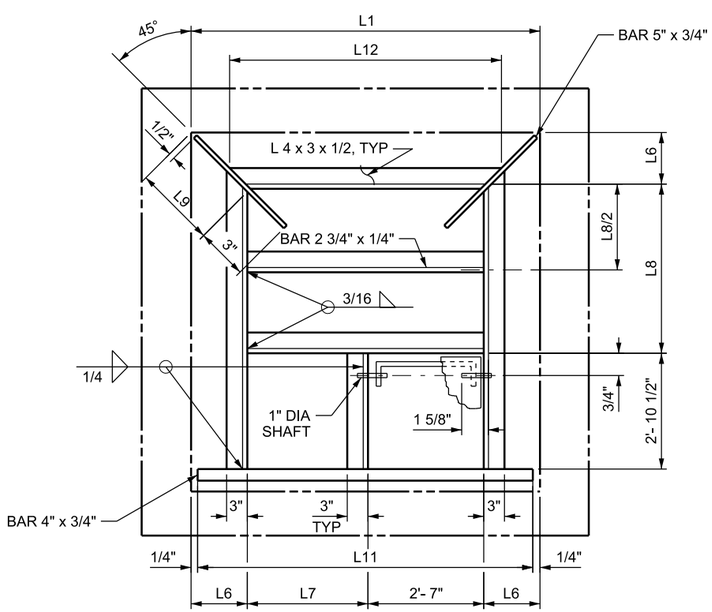

SUB-FRAME TYPE I PLAN

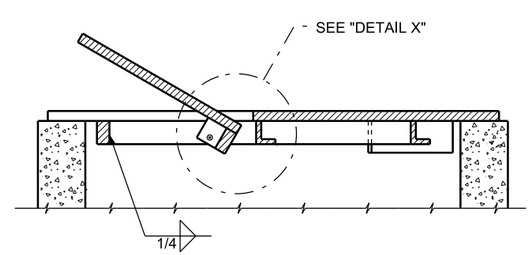

SECTION P-P

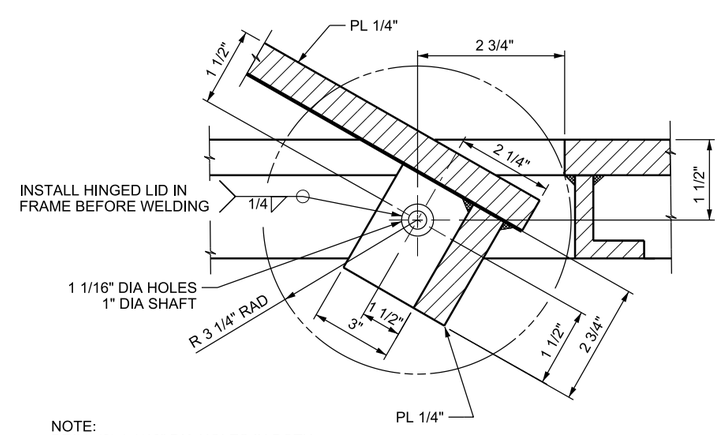

NOTE:
DRILL (2) 1 1/16" DIA HOLES IN BOTH
SUB-FRAME AND HINGED LID.

DETAIL X

NOTES

1. REFERENCE DB SERIES STD DWGS.
2. USE HINGED LID (SOLID COVER PLATE) ONLY IN APPLICATIONS THAT WILL NOT CARRY TRAFFIC.

REVISIONS

NO.	DATE	APPR.	REMARKS

UTAH DEPARTMENT OF TRANSPORTATION
STANDARD DRAWINGS FOR ROAD AND BRIDGE CONSTRUCTION
SALT LAKE CITY, UTAH

RECOMMENDED FOR APPROVAL — JAN.01.2017 DATE
CHAIRMAN STANDARDS COMMITTEE APPROVED — JAN.01.2017 DATE
DEPUTY DIRECTOR

STANDARD DIVERSION BOX
HINGED LID
(SOLID COVER PLATE)
TYPE A DETAILS
TYPE I PLAN

STANDARD DRAWING TITLE

STD. DWG. NO.
DB 2E

DGN File: L:\Standard Drawings\Imperial\2017 Approved\1-All Drawings\DB02E.dgn
28-NOV-2016

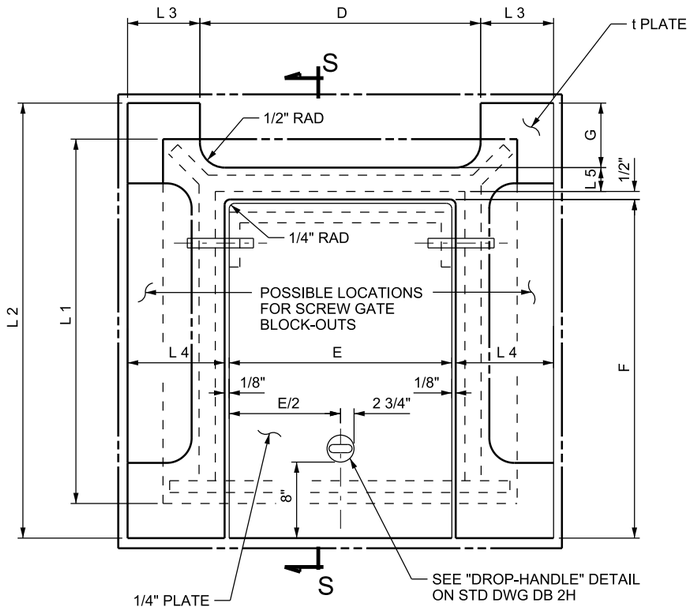

SOLID COVER TYPE A PLAN

SOLID COVER TYPE A, SUB-FRAME TYPE II DIMENSIONS																			
LINE	SCREW GATE		WALL SIZE	BLOCK-OUT		HINGED LID			COVER PLATE					SUB-FRAME TYPE II					
NO.	A	B	L1	D	G	E	F	t	L2	t	L3	L4	L5	L6	L7	L8	L9	L10
1	18	18	2'- 6"	1'- 10 ¼"	8 ½"	1'- 8 ¼"	2'- 6 ½"	¼"	3'- 5"	¼"	9 ⅜"	10 ¼"	1 ½"	2'- 5 ½"	4 ¾"	2'- 0 ½"	4 ¼"	1'- 11 ½"
2	24	24	3'- 0"	2'- 4 ¼"	8 ½"	2'- 2 ½"	3'- 0 ½"	¼"	3'- 11"	¼"	9 ⅜"	10 ¼"	1 ½"	2'- 11 ½"	4 ¾"	2'- 6 ¼"	4 ¼"	2'- 5 ⅛"
3	30	30	3'- 10"	2'- 11 ¼"	8 ½"	2'- 6"	3'- 10 ½"	¼"	4'- 9"	¼"	10 ⅞"	1'- 1 ⅜"	1 ½"	3'- 9 ½"	7 ⅞"	3'- 4 ¼"	4 ¼"	3'- 3 ⅛"

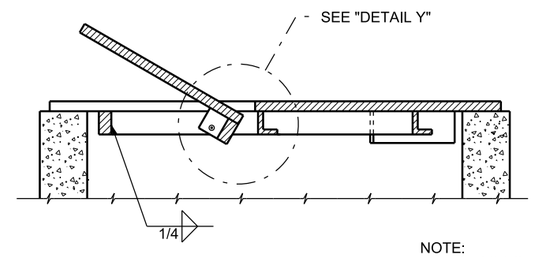

NOTE:
USE BAR 3 1/2" x 1/2" FOR ALL MEMBERS
OF SUB-FRAME EXCEPT AS NOTED.

SECTION S-S

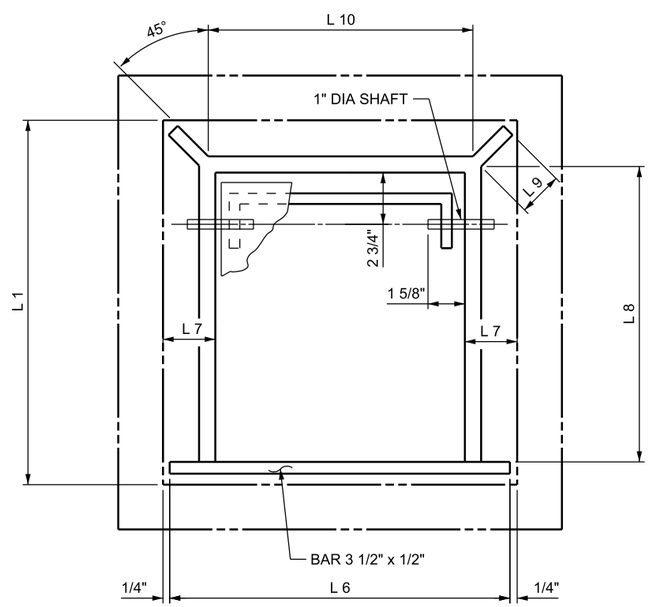

SUB-FRAME TYPE II PLAN

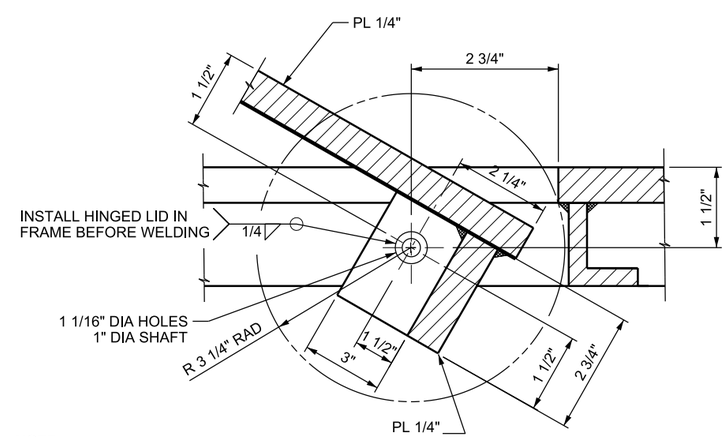

NOTE:
DRILL (2) 1 1/16" DIA HOLES IN BOTH
SUB-FRAME AND HINGED LID.

DETAIL Y

NOTES:

1. REFERENCE DB SERIES STD DWGS.
2. USE HINGED LID (SOLID COVER PLATE) ONLY IN APPLICATIONS THAT WILL NOT CARRY TRAFFIC.

REVISIONS

NO.	DATE	APPR.	REMARKS

UTAH DEPARTMENT OF TRANSPORTATION
STANDARD DRAWINGS FOR ROAD AND BRIDGE CONSTRUCTION
SALT LAKE CITY, UTAH

RECOMMENDED FOR APPROVAL — JAN.01.2017 DATE
CHAIRMAN STANDARDS COMMITTEE APPROVED — JAN.01.2017 DATE
DEPUTY DIRECTOR

STANDARD DIVERSION BOX
HINGED LID
(SOLID COVER PLATE)
TYPE A DETAILS
TYPE II PLAN

STANDARD DRAWING TITLE

STD. DWG. NO.
DB 2F

DGN File:L:\Standard Drawings\Imperial\2017 Approved\1-All Drawings\DB02F.dgn
28-NOV-2016

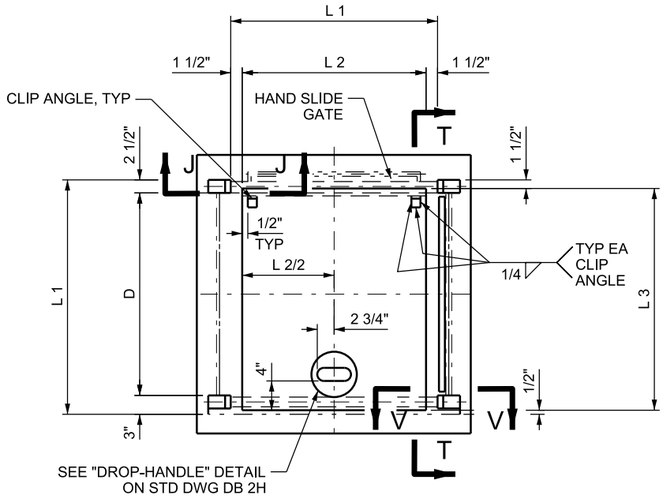

SOLID COVER TYPE B PLAN

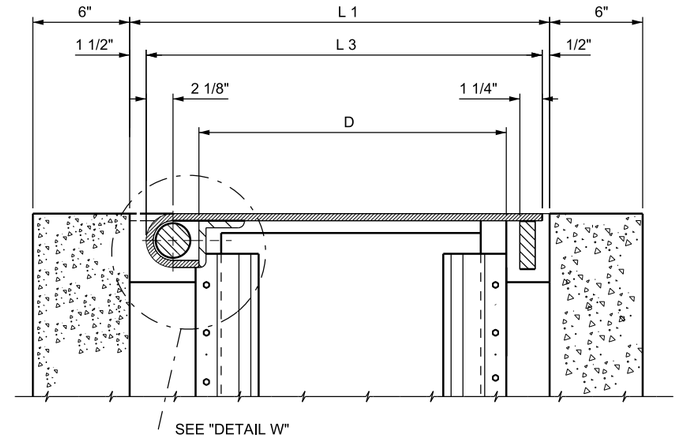

SECTION T-T

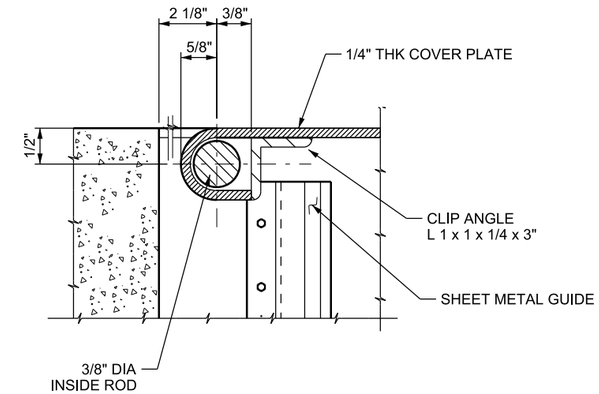

DETAIL W

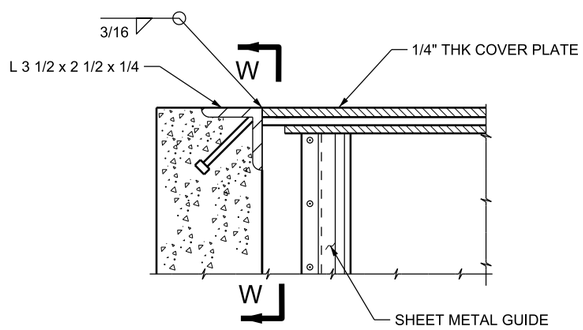

SECTION J-J

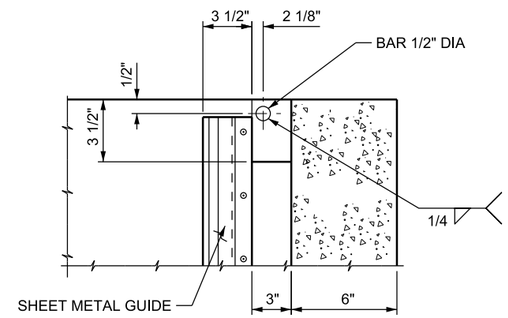

SECTION W-W

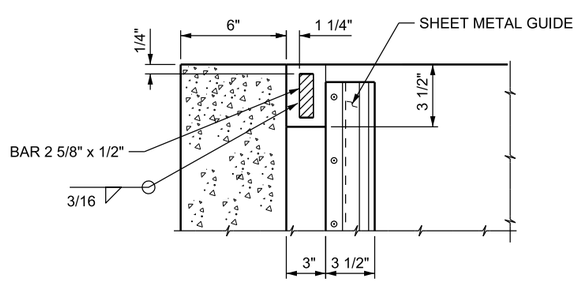

SECTION X-X

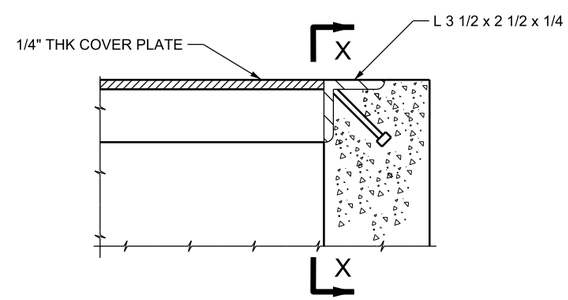

SECTION V-V

SOLID COVER TYPE B DIMENSIONS						
LINE NO	HAND SLIDE GATE		WALL SIZE	COVER PLATE		
	A	B	L 1	D	L 2	L 3
1	12"	12"	2'- 0"	1'- 6 ½"	1'- 9"	1'- 10"
2	18"	18"	2'- 6"	2'- 0 ½"	2'- 3"	2'- 4"
3	24"	24"	3'- 0"	2'- 6 ½"	2'- 9"	2'- 10"

DESIGN DATA

LOADING - COVER PLATES ARE DESIGNED FOR A LOAD OF 600 lbs/sq ft
Fy = 36,000 psi

NOTES

1. REFERENCE DB SERIES STD DWGS.
2. PREFORMED JOINT MATERIAL: AASHTO DESIGNATION M 213
3. ALL STRUCTURAL STEEL EITHER STRUCTURAL CARBON STEEL CONFORMING TO AASHTO DESIGNATION M 270, GRADE 36 OR A RAISED PATTERN CARBON STEEL (U.S. STEEL S 300) OR USED IN SIDEWALK LOCATIONS ONLY.
4. HOT DIP GALVANIZE HINGED LID SOLID COVERS AFTER FABRICATION IN ACCORDANCE WITH AASHTO DESIGNATION M 111 (ASTM A 123).
5. PROVIDE A RUBBED FINISH FOR ALL BEARING SURFACES AT TOP OF WALL, AT THE DISCRETION OF THE ENGINEER, RECESS THE COVER PLATE THE THICKNESS OF THE COVER PLATE, AND USE A CEMENT GROUT ON ALL BEARING SURFACES TO LEVEL THE HINGED LID WHEN HINGED LID IS PLACED IN SIDEWALK LOCATIONS.
6. USE HINGED LID (SOLID COVER) ONLY IN APPLICATIONS THAT WILL NOT CARRY TRAFFIC.
7. AUTOMATICALLY END WELD THE 1/2 INCH x 4 1/8 INCH H4-L NELSON CONCRETE ANCHOR TO THE FILLET OF THE ANGLE. CENTER ANCHOR ABOUT FILLET. SEE SECTION V-V.

REVISIONS

NO.	DATE	APPR.	REMARKS

UTAH DEPARTMENT OF TRANSPORTATION
STANDARD DRAWINGS FOR ROAD AND BRIDGE CONSTRUCTION
SALT LAKE CITY, UTAH

RECOMMENDED FOR APPROVAL — JAN.01, 2017 DATE
CHAIRMAN STANDARDS COMMITTEE APPROVED — JAN.01, 2017 DATE
DEPUTY DIRECTOR

STANDARD DIVERSION BOX
HINGED LID
SOLID COVER
TYPE B DETAILS

STANDARD DRAWING TITLE

STD. DWG. NO.
DB 2G

28-NOV-2016 DGN File:L:\Standard_Drawings\Imperial\2017 Approved\1-All Drawings\DB02G.dgn

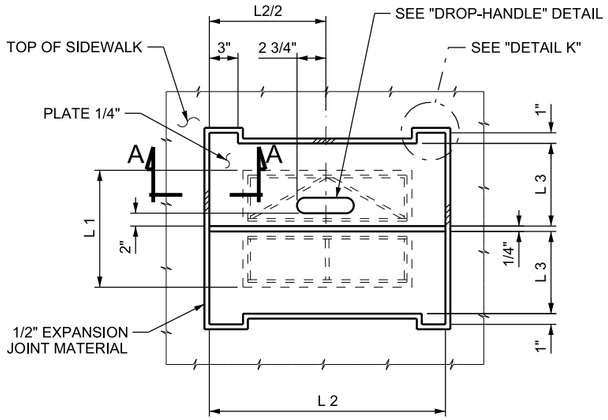

SOLID COVER TYPE C PLAN

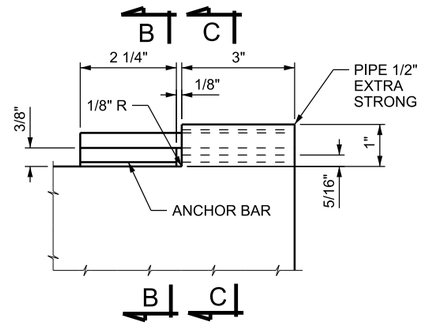

DETAIL K

PAINT THIS SIGN ON COVER PLATE AFTER FABRICATION WITH 2" HIGH LETTERS: "RAISE COVER PLATE TO CHANGE GATES"

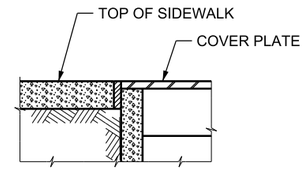

SECTION A-A

SOLID COVER TYPE C SUB-FRAME TYPE III DIMENSIONS										
LINE NO	HAND SLIDE GATE		WALL SIZE	COVER PLATE			SUB-FRAME TYPE III			
	A	B	L1	L2	L3	t	L4	L5	L6	BAR SIZE
1	12"	12"	2'- 0"	3'- 0"	1'- 5 7/8"	1/4"	-	-	-	-
2	18"	18"	2'- 6"	3'-6"	1'- 8 7/8"	1/4"	-	-	-	-
3	24"	24"	3'- 0"	4'- 0"	1'- 11 7/8"	3/16"	1'- 4 3/4"	1'- 5 3/4"	1'- 11"	3 1/2" x 1/2"
4	36"	36"	4'- 4"	5'- 4"	2'- 1 7/8"	3/16"	2'- 0 3/4"	2'- 1 3/4"	2'- 10 1/4"	3 1/2" x 1/2"

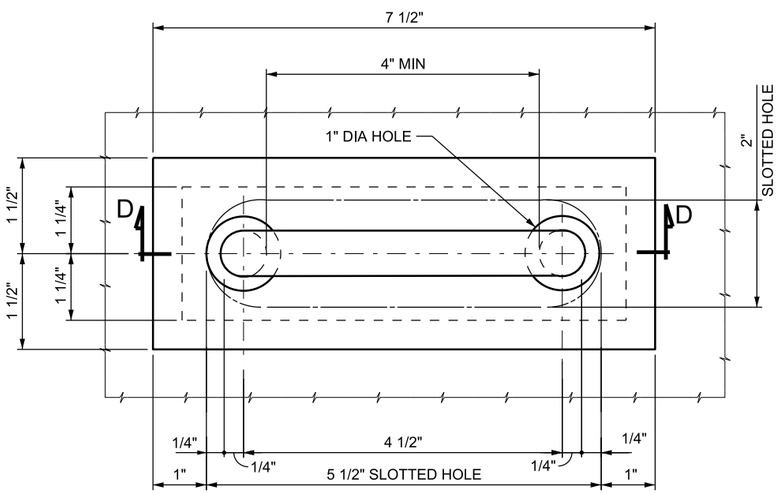

PLAN
DROP HANDLE

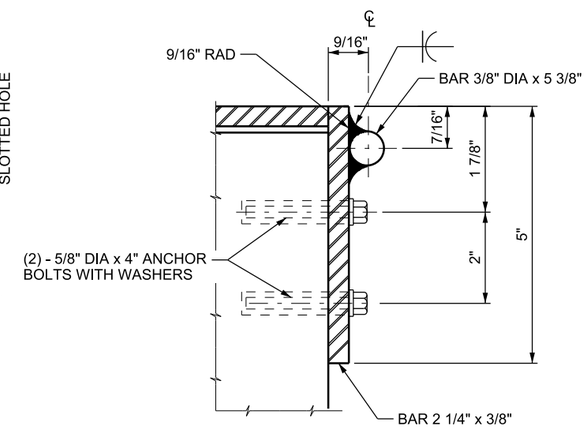

SECTION B-B

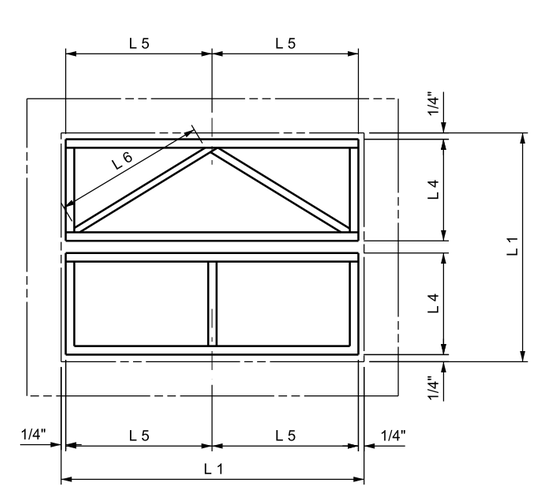

SUB-FRAME TYPE III

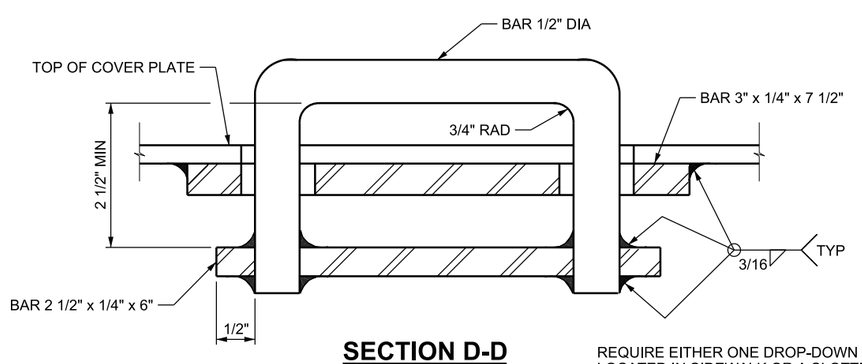

SECTION D-D
DROP HANDLE

REQUIRE EITHER ONE DROP-DOWN HANDLE IF LOCATED IN SIDEWALK OR A SLOTTED HAND HOLE 2" x 5 1/2" FOR EACH DIVERSION BOX COVER

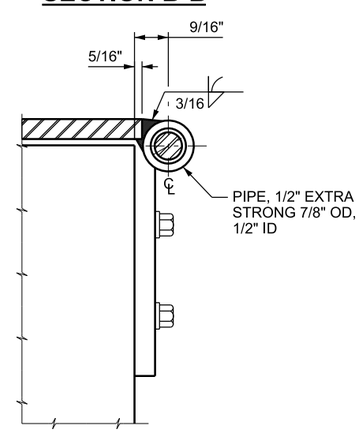

SECTION C-C

NOTES

1. REFERENCE DB SERIES STD DWGS.
2. USE HINGED LID (SOLID COVER) ONLY IN APPLICATIONS THAT WILL NOT CARRY TRAFFIC.

REVISIONS

NO.	DATE	APPR.	REMARKS

UTAH DEPARTMENT OF TRANSPORTATION
STANDARD DRAWINGS FOR ROAD AND BRIDGE CONSTRUCTION
SALT LAKE CITY, UTAH

RECOMMENDED FOR APPROVAL — JAN.01.2017 DATE
CHAIRMAN STANDARDS COMMITTEE APPROVED — JAN.01.2017 DATE
DEPUTY DIRECTOR

STANDARD DIVERSION BOX
HINGED LID
SOLID COVER
TYPE B AND C DETAILS

STANDARD DRAWING TITLE

STD. DWG. NO.
DB 2H

DGN File:L:\Standard Drawings\Imperial\2017 Approved\1-All Drawings\DB02H.dgn
28-NOV-2016

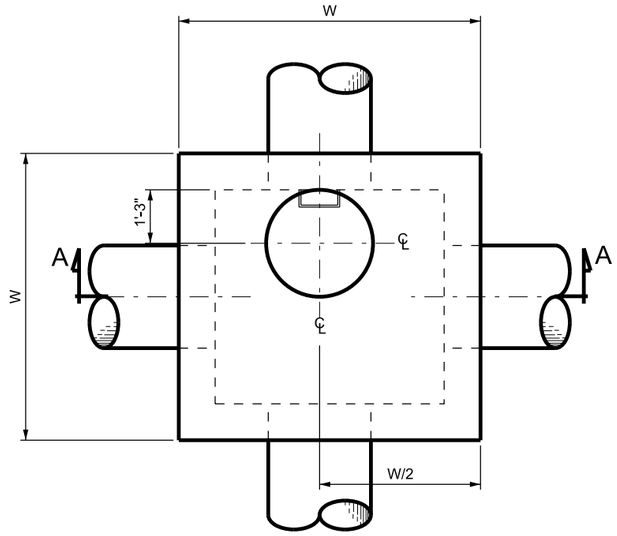

BOX PLAN

FURNISH PRECAST GRADE RINGS IN HEIGHTS OF 4", 6" OR 8", TOTAL HEIGHT OF GRADE RINGS NOT TO EXCEED 1'-0"

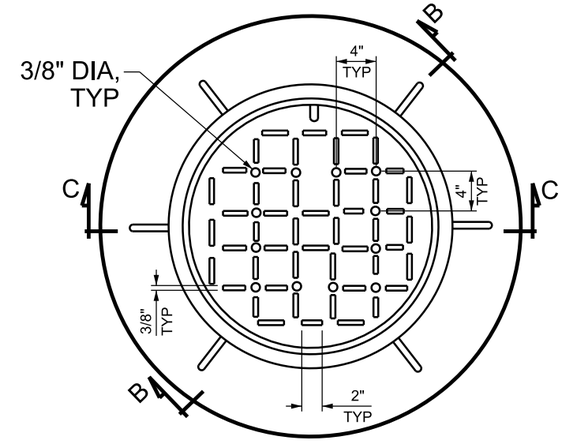

MANHOLE PLAN

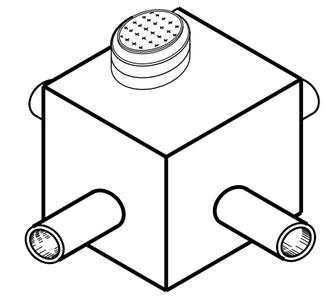

ISOMETRIC VIEW

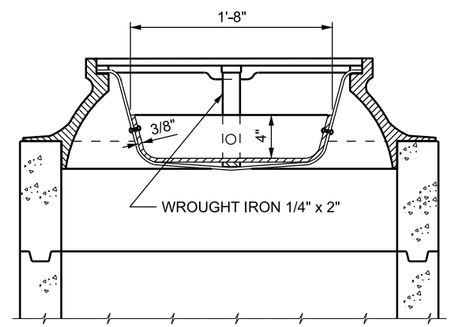

SECTION B-B

(PAN SECTION - LID REMOVED)

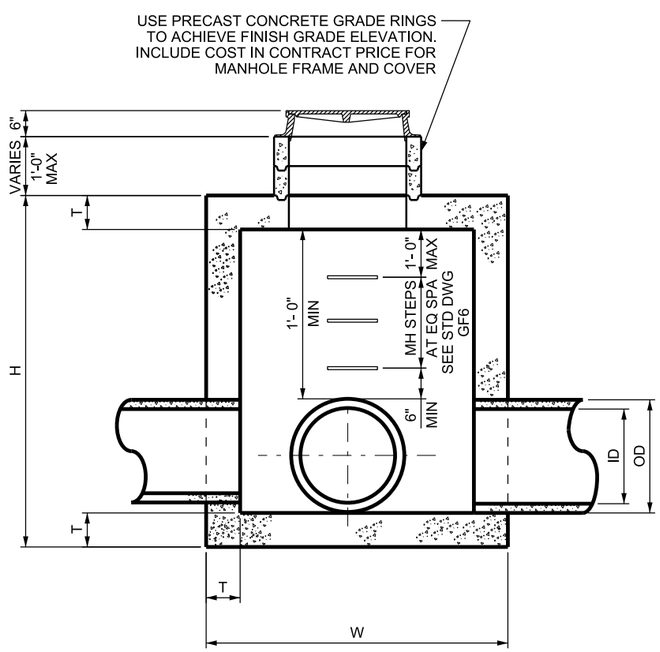

SECTION A-A

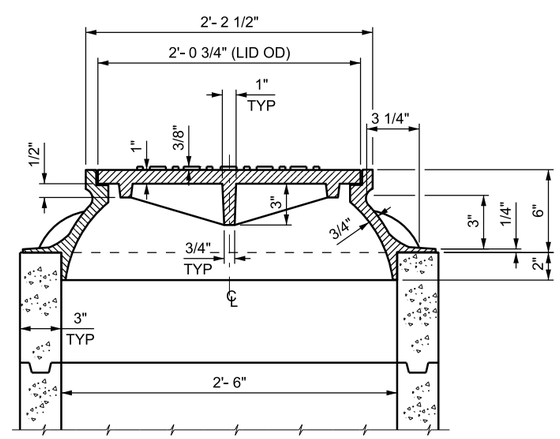

SECTION C-C

(LID SECTION - PAN REMOVED)

DESIGN DATA

STRUCTURAL CONCRETE: f 'c = 4,000 psi; fy = 60,000 psi; n = 8

QUANTITIES

STRUCTURAL CONCRETE
REINFORCING STEEL
— SEE SCHEDULE OF INSTALLATION

INDEX OF SHEETS

DB 3A - STANDARD DIVERSION BOX WITH MANHOLE COVER SITUATION AND LAYOUT
DB 3B - STANDARD DIVERSION BOX WITH MANHOLE COVER UP TO 42" RCP AND UP TO 54" CMP (SCHEDULE OF INSTALLATION)
DB 3C - STANDARD DIVERSION BOX WITH MANHOLE COVER 48" TO 72" RCP AND 60" TO 84" CMP (SCHEDULE OF INSTALLATION)

GENERAL NOTES

1. USE COATED DEFORMED-CARBON REINFORCING STEEL BARS CONFORMING TO AASHTO M 284 OR M 111 AND M 31 GRADE 60 RESPECTIVELY.
2. FIELD CUT AND BEND REINFORCING STEEL AS NECESSARY TO CLEAR PIPES AND MAINTAIN 2 INCH COVER. REPAIR ANY DAMAGE OR CUTS TO THE EPOXY COATING ON REINFORCING BARS.
3. USE CLASS AA (AE) CONCRETE.
4. USE TYPE II CEMENT (LOW ALKALI).
5. PROVIDE 2 INCH CONCRETE COVER TO REINFORCING STEEL.
6. PROVIDE MANHOLE COVER THAT CONFORMS TO AASHTO M 105 AND M 306.
7. FURNISH MANHOLE COVER IN EITHER DUCTILE IRON (ASTM A 536 GRADE 60) OR GRAY CAST IRON (AASHTO M 105, CLASS 30B).
8. SEE ROADWAY PLANS FOR NUMBER, LOCATION, AND SIZE OF PIPE.
9. PROVIDE 3/4 INCH CHAMFER ON ALL EXPOSED CONCRETE CORNERS.
10. SEE STD DWG GF 6 FOR MANHOLE STEP DETAIL.

REVISIONS

NO.	DATE	APPR.	REMARKS

UTAH DEPARTMENT OF TRANSPORTATION
STANDARD DRAWINGS FOR ROAD AND BRIDGE CONSTRUCTION
SALT LAKE CITY, UTAH

RECOMMENDED FOR APPROVAL — JAN.01, 2017 DATE
CHAIRMAN STANDARDS COMMITTEE APPROVED — JAN.01, 2017 DATE
DEPUTY DIRECTOR

STANDARD DIVERSION BOX WITH MANHOLE COVER SITUATION AND LAYOUT
STANDARD DRAWING TITLE

STD. DWG. NO.
DB 3A

DGN File: L:\Standard Drawings\Imperial\2017 Approved\1-All Drawings\DB03A.dgn
28-NOV-2016

SCHEDULE OF INSTALLATION

LINE	DIMENSIONS H	W	T	A	MAX PIPE DIA RCP	MAX PIPE DIA CMP	REINFORCING STEEL S1 a	S1 b	S1 LGTH	S1 QT	W1 LGTH	W1 QT	W2 N	W2 LGTH	W2 QT	P1 LGTH	P1 QT	MAN STEP QT	QUANTITIES CONC CU YD	REINF STEEL LBS	FRAME COVER LBS	LINE
1	4'- 0	5'- 0	8"	10"	15"	18"	18"	4'- 0	7'- 0	12	3'- 0	20	2	4'- 8	20	3'-6	4	2	2.255	262.1	245	1
2	4'- 4	5'- 0	↑	6"	18"	21"	↑	4'- 0	7'- 0	↑	3'- 4	↑	3	4'- 8	24	↑	↑	2	2.397	288.6	↑	2
3	4'- 8	5'- 0		8"	24"	24"		4'- 0	7'- 0		3'- 8		3	4'- 8	24			2	2.540	295.5		3
4	5'- 0	6'- 0		10"	24"	30"		5'- 0	8'- 0		4'- 0		3	5'- 8	24			3	3.588	340.0		4
5	5'- 4	↑		6"	27"	36"		↑	↑		4'- 4		4	↑	28			3	3.764	370.6		5
6	5'- 8			8"	30"	36"					4'- 8		4		28			3	3.939	377.6		6
7	6'- 0			10"	36"	42"					5'- 0		4		28			4	4.115	384.5		7
8	6'- 4			6"	36"	48"					5'- 4		5		32			4	4.290	415.1		8
9	6'- 8			8"	42"	48"					5'- 8		5		32			4	4.466	422.1		9
10	7'- 0			10"	↑	54"					6'- 0		5		32			5	4.641	429.0		10
11	7'- 4			6"		↑					6'- 4		6		36			5	4.817	459.6		11
12	7'- 8			8"							6'- 8		6		36			5	4.993	466.6		12
13	8'- 0			10"							7'- 0		6		36			6	5.168	473.5		13
14	8'- 4			6"							7'- 4		7		40			6	5.344	504.1		14
15	8'- 8			8"							7'- 8		7		40			6	5.519	511.1		15
16	9'- 0			10"							8'- 0		7		40			7	5.695	518.0		16
17	9'- 4			6"							8'- 4		8		44			7	5.871	548.6		17
18	9'- 8			8"							8'- 8		8		44			7	6.046	555.6		18
19	10'- 0			10"							9'- 0		8		44			8	6.223	562.5		19
20	10'- 4			6"							9'- 4		9		48			8	6.397	593.1		20
21	10'- 8			8"							9'- 8		9		48			8	6.573	600.1		21
22	11'- 0			10"							10'- 0		9		48			9	6.748	607.0		22
23	11'- 4			6"							10'- 4		10		52			9	6.924	637.6		23
24	11'- 8			8"							10'- 8		10		52			9	7.100	644.6		24
25	12'- 0			10"							11'- 0		10		52			10	7.275	651.5		25
26	12'- 4			6"							11'- 4		11		56			10	7.451	682.1		26
27	12'- 8			8"							11'- 8		11		56			10	7.626	689.1		27
28	13'- 0			10"							12'- 0		11		56			11	7.802	696.0		28
29	13'- 4			6"							12'- 4		12		60			11	7.978	726.6		29
30	13'- 8			8"							12'- 8		12		60			11	8.153	733.6		30
31	14'- 0			10"							13'- 0		12		60			12	8.329	740.5		31
32	14'- 4			6"							13'- 4		13		64			12	8.504	771.1		32
33	14'-8			8"							13'- 8		13		64			12	8.680	778.1		33
34	15'-0			10"							14'- 0		13		64			13	8.855	785.0		34
35	15'- 4			6"							14'- 4		14		68			13	9.031	815.6		35
36	15'- 8			8"							14'- 8		14		68			13	9.206	822.6		36
37	16'- 0			10"							15'- 0		14		68			14	9.382	829.5		37
38	16'- 4			6"							15'- 4		15		72			14	9.558	860.1		38
39	16'- 8			8"							15'- 8		15		72			14	9.733	867.1		39
40	17'- 0			10"							16'- 0		15		72			15	9.909	874.0		40
41	17'- 4			6"							16'- 4		16		76			15	10.084	904.6		41
42	17'- 8			8"							16'- 8		16		76			15	10.260	911.6		42
43	18'- 0			10"							17'- 0		16		76			16	10.436	918.5		43
44	18'- 4			6"							17'- 4		17		80			16	10.611	949.1		44
45	18'- 8			8"							17'- 8		17		80			16	10.787	956.1		45
46	19'- 0			10"							18'- 0		17		80			17	10.962	963.0		46
47	19'- 4			6"							18'- 4		18		84			17	11.138	993.6		47
48	19'- 8			8"							18'- 8		18		84			17	11.314	1000.6		48
49	20'- 0			10"							19'- 0		18		84			18	11.489	1007.5		49
50	20'- 4			6"							19'- 4		19		88			18	11.665	1038.1		50
51	20'- 8			8"							19'- 8		19		88			18	11.840	1045.1		51
52	21'- 0			10"							20'- 0		19		88			19	12.016	1052.0		52
53	21'- 4			6"							20'- 4		20		92			19	12.192	1082.6		53
54	21'- 8			8"							20'- 8		20		92			19	12.367	1089.6		54
55	22'-0			10"							21'- 0		20		92			20	12.543	1096.5		55
56	22'- 4			6"							21'- 4		21		96			20	12.718	1127.1		56
57	22'- 8			8"							21'- 8		21		96			20	12.894	1134.1		57
58	23'- 0			10"							22'- 0		21		96			21	13.069	1141.0		58
59	23'- 4			6"							22'- 4		22		100			21	13.245	1171.6		59
60	23'- 8			8"							22'- 8		22		100			21	13.421	1178.6		60
61	24'- 0			10"							23'- 0		22		100			22	13.596	1185.5		61
62	24'- 4			6"							23'- 4		23		104			22	13.772	1216.1		62
63	24'- 8	↓	↓	8"	↓	↓	↓	↓	↓	↓	23'- 8	↓	23	↓	104	↓	↓	22	13.947	1223.1	↓	63
64	25'- 0	6'-0	8"	10"	42"	54"	18"	5'-0	8'-0	12	24'- 0	20	23	5'- 8	104	3'- 6	4	23	14.123	1230.0	245	64

TABLE A			
CMP		RCP	
DIA	CU YD	DIA	CU YD
12"	0.037	12"	0.019
15"	0.053	15"	0.030
18"	0.071	18"	0.044
21"	0.095	21"	0.059
24"	0.121	24"	0.078
27"	0.151	30"	0.121
30"	0.184	36"	0.175
33"	0.221	42"	0.238
36"	0.261	48"	0.310
42"	0.350	54"	0.393

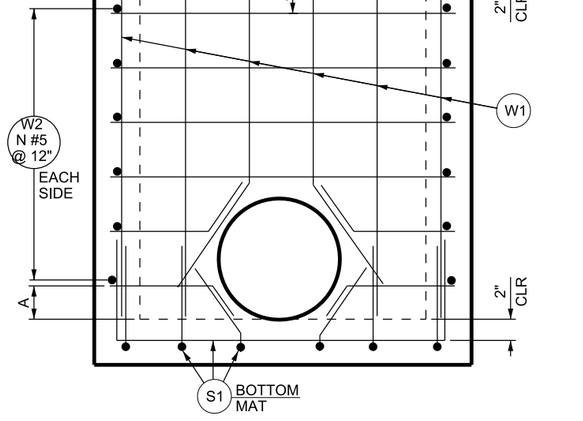

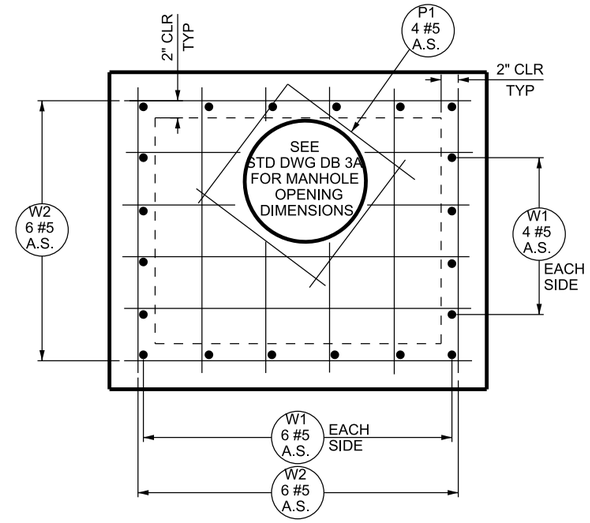

PLAN OF TOP SLAB

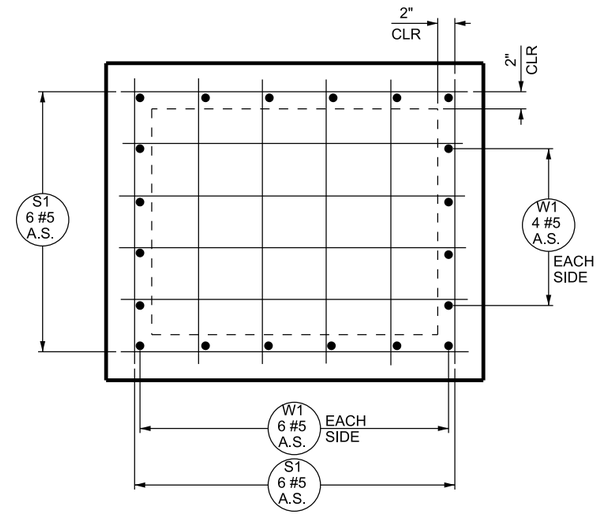

PLAN OF BOTTOM SLAB

TYPICAL WALL ELEVATION

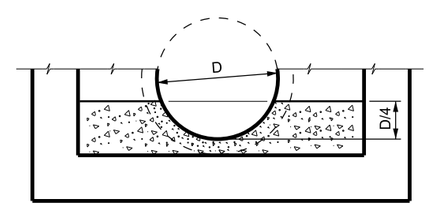

FORMED INVERT DETAIL

NOTES

1. REFERENCE DB SERIES STD DWGS.
2. DEDUCT CONCRETE DISPLACED BY PIPES FROM CONCRETE QUANTITIES SHOWN IN SCHEDULE OF INSTALLATION IN ACCORDANCE WITH "TABLE A."
3. FORM THE BOTTOM SLAB OF THE BOX TO FIT THE INVERT OF THE PIPES WHEN REQUIRED ACCORDING TO THE DETAIL SHOWN ON THIS SHEET (FORMED INVERT).
4. QUANTITIES SHOWN IN THE SCHEDULE OF INSTALLATION ARE FOR ONE UNIT ONLY.
5. FIELD CUT OR BEND REINFORCING STEEL AS NECESSARY TO CLEAR PIPES AND MAINTAIN 2 INCH MINIMUM CLEARANCE.
6. UNLESS OTHERWISE SHOWN ALL DIMENSIONS ARE OUT-TO-OUT OF BARS.
7. WEIGHT QUANTITIES FOR MANHOLE FRAME AND COVER ARE SHOWN FOR INFORMATION ONLY.
8. SEE STD DWG DB 3A FOR DIMENSIONS. SEE STD DWG GF 6 FOR MANHOLE STEP DETAILS.
9. PIPE DIAMETERS SHOWN IN TABLES AND SCHEDULES ARE INSIDE DIAMETERS.
10. ADD AN ADDITIONAL AMOUNT OF CONCRETE TO QUANTITIES SHOWN IN THE SCHEDULE OF INSTALLATION WHEN FORMED INVERT IS REQUIRED.
11. MAXIMUM PIPE DIMENSIONS SHOWN IN SCHEDULE OF INSTALLATION ARE FOR PIPES PERPENDICULAR TO WALLS OF BOX. DETERMINE CLEARANCES FOR SKEWED PIPES.

NO.	DATE	APPR.	REMARKS

REVISIONS

UTAH DEPARTMENT OF TRANSPORTATION
STANDARD DRAWINGS FOR ROAD AND BRIDGE CONSTRUCTION
SALT LAKE CITY, UTAH

RECOMMENDED FOR APPROVAL — JAN.01.2017 DATE
CHAIRMAN STANDARDS COMMITTEE — JAN.01.2017 DATE
APPROVED
DEPUTY DIRECTOR

STANDARD DIVERSION BOX WITH MANHOLE COVER UP TO 42 INCH RCP AND UP TO 54 INCH CMP

STANDARD DRAWING TITLE

STD. DWG. NO.
DB 3B

DGN File:L:\Standard_Drawings\Imperial\2017 Approved\1-All Drawings\DB03B.dgn
28-NOV-2016

SCHEDULE OF INSTALLATION

LINE	DIMENSIONS H	W	T	A	MAX PIPE DIA RCP	MAX PIPE DIA CMP	REINFORCING STEEL S1 a	S1 b	S1 LGTH	S1 QT	S2 LGTH	S2 QT	W1 LGTH	W1 QT	W1 N	W2 LGTH	W2 QT	P1 LGTH	P1 QT	MAN STEP QT	QUANTITIES CONC CU YD	FRAME COVER LBS	REINF STEEL LBS	LINE
65	8'- 0	9'- 0	10"	8"	48"	60"	2'- 0	8'- 8	12'- 8	20	2'- 0	36	7'- 0	72	6	8'- 8	108	3'-6	8	5	11.234	1870.4	245	65
66	8'- 4	↑	↑	10"	54"	66"	↑	↑	↑	↑	↑	↑	7'- 4	↑	6	↑	108	↑	↑	5	11.570	1895.5	↑	66
67	8'- 8			6"	60"	72"							7'- 8		7		116			6	11.906	1992.8		67
68	9'- 0			8"	60"	72"							8'- 0		7		116			6	12.242	2017.9		68
69	9'- 4			10"	66"	78"							8'- 4		7		116			6	12.578	2042.9		69
70	9'- 8			6"	66"	84"							8'- 8		8		124			7	12.914	2140.2		70
71	10'- 0			8"	72"	↑							9'- 0		8		124			7	13.250	2165.3		71
72	10' -4			10"	↑								9'- 4		8		124			7	13.586	2190.3		72
73	10'- 8			6"									9'- 8		9		132			8	13.922	2287.6		73
74	11'- 0			8"									10'- 0		9		132			8	14.258	2312.7		74
75	11'- 4			10"									10'- 4		9		132			8	14.594	2337.7		75
76	11'- 8			6"									10'- 8		10		140			9	14.931	2435.1		76
77	12'- 0			8"									11'- 0		10		140			9	15.266	2460.1		77
78	12'- 4			10"									11'- 4		10		140			9	15.602	2485.1		78
79	12'- 8			6"									11'- 8		11		148			10	15.938	2582.5		79
80	13'- 0			8"									12'- 0		11		148			10	16.274	2607.5		80
81	13'- 4			10"									12'- 4		11		148			10	16.610	2632.5		81
82	13'- 8			6"									12'- 8		12		156			11	16.946	2729.9		82
83	14'- 0			8"									13'- 0		12		156			11	17.282	2754.9		83
84	14'- 4			10"									13'- 4		12		156			11	17.618	2779.9		84
85	14'- 8			6"									13'- 8		13		164			12	17.954	2877.3		85
86	15'- 0			8"									14'- 0		13		164			12	18.290	2902.3		86
87	15'- 4			10"									14'- 4		13		164			12	18.626	2927.3		87
88	15'- 8			6"									14'- 8		14		172			13	18.962	3024.7		88
89	16'- 0			8"									15'- 0		14		172			13	19.298	3049.7		89
90	16'- 4			10"									15'- 4		14		172			13	19.634	3074.7		90
91	16'- 8			6"									15'- 8		15		180			14	19.970	3172.1		91
92	17'- 0			8"									16'- 0		15		180			14	20.306	3197.1		92
93	17'- 4			10"									16'- 4		15		180			14	20.642	3222.1		93
94	17'- 8			6"									16'- 8		16		188			15	20.978	3319.5		94
95	18'- 0			8"									17'- 0		16		188			15	21.314	3344.5		95
96	18'- 4			10"									17'- 4		16		188			15	21.650	3369.5		96
97	18'- 8			6"									17'- 8		17		196			16	21.986	3466.9		97
98	19'- 0			8"									18'- 0		17		196			16	22.322	3491.9		98
99	19'- 4			10"									18'- 4		17		196			16	22.658	3516.9		99
100	19'- 8			6"									18'- 8		18		204			17	22.994	3614.3		100
101	20'- 0			8"									19'- 0		18		204			17	23.330	3639.3		101
102	20'- 4			10"									19'-4		18		204			17	23.666	3664.3		102
103	20'- 8			6"									19'- 8		19		212			18	24.002	3761.7		103
104	21'- 0			8"									20'- 0		19		212			18	24.338	3786.7		104
105	21'- 4			10"									20'- 4		19		212			18	24.674	3811.7		105
106	21'- 8			6"									20'- 8		20		220			19	25.010	3909.1		106
107	22'- 0			8"									21'- 0		20		220			19	25.346	3934.1		107
108	22'- 4			10"									21'- 4		20		220			19	25.682	3959.1		108
109	22'- 8			6"									21'- 8		21		228			20	26.018	4056.5		109
110	23'- 0			8"									22'- 0		21		228			20	26.354	4081.5		110
111	23'- 4			10"									22'- 4		21		228			20	26.690	4106.5		111
112	23'- 8			6"									22'- 8		22		236			21	27.026	4203.9		112
113	24'- 0			8"									23'- 0		22		236			21	27.362	4228.9		113
114	24'- 4			10"									23'- 4		22		236			21	27.698	4253.9		114
115	24'- 8			6"									23'- 8		23		244			22	28.034	4351.3		115
116	25'- 0			8"									24'- 0		23		244			22	28.370	4376.3		116
117	25'- 4			10"									24'- 4		23		244			22	28.706	4401.3		117
118	25'- 8			6"									24'- 8		24		252			23	29.042	4498.7		118
119	26'- 0			8"									25'- 0		24		252			23	29.378	4523.7		119
120	26'- 4			10"									25'- 4		24		252			23	29.714	4548.7		120
121	26'- 8			6"									25'- 8		25		260			24	30.050	4646.1		121
122	27'- 0			8"									26'- 0		25		260			24	30.386	4671.1		122
123	27'- 4			10"									26'- 4		25		260			24	30.722	4696.1		123
124	27'- 8			6"									26'- 8		26		268			25	31.058	4793.5		124
125	28'- 0			8"									27'- 0		26		268			25	31.394	4818.5		125
126	28'- 4			10"									27'- 4		26		268			25	31.730	4843.5		126
127	28'- 8			6"									27'- 8		27		276			26	32.066	4940.9		127
128	29'- 0	9'-0	10"	8"	72"	84"	2'- 0	8'- 8	12'- 8	20	2'- 0	36	28'- 0	72	27	8'- 8	276	3'-6	8	26	32.402	4965.9	245	128

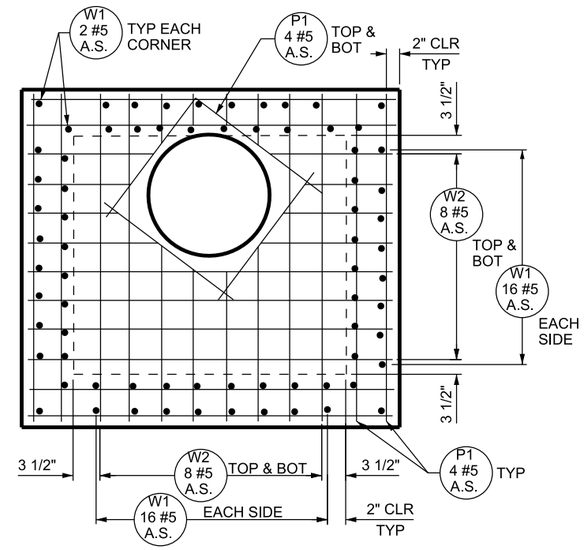

PLAN OF TOP SLAB

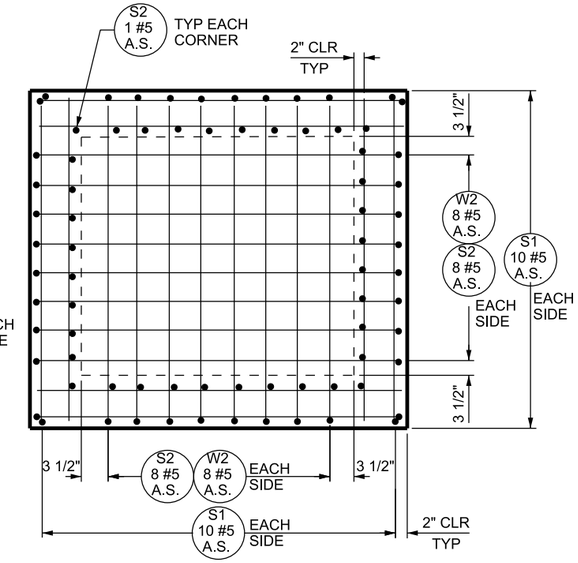

PLAN OF BOTTOM SLAB

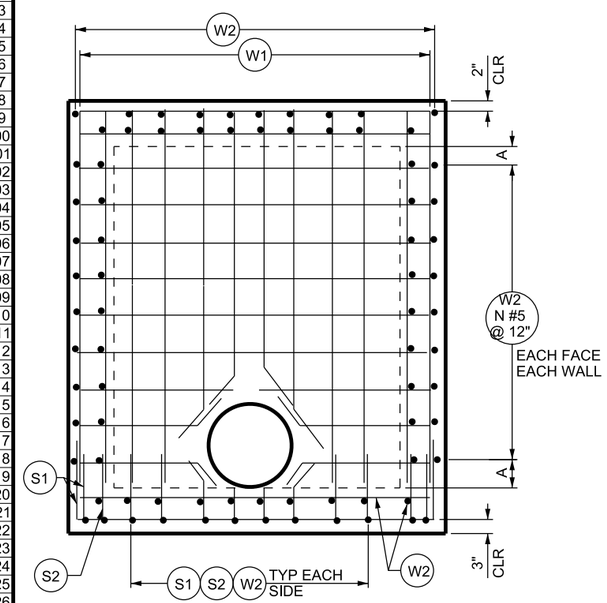

TYPICAL WALL ELEVATION

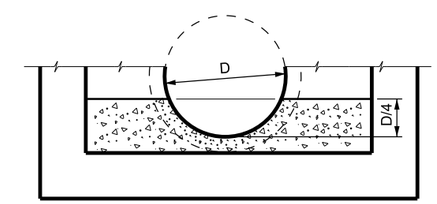

FORMED INVERT DETAIL

TABLE A			
RCP		CMP	
DIA	CU YD	DIA	CU YD
48"	0.566	60"	0.606
54"	0.711	66"	0.733
60"	0.873	72"	0.873
66"	1.051	78"	1.024
72"	1.245	84"	1.188

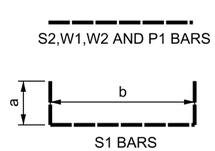

NOTES

1. REFERENCE DB SERIES STD DWGS.
2. SEE STD DWG DB 3A FOR MANHOLE OPENING DIMENSIONS.
3. SEE STD DWG DB 3B FOR NOTES.

REVISIONS

NO.	DATE	APPR.	REMARKS

UTAH DEPARTMENT OF TRANSPORTATION
STANDARD DRAWINGS FOR ROAD AND BRIDGE CONSTRUCTION
SALT LAKE CITY, UTAH

RECOMMENDED FOR APPROVAL — JAN.01.2017 DATE
CHAIRMAN STANDARDS COMMITTEE
APPROVED — JAN.01.2017 DATE
DEPUTY DIRECTOR

STANDARD DIVERSION BOX WITH MANHOLE COVER 48 INCH TO 72 INCH RCP AND 60 INCH TO 84 INCH CMP

STANDARD DRAWING TITLE

STD. DWG. NO.
DB 3C

DGN File: L:\Standard Drawings\Imperial\2017 Approved\1-All Drawings\DB03C.dgn
28-NOV-2016

SCHEDULE

LINE	PIPE DIA INCHES	PIPE ARCH (IN)		DIVERSION BOX		DIMENSIONS					TRANSITION ONE EACH B1				B2				B3				B4				B5				B6				B7				C		E			A1		A2		A3		A4		LINE
	D	S	R	H	A	H	T	M	N	P	a	b	f	LENGTH	a	b	f	LENGTH	a	b	f	LENGTH	a	b	f	LENGTH	a	b	f	LENGTH	a	b	f	LENGTH	a	b	f	LENGTH	LENGTH	NO.BARS	A	LENGTH	NO.BARS	LENGTH	NO.BARS	LENGTH	NO.BARS	LENGTH	NO.BARS	LENGTH	NO.BARS	
1	12"	–	--	1'- 9"	12"	1'- 9"	4'- 0"	8"	2'- 4"	11 3/8"	1'- 6"	1'- 7"	93°	4'- 8"	1'- 5"	1'- 4"	101°	4'-1"	1'- 3"	1'- 2"	111°	3'- 7"	1'- 2"	1'- 0"	126°	3'- 2"	–	–	--	–	–	–	–	–	--	–	–	--	4'- 5"	1	3'- 10"	5'- 10"	4	2'- 0"	8	1'- 4"	8	–	-	2'- 8"	8	1
2	18"	–	--	2'- 3"	18"	2'- 3"	4'-0"	1'- 0"	3'- 0"	1'- 5"	1'- 11"	2'- 1"	94°	6'- 1"	1'- 9"	1'- 10"	102°	5'- 5"	1'- 7"	1'- 7"	114°	4'- 8"	1'- 3"	1'- 6"	128°	4'- 3"	–	–	--	–	–	–	–	–	--	–	–	--	4'- 5"	2	3'- 10"	5'-10"	4	2'- 6"		1'- 10"		–	-	3'- 2"		2
3	24"	–	--	2'- 9"	24"	2'- 9"	4'-0"	1'- 6"	4'- 0"	2'- 1 ½"	2'- 5"	2'- 7"	94°	7'- 7"	2'- 0"	2'- 4"	104°	6'- 8"	2'- 2"	2'- 2"	115°	6'- 0"	1'- 4"	2'- 1"	128°	5'- 6"	–	–	--	–	–	–	–	–	--	–	–	--	4'- 5"	2	3'- 10"	5'-10"	6	3'- 0"		2'- 6"		–	-	3'- 8"		3
4	30"	–	--	3'- 3"	30"	3'- 3"	5'- 0"	1'- 10"	4'- 8"	2'- 7 ⅛"	2'- 10"	3'- 1"	93°	9'- 0"	2'- 5"	2'- 10"	101°	8'- 1"	2'- 8"	2'- 8"	110°	7'- 5"	1'- 7"	2'- 7"	120°	6'- 9"	1'- 4"	2'- 7"	130°	6'- 6"	–	–	–	–	--	–	–	--	5'- 5"	3	4'- 10"	6'- 10"	6	3'- 6"		2'- 8"		–	-	4'- 2"		4
5	36"	–	--	3'- 9"	36"	3'- 9"	6'- 0"	2'- 3"	5'- 6"	3'- 2 ⅛"	3'- 4"	3'- 7"	93°	10'- 6"	2'- 11"	3'- 4"	100°	9'- 7"	3'- 2"	3'- 2"	107°	8'- 11"	2'- 2"	3'- 2"	115°	8'- 6"	1'- 9"	3'- 1"	123°	7'- 11"	1'- 4"	3'- 2"	131°	7'- 8"	--	–	–	--	6'- 5"	3	5'- 10"	7'- 10"	8	4'- 0"		2'- 10"		–	-	4'- 8"		5
6	42"	–	--	4'- 3"	42"	4'- 3"	7'- 0"	2'- 8"	6'- 4"	3'- 9 ¼"	3'- 10"	4'- 2"	93°	12'- 2"	3'- 5"	3'- 11"	98°	11'- 3"	3'- 10"	3'- 10"	105°	10'- 8"	2'- 8"	3'- 8"	111°	10'- 0"	2'- 2"	3'- 8"	118°	9'- 6"	1'- 9"	3'- 8"	125°	9'- 1"	1'- 4"	3'- 8"	132°	8'- 8"	7'- 5"	4	6'- 10"	8'- 10"	8	4'- 6"		3'- 2"		–	-	5'- 2"		6
7	48"	–	--	4'- 9"	48"	4'- 9"	7'- 0"	3'- 2"	7'- 4"	4'- 5 ¾"	4'- 4"	4'- 8"	93°	13'- 8"	3'- 10"	4'- 5"	99°	12'- 8"	4'- 4"	4'- 4"	105°	12'- 0"	2'- 10"	4'- 3"	112°	11'- 4"	2'- 4"	4'- 3"	119°	10'- 10"	1'- 10"	4'- 3"	125°	10'- 4"	1'- 4"	4'- 4"	132°	10'- 0"	7'- 5"	4	6'- 10"	8'- 10"	10	5'- 0"		3'- 5"	8	–	-	5'- 8"		7
8	–	36"	22"	2'- 7"	36"	2'- 7"	4'-0"	1'- 8"	4'- 4"	2'- 4 ¼"	3'- 3"	2'- 5"	95°	8'- 1"	2'- 8"	2'- 4"	106°	7'- 4"	2'- 3"	2'- 3"	117°	6'- 7"	1'- 5"	2'- 4"	129°	6'- 1"	–	–	--	–	–	–	–	–	--	–	–	--	4'- 5"	3	3'- 10"	5'- 10"	4	2'- 10"		3'- 0"	4	2'- 3"	4	4'- 8"		8
9	–	43"	27"	3'- 0"	43"	3'- 0"	4'-0"	2'- 2"	5'- 4"	3'- 0 ¾"	3'- 9"	2'- 11"	95°	9'- 7"	3'- 0"	2'- 9"	107°	8'- 6"	2'- 10"	2'- 10"	119°	7'- 11"	1'- 6"	2'- 11"	130°	7'- 4"	–	–	--	–	–	–	–	–	--	–	–	--	4'- 5"	4	3'- 10"	5'- 10"	4	3'- 3"		3'- 2"		2'- 5"		5'- 3"		9
10	–	50"	31"	3'- 4"	50"	3'- 4"	5'- 0"	2'- 6"	6'- 0"	3'- 6 ⅜"	4'- 4"	3'- 3"	94°	10'- 10"	3'- 8"	3'- 2"	104°	10'- 0"	3'- 2"	3'- 2"	113°	9'- 3"	2'- 3"	3'- 3"	123°	8'- 9"	1'- 6"	3'- 5"	131°	8'- 4"	–	–	–	–	--	–	–	--	5'- 5"	5	4'- 10"	6'- 10"	6	3'- 7"		3'- 5"		2'- 5"		5'- 10"		10
11	–	58"	36"	3'- 9"	58"	3'- 9"	6'- 0"	3'- 0"	7'- 0"	4'- 3"	5'- 1"	3'- 8"	94°	12'- 5"	4'- 4"	3'- 8"	102°	11'- 8"	3'- 8"	3'- 8"	110°	10'- 11"	2'- 11"	3'- 9"	118°	10'- 5"	2'- 3"	3'- 11"	125°	10'- 1"	1'- 6"	4'- 1"	132°	9'- 8"	--	–	–	--	6'- 5"	5	5'- 10"	7'- 10"	8	4'- 0"		3'- 6"		2'- 7"		6'- 6"		11
12	–	65"	40"	4'- 1"	65"	4'- 1"	6'- 0"	3'- 4"	7'- 8"	4'- 8 ½"	5'- 7"	4'- 0"	94°	13'- 7"	4'- 9"	3'- 11"	102°	12'- 7"	4'- 0"	4'- 0"	110°	11'- 11"	3'- 2"	4'- 1"	118°	11'- 4"	2'- 4"	4'- 4"	125°	11'- 0"	1'- 7"	4'- 7"	132°	10'- 9"	--	–	–	--	6'- 5"	6	5'- 10"	7'- 10"	8	4'- 4"		4'- 0"		3'- 5"		7'- 1"		12
13	–	72"	44"	4'- 5"	72"	4'- 5"	7'- 0"	3'- 9"	8'- 6"	5'- 3 ⅝"	6'- 2"	4'- 4"	93°	14'- 10"	5'- 5"	4'- 4"	100°	14'- 1"	4'- 4"	4'- 4"	107°	13'- 4"	3'- 10"	4'- 5"	113°	12'- 8"	3'- 1"	4'- 7"	119°	12'- 3"	2'- 4"	4'- 9"	125°	11'- 10"	1'- 6"	5'- 0"	131°	11'- 6"	7'- 5"	6	6'- 10"	8'- 10"	10	4'- 8"	8	4'- 0"	4	3'- 0"	4	7'- 8"	8	13

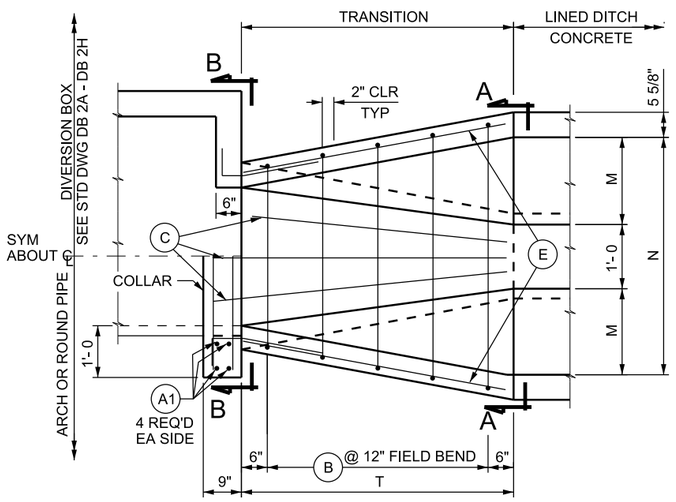

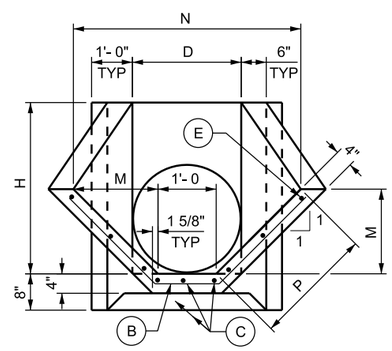

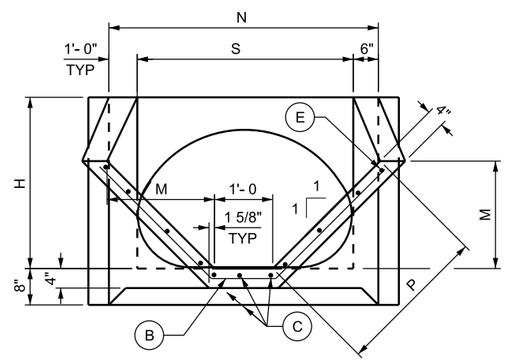

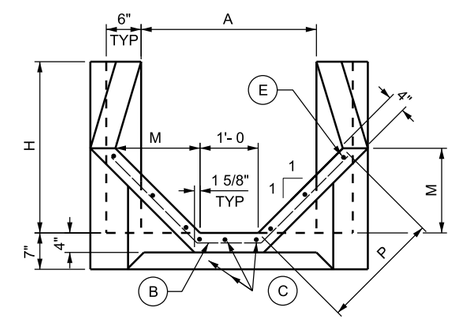

DESIGN DATA

HL-93 IN ACCORDANCE WITH AASHTO LRFD BRIDGE DESIGN AND INTERIM SPECIFICATIONS

f 'c = 4,000 psi; fy = 60,000 psi; n = 8

QUANTITIES				
LINE	CONCRETE		REINF STEEL	
	TRANS-ITION	COLLAR	TRANS-ITION	COLLAR
	LB	LB	CU YD	CU YD
1	29	32.1	0.2614	0.2014
2	35	40.1	0.3351	0.2836
3	47	49.1	0.4219	0.3796
4	64	55.2	0.6174	0.4896
5	90	61.5	0.8587	0.6134
6	115	69.6	1.1392	0.7511
7	133	75.3	1.2887	0.9028
8	43	54.0	0.4503	0.4514
9	50	60.3	0.5325	0.5687
10	77	66.9	0.7429	0.6852
11	107	72.4	1.0151	0.8383
12	115	81.8	1.1100	0.9786
13	150	85.6	1.4140	1.1296

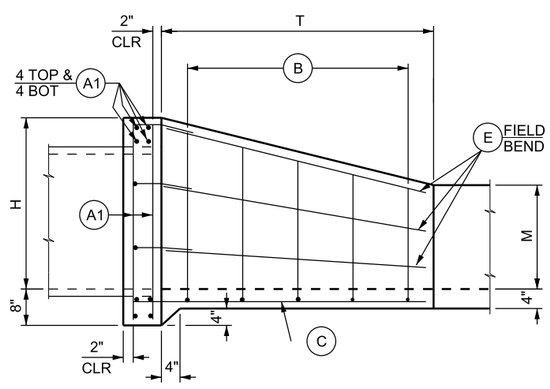

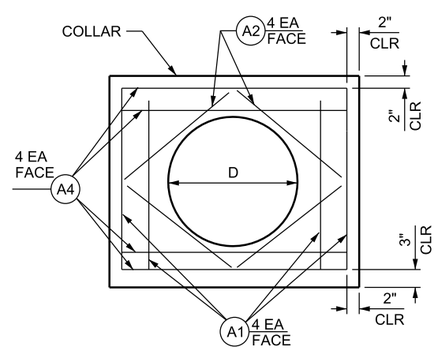

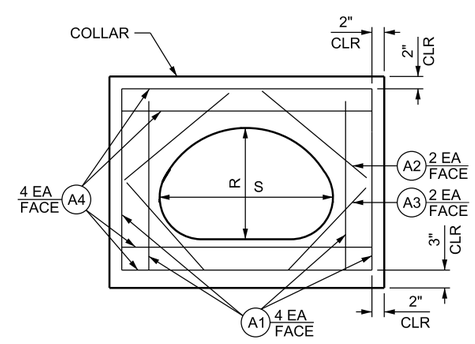

NOTES

1. REFERENCE DB SERIES STD DWGS.
2. USE COATED DEFORMED-CARBON REINFORCING STEEL BARS CONFORMING TO AASHTO M 284 OR M 111 AND M 31 GRADE 60.
3. TYPE II CEMENT (LOW ALKALI) REQUIRED.
4. DEDUCT CONCRETE DISPLACED BY PIPE FROM THOSE CONCRETE QUANTITIES GIVEN IN SCHEDULE.
5. ADJUST CONCRETE QUANTITIES ACCORDINGLY IF PIPE SIZES OTHER THAN SHOWN ARE USED OR IF PIPES ARE SKEWED.
6. USE #4 REINFORCING STEEL SPACED EQUALLY AT 12 INCH ±.

REVISIONS

NO.	DATE	APPR.	REMARKS

UTAH DEPARTMENT OF TRANSPORTATION
STANDARD DRAWINGS FOR ROAD AND BRIDGE CONSTRUCTION
SALT LAKE CITY, UTAH

RECOMMENDED FOR APPROVAL — JAN.01, 2017 DATE
CHAIRMAN STANDARDS COMMITTEE APPROVED — JAN.01, 2017 DATE
DEPUTY DIRECTOR

STANDARD TRANSITION CONCRETE LINED DITCH TO PIPE OR DIVERSION BOX

STANDARD DRAWING TITLE

STD. DWG. NO.
DB 4

DGN File: L:\Standard Drawings\Imperial\2017 Approved\1-All Drawings\DB04.dgn
28-NOV-2016

STANDARD SCREW GATE AND FRAME DIMENSIONS FOR 5'-0 OF HEAD OR LESS

SIZE OF CLEAR ** OPENING	A	18"	24"	18"	24"	30"	36"	48"	24"	30"	36"	42"	48"	24"	30"	36"	42"	48"	60"	24"	30"	36"	42"	48"	60"	72"	24"	30"	36"	42"	48"
	B	18"	18"	24"	24"	24"	24"	24"	30"	30"	30"	30"	30"	36"	36"	36"	36"	36"	36"	42"	42"	42"	42"	42"	42"	42"	48"	48"	48"	48"	48"
MINIMUM GATE DIMENSION	HEIGHT	18"	18"	24"	24"	24"	24"	24"	30"	30"	30"	30"	30"	36"	36"	36"	36"	36"	36"	42"	42"	42"	42"	42"	42"	42"	48"	48"	48"	48"	48"
	WIDTH	22"	28"	22"	28"	34"	41"	53"	28"	34"	41"	47"	52"	29"	35"	41"	47"	54"	67"	29"	35"	41"	47"	54"	67"	79"	30"	36"	42"	48"	54"
* FRAME HEIGHTS	5'- 0	X	X	X	X	X	X		X	X				X	X					X	X						X	X			
	6'- 0	X	X	X	X	X	X		X	X	X	X		X	X	X	X			X	X	X	X				X	X	X	X	
	7'- 0	X	X	X	X	X	X	X	X	X	X	X	X	X	X	X	X	X		X	X	X	X	X			X	X	X	X	X
	8'- 0	X	X	X	X	X	X	X	X	X	X	X	X	X	X	X	X	X		X	X	X	X	X			X	X	X	X	X
	10'- 0	X	X	X	X	X	X	X	X	X	X	X	X	X	X	X	X	X	X	X	X	X	X	X	X	X	X	X	X	X	X
STEM DIAMETER		1.12"	1.12"	1.12"	1.12"	1.12"	1.12"	1.12"	1.12"	1.12"	1.12"	1.12"	1.50"	1.12"	1.12"	1.12"	1.50"	1.50"	1.50"	1.12"	1.12"	1.50"	1.50"	1.50"	1.50"	2.00"	1.50"	1.50"	1.50"	1.50"	1.50"
WHEEL DIAMETER		10"	10"	10"	10"	10"	14"	24"	14"	14"	14"	18"	24"	14"	18"	18"	24"	24"	30"	18"	18"	24"	24"	30"	24"	30"	24"	24"	24"	30"	30"

- X INDICATES THE FRAME HEIGHT OPTIONS AVAILABLE WITH THE SPECIFIC GATE SIZES
- ** USE SCREW GATES SELECTED FROM THESE BASIC SIZE WITH EITHER FLUMES,ROUND PIPE OR PIPE ARCH INSTALLATIONS.

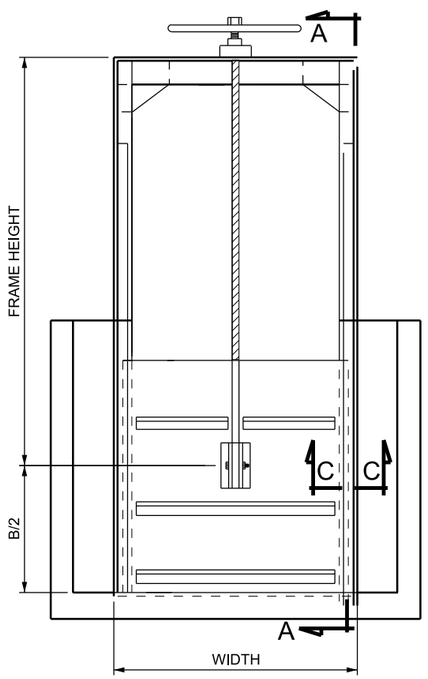

SCREW GATE INSTALLATION FOR FLUME OUTLET

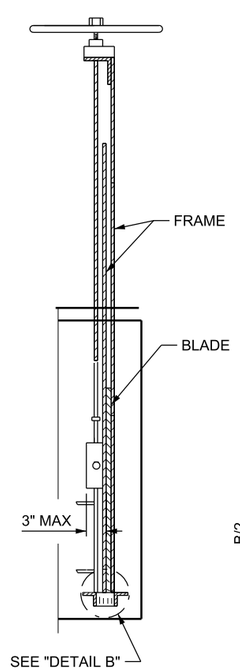

SECTION A-A

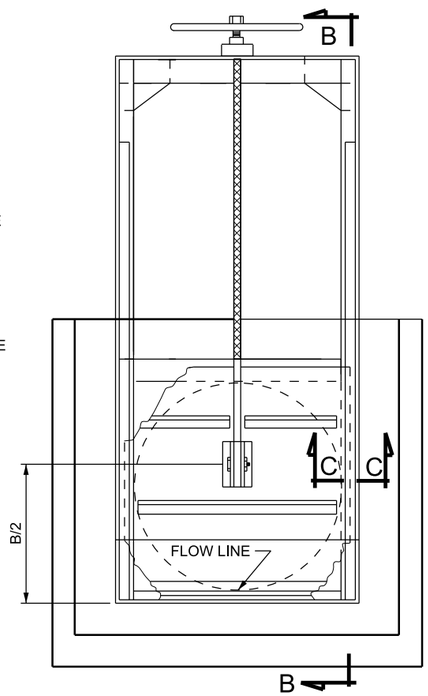

SCREW GATE INSTALLATION FOR PIPE OUTLET

ARCH PIPE INSTALLATION SIMILAR

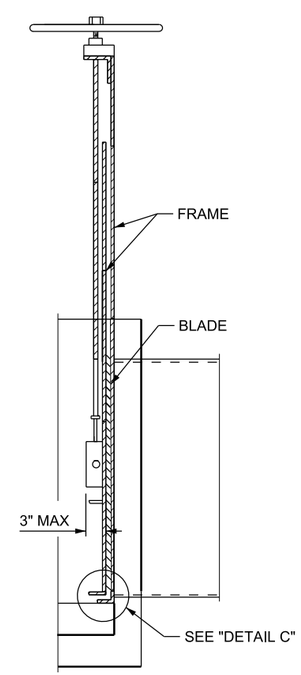

SECTION B-B

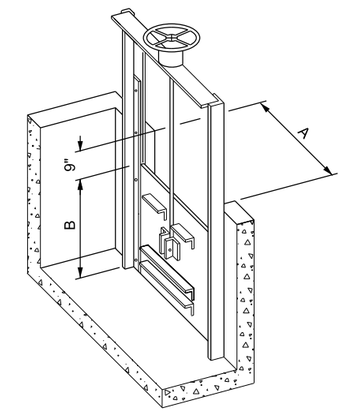

FLUME OUTLET

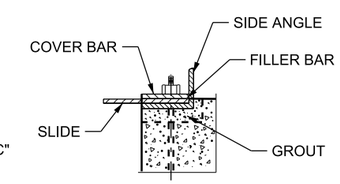

SECTION C-C

FLAT BACK SEAT OPTION

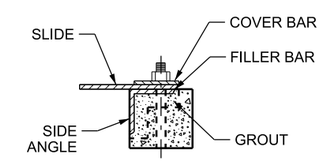

SECTION C-C

SPIGOT BACK SEAT OPTION

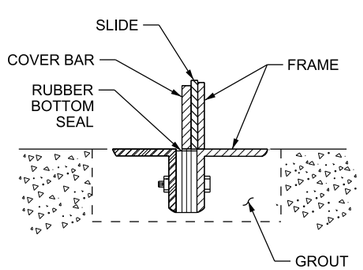

DETAIL B

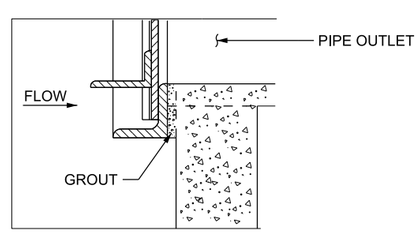

DETAIL C

TYPICAL WALL SILL INSTALLATION

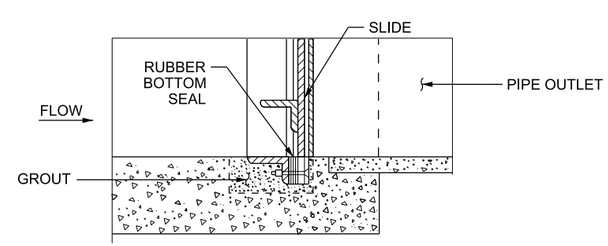

PIPE FLOOR SILL INSTALLATION

NOTES

1. USE LIFT GATE WHEN OPENING IS EQUAL TO OR EXCEEDS AN AREA OF 5 SQ FT.
2. GATES AND FRAMES: OF THE TYPE SHOWN ARE TO BE EITHER THE FLAT BACK SEAT OR SPIGOT BACK SEAT TYPES WITH A THROUGH FLUSH BOTTOM OPENING. EQUIVALENT GATE AND FRAME TYPES ACCEPTABLE, SUBJECT TO THE APPROVAL OF SHOP DRAWING BY THE ENGINEER.
3. DESIGN SLIDE GATES AND FRAMES FOR NOT LESS THAN 5 FT OF FACE PRESSURE ABOVE THE GATE OPENING AND ZERO BACK PRESSURE. SUBMIT TO THE ENGINEER FOR APPROVAL IN ALL CASES OF INSTALLATION. THE MANUFACTURER'S SPECIFICATIONS AND RECOMMENDATIONS ARE TO INCLUDE LIFTING DEVICE TYPE.

REVISIONS

NO.	DATE	APPR.	REMARKS

UTAH DEPARTMENT OF TRANSPORTATION
STANDARD DRAWINGS FOR ROAD AND BRIDGE CONSTRUCTION
SALT LAKE CITY, UTAH

RECOMMENDED FOR APPROVAL — JAN. 01, 2017 DATE
CHAIRMAN STANDARDS COMMITTEE APPROVED — JAN. 01, 2017 DATE
DEPUTY DIRECTOR

STANDARD DRAWING TITLE: STANDARD SCREW GATE AND FRAME

STD. DWG. NO. DB 5

DGN File:L:\Standard Drawings\Imperial\2017 Approved\1-All Drawings\DB05.dgn
28-NOV-2016

LEGEND:

PS = POINT OF SPIRAL
PT = POINT OF TANGENCY
PC = POINT OF CURVATURE
PSC = POINT OF SPRIAL TO CURVE
PCS = POINT OF CURVE TO SPIRAL
e = SUPERELEVATION - PERCENT
W = CROSS SECTIONAL DISTANCE IN FEET FROM AXIS OF ROTATION (NORMALLY THE CONTROL LINE) TO THE OUTER EDGE OF THE TRAFFIC LANE OR LANES.

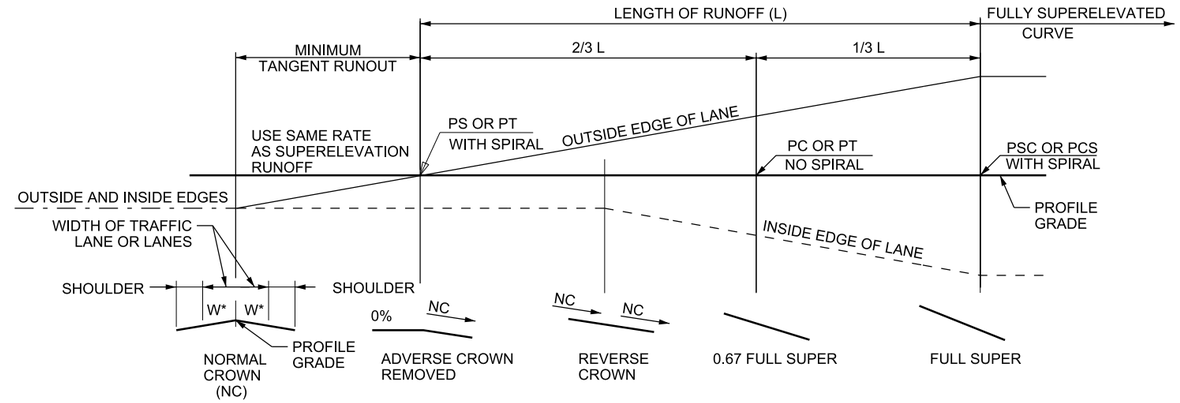

* USE THE LARGER OF THE TWO LANE WIDTHS

SUPERELEVATION - CROWNED ROAD

(NOTE H)

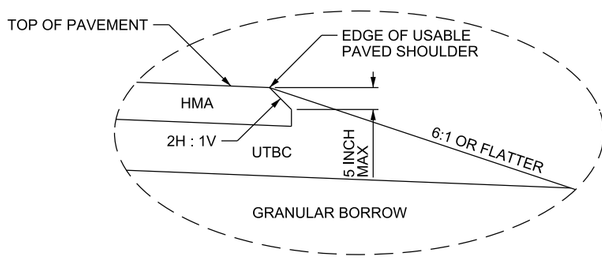

HMA EDGE OPTION 1

(NOTE I)

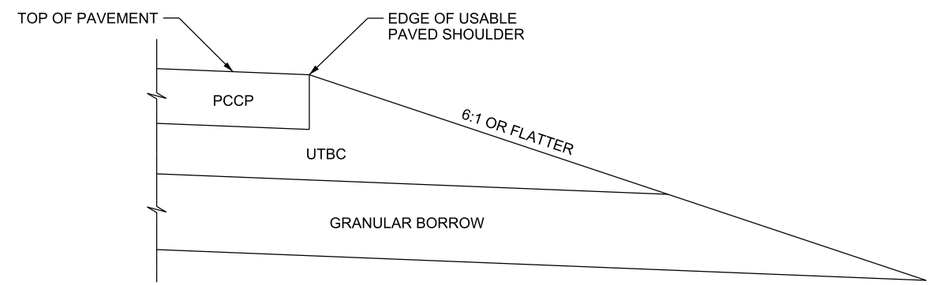

PCCP EDGE DETAIL

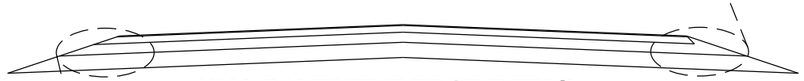

HMA PAVEMENT EDGE DETAIL

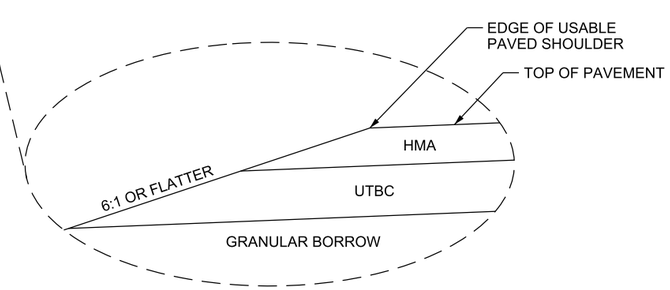

HMA EDGE OPTION 2

(NOTE I)

DESIGN NOTES:

A. USE THE AASHTO A POLICY ON GEOMETRIC DESIGN OF HIGHWAYS AND STREETS FOR LENGTH OF RUNOFF AND SUPERELEVATION RATE. USE A METHOD 5 DISTRIBUTION FOR HIGH SPEED HIGHWAYS (≥ 50 MPH). OTHER ROADWAYS MAY UTILIZE EITHER METHOD 2 OR METHOD 5 DEPENDING ON CONDITIONS AND DESIGN SOLUTION NEEDED.

B. SPIRALS WITH CURVES ARE NOT REQUIRED BUT MAY BE DESIRABLE UNDER HIGH SPEEDS AND SHARP CURVES. THE LENGTH OF SPIRAL IS EQUAL TO MINIMUM SUPERELEVATION RUNOFF LENGTHS WHEN A SPIRAL IS USED.

C. SUPERELEVATE SURFACED SHOULDERS AT SAME RATE AS TRAFFIC LANES. USE THE GREATER OF THE TRAVELED WAY WIDTH OR FUTURE TRAVELED WAY WIDTH (IF KNOWN) TO CALCULATE SUPERELEVATION RATES.

D. PLACE THE FOLLOWING INFORMATION ON THE CONSTRUCTION PLANS (SUPERELEVATION DIAGRAMS):
- RATE OF SUPERELEVATION
- BEGIN AND END OF TANGENT RUNOUT
- BEGIN AND END OF SUPERELEVATION RUNOFF IF SPIRALS ARE NOT USED
- HORIZONTAL ALIGNMENT EVENT POINTS SUCH AS PC, PT, AND PCC.

E. USE eMAX = 4 PERCENT IN URBAN, NON-FREEWAY DESIGNS.
USE eMAX = 6 PERCENT SUPERELEVATION IN ALL OTHER DESIGNS.

F. USE 2 PERCENT MINIMUM CROSS SLOPES.

G. PLACE ADVERSE SLOPE BREAKS AT SHOULDER OR LANE LINES. USE 6 PERCENT MAXIMUM ALGEBRAIC DIFFERENTIAL FOR SLOPE BREAKS AT SHOULDER AND LANE LINE. USE 4 PERCENT MAXIMUM ALGEBRAIC DIFFERENTIAL FOR SLOPE BREAKS AT LANE LINES.

H. REFER TO BA 1 AND BA 4D SERIES STD DWGS FOR CROSS SLOPE BREAKS WHEN PLACING BARRIER AND GUARDRAIL.

I. IDENTIFY WHICH EDGE DETAIL IS TO BE USED ON THE PROJECT PLAN SHEETS.

DESIGN ONLY DRAWING

REVISIONS			
NO.	DATE	APPR.	REMARKS

UTAH DEPARTMENT OF TRANSPORTATION
STANDARD DRAWINGS FOR ROAD AND BRIDGE CONSTRUCTION
SALT LAKE CITY, UTAH

RECOMMENDED FOR APPROVAL — JAN.01, 2017 DATE
CHAIRMAN: STANDARDS COMMITTEE APPROVED — JAN.01, 2017 DATE
DEPUTY DIRECTOR

SUPERELEVATION, WIDENING, AND EDGE DETAIL
STANDARD DRAWING TITLE

STD. DWG. NO.
DD 1

28-NOV-2016 DGN File:L:\Standard_Drawings\Imperial\2017 Approved\1-All Drawings\DD01.dgn

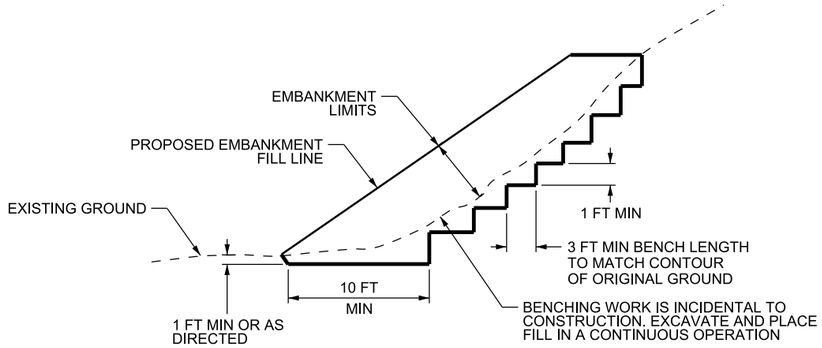

BENCHED SLOPE DETAIL

(NOTE E)

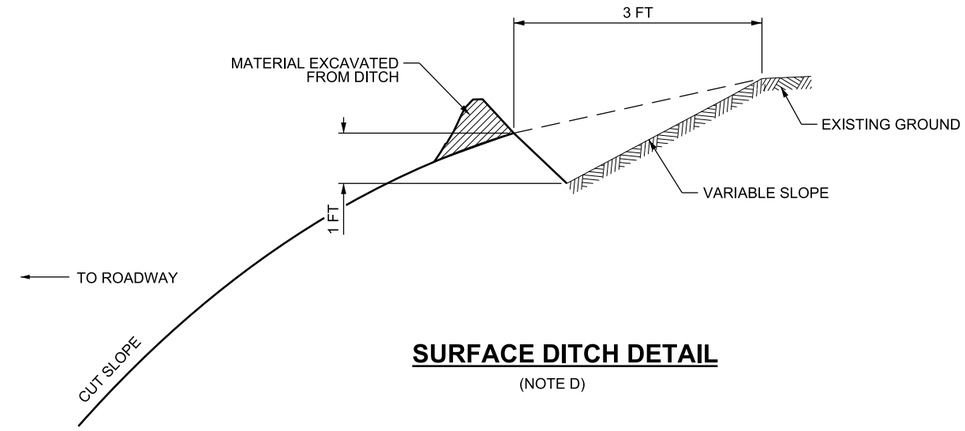

SURFACE DITCH DETAIL

(NOTE D)

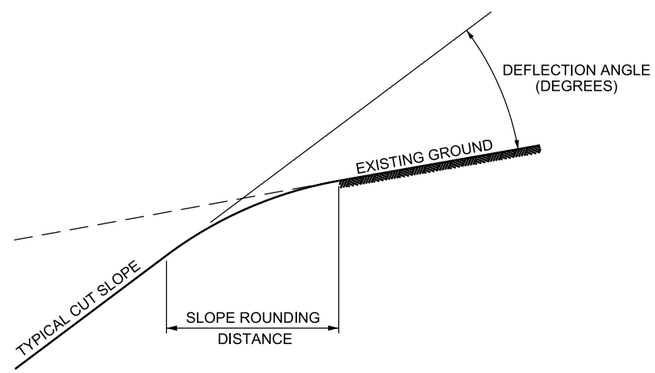

TABLE 1 - COMMON DEFLECTION ANGLE (DEGREES)

				EXISTING SLOPE									
	H:V			1:1.5	1:1	2:1	3:1	4:1	5:1	6:1	8:1	10:1	20:1
		% SLOPE		150%	100%	50%	33%	25%	20%	17%	13%	10%	5%
			DEG	56	45	27	18	14	11	9	7	6	3
PROPOSED SLOPE	1:2	200%	63	7	18	37	45	49	52	54	56	58	61
	1:1.5	150%	56	-	11	30	38	42	45	47	49	51	53
	1:1	100%	45	-	-	18	27	31	34	36	38	39	42
	2:1	50%	27	-	-	-	8	13	15	17	19	21	24
	3:1	33%	18	-	-	-	-	4	7	9	11	13	16
	4:1	25%	14	-	-	-	-	-	3	5	7	8	11

TABLE 2 - SLOPE ROUNDING DISTANCE (FT)

		SLOPE HEIGHT (FT) (NOTE G)			
		5-10	>10-15	>15-20	>20
DEFLECTION ANGLE	<10°	NO SLOPE ROUNDING NEEDED			
	10°-20°	2	4	5	6
	20°-30°	4	8	10	12
	30°-40°	6	12	15	18
	40°+	8	16	20	24

CUT SLOPE ROUNDING DETAIL

(NOTE F)

DESIGN NOTES:

A. USE THE AASHTO A POLICY ON GEOMETRIC DESIGN OF HIGHWAYS AND STREETS FOR DESIGN OF ROADWAY ELEMENTS NOT SHOWN ON THIS STANDARD DRAWING.

B. USE THE AASHTO ROADSIDE DESIGN GUIDE AND STD DWG DD 17 FOR CLEAR ZONE REQUIREMENTS. CLEAR ZONE MAY EXTEND INTO CUT OR FILL SLOPES.

C. TRANSITION FROM FLAT TO STEEPER CUT AND FILL SLOPES IN SUFFICIENT DISTANCE TO PROVIDE A NATURAL PLEASING APPEARANCE.

D. INSTALL SURFACE DITCH (OPTIONAL) WHEN SHEET FLOW DRAINAGE IS CONCENTRATED TOWARDS AND HAS POTENTIAL TO ERODE THE CUT SLOPE OR CREATE OTHER HAZARDS. DRAIN SURFACE DITCH TO NATURAL DRAINAGE OR ROADSIDE DITCH. PROVIDE OTHER MEASURES TO PROTECT CUT SLOPES OR CAUSE OTHER HAZARDS IF SURFACE DITCH IS OMITTED.

E. BENCH EXISTING SLOPE PER CENTRAL GEOTECHNICAL RECOMMENDATIONS.

F. FIND THE COMMON DEFLECTION ANGLE IN TABLE 1 AND THEN USE TABLE 2 TO FIND THE SLOPE ROUNDING DISTANCE FOR CUT SLOPE ROUNDING DETAIL. THE GREATER NUMBER OF MULTIPLE DISTANCES MAY BE USED TO AVOID FREQUENT ROUNDING DISTANCE CHANGES.

G. THE CUT SLOPE HEIGHT IS FROM THE BOTTOM TO THE TOP OF THE CUT BEFORE ROUNDING.

DESIGN ONLY DRAWING

REVISIONS

NO.	DATE	APPR.	REMARKS

UTAH DEPARTMENT OF TRANSPORTATION
STANDARD DRAWINGS FOR ROAD AND BRIDGE CONSTRUCTION
SALT LAKE CITY, UTAH

RECOMMENDED FOR APPROVAL — JAN.01.2017 DATE
CHAIRMAN STANDARDS COMMITTEE APPROVED — JAN.01.2017 DATE
DEPUTY DIRECTOR — DATE

SURFACE DITCH AND BENCHED SLOPE DETAILS

STANDARD DRAWING TITLE

STD. DWG. NO.
DD 2

DGN File: L:\Standard Drawings\Imperial\2017 Approved\1-All Drawings\DD02.dgn
28-NOV-2016

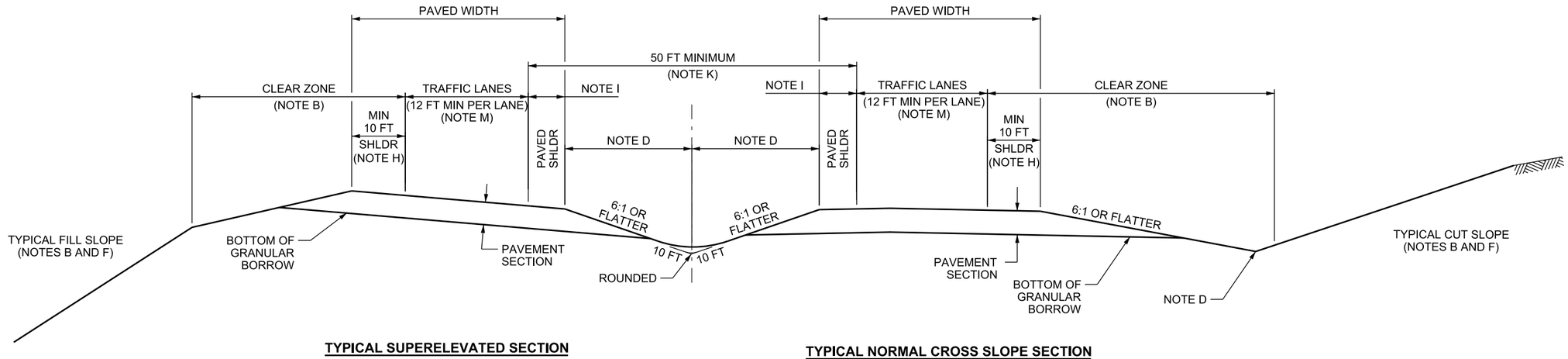

TYPICAL SUPERELEVATED SECTION

TYPICAL NORMAL CROSS SLOPE SECTION

FREEWAY

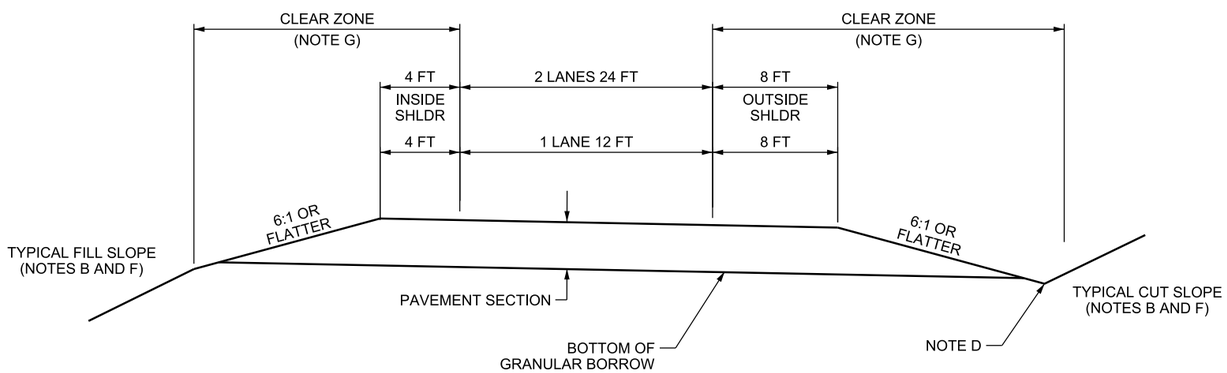

RAMP

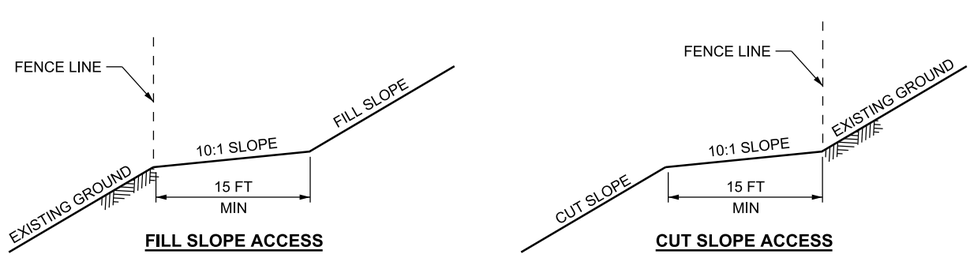

FILL SLOPE ACCESS

CUT SLOPE ACCESS

MAINTENANCE ACCESS DETAIL

(NOTE J)

DESIGN NOTES:

A. USE THE AASHTO A POLICY ON GEOMETRIC DESIGN OF HIGHWAYS AND STREETS FOR DESIGN OF ROADWAY ELEMENTS NOT SHOWN ON THIS STANDARD DRAWING.

B. USE THE AASHTO ROADSIDE DESIGN GUIDE AND STD DWG DD 17 FOR CLEAR ZONE REQUIREMENTS. CLEAR ZONE MAY EXTEND INTO CUT OR FILL SLOPES.

C. STANDARDS SHOWN ARE MINIMUM VALUES. EXCEED STANDARDS IF CONDITIONS PERMIT.

D. PROVIDE MEASURES TO CAPTURE AND CONVEY DRAINAGE AWAY FROM PAVEMENT SECTION. MAINTAIN A MINIMUM OF 1 FT VERTICAL DISTANCE BELOW THE BOTTOM OF THE GRANULAR BORROW LAYER TO THE BOTTOM OF THE CUT DITCH OR FILL SLOPE. NOTIFY MATERIALS OF ANY IMPACTS TO PAVEMENT SECTION SATURATION.

E. TRANSITION FROM FLAT TO STEEPER CUT AND FILL SLOPES IN SUFFICIENT DISTANCE TO PROVIDE A NATURAL PLEASING APPEARANCE.

F. DO NOT EXCEED 2H:1V OR STEEPER SLOPES WITHOUT APPROVAL OF CENTRAL GEOTECHNICAL DIVISION.

G. DESIGN SPEED CHANGES THROUGHOUT LENGTH OF RAMP (SEE STD DWG DD 4 AND DD 5); USE APPLICABLE CLEAR ZONE. SEE STD DWG DD 17 FOR ADDITIONAL INFORMATION.

H. USE A 12 FT MIN OUTSIDE SHOULDER WHEN HEAVY TRUCK TRAFFIC EXCEEDS 250 DDHV.

I. USE 4 FT INSIDE SHOULDERS ON TWO LANES (SINGLE DIRECTION) AND 10 FT INSIDE SHOULDERS ON 3 OR MORE LANES (SINGLE DIRECTION).

J. PROVIDE MAINTENANCE ACCESS OF 15 FT MIN WIDTH ON A 10:1 OR FLATTER SLOPE FROM TOE (FILL) / TOP (CUT) OF SLOPE TO FENCE LINE UNLESS OTHERWISE APPROVED BY THE REGION TRAFFIC ENGINEER FOR SLOPES STEEPER THAN 6:1. PROVIDE ACCESS ZONE WITHIN EITHER RIGHT-OF -WAY OR EASEMENT LIMITS.

K. POSITIVE SEPARATION IS REQUIRED FOR MEDIAN WIDTHS LESS THAN 50 FT. POSITIVE SEPARATION IS ANY TYPE OF APPROVED BARRIER SYSTEM. POSITIVE SEPARATION MAY BE USED FOR MEDIAN WIDTHS ≥ 50 FT.

L. USE A 0.5 MIN PERCENT PROFILE GRADE FOR ALL ROADWAY SECTIONS. PROFILE GRADE MAY BE REDUCED TO NO LESS THAN 0.3 PERCENT UPON APPROVAL FROM CENTRAL HYDRAULICS DIVISION.

M. SEE STD DWG SN 19B FOR LANE WIDTH VARIATIONS WITH PREFERENTIAL LANES. THE 12 FT MINIMUM LANE WIDTH MAY BE REDUCED (11 FT MIN) UPON APPROVAL OF THE REGION TRAFFIC ENGINEER.

DESIGN ONLY DRAWING

REVISIONS

NO.	DATE	APPR.	REMARKS

UTAH DEPARTMENT OF TRANSPORTATION
STANDARD DRAWINGS FOR ROAD AND BRIDGE CONSTRUCTION
SALT LAKE CITY, UTAH

RECOMMENDED FOR APPROVAL — JAN.01.2017 DATE
CHAIRMAN STANDARDS COMMITTEE APPROVED — JAN.01.2017 DATE
DEPUTY DIRECTOR

STANDARD DRAWING TITLE: GEOMETRIC DESIGN FOR FREEWAYS

STD. DWG. NO. DD 3

28-NOV-2016 DGN File: L:\Standard Drawings\Imperial\2017 Approved\1-All Drawings\DD03.dgn

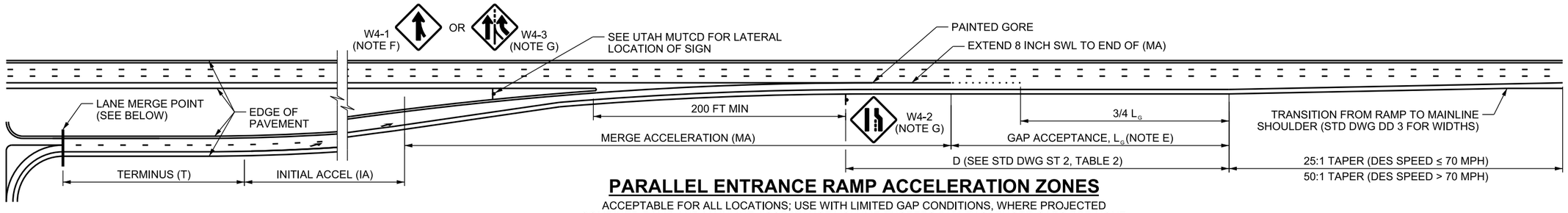

PARALLEL ENTRANCE RAMP ACCELERATION ZONES

ACCEPTABLE FOR ALL LOCATIONS; USE WITH LIMITED GAP CONDITIONS, WHERE PROJECTED COMBINED RAMP AND MAINLINE ACCEPTANCE VOLUME EXCEEDS 2400 PASSENGER CARS PER HOUR

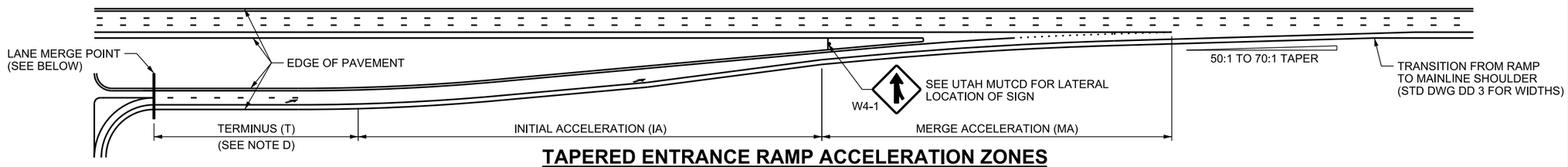

TAPERED ENTRANCE RAMP ACCELERATION ZONES

ACCEPTABLE IN NORMAL GAP CONDITIONS WHERE PROJECTED COMBINED RAMP AND MAINLINE ACCEPTANCE VOLUME IS LESS THAN 2400 PASSENGER CARS PER HOUR

RAMP DOUBLE LANE DROP

(MAINLINE NOT SHOWN FOR CLARITY)

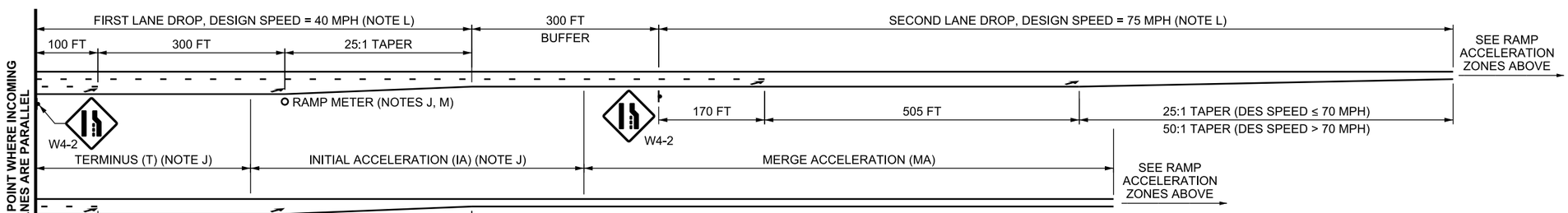

RAMP SINGLE LANE DROP

(MAINLINE NOT SHOWN FOR CLARITY)

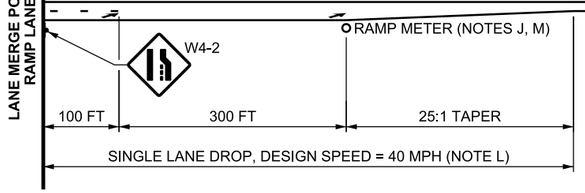

RAMP ACCELERATION LENGTH, L_{acc} (FT)

ZONE	DESIGN SPEED, V (MPH)	SPEED RANGE	V'a	SPEED REACHED, Va (MPH)	ACCEL RATE, a (FT/S²)	LEVEL GRADE, L_{acc} (FT)	UPGRADE, L_{acc} (FT) ADJ. FACTOR	3% - 4%	ADJ. FACTOR	5% - 6%	DOWNGRADE, L_{acc} (FT) ADJ. FACTOR	3% - 4%	ADJ. FACTOR	5% - 6%
T	40	0-40	0	31	2.55	410	1.3	533	1.5	615	0.7	287	0.6	246
		15-40	14	31	2.43	345		449		518		242		207
		20-40	18	31	2.37	295		384		443		207		177
		25-40	22	31	2.34	225		293		338		158		135
		30-40	26	31	2.28	140		182		210		98		84
IA	55	40-55	31	43	1.81	535	1.45	776	2.05	1097	0.625	335	0.6	321
MA	70	55-70	43	53	1.55	670	1.85	1240	3.2	2144	0.575	386	0.525	352
	75	55-75	43	55	1.50	850		1573		2720		489		447
	80	55-80	43	60	1.49	1275		2359		4080		734		670
	85	55-85	43	64	1.48	1640		3034		5248		943		861

$$L_{acc} = \frac{(1.47\ V_a)^2 - (1.47\ V'_a)^2}{2a}$$

WHERE a = ACCELERATION RATE (ft/s²) AND V'a = INITIAL SPEED (MPH)

DESIGN NOTES:

A. USE THE AASHTO A POLICY ON GEOMETRIC DESIGN OF HIGHWAYS AND STREETS FOR DESIGN OF ROADWAY ELEMENTS NOT SHOWN ON THIS STANDARD DRAWING.

B. USE THE AASHTO ROADSIDE DESIGN GUIDE AND STD DWG DD 17 FOR CLEAR ZONE REQUIREMENTS.

C. USE WB-67 FOR TURNING RADIUS FOR ALL TURNS UNLESS APPROVED BY THE REGION TRAFFIC ENGINEER.

D. INITIAL SPEED (V'a) IS DETERMINED BY LOWEST ENTRY SPEED OF ENTRANCE DIRECTIONS AS CONTROLLED BY CURVE RADIUS AND SUPERELEVATION. USE A 15 MPH INITIAL SPEED IN MOST CASES.

E. USE A 1200 FT GAP ACCEPTANCE LENGTH IF COMBINED RAMP AND MAINLINE ACCEPTANCE LANE VOLUME IS PROJECTED TO EXCEED 2400 PASSENGER CARS PER HOUR. OTHERWISE, USE A 500 FT LENGTH. SEE THE HIGHWAY CAPACITY MANUAL FOR ADDITIONAL INFORMATION.

F. USE MERGE SIGN (W4-1) WHEN THE FOLLOWING CONDITIONS ARE MET:
1. SINGLE LANE PARALLEL ENTRANCE RAMP
2. LESS THAN 1200 FT (SEE NOTE E) GAP ACCEPTANCE IS USED
- DO NOT USE EITHER THE LANE ENDS SIGN (W4-2R) OR THE ADDED LANE SIGN (W4-3) WHEN USING THE W4-1 SIGN

G. USE ADDED LANE SIGN (W4-3) WHEN THE GAP ACCEPTANCE IS GREATER THAN OR EQUAL TO 1200 FT (SEE NOTE E)
- DO NOT PLACE LANE ENDS (W4-2) SIGN WITHIN 200 FT OF THE PHYSICAL GORE
- PLACE LANE ENDS SIGN (W4-2) ONLY WHEN USING THE W4-3 SIGN

H. DO NOT DROP MORE THAN TWO LANES ON ANY RAMP. CONTINUE THE ADDITIONAL LANE(S) TO MAINLINE BEYOND THE GAP ACCEPTANCE LENGTH AND DROP PER STD DWG ST 1 AND THE UTAH MANUAL ON UNIFORM TRAFFIC CONTROL DEVICES OR DROP AT NEXT EXIT AS AN AUXILIARY LANE WHEN THREE OR MORE LANES ARE PRESENT ON THE RAMP. SEE THE RAMPS SECTION OF THE AASHTO A POLICY ON GEOMETRIC DESIGN OF HIGHWAYS AND STREETS FOR ADDITIONAL GUIDANCE.

J. RAMP METER:
- PLACE THE RAMP METER STOP LINE AT THE CALCULATED STORAGE PER AT SERIES STD DWGS WHEN RAMP METER USED
- USE A STOP CONDITION TO CALCULATE ACCELERATION DISTANCE FROM RAMP METER STOP LINE WHEN RAMP METER USED
- VERIFY RAMP METER STORAGE LENGTHS WITH CENTRAL TRAFFIC OPERATIONS DIVISION

K. BEGIN (EXIT RAMPS) OR END (ENTRANCE RAMPS) INDEPENDENT VERTICAL ALIGNMENTS AT POINT PARALLEL TO MAINLINE ALIGNMENT WHERE VERTICAL ALIGNMENTS TIE TOGETHER.

L. DISTANCES FOR LANE DROP LENGTHS WERE DERIVED USING THE FOLLOWING EQUATION:
DIST = 1.47 V (DRT + MT), WHERE V = DESIGN SPEED, DRT = DETECTION AND RECOGNITION TIME (2.5 SEC), AND MT = MANUEVER TIME (VARIES BETWEEN 3.5 TO 4.5 SEC DEPENDING ON SPEED)

M. SEE ST SERIES STD DWGS FOR PAVEMENT MARKINGS AND RAMP METER INFORMATION.

DESIGN ONLY DRAWING

REVISIONS

NO.	DATE	APPR.	REMARKS

UTAH DEPARTMENT OF TRANSPORTATION
STANDARD DRAWINGS FOR ROAD AND BRIDGE CONSTRUCTION
SALT LAKE CITY, UTAH

RECOMMENDED FOR APPROVAL — JAN.01, 2017 DATE
CHAIRMAN STANDARDS COMMITTEE APPROVED — JAN.01, 2017 DATE
DEPUTY DIRECTOR

STANDARD DRAWING TITLE: ENTRANCE RAMPS

STD. DWG. NO. DD 4

DGN File: L:\Standard Drawings\Imperial\2017 Approved\1-All Drawings\DD04.dgn
28-NOV-2016

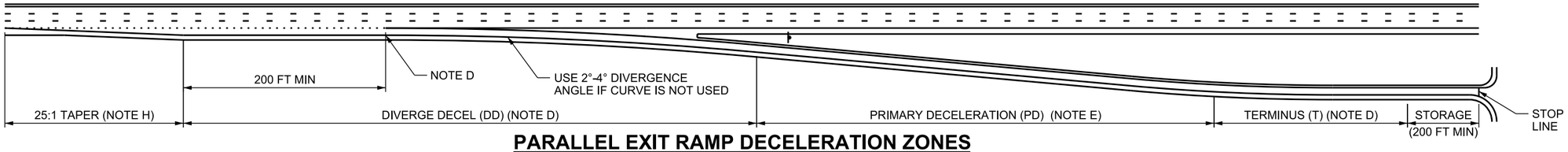

PARALLEL EXIT RAMP DECELERATION ZONES

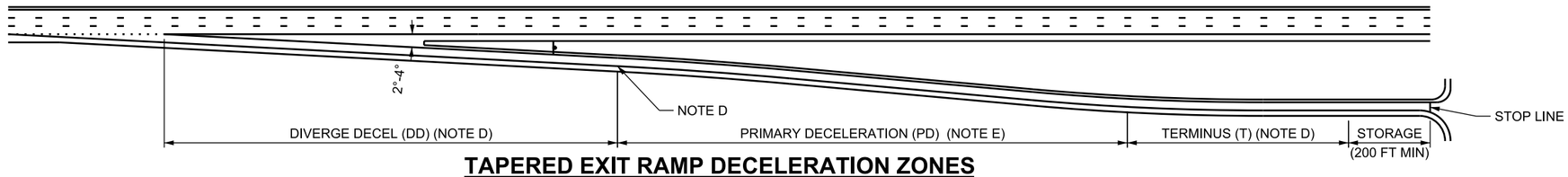

TAPERED EXIT RAMP DECELERATION ZONES

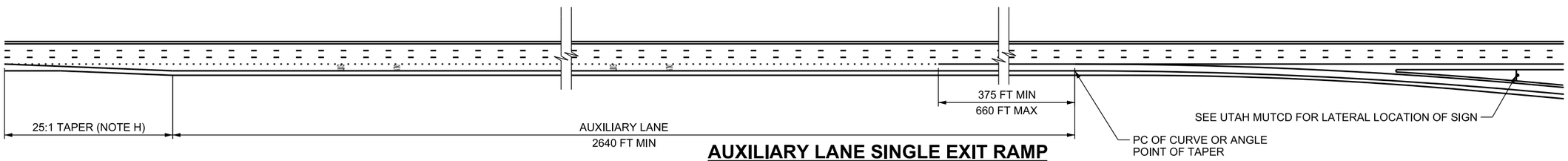

AUXILIARY LANE SINGLE EXIT RAMP

AUXILIARY LANE DUAL EXIT RAMP

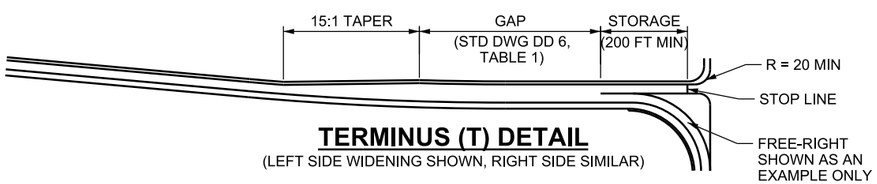

TERMINUS (T) DETAIL

(LEFT SIDE WIDENING SHOWN, RIGHT SIDE SIMILAR)

RAMP DECELERATION LENGTH, L_{dec} (FT)

ZONE	DESIGN SPEED, V (MPH)	SPEED RANGE	V'a	SPEED REACHED, Va (MPH)	DECEL RATE, d (FT/S²)	LEVEL GRADE, L_{dec} (FT)	UPGRADE, L_{dec} (FT)				DOWNGRADE, L_{dec} (FT)			
							ADJ. FACTOR	3% - 4%	ADJ. FACTOR	5% - 6%	ADJ. FACTOR	3% - 4%	ADJ. FACTOR	5% - 6%
T	40	40-0	0	36	4.29	325	0.9	293	0.8	260	1.2	390	1.35	439
		40-15	14	36	4.1	290		261		232		348		392
		40-20	18	36	3.96	265		239		212		318		358
		40-25	22	36	3.73	235		212		188		282		317
		40-30	26	36	3.35	200		180		160		240		270
PD	55	55-40	31	48	3.82	285	0.9	257	0.8	228	1.2	342	1.35	385
DD	70	70-55	43	58	3.95	290	0.9	261	0.8	232	1.2	348	1.35	392
	75	75-55	43	61	4.50	340		306		272		408		459
	80	80-55	43	66	5.22	425		383		340		510		574
	85	85-55	43	70	5.84	480		432		384		576		648

$$L_{dec} = \frac{(1.47\ V_a)^2 - (1.47\ V'_a)^2}{2d}$$

WHERE d = DECELERATION RATE (ft/s²) AND V'a = INITIAL SPEED (MPH)

DESIGN NOTES:

A. USE THE AASHTO A POLICY ON GEOMETRIC DESIGN OF HIGHWAYS AND STREETS FOR DESIGN OF ROADWAY ELEMENTS NOT SHOWN ON THIS STANDARD DRAWING.

B. USE THE AASHTO ROADSIDE DESIGN GUIDE AND STD DWG DD 17 FOR CLEAR ZONE REQUIREMENTS.

C. USE WB-67 FOR TURNING RADIUS FOR ALL TURNS UNLESS APPROVED BY THE REGION TRAFFIC ENGINEER.

D. EXTEND DIVERGE DECELERATION DISTANCE A MINIMUM OF 100 FT PAST PHYSICAL GORE. INITIAL SPEED (V'a) FOR DETERMINING (DD) IS DEPENDENT ON MAXIMUM SPEED OF CURVE RADIUS AND SUPERELEVATION. DESIGN ALL CURVES TO MEET OR EXCEED THE MINIMUM RADIUS FOR DESIGN SPEED AND SUPERELEVATION.

E. MEASURE TERMINUS FROM THE END OF THE CALCULATED STORAGE (200 FT MIN). USE THE 40-0 MPH RANGE TO CALCULATE (T) IN MOST CASES.

F. MEASURE PRIMARY DECELERATION (PD) FROM THE END OF THE TERMINUS (T) TO THE END OF THE DIVERGE DECELERATION (DD). VALUES SHOWN IN TABLE ARE MINIMUM LENGTHS AND IN MOST CASES THE ACTUAL VALUE WILL BE LONGER BASED ON THE ADJACENT LENGTHS OF (DD) AND (T).

G. USE MINIMUM RADIUS (CENTER OF RAMP LANES) OF 10 MPH LESS THAN MAINLINE DESIGN SPEED AND SUPERELEVATION OF MAINLINE ADJACENT TO RAMP.

H. OMIT 25:1 TAPER IF AUXILIARY LANE EXTENDS TO PREVIOUS INTERCHANGE.

I. SEE ST SERIES STD DWGS FOR PAVEMENT MARKINGS.

J. BEGIN (EXIT RAMPS) OR END (ENTRANCE RAMPS) INDEPENDENT VERTICAL ALIGNMENTS AT POINT PARALLEL TO MAINLINE ALIGNMENT WHERE VERTICAL ALIGNMENTS TIE TOGETHER.

DESIGN ONLY DRAWING

REVISIONS

NO.	DATE	APPR.	REMARKS

UTAH DEPARTMENT OF TRANSPORTATION
STANDARD DRAWINGS FOR ROAD AND BRIDGE CONSTRUCTION
SALT LAKE CITY, UTAH

RECOMMENDED FOR APPROVAL — JAN.01.2017 DATE
CHAIRMAN STANDARDS COMMITTEE APPROVED — JAN.01.2017 DATE
DEPUTY DIRECTOR — DATE

STANDARD DRAWING TITLE: EXIT RAMPS

STD. DWG. NO. DD 5

DGN File: L:\Standard Drawings\Imperial\2017 Approved\1-All Drawings\DD05.dgn
28-NOV-2016

LANE DROP BEYOND THE INTERSECTION

TURN LANE DEFINITIONS (RIGHT SHOWN)

(DECELERATION + STORAGE = GAP + 8 INCH SWL) (NOTE G)
(SEE NOTE E FOR DUAL AND TRIPLE TURNS)

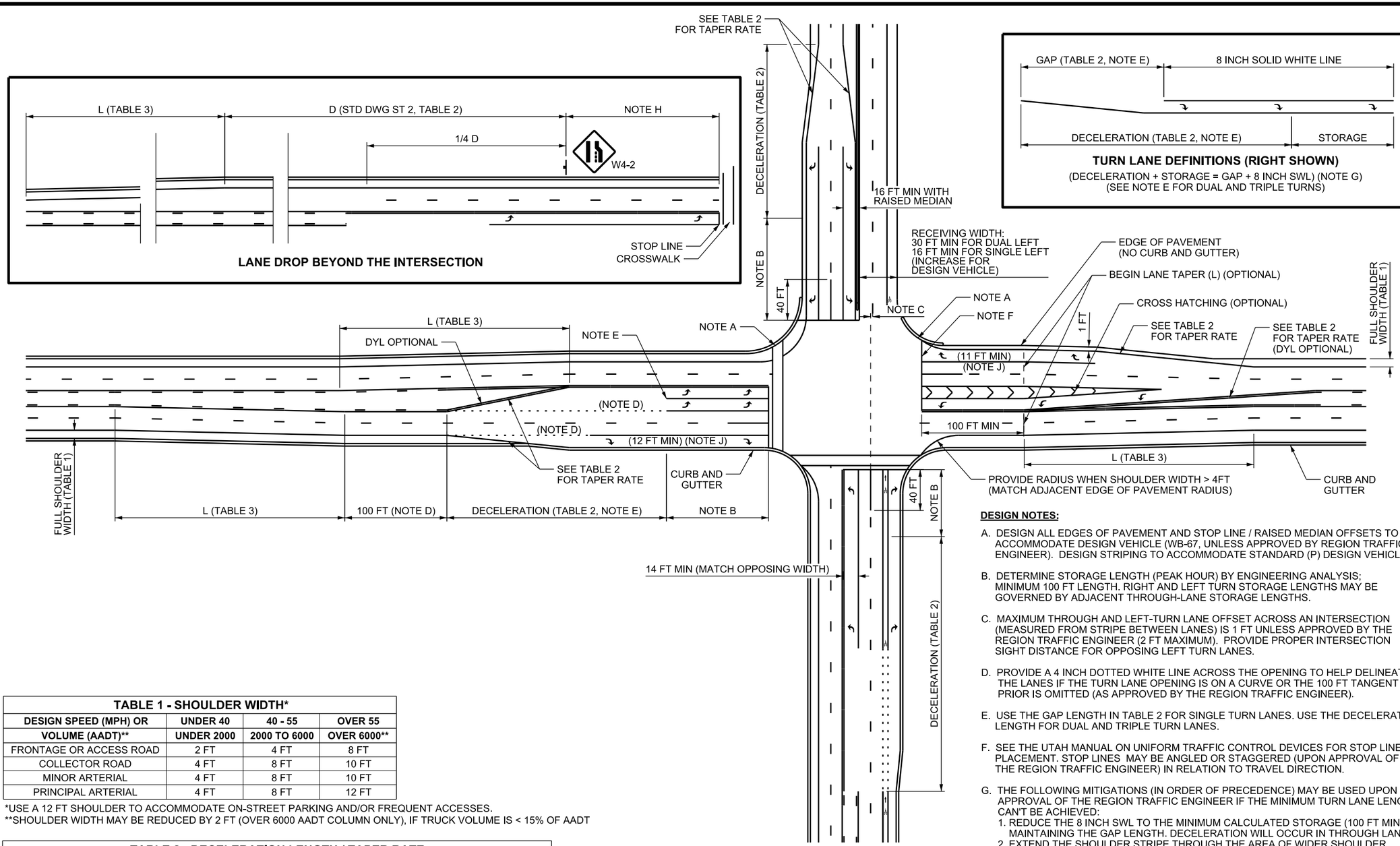

TABLE 1 - SHOULDER WIDTH*

DESIGN SPEED (MPH) OR VOLUME (AADT)**	UNDER 40 UNDER 2000	40 - 55 2000 TO 6000	OVER 55 OVER 6000**
FRONTAGE OR ACCESS ROAD	2 FT	4 FT	8 FT
COLLECTOR ROAD	4 FT	8 FT	10 FT
MINOR ARTERIAL	4 FT	8 FT	10 FT
PRINCIPAL ARTERIAL	4 FT	8 FT	12 FT

*USE A 12 FT SHOULDER TO ACCOMMODATE ON-STREET PARKING AND/OR FREQUENT ACCESSES.
**SHOULDER WIDTH MAY BE REDUCED BY 2 FT (OVER 6000 AADT COLUMN ONLY), IF TRUCK VOLUME IS < 15% OF AADT

TABLE 2 - DECELERATION LENGTH / TAPER RATE

DESIGN SPEED (MPH)	TAPER RATE	ENTRY SPEED (MPH)	DECEL LENGTH (FT)	DOWNGRADE -3%	DOWNGRADE -6%	DOWNGRADE -9%	UPGRADE 3%	UPGRADE 6%	UPGRADE 9%	GAP (FT)
30	8:1	28	130	153	185	234	113	100	90	100
35		32	170	199	241	306	148	131	117	
40		36	215	252	305	387	187	165	149	
45		40	265	311	376	477	231	204	183	
50	10:1	44	325	376	455	577	279	247	222	160
55		48	385	447	542	687	332	294	264	
60	15:1	52	450	525	636	806	389	345	309	190
65		55	505	587	711	902	435	386	346	

L_{DEC} = 1.075 x (ENTRY SPEED / a), WHERE a=6.5 FT/S

L_{DEC} ON GRADE = ENTRY SPEED^2 / 30 (a/32.2 ± G), WHERE a=6.5 FT/S^2

GAP = L / 3 (W), WHERE L = TAPER LENGTH IN FEET AND W = 9 FT, WITH A 100 FT MIN LENGTH

TABLE 3

SPEED	FORMULA	RATE
LESS THAN 40 MPH	$L = \frac{WS^2}{60}$	$\frac{S^2}{60}$:1
45 MPH AND GREATER	L= WS	S:1

WHERE:
L = TAPER LENGTH IN FEET
W = WIDTH OF OFFSET IN FEET
S = POSTED SPEED IN MPH

DESIGN NOTES:

A. DESIGN ALL EDGES OF PAVEMENT AND STOP LINE / RAISED MEDIAN OFFSETS TO ACCOMMODATE DESIGN VEHICLE (WB-67, UNLESS APPROVED BY REGION TRAFFIC ENGINEER). DESIGN STRIPING TO ACCOMMODATE STANDARD (P) DESIGN VEHICLES.

B. DETERMINE STORAGE LENGTH (PEAK HOUR) BY ENGINEERING ANALYSIS; MINIMUM 100 FT LENGTH. RIGHT AND LEFT TURN STORAGE LENGTHS MAY BE GOVERNED BY ADJACENT THROUGH-LANE STORAGE LENGTHS.

C. MAXIMUM THROUGH AND LEFT-TURN LANE OFFSET ACROSS AN INTERSECTION (MEASURED FROM STRIPE BETWEEN LANES) IS 1 FT UNLESS APPROVED BY THE REGION TRAFFIC ENGINEER (2 FT MAXIMUM). PROVIDE PROPER INTERSECTION SIGHT DISTANCE FOR OPPOSING LEFT TURN LANES.

D. PROVIDE A 4 INCH DOTTED WHITE LINE ACROSS THE OPENING TO HELP DELINEATE THE LANES IF THE TURN LANE OPENING IS ON A CURVE OR THE 100 FT TANGENT PRIOR IS OMITTED (AS APPROVED BY THE REGION TRAFFIC ENGINEER).

E. USE THE GAP LENGTH IN TABLE 2 FOR SINGLE TURN LANES. USE THE DECELERATION LENGTH FOR DUAL AND TRIPLE TURN LANES.

F. SEE THE UTAH MANUAL ON UNIFORM TRAFFIC CONTROL DEVICES FOR STOP LINE PLACEMENT. STOP LINES MAY BE ANGLED OR STAGGERED (UPON APPROVAL OF THE REGION TRAFFIC ENGINEER) IN RELATION TO TRAVEL DIRECTION.

G. THE FOLLOWING MITIGATIONS (IN ORDER OF PRECEDENCE) MAY BE USED UPON APPROVAL OF THE REGION TRAFFIC ENGINEER IF THE MINIMUM TURN LANE LENGTHS CAN'T BE ACHIEVED:
1. REDUCE THE 8 INCH SWL TO THE MINIMUM CALCULATED STORAGE (100 FT MIN), MAINTAINING THE GAP LENGTH. DECELERATION WILL OCCUR IN THROUGH LANES
2. EXTEND THE SHOULDER STRIPE THROUGH THE AREA OF WIDER SHOULDER.

H. DISTANCE IS THE GREATER OF THE PRECEDING CALCULATED THROUGH OR DUAL TURN MOVEMENT STORAGE (THE STORAGE OF THE THROUGH LANES OR TURN LANES FLOWING INTO THESE LANES) (150 FT MIN).

I. PROVIDE A TWO-WAY LEFT TURN LANE CONNECTING ADJACENT ACCESSES WHEN OPPOSING TAPERS OVERLAP OR AS DIRECTED BY THE REGION TRAFFIC ENGINEER.

J. RIGHT TURN LANE WIDTHS MAY BE REDUCED (10 FT MIN) UPON APPROVAL OF THE REGION TRAFFIC ENGINEER.

K. PROVIDE A MINIMUM 100 FT TANGENT APPROACH SECTION PRIOR TO STOP LINES. USE THE SAME ENTRANCE AND EXIT BEARINGS FOR OPPOSING INTERSECTION DIRECTIONS.

L. USE THE AASHTO A POLICY ON GEOMETRIC DESIGN OF HIGHWAYS AND STREETS FOR DESIGN OF ROADWAY ELEMENTS NOT SHOWN ON THIS STANDARD DRAWING.

M. USE THE AASHTO ROADSIDE DESIGN GUIDE AND STD DWG DD 17 FOR CLEAR ZONE REQUIREMENTS.

DESIGN ONLY DRAWING

REVISIONS

NO.	DATE	APPR.	REMARKS

UTAH DEPARTMENT OF TRANSPORTATION
STANDARD DRAWINGS FOR ROAD AND BRIDGE CONSTRUCTION
SALT LAKE CITY, UTAH

RECOMMENDED FOR APPROVAL — JAN.01, 2017 DATE
CHAIRMAN STANDARDS COMMITTEE APPROVED — JAN.01, 2017 DATE
DEPUTY DIRECTOR

STANDARD DRAWING TITLE: INTERSECTION GEOMETRICS

STD. DWG. NO. DD 6

DGN File: L:\Standard Drawings\Imperial\2017 Approved\1-All Drawings\DD06.dgn
28-NOV-2016

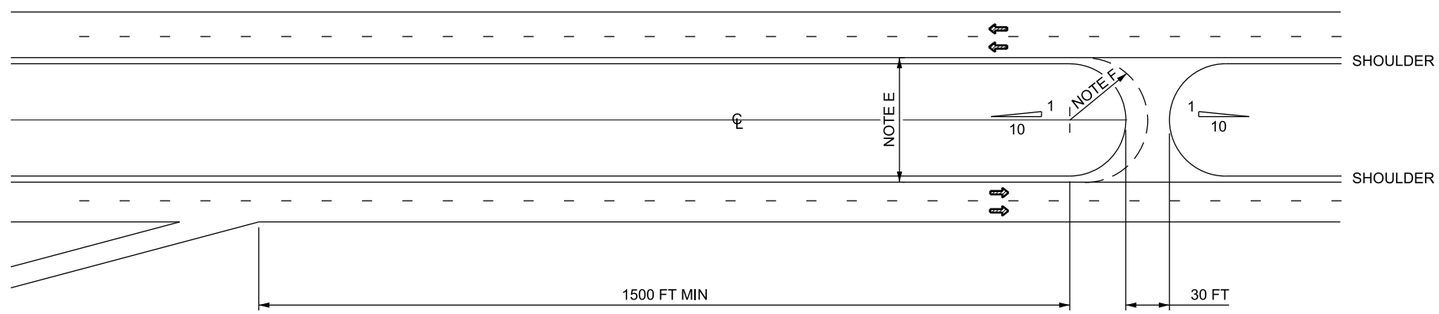

SINGLE CROSSOVER

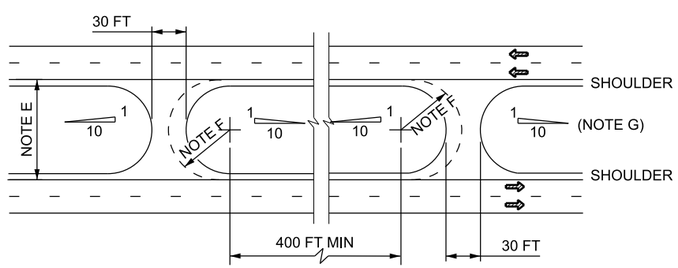

DOUBLE CROSSOVER

(NOTE M)

DESIGN NOTES:

A. USE THE AASHTO A POLICY ON GEOMETRIC DESIGN OF HIGHWAYS AND STREETS FOR DESIGN OF ROADWAY ELEMENTS NOT SHOWN ON THIS STANDARD DRAWING.

B. USE THE AASHTO ROADSIDE DESIGN GUIDE AND STD DWG DD 17 FOR CLEAR ZONE REQUIREMENTS.

C. PLACE CROSSOVER A MINIMUM OF 1500 FT FROM RAMPS.

D. SPACE CROSSOVERS A MINIMUM OF 2 1/2 MILES APART.

E. USE CROSSOVERS WHERE MEDIAN WIDTH IS 36 FT OR GREATER. REGION TRAFFIC ENGINEER APPROVAL REQUIRED FOR MEDIAN WIDTHS LESS THAN 36 FT.

F. USE 1/2 MEDIAN WIDTH AS CROSSOVER RADIUS, EXCEPT FOR MEDIANS WIDER THAN 130 FT, THEN USE 65 FT RADIUS MAXIMUM WITH CONNECTING TANGENT SECTION.

G. USE 10:1 OR FLATTER SLOPE FOR APPROACHES TO CROSSOVER.

H. PROVIDE MINIMUM SIGHT DISTANCE FOR CROSSOVER LOCATIONS.

I. PLACE 'NO U-TURN-EXCEPT AUTHORIZED VEHICLES' (RS 5-11A) SIGNING AND DELINEATION AT EACH CROSSOVER ACCORDING TO STD DWG SN 5.

J. CONSTRUCT THE MEDIAN CROSSOVER TO APPEAR INCONSPICUOUS BY FLATTENING OF SLOPES AND USING ROAD BASE OR SIMILAR MATERIAL FOR SURFACING.

K. PROVIDE MAINTENANCE CROSSOVERS AT LOCATIONS WHERE SNOW AND ICE REMOVAL WOULD BE SIGNIFICANTLY FACILITATED. LOCATIONS TO BE DETERMINED BY THE REGION TRAFFIC ENGINEER.

L. PROVIDE EMERGENCY VEHICLE CROSSOVERS OF THE TYPES SHOWN ON PLANS. LOCATIONS TO BE DETERMINED BY THE REGION TRAFFIC ENGINEER.

M. INSTALL DOUBLE CROSSOVERS AT MAINTENANCE STATION AREA BOUNDARIES. LOCATIONS TO BE DETERMINED BY THE REGION TRAFFIC ENGINEER.

DESIGN ONLY DRAWING

REVISIONS

NO.	DATE	APPR.	REMARKS

UTAH DEPARTMENT OF TRANSPORTATION
STANDARD DRAWINGS FOR ROAD AND BRIDGE CONSTRUCTION
SALT LAKE CITY, UTAH

RECOMMENDED FOR APPROVAL — JAN.01.2017 DATE

CHAIRMAN STANDARDS COMMITTEE APPROVED — JAN.01.2017 DATE

DEPUTY DIRECTOR

FREEWAY CROSSOVER

STANDARD DRAWING TITLE

STD. DWG. NO.

DD 7

28-NOV-2016 DGN File:L:\Standard Drawings\Imperial\2017 Approved\1-All Drawings\DD07.dgn

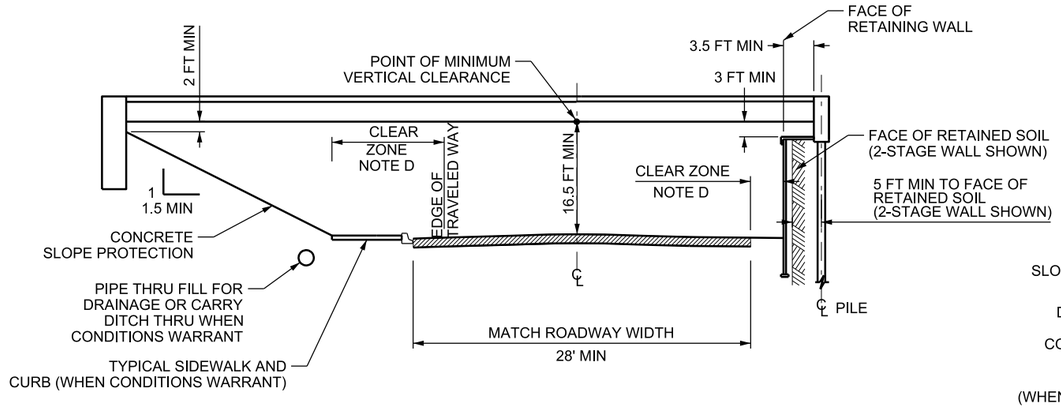

PREFERRED UNDERPASS CLEARANCES

(OTHER THAN FREEWAY OR MAJOR HIGHWAY)

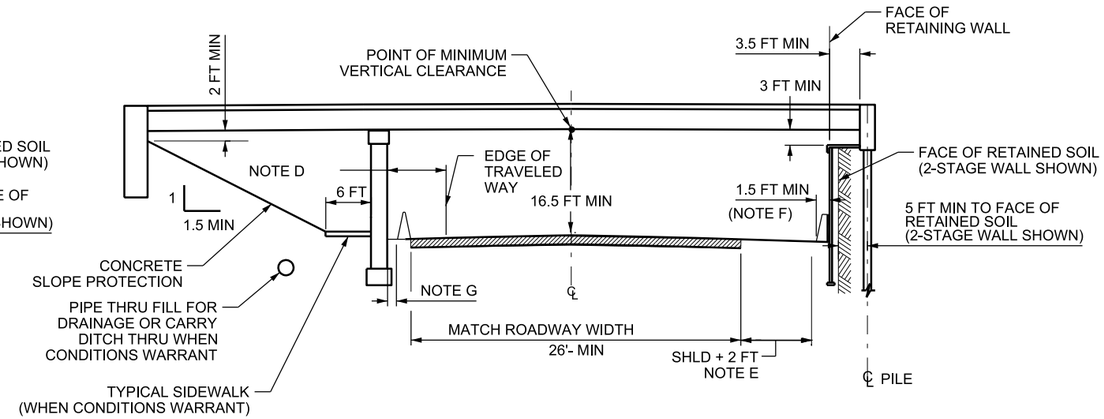

MINIMUM UNDERPASS CLEARANCES

(OTHER THAN FREEWAY OR MAJOR HIGHWAY)

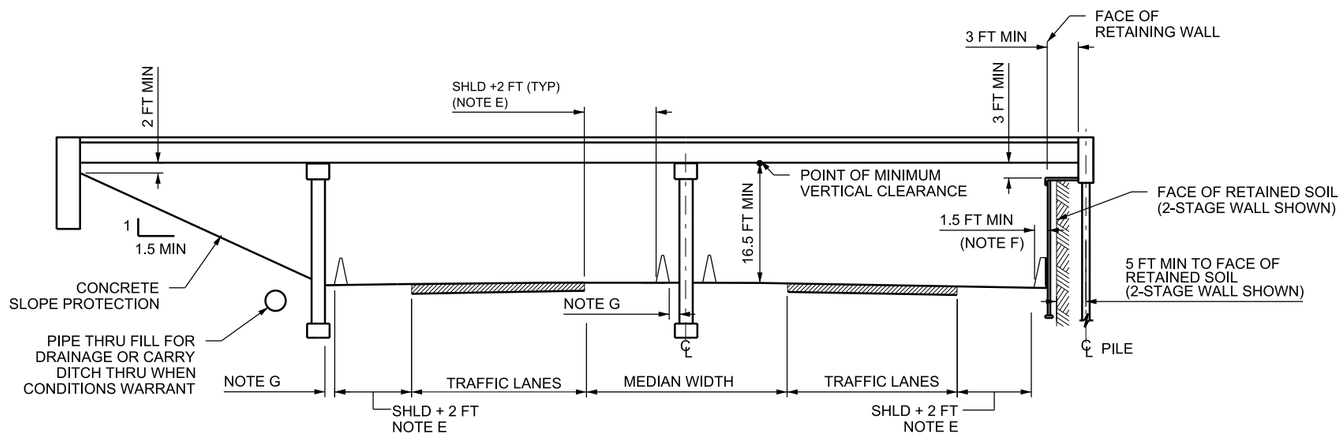

MINIMUM UNDERPASS CLEARANCES

(FREEWAY OR MAJOR HIGHWAY)

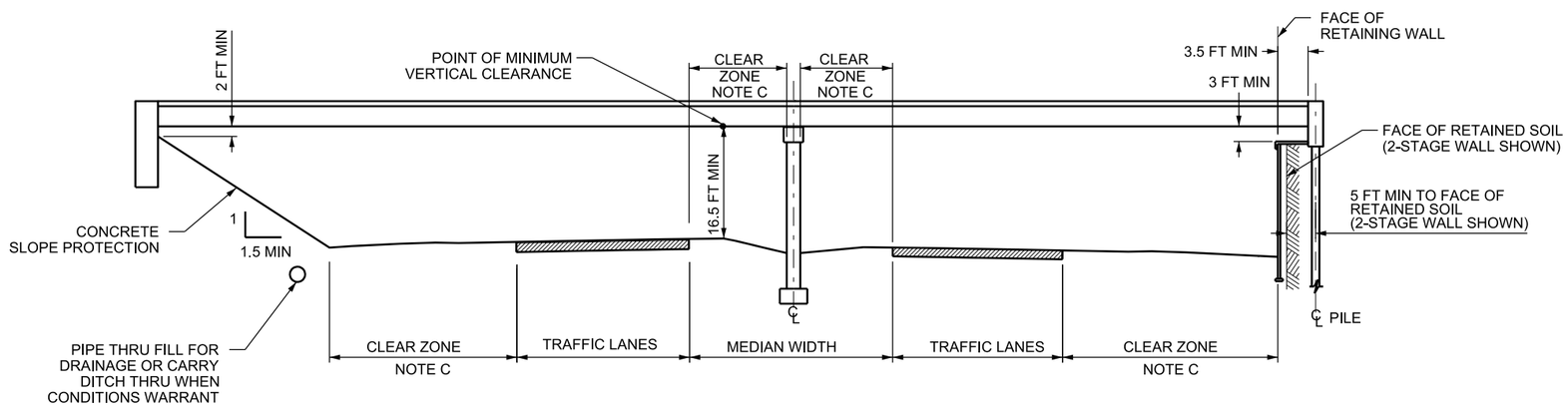

PREFERRED UNDERPASS CLEARANCES

(FREEWAY OR MAJOR HIGHWAY)

DESIGN NOTES:

A. PROVIDE ADEQUATE PROTECTION FOR OBSTRUCTIONS WITHIN THE CLEAR ZONE.

B. PROVIDE A MINIMUM OF 17 FT 6 INCHES VERTICAL CLEARANCE FOR PEDESTRIAN OVERPASSES AND OVERHEAD SIGN STRUCTURES.

C. USE THE AASHTO ROADSIDE DESIGN GUIDE AND STD DWG DD 17 FOR CLEAR ZONE REQUIREMENTS.

D. FOR:
40 MPH AND UNDER
USE 6 FT MINIMUM FROM EDGE OF PAVEMENT
45 MPH AND ABOVE
USE CLEAR ZONE OR BARRIER

E. THE 2 FT MIN BARRIER OFFSET IS NOT REQUIRED WHEN ROADWAY DESIGN REQUIRES A 12 FT OR WIDER EFFECTIVE SHOULDER.

F. SEE STD DWG BA 2E AND STD DWG BA 3L FOR BARRIER OPTIONS.

G. SEE STD DWG BA 1E FOR BARRIER REQUIREMENTS AND COLUMN DESIGN REQUIREMENTS.

H. RAILROADS: REFER TO APPLICABLE RAILROAD.

DESIGN-ONLY DRAWING

NO.	DATE	APPR.	REMARKS

REVISIONS

UTAH DEPARTMENT OF TRANSPORTATION
STANDARD DRAWINGS FOR ROAD AND BRIDGE CONSTRUCTION
SALT LAKE CITY, UTAH

RECOMMENDED FOR APPROVAL — JAN.01, 2017 DATE
CHAIRMAN STANDARDS COMMITTEE APPROVED — JAN.01, 2017 DATE
DEPUTY DIRECTOR

STANDARD DRAWING TITLE
STRUCTURAL GEOMETRIC DESIGN STANDARDS FOR CLEARANCES

STD. DWG. NO.
DD 8

DGN File:L:\Standard Drawings\Imperial\2017 Approved\1-All Drawings\DD08.dgn
28-NOV-2016

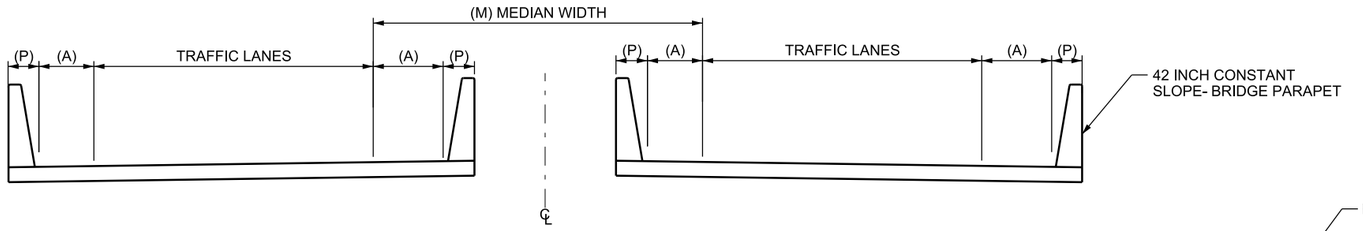

STRUCTURE CROSS SECTION

(OPEN MEDIAN)

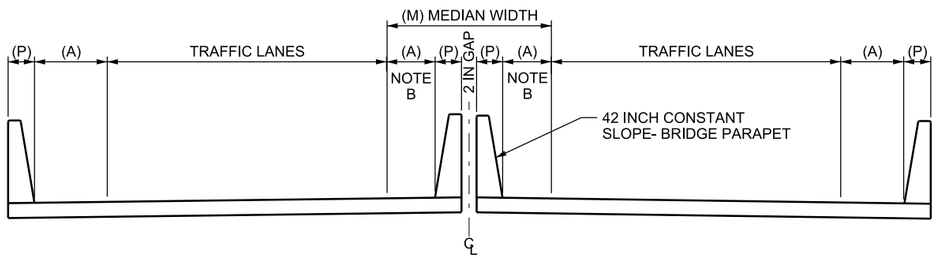

STRUCTURE CROSS SECTION

(CLOSED MEDIAN)

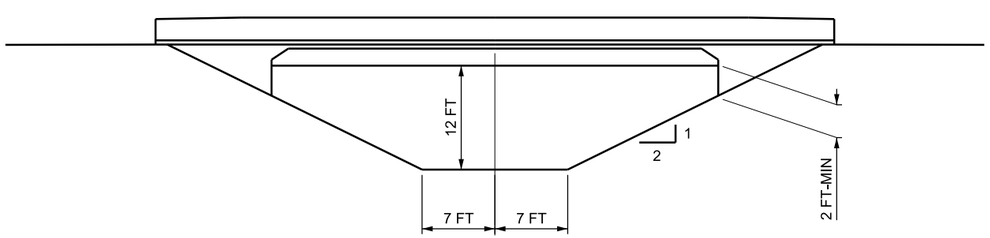

WILDLIFE CROSSING

(NON VEHICULAR)

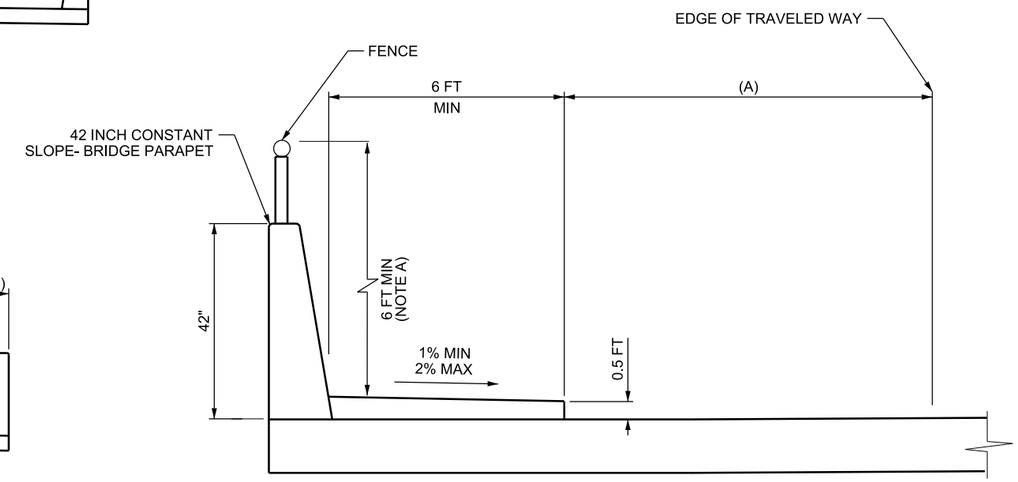

SIDEWALK GEOMETRIC

(DESIGN SPEED LESS THAN 45 MPH)

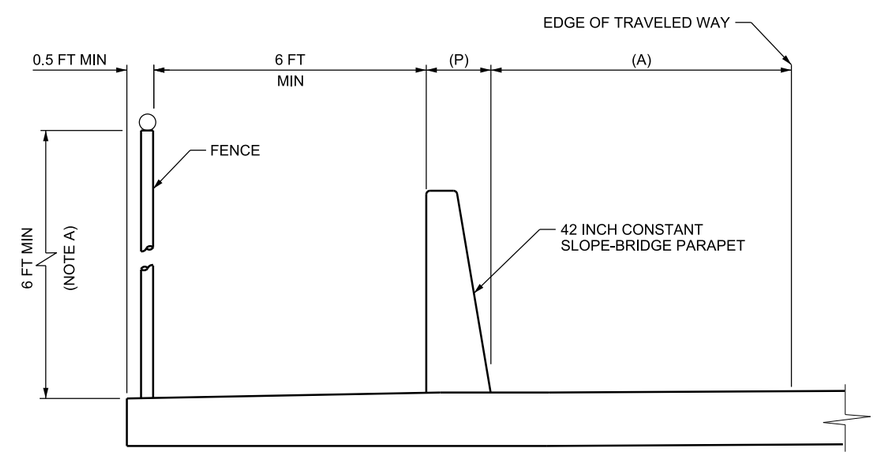

SIDEWALK GEOMETRIC

(DESIGN SPEED 45 MPH OR GREATER)

LEGEND

(A) NORMAL SHOULDER PLUS 2 FT FOR BARRIER OFFSET ON ALL ROADS AND RAMPS, BUT NOT GREATER THAN 12 FT.

(M) A CLOSED MEDIAN STRUCTURE IS PREFERRED WHEN MEDIAN WIDTH IS LESS THAN 30 FT.

(P) PARAPET DIMENSION CONTROLLED BY SPECIFIC DESIGN. TYPICAL 17 INCH SINGLE SLOPE PARAPET.

DESIGN NOTES:

A. USE RAILROAD CRITERIA FOR BRIDGES OVER A RAILROAD.

B. DESIGN EXCEPTION REQUIRED FOR REDUCTION IN SHOULDER.

DESIGN-ONLY DRAWING

REVISIONS

NO.	DATE	APPR.	REMARKS

UTAH DEPARTMENT OF TRANSPORTATION
STANDARD DRAWINGS FOR ROAD AND BRIDGE CONSTRUCTION
SALT LAKE CITY, UTAH

RECOMMENDED FOR APPROVAL — JAN.01.2017 DATE
CHAIRMAN STANDARDS COMMITTEE APPROVED — JAN.01.2017 DATE
DEPUTY DIRECTOR

STANDARD DRAWING TITLE
STRUCTURAL GEOMETRIC DESIGN STANDARDS

STD. DWG. NO.
DD 9

28-NOV-2016 DGN File:L:\Standard Drawings\Imperial\2017 Approved\1-All Drawings\DD09.dgn

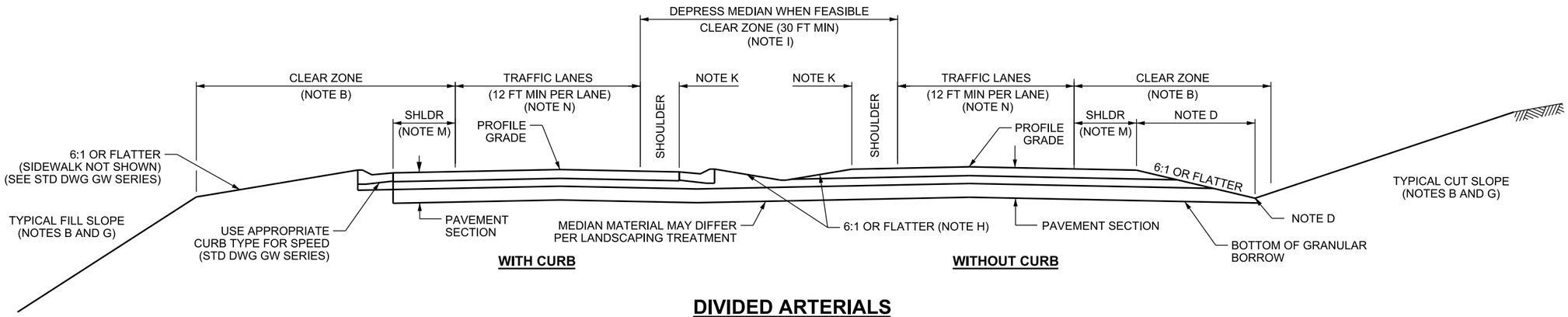

DIVIDED ARTERIALS

(NOTE I)

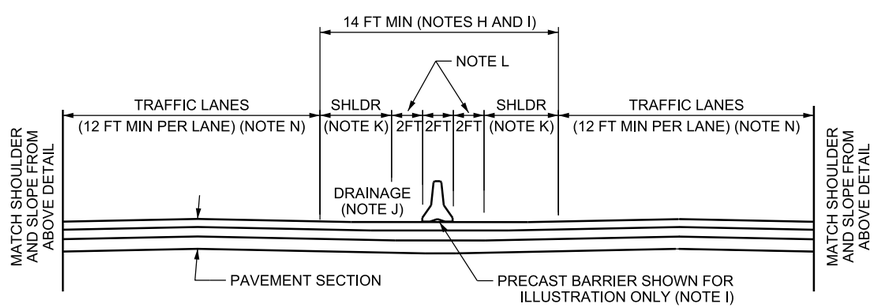

PAVED MEDIAN DETAIL

(OPTION FOR MEDIANS WIDTHS < 30 FT)
(NOTE I)

DESIGN NOTES:

A. USE THE AASHTO A POLICY ON GEOMETRIC DESIGN OF HIGHWAYS AND STREETS FOR DESIGN OF ROADWAY ELEMENTS NOT SHOWN ON THIS STANDARD DRAWING.

B. USE THE AASHTO ROADSIDE DESIGN GUIDE AND STD DWG DD 17 FOR CLEAR ZONE REQUIREMENTS. CLEAR ZONE MAY EXTEND INTO CUT OR FILL SLOPES.

C. STANDARDS SHOWN ARE MINIMUM VALUES. EXCEED STANDARDS IF CONDITIONS PERMIT.

D. PROVIDE MEASURES TO CAPTURE AND CONVEY DRAINAGE AWAY FROM PAVEMENT SECTION. MAINTAIN A MINIMUM OF 1 FT VERTICAL DISTANCE BELOW THE BOTTOM OF THE GRANULAR BORROW LAYER TO THE BOTTOM OF THE CUT DITCH OR FILL SLOPE. NOTIFY MATERIALS OF ANY IMPACTS TO PAVEMENT SECTION SATURATION.

E. TRANSITION FROM FLAT TO STEEPER CUT AND FILL SLOPES IN SUFFICIENT DISTANCE TO PROVIDE A NATURAL PLEASING APPEARANCE.

F. SEE STD DWG DD 4 FOR TYPICAL DETAILS FOR SUPERELEVATED AND TANGENT SECTIONS. SEE STD DWG DD 2 FOR TYPICAL SECTION ON DITCH FLARING AND BENCHED SLOPE.

G. DO NOT EXCEED 2H:1V OR STEEPER SLOPES WITHOUT APPROVAL OF CENTRAL GEOTECHNICAL DIVISION.

H. DESIGN MEDIAN TO CAPTURE ROADWAY DRAINAGE. PAVE THE MEDIAN AREA WITH A 10:1 OR FLATTER SLOPE WHERE MEDIAN IS NOT OF SUFFICIENT WIDTH TO PROVIDE A DEPTH OF 1 FT BELOW THE PAVEMENT THICKNESS OR PAVEMENT DESIGN IS NOT ADJUSTED FOR SATURATED CONDITIONS.

I. REFER TO THE AASHTO ROADSIDE DESIGN GUIDE, "GUIDELINES FOR MEDIAN BARRIERS ON HIGH-SPEED, FULLY CONTROLLED-ACCESS ROADWAYS" FOR APPLICATION CRITERIA OF POSITIVE SEPARATION.

J. PROVIDE UNDERGROUND DRAINAGE AT PAVED MEDIAN IF ROADWAYS HAVE A BREAK IN SLOPE THAT DIVERTS WATER TO THE MEDIAN.

K. USE MINIMUM 4 FT MEDIAN SHOULDERS FOR UP TO TWO TRAFFIC LANES IN EACH DIRECTION. USE MINIMUM 10 FT MEDIAN SHOULDERS FOR THREE OR MORE TRAFFIC LANES.

L. THE 2 FT MINIMUM OFFSET IS NOT REQUIRED WHEN ROADWAY DESIGN REQUIRES 12 FT OR WIDER EFFECTIVE SHOULDER.

M. SEE STD DWG DD 6, TABLE 1 FOR OUTSIDE SHOULDER WIDTHS.

N. THE 12 FT MINIMUM LANE WIDTH MAY BE REDUCED (11 FT MIN) UPON APPROVAL OF THE REGION TRAFFIC ENGINEER.

O. USE A 0.5 PERCENT MIN PROFILE GRADE FOR ALL ROADWAY SECTIONS. PROFILE GRADE MAY BE REDUCED TO NO LESS THAN 0.3 PERCENT UPON APPROVAL FROM CENTRAL HYDRAULICS DIVISION.

DESIGN ONLY DRAWING

REVISIONS

NO.	DATE	APPR.	REMARKS

UTAH DEPARTMENT OF TRANSPORTATION
STANDARD DRAWINGS FOR ROAD AND BRIDGE CONSTRUCTION
SALT LAKE CITY, UTAH

RECOMMENDED FOR APPROVAL — JAN.01, 2017 DATE
CHAIRMAN STANDARDS COMMITTEE APPROVED — JAN.01, 2017 DATE
DEPUTY DIRECTOR

DIVIDED ARTERIALS
STANDARD DRAWING TITLE

STD. DWG. NO.
DD 10

28-NOV-2016 DGN File: L:\Standard Drawings\Imperial\2017 Approved\1-All Drawings\DD10.dgn

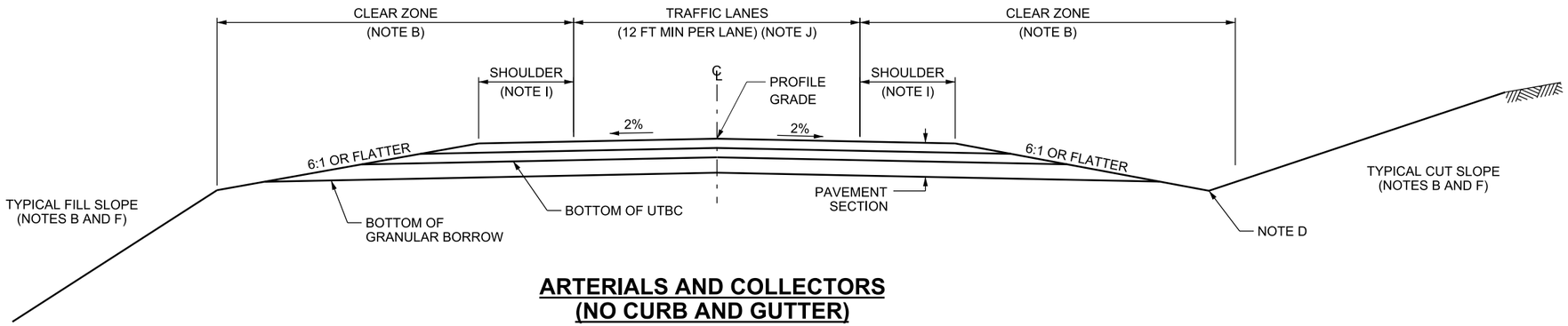

ARTERIALS AND COLLECTORS
(NO CURB AND GUTTER)

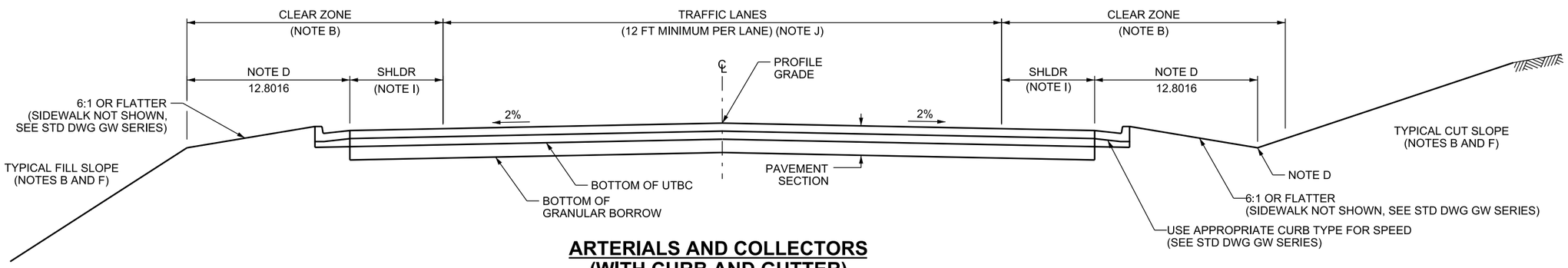

ARTERIALS AND COLLECTORS
(WITH CURB AND GUTTER)

DESIGN NOTES:

A. USE THE AASHTO A POLICY ON GEOMETRIC DESIGN OF HIGHWAYS AND STREETS FOR DESIGN OF ROADWAY ELEMENTS NOT SHOWN ON THIS STANDARD DRAWING.

B. USE THE AASHTO ROADSIDE DESIGN GUIDE AND STD DWG DD 17 FOR CLEAR ZONE REQUIREMENTS. CLEAR ZONE MAY EXTEND INTO CUT OR FILL SLOPES.

C. STANDARDS SHOWN ARE RECOMMENDED VALUES. EXCEED STANDARDS IF CONDITIONS PERMIT.

D. PROVIDE MEASURES TO CAPTURE AND CONVEY DRAINAGE AWAY FROM PAVEMENT SECTION. MAINTAIN A MINIMUM OF ONE FT VERTICAL DISTANCE BELOW THE BOTTOM OF THE GRANULAR BORROW LAYER TO THE BOTTOM OF THE CUT DITCH OR FILL SLOPE. NOTIFY MATERIALS OF ANY IMPACTS TO PAVEMENT SECTION SATURATION.

E. TRANSITION FROM FLAT TO STEEPER CUT AND FILL SLOPES IN A SUFFICIENT DISTANCE TO PROVIDE A NATURALLY PLEASING APPEARANCE.

F. DO NOT EXCEED 2H:1V OR STEEPER SLOPES WITHOUT APPROVAL OF CENTRAL GEOTECHNICAL DIVISION.

G. SEE STD DWG DD 3 FOR TYPICAL DETAILS FOR SUPERELEVATED AND TANGENT SECTIONS. SEE STD DWG DD 2 FOR TYPICAL SECTION ON DITCH FLARING AND BENCHED SLOPE.

H. USE A 0.5 PERCENT MIN PROFILE GRADE FOR ALL ROADWAY SECTIONS. PROFILE GRADE MAY BE REDUCED TO NO LESS THAN 0.3 PERCENT UPON APPROVAL FROM CENTRAL HYDRAULICS DIVISION.

I. SEE STD DWG DD 6, TABLE 1 FOR OUTSIDE SHOULDER WIDTHS.

J. THE 12 FT MINIMUM LANE WIDTH MAY BE REDUCED (11 FT MIN) UPON APPROVAL OF THE REGION TRAFFIC ENGINEER.

DESIGN ONLY DRAWING

REVISIONS

NO.	DATE	APPR.	REMARKS

UTAH DEPARTMENT OF TRANSPORTATION
STANDARD DRAWINGS FOR ROAD AND BRIDGE CONSTRUCTION
SALT LAKE CITY, UTAH

RECOMMENDED FOR APPROVAL — JAN.01.2017 DATE
CHAIRMAN STANDARDS COMMITTEE APPROVED — JAN.01.2017 DATE
DEPUTY DIRECTOR

ARTERIAL AND COLLECTOR ROADS
STANDARD DRAWING TITLE

STD. DWG. NO.
DD 11

28-NOV-2016 DGN File:L:\Standard Drawings\Imperial\2017 Approved\1-All Drawings\DD11.dgn

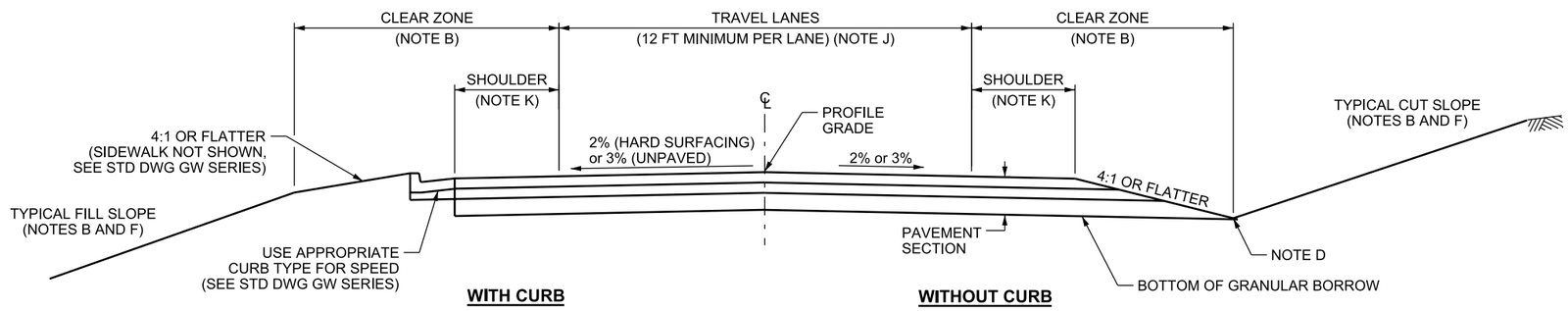

FRONTAGE AND ACCESS ROADS

DESIGN NOTES:

A. USE THE AASHTO A POLICY ON GEOMETRIC DESIGN OF HIGHWAYS AND STREETS FOR DESIGN OF ROADWAY ELEMENTS NOT SHOWN ON THIS STANDARD DRAWING.

B. USE THE AASHTO ROADSIDE DESIGN GUIDE AND STD DWG DD 17 FOR CLEAR ZONE REQUIREMENTS. CLEAR ZONE MAY EXTEND INTO CUT OR FILL SLOPES.

C. STANDARDS SHOWN ARE RECOMMENDED VALUES. EXCEED STANDARDS IF CONDITIONS PERMIT.

D. PROVIDE MEASURES TO CAPTURE AND CONVEY DRAINAGE AWAY FROM PAVEMENT SECTION. MAINTAIN A MINIMUM OF ONE FOOT VERTICAL DISTANCE BELOW THE BOTTOM OF THE GRANULAR BORROW LAYER TO THE BOTTOM OF THE CUT DITCH OR FILL SLOPE. NOTIFY MATERIALS OF ANY IMPACTS TO PAVEMENT SECTION SATURATION.

E. TRANSITION FROM FLAT TO STEEPER CUT AND FILL SLOPES IN A SUFFICIENT DISTANCE TO PROVIDE A NATURALLY PLEASING APPEARANCE.

F. DO NOT EXCEED 2H:1V OR STEEPER CUT SLOPES WITHOUT APPROVAL OF CENTRAL GEOTECHNICAL DIVISION.

G. SEE STD DWG DD 3 FOR TYPICAL DETAILS FOR SUPERELEVATED AND TANGENT SECTIONS. SEE STD DWG DD 2 FOR TYPICAL SECTION ON DITCH FLARING AND BENCHED SLOPE.

H. USE A 0.5 PERCENT MIN PROFILE GRADE FOR ALL ROADWAY SECTIONS. PROFILE GRADE MAY BE REDUCED TO NO LESS THAN 0.3 PERCENT UPON APPROVAL FROM CENTRAL HYDRAULICS DIVISION.

I. REFER TO THE MUNICIPALITY OWNER FOR LOCAL ROAD DESIGN. NOTIFY THE MUNICIPALITY OF ANY VARIATIONS FROM THEIR STANDARD TO MEET UDOT STANDARDS.

J. THE 12 FT MINIMUM LANE WIDTH MAY BE REDUCED (10 FT MIN) UPON APPROVAL OF THE REGION TRAFFIC ENGINEER.

K. SEE STD DWG DD 6, TABLE 1 FOR OUTSIDE SHOULDER WIDTHS.

DESIGN ONLY DRAWING

REVISIONS

NO.	DATE	APPR.	REMARKS

UTAH DEPARTMENT OF TRANSPORTATION
STANDARD DRAWINGS FOR ROAD AND BRIDGE CONSTRUCTION
SALT LAKE CITY, UTAH

RECOMMENDED FOR APPROVAL — JAN. 01, 2017 DATE
CHAIRMAN STANDARDS COMMITTEE APPROVED — JAN. 01, 2017 DATE
DEPUTY DIRECTOR

LOCAL, FRONTAGE, AND ACCESS ROADS
STANDARD DRAWING TITLE

STD. DWG. NO.
DD 12

28-NOV-2016 DGN File:L:\Standard Drawings\Imperial\2017 Approved\1-All Drawings\DD12.dgn

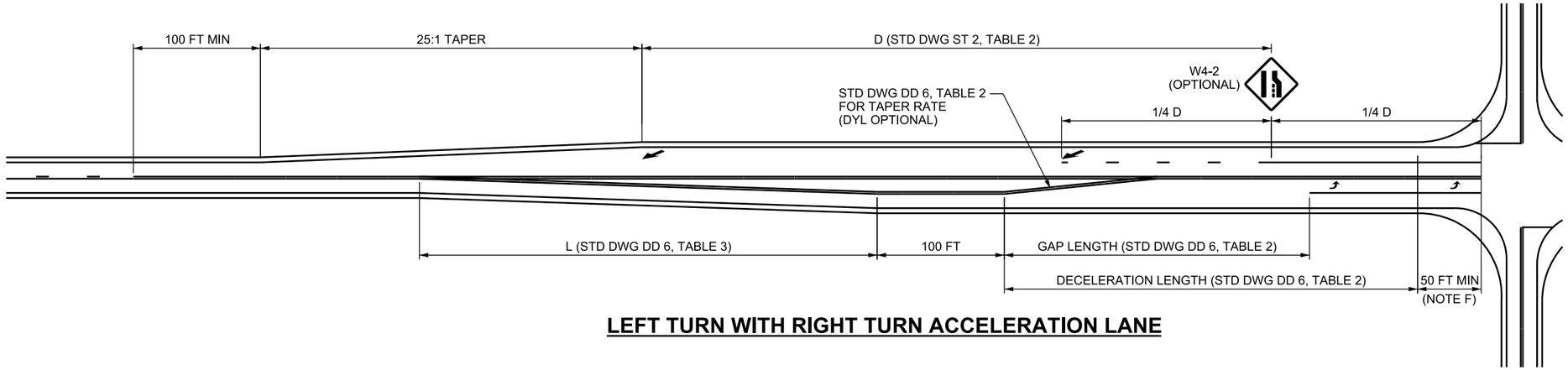

LEFT TURN WITH RIGHT TURN ACCELERATION LANE

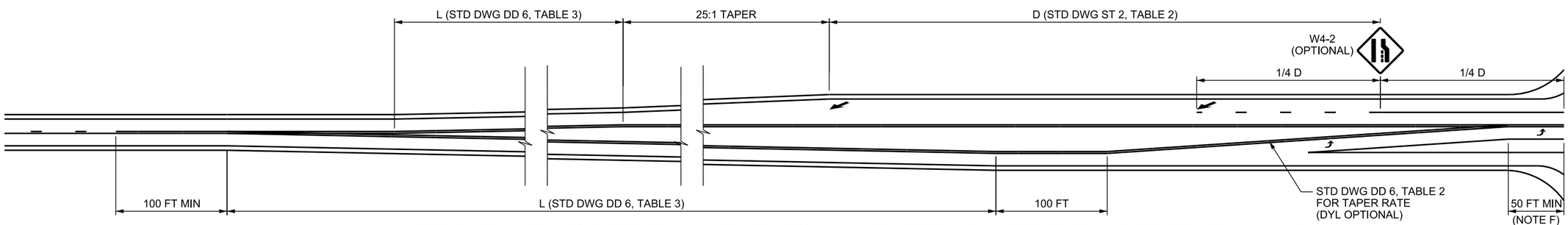

LEFT TURN WITH RIGHT TURN ACCELERATION LANE (OPPOSES LEFT TURN ACCELERATION LANE)

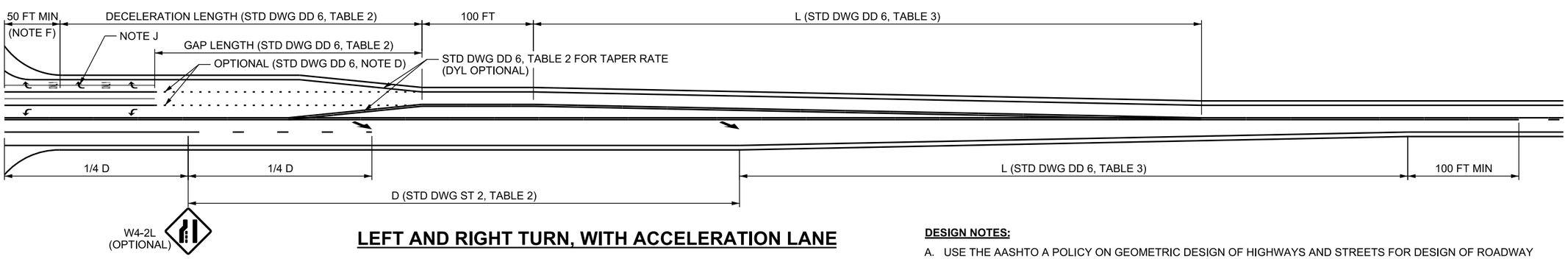

LEFT AND RIGHT TURN, WITH ACCELERATION LANE

TABLE 1				
MINIMUM LEVELS FOR INSTALLATION OF TURN AND ACCELERATION LANES ON TWO LANE ROADS				
SPEED	LEFT TURN LANE	RIGHT TURN LANE	LEFT TURN ACCELERATION LANE	RIGHT TURN ACCELERATION LANE
40 MPH AND LESS	25 VPH	50 VPH	*	*
45 TO 55 MPH	10 VPH	25 VPH	*	50 VPH
60 MPH AND GREATER	5 VPH	10 VPH	**	25 VPH

* OPTIONAL FOR 50 MPH AND LESS. FOR 55 MPH, AS REQUIRED BY THE REGION TRAFFIC ENGINEER.
** AS REQUIRED BY THE REGION TRAFFIC ENGINEER.
VPH= VEHICLES PER HOUR IN ANY ONE HOUR PERIOD IN PASSENGER CAR EQUIVALENTS.

DESIGN NOTES:

A. USE THE AASHTO A POLICY ON GEOMETRIC DESIGN OF HIGHWAYS AND STREETS FOR DESIGN OF ROADWAY ELEMENTS NOT SHOWN ON THIS STD DWG.

B. USE THE AASHTO ROADSIDE DESIGN GUIDE AND STD DWG DD 17 FOR CLEAR ZONE REQUIREMENTS NOT SHOWN.

C. STANDARDS SHOWN ARE RECOMMENDED VALUES. EXCEED STANDARDS WHEREVER POSSIBLE.

D. CONFIGURATIONS SHOWN MAY VARY BASED ON LOCATION OF WIDENING SUCH AS EQUAL WIDENING TO BOTH SIDES AS OPPOSED TO ONE SIDE OF THE EXISTING ROAD OR ANOTHER.

E. MATCH THE EXISTING OUTSIDE SHOULDER WIDTH (4 FT MIN) FOR ACCELERATION AND DECELERATION LANES (INCLUDING TAPERS). USE TABLE 1 ON STD DWG DD 6 FOR ALL OTHER SHOULDER WIDTHS.

F. INCREASE VEHICLE STORAGE LENGTH AS DETERMINED BY ENGINEERING STUDY OR REGION TRAFFIC ENGINEER.

G. SEE ST SERIES STD DWGS FOR INFORMATION ON STRIPING DETAILS.

H. PROVIDE A TWO-WAY LEFT TURN LANE CONNECTING ADJACENT ACCESS POINTS WHEN THEIR TAPERS OVERLAP, OR AS DIRECTED BY THE REGION TRAFFIC ENGINEER.

I. DESIGN ALL EDGES OF PAVEMENT AND STOP LINE / RAISED MEDIAN OFFSETS FOR DESIGN VEHICLE (WB-67, UNLESS APPROVED BY REGION TRAFFIC ENGINEER). DESIGN STRIPING FOR STANDARD (P) DESIGN VEHICLES.

J. PLACE RIGHT TURN ARROWS AND "ONLY" MARKINGS WHEN AN OPPOSING RIGHT TURN ACCELERATION OR A MANDATORY LANE DROP IS USED.

DESIGN ONLY DRAWING

REVISIONS

NO.	DATE	APPR.	REMARKS

UTAH DEPARTMENT OF TRANSPORTATION
STANDARD DRAWINGS FOR ROAD AND BRIDGE CONSTRUCTION
SALT LAKE CITY, UTAH

RECOMMENDED FOR APPROVAL — JAN.01.2017 DATE
CHAIRMAN STANDARDS COMMITTEE APPROVED — JAN.01.2017 DATE
DEPUTY DIRECTOR

STANDARD DRAWING TITLE: TWO-LANE INTERSECTION 1 OF 2

STD. DWG. NO. DD 13

DGN File: L:\Standard Drawings\Imperial\2017 Approved\1-All Drawings\DD13.dgn
28-NOV-2016

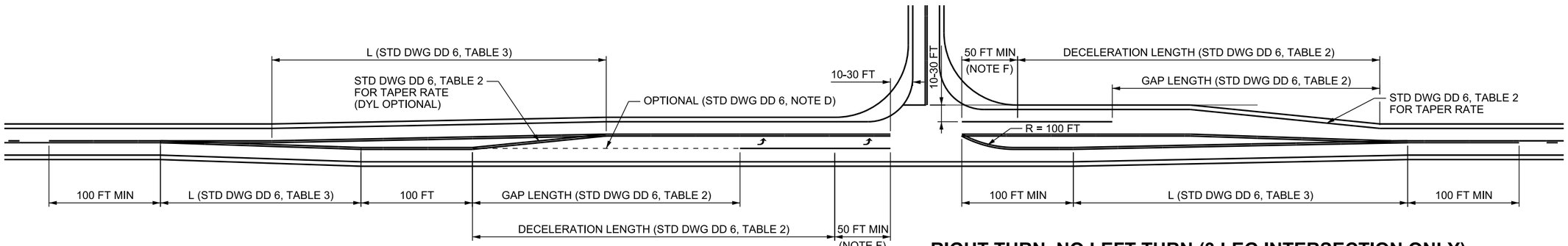

LEFT TURN

RIGHT TURN, NO LEFT TURN (3 LEG INTERSECTION ONLY)

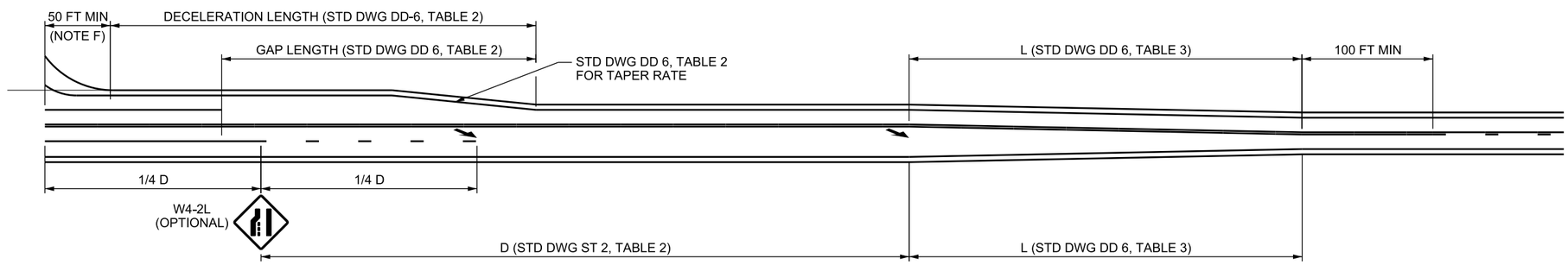

RIGHT TURN, NO LEFT TURN, WITH ACCELERATION LANE

TABLE 1				
MINIMUM LEVELS FOR INSTALLATION OF TURN AND ACCELERATION LANES ON TWO LANE ROADS				
SPEED	LEFT TURN LANE	RIGHT TURN LANE	LEFT TURN ACCELERATION LANE	RIGHT TURN ACCELERATION LANE
40 MPH AND LESS	25 VPH	50 VPH	*	*
45 TO 55 MPH	10 VPH	25 VPH	*	50 VPH
60 MPH AND GREATER	5 VPH	10 VPH	**	25 VPH

* OPTIONAL FOR 50 MPH AND LESS. FOR 55 MPH, AS REQUIRED BY THE REGION TRAFFIC ENGINEER.
** AS REQUIRED BY THE REGION TRAFFIC ENGINEER.
VPH= VEHICLES PER HOUR IN ANY ONE HOUR PERIOD IN PASSENGER CAR EQUIVALENTS.

DESIGN NOTES:

A. USE THE AASHTO A POLICY ON GEOMETRIC DESIGN OF HIGHWAYS AND STREETS FOR DESIGN OF ROADWAY ELEMENTS NOT SHOWN ON THIS STD DWG.

B. USE THE AASHTO ROADSIDE DESIGN GUIDE AND STD DWG DD 17 FOR CLEAR ZONE REQUIREMENTS NOT SHOWN.

C. STANDARDS SHOWN ARE RECOMMENDED VALUES. EXCEED STANDARDS WHEREVER POSSIBLE.

D. CONFIGURATIONS SHOWN MAY VARY BASED ON LOCATION OF WIDENING SUCH AS EQUAL WIDENING TO BOTH SIDES AS OPPOSED TO ONE SIDE OF THE EXISTING ROAD OR ANOTHER.

E. MATCH THE EXISTING OUTSIDE SHOULDER WIDTH (4 FT MIN) FOR ACCELERATION AND DECELERATION LANES (INCLUDING TAPERS). USE TABLE 1 ON STD DWG DD 6 FOR ALL OTHER SHOULDER WIDTHS.

F. INCREASE VEHICLE STORAGE LENGTH AS DETERMINED BY ENGINEERING STUDY OR REGION TRAFFIC ENGINEER.

G. SEE ST SERIES STD DWGS FOR STRIPING DETAILS.

H. PROVIDE A TWO-WAY LEFT TURN LANE CONNECTING ADJACENT ACCESS POINTS WHEN THEIR TAPERS OVERLAP, OR AS DIRECTED BY THE REGION TRAFFIC ENGINEER.

I. DESIGN ALL EDGES OF PAVEMENT AND STOP LINE / RAISED MEDIAN OFFSETS FOR DESIGN VEHICLE (WB-67, UNLESS APPROVED BY REGION TRAFFIC ENGINEER). DESIGN STRIPING FOR STANDARD (P) DESIGN VEHICLES.

DESIGN ONLY DRAWING

REVISIONS

NO.	DATE	APPR.	REMARKS

UTAH DEPARTMENT OF TRANSPORTATION
STANDARD DRAWINGS FOR ROAD AND BRIDGE CONSTRUCTION
SALT LAKE CITY, UTAH

RECOMMENDED FOR APPROVAL — JAN.01.2017 DATE
CHAIRMAN STANDARDS COMMITTEE APPROVED — JAN.01.2017 DATE
DEPUTY DIRECTOR

TWO-LANE INTERSECTION 2 OF 2
STANDARD DRAWING TITLE

STD. DWG. NO.
DD 14

DGN File: L:\Standard_Drawings\Imperial\2017 Approved\1-All Drawings\DD14.dgn
28-NOV-2016

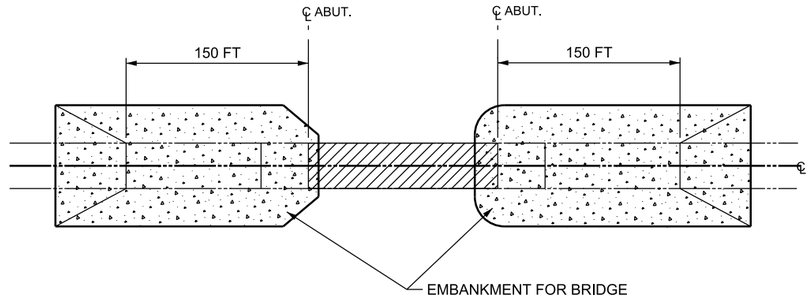

* THEORETICAL SLOPE MAXIMUM OF 1:1 TO TRANSITION BETWEEN EMBANKMENT MATERIALS.

PLAN VIEW APPROACH EMBANKMENTS

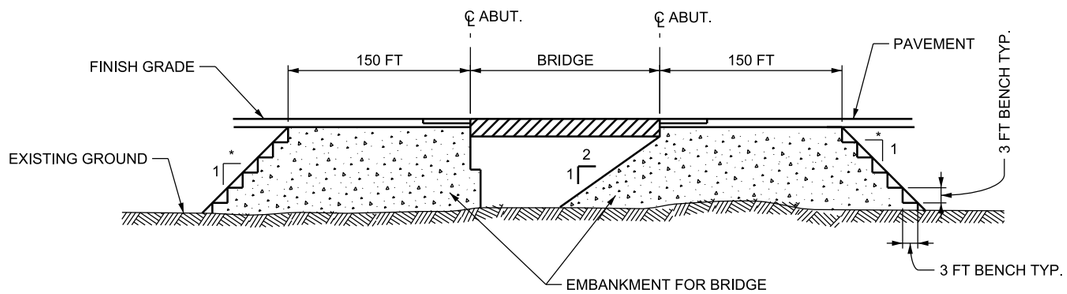

CL PROFILE VIEW APPROACH EMBANKMENTS

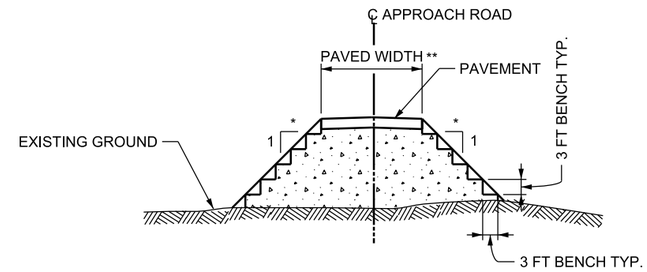

CL CROSS SECTION VIEW APPROACH EMBANKMENTS

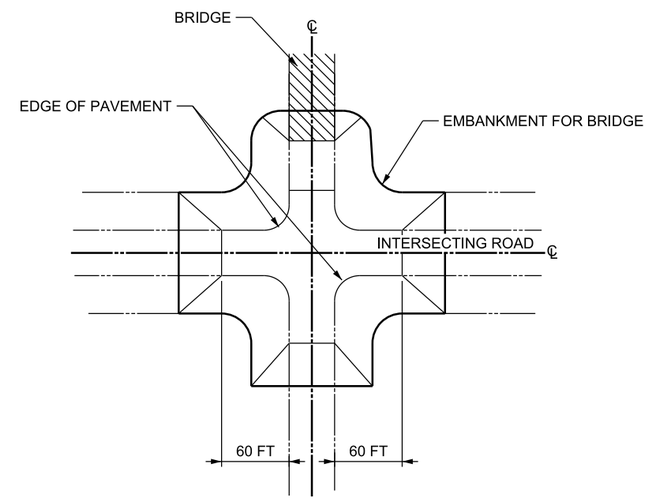

PLAN VIEW INTERSECTING ROADWAY EMBANKMENTS

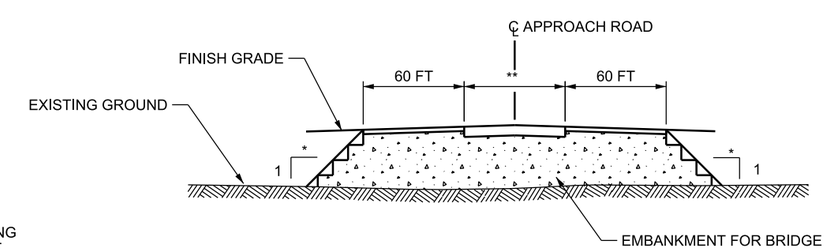

CL PROFILE VIEW INTERSECTING ROADWAY EMBANKMENTS

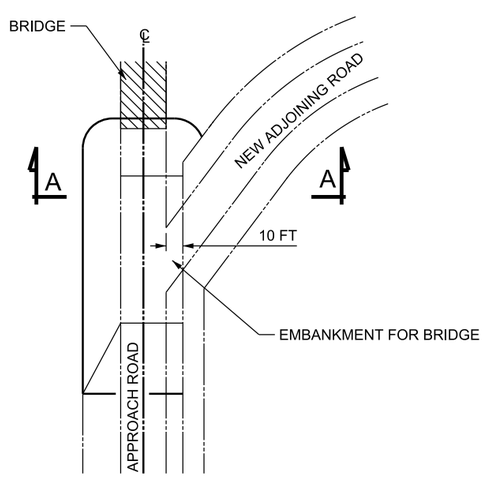

PLAN VIEW ADJOINING EMBANKMENTS

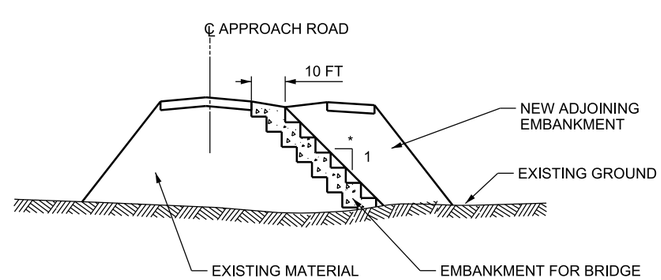

SECTION A-A VIEW

* THEORETICAL SLOPE MAXIMUM OF 1:1 TO TRANSITION BETWEEN EMBANKMENT MATERIALS.

** INDICATES EDGE OF PAVEMENT TO EDGE OF PAVEMENT DIMENSION.

DESIGN-ONLY DRAWING

NO.	DATE	APPR.	REMARKS

REVISIONS

UTAH DEPARTMENT OF TRANSPORTATION
STANDARD DRAWINGS FOR ROAD AND BRIDGE CONSTRUCTION
SALT LAKE CITY, UTAH

RECOMMENDED FOR APPROVAL — JAN.01, 2017 DATE
CHAIRMAN STANDARDS COMMITTEE APPROVED — JAN.01, 2017 DATE
DEPUTY DIRECTOR

STANDARD DRAWING TITLE
EMBANKMENT FOR BRIDGE PLACEMENT

STD. DWG. NO.
DD 15

DGN File: L:\Standard Drawings\Imperial\2017 Approved\1-All Drawings\DD15.dgn
28-NOV-2016

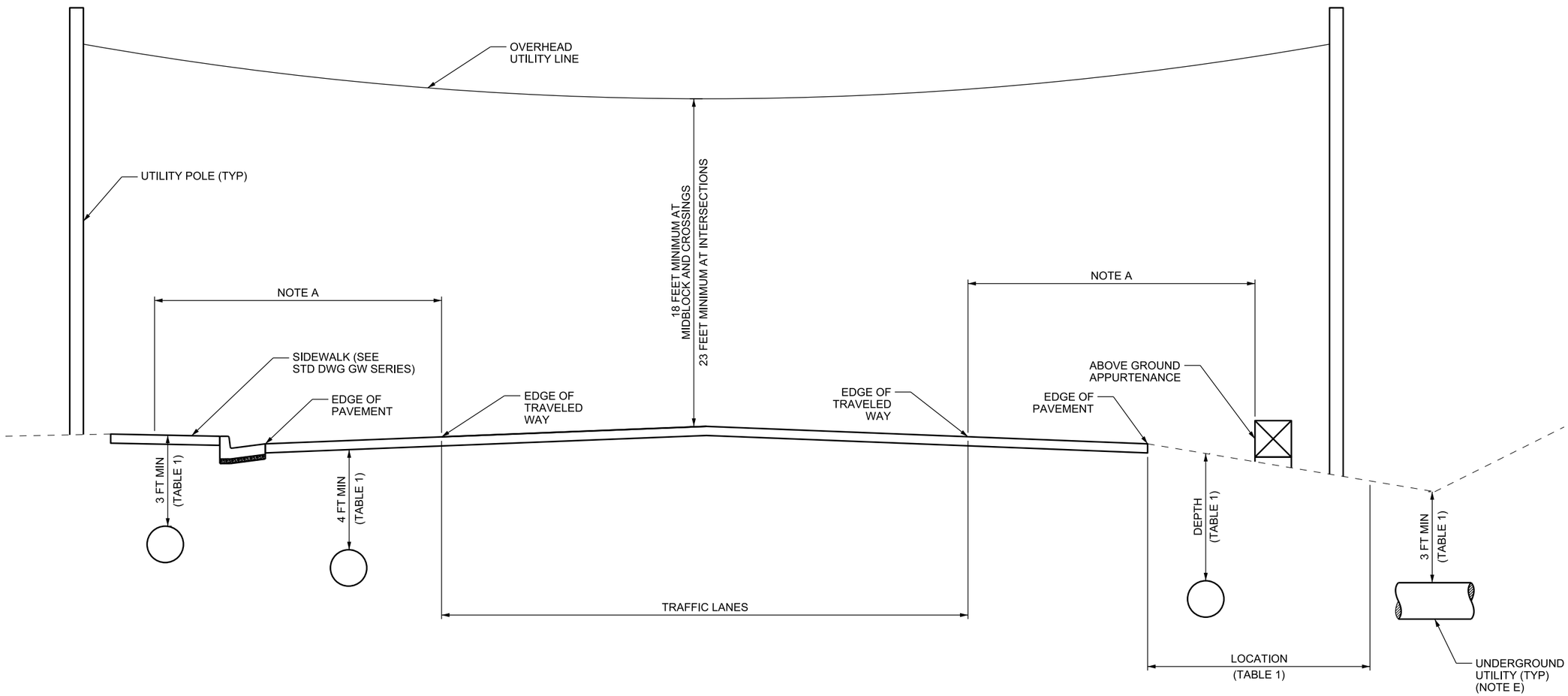

TABLE 1					
MINIMUM DEPTH OF BURY TO TOP OF UTILITY (LONGITUDINAL AND CROSSING INSTALLATIONS)					
LOCATION	UNDER PAVEMENT	UNDER SIDEWALK	UNDER DITCH (NOTE 5)	LOCATION < 20 FT FROM EDGE OF PAVEMENT	LOCATION > 20 FT FROM EDGE OF PAVEMENT
DEPTH	4 FT BELOW TOP OF PAVEMENT	3 FT BELOW TOP OF SIDEWALK	3 FT BELOW FLOW LINE	5 FT BELOW NATURAL GRADE	3 FT BELOW NATURAL GRADE

DESIGN NOTES:

A. USE THE AASHTO ROADSIDE DESIGN GUIDE AND STD DWG DD17 FOR CLEAR ZONE REQUIREMENTS NOT SHOWN ON THIS STD DWG.

B. FOLLOW ADMINISTRATIVE RULE 930-7, UTILITY ACCOMMODATION. DESIGN REQUIREMENTS ARE FOUND IN R930-7-7 GENERAL DESIGN REQUIREMENTS AND R930-7-8 DEFINITIVE DESIGN REQUIREMENTS.

C. MEET OR EXCEED NATIONAL ELECTRIC SAFETY CODE VERTICAL AND HORIZONTAL CLEARANCES AND OSHA WORKING CLEARANCES FOR MAINTANENCE OF DEPARTMENT FACILITIES.

D. INSTALL UTILITY CROSSINGS AS CLOSE TO PERPENDICULAR TO THE ROADWAY AS POSSIBLE.

E. AVOID LONGITUDINAL PLACEMENT OF UNDERGROUND UTILITIES DIRECTLY BENEATH DITCHES.

F. 18 FT MINIMUM CLEARANCE REQUIRED FOR ALL OVERHEAD UTILITIES WITHIN UDOT RIGHT-OF-WAY, BOTH CROSSING AND PARALLEL TO THE ROADWAY.

REVISIONS

NO.	DATE	APPR.	REMARKS

UTAH DEPARTMENT OF TRANSPORTATION
STANDARD DRAWINGS FOR ROAD AND BRIDGE CONSTRUCTION
SALT LAKE CITY, UTAH

RECOMMENDED FOR APPROVAL — JAN.01.2017 DATE
CHAIRMAN STANDARDS COMMITTEE APPROVED — JAN.01.2017 DATE
DEPUTY DIRECTOR

UTILITY LOCATION REQUIREMENTS

STANDARD DRAWING TITLE

STD. DWG. NO.
DD 16

28-NOV-2016 DGN File:L:\Standard Drawings\Imperial\2017 Approved\1-All Drawings\DD16.dgn

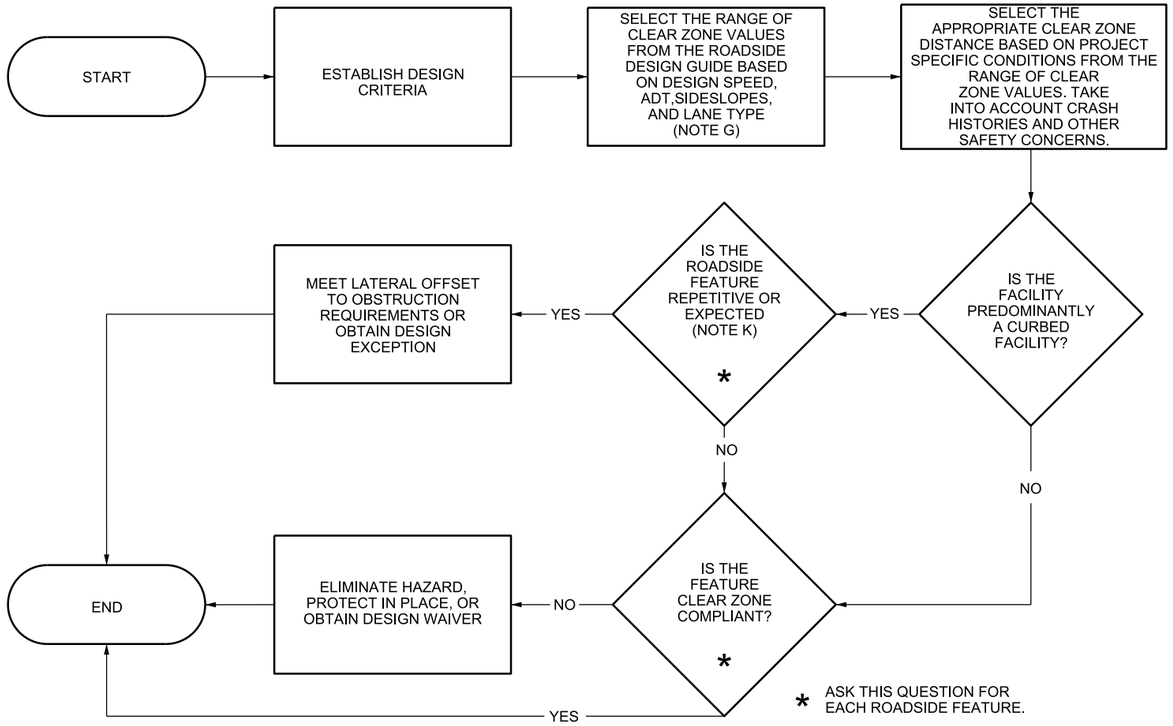

PROCESS FOR DETERMINING CLEAR ZONES

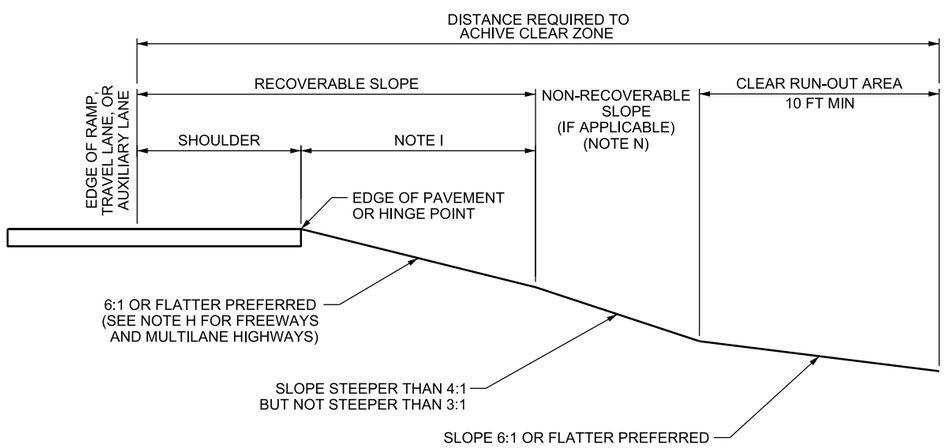

ROADSIDE WITH NON-RECOVERABLE FORESLOPES (NON-CURBED SECTION)

CLEAR ZONE IS THE TOTAL ROADSIDE BORDER AREA STARTING AT THE EDGE OF THE TRAVELED WAY AVAILABLE FOR SAFE USE BY ERRANT VEHICLES. THIS AREA MAY CONSIST OF A SHOULDER, A RECOVERABLE SLOPE. A NON-RECOVERABLE SLOPE, AND A CLEAR RUN-OUT AREA. IT IS PREFERRED TO MAKE THE CLEAR ZONE AS WIDE AS PRACTICAL. THE DESIGN CLEAR ZONE IS DEPENDENT UPON TRAFFIC VOLUMES, SPEEDS, AND THE ROADSIDE GEOMETRY.

ROADSIDE TERRAIN INCLUDES ALL SURFACES ALONG THE ROADWAY OTHER THAN TRAVEL LANES, AUXILIARY LANES, AND RAMPS. FOR THE PURPOSE OF ESTABLISHING CLEAR ZONES AND LATERAL OFFSET TO OBSTRUCTION REQUIREMENTS, ROADSIDE TERRAIN IS DEFINED AS RECOVERABLE, NON-RECOVERABLE, NON-TRAVERSABLE, AND HAZARDOUS AS FOLLOWS:

RECOVERABLE - SLOPE IS SAFELY TRAVERSABLE AND IS 4:1 OR FLATTER.

NON-RECOVERABLE - SLOPE IS SAFELY TRAVERSABLE AND STEEPER THAN 4:1 BUT NOT STEEPER THAN 3:1.

NON-TRAVERSABLE - SLOPE IS NOT SAFELY TRAVERSABLE OR IS STEEPER THAN 3:1.

HAZARDOUS - SLOPE IS STEEPER THAN 3:1 AND VERTICAL DIFFERENCE IS GREATER THAN 6 FT.

CLEAR ZONE COMPLIANT THE ROADSIDE AREA WHERE THE SUM OF ALL RECOVERABLE TERRAIN IS EQUAL TO OR GREATER THAN THE DETERMINED CLEAR ZONE VALUE AND WHERE EVERY FEATURE HAS BEEN ADDRESSED IN ONE OF THE FOLLOWING WAYS:

1. HAS BEEN ELIMINATED (REMOVED, RELOCATED OUTSIDE OF THE CLEAR ZONE, OR IS TRAVERSABLE OR CRASHWORTHY)

OR

2. HAS BEEN PROTECTED IN PLACE

OR

3. IS LEFT UNSHIELDED WITH DESIGN WAIVER (IF BARRIER OR CRASH CUSHION IS MORE HAZARDOUS THAN THE FEATURE, LIKELIHOOD OF STRIKING THE FEATURE IS VERY SMALL, OR THE TREATMENT EXPENSE OUTWEIGHS THE BENEFITS IN TERMS OF CRASH REDUCTION).

LATERAL OFFSET TO OBSTRUCTION REQUIREMENTS ARE DEFINED AS FOLLOWS:

1. NEW CONSTRUCTION OR RECONSTRUCTION OR WIDENING PROJECTS ON RURAL AND URBAN HIGHWAYS WITHOUT CURBS: THE MINIMUM LATERAL OFFSET TO OBSTRUCTION IS FROM THE EDGE OF THE TRAVEL LANE TO THE EDGE OF THE SHOULDER AS DEFINED BY UDOT'S ACCEPTED DESIGN STANDARDS. NARROWING SHOULDERS TO ACCOMMODATE OBSTRUCTIONS (FOR EXAMPLE, EXISTING BRIDGE PIERS THAT WILL REMAIN IN PLACE, UTILITY POLES, AND BUILDINGS) WILL NECESSITATE A DESIGN EXCEPTION FOR LATERAL OFFSET TO OBSTRUCTION.

2. NEW CONSTRUCTION OR RECONSTRUCTION OR WIDENING PROJECTS ON RURAL AND URBAN HIGHWAYS WITH CURBS: THE MINIMUM LATERAL OFFSET TO OBSTRUCTION IS A DISTANCE OF 1.5 FT BEHIND THE FACE OF THE CURB ON TANGENT SECTIONS AND 3 FT BEHIND THE FACE OF THE CURB ON RADII. THIS DISTANCE REPRESENTS AN OPERATIONAL OFFSET THAT PERMITS CURBSIDE PARKING, BUT DOES NOT ADVERSELY AFFECT TRAFFIC FLOW. IT DOES NOT APPLY TO AN APPROVED TRAFFIC BARRIER WHERE ONE IS DEPLOYED; BARRIERS SHOULD BE INSTALLED AT AN OFFSET CONSISTENT WITH STANDARD PRACTICE.

3. PRESERVATION PROJECTS: THE MINIMUM LATERAL OFFSET TO OBSTRUCTION IS THE EXISTING CONDITION OR THE MINIMUM FOR NEW CONSTRUCTION/RECONSTRUCTION, WHICHEVER IS LESS.

VERTICAL CLEARANCES USED FOR THE PURPOSE OF DETERMINING LATERAL OFFSET TO OBSTRUCTION WILL BE MEASURED AT A HEIGHT OF 9 INCHES ABOVE THE GROUND SURFACE AT THE LOCATION OF THE OBJECT IN QUESTION AND EXTEND TO AN ELEVATION OF 16 FT 6 INCHES ABOVE THE SURFACE OF THE TRAVELED WAY.

DESIGN NOTES:

A. USE THE AASHTO ROADSIDE DESIGN GUIDE FOR CLEAR ZONE REQUIREMENTS.
B. CLEAR ZONE MAY EXTEND INTO CUT OR FILL SLOPES. MAINTAIN A CLEAR ZONE COMPLIANT SLOPE FROM THE EDGE OF THE PAVEMENT TO THE DISTANCE REQUIRED TO ACHIEVE CLEAR ZONE IN BOTH CUT AND FILL CONDITIONS. THERE MAY BE CUT FORESLOPES AND BACKSLOPES IN THE CLEAR ZONE.
C. FORESLOPE BREAKS MAY BE ROUNDED TO PREVENT ENCROACHING VEHICLES FROM BECOMING AIRBORNE.
D. TREAT AUXILIARY LANES SUCH AS PASSING LANES OR ACCELERATION AND DECELERATION LANES THAT LEAD TO RAMP GORES AS TRAVEL LANES FOR THE PURPOSES OF CLEAR ZONE AND SHOULDER.
E. ACCELERATION OR DECELERATION LANES WITHIN THE AASHTO DEFINED DISTANCES, OTHER THAN THOSE LEADING TO AND FROM RAMPS, MAY BE INCLUDED IN THE CLEAR ZONE.
F. NO MORE THAN ONE ACCELERATION OR DECELERATION LANE MAY BE INCLUDED IN THE CLEAR ZONE.
G. USE THE RAMP OPERATING SPEEDS FOR CLEAR ZONE CALCULATION FOR RAMPS.
H. USE A CONSTANT 6:1 OR FLATTER SLOPE TO CLEAR ZONE FOR FREEWAYS AND MULTILANE HIGHWAYS.
I. MAINTAIN A MINIMUM 10 FT DISTANCE FROM EDGE OF PAVEMENT OR HINGE POINT TO NON-RECOVERABLE SLOPE.
J. EVALUATE AREAS OUTSIDE OF RIGHT-OF-WAY WHEN CLEAR ZONE EXTENDS BEYOND RIGHT-OF-WAY LIMITS.
K. EVALUATE EACH FEATURE IN THE CLEAR ZONE FOR CONTEXT WITHIN THE PROJECT. EXAMPLES OF FEATURES WITHIN THE CLEAR ZONE THAT MAY BE CONSIDERED REPETITIVE OR EXPECTED IN AN URBAN ENVIRONMENT INCLUDE, FOR EXAMPLE: UTILITY POLES, TRAFFIC SIGNALS, TREES, AND BUSINESS SIGNS.
L. DO NOT CONSIDER CANALS THAT PARALLEL THE ROADWAY REPETITIVE OR EXPECTED.
M. THE CLEAR ZONE IS THE EXISTING CONDITION FOR PRESERVATION PROJECTS.
N. DO NOT INCLUDE SLOPE DISTANCE IN CALCULATED CLEAR ZONE DISTANCE.

DESIGN-ONLY DRAWING

REVISIONS

NO.	DATE	APPR.	REMARKS

UTAH DEPARTMENT OF TRANSPORTATION
STANDARD DRAWINGS FOR ROAD AND BRIDGE CONSTRUCTION
SALT LAKE CITY, UTAH

RECOMMENDED FOR APPROVAL — JAN 01, 2017 DATE
CHAIRMAN STANDARDS COMMITTEE APPROVED — JAN 01, 2017 DATE
DEPUTY DIRECTOR

CLEAR ZONE AND LATERAL OFFSET TO OBSTRUCTION
STANDARD DRAWING TITLE

STD. DWG. NO.
DD 17

28-NOV-2016 DGN File:L:\Standard.Drawings\Imperial\2017 Approved\1-All Drawings\DD17.dgn

TABLE 1																
RECOMMENDATIONS FOR INSTALLING MARKED CROSSWALKS AND ENHANCEMENTS																
ROADWAY TYPE (NUMBER OF LANES AND MEDIAN TYPE)	ADT < 9,000				ADT 9,000 TO 12,000				ADT 12,000 TO 15,000				ADT > 15,000			
	30 MPH	35 MPH	40 MPH	45 MPH	30 MPH	35 MPH	40 MPH	45 MPH	30 MPH	35 MPH	40 MPH	45 MPH	30 MPH	35 MPH	40 MPH	45 MPH
TWO LANES	C	C	P	P	C	C	P	P	C	C	N	N	C	P	N	N
THREE LANES	C	C	P	P	C	P	P	P	P	P	N	N	P	N	N	N
FOUR OR MORE LANES WITH RAISED MEDIAN	C	C	P	P	C	P	N	N	P	P	N	N	N	N	N	N
FOUR OR MORE LANES WITHOUT RAISED MEDIAN	C	P	N	N	P	P	N	N	N	N	N	N	N	N	N	N

C = CANDIDATE SITE FOR MARKED CROSSWALKS
P = POTENTIAL FOR ADDING PEDESTRIAN ENHANCEMENTS
N = NEEDS PEDESTRIAN ENHANCEMENTS
USE DESIGN SPEED

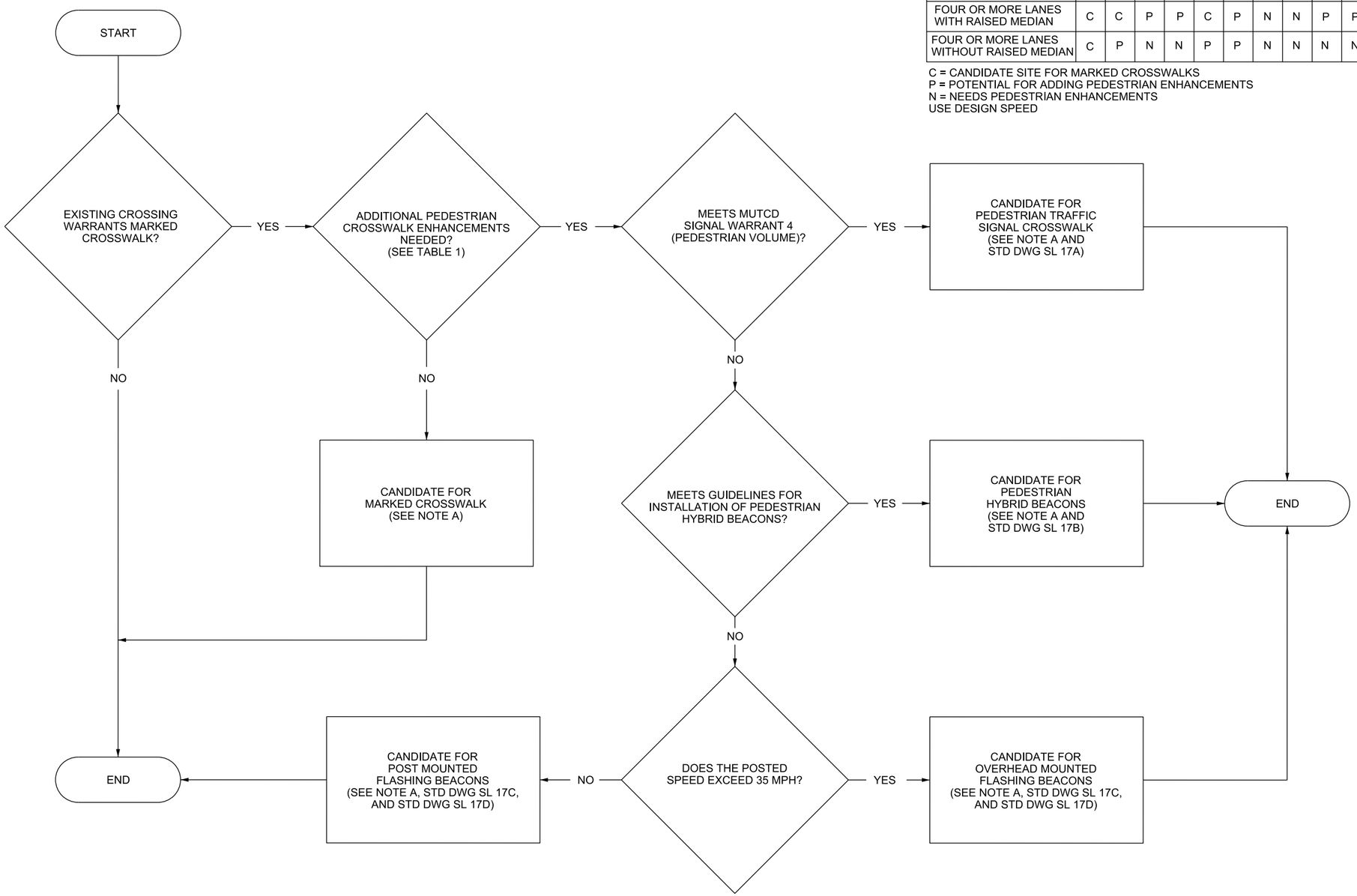

PROCESS FOR WARRANTING PEDESTRIAN ENHANCEMENTS

DESIGN NOTES:

A. SCHEDULE WARRANTING FIELD REVIEW WITH REGION TRAFFIC OPERATIONS ENGINEER AND TRAFFIC & SAFETY ENGINEER.

DESIGN ONLY DRAWING

REVISIONS

NO.	DATE	APPR.	REMARKS

UTAH DEPARTMENT OF TRANSPORTATION
STANDARD DRAWINGS FOR ROAD AND BRIDGE CONSTRUCTION
SALT LAKE CITY, UTAH

RECOMMENDED FOR APPROVAL — JAN. 01, 2017 DATE
CHAIRMAN STANDARDS COMMITTEE APPROVED — JAN. 01, 2017 DATE
DEPUTY DIRECTOR

MARKED PEDESTRIAN CROSSWALK ENHANCEMENT FLOWCHART
STANDARD DRAWING TITLE

STD. DWG. NO.
DD 18

DGN File:L:\Standard Drawings\Imperial\2017 Approved\1-All Drawings\DD18.dgn
28-NOV-2016

ROUND CORRUGATED STEEL PIPE
3" x 1" CORRUGATIONS

THICKNESS INCH	0.064	0.079	0.109	0.138	0.168
PIPE DIAMETER INCH	MAXIMUM FILL HEIGHT FT				
36	81	102	143	184	225
42	70	87	122	157	193
48	61	76	107	138	159
54	54	68	95	122	150
60	49	61	85	110	135
66	44	55	78	100	122
72	40	51	71	92	112
78	37	47	66	85	104
84	35	43	61	78	96
90	32	40	57	73	90
96		38	53	69	84
102		36	50	65	79
108			47	61	75
114			45	58	71
120			42	55	67
126				52	64
132				50	61
138				48	58
144					56

ROUND CORRUGATED STEEL PIPE
5" x 1" CORRUGATIONS

THICKNESS INCH	0.064	0.079	0.109	0.138	0.168
PIPE DIAMETER INCH	MAXIMUM FILL HEIGHT FT				
36	72	90	127	163	200
42	62	77	109	140	171
48	54	68	95	122	150
54	48	60	84	109	133
60	43	54	76	98	120
66	39	49	69	89	109
72	36	45	63	81	100
78	33	41	58	75	92
84	31	38	54	70	85
90	29	36	50	65	80
96		34	47	61	75
102		32	44	57	70
108			42	54	66
114			40	51	63
120			38	49	60
126				46	57
132				44	54
138				42	52
144					50

ROUND CORRUGATED STEEL PIPE
2 2/3" x 1/2" CORRUGATIONS

THICKNESS INCH	0.064	0.079	0.109	0.138	0.168
PIPE DIAMETER INCH	MAXIMUM FILL HEIGHT FT				
12	213	266	372	479	586
15	170	212	298	383	469
18	142	177	248	319	391
21	121	152	213	274	335
24	106	133	186	239	293
27	94	118	165	213	260
30	85	106	149	191	234
36	71	88	124	159	195
42	60	76	106	137	167
48	53	66	93	119	146
54		59	82	106	130
60			74	95	117
66				87	106
72				79	97
78					86
84					75

ROUND CORRUGATED STEEL PIPE
3/4" x 3/4" X 7 1/2" SPIRAL RIB PIPE

THICKNESS INCH	0.064	0.079	0.109
PIPE DIAMETER INCH	MAXIMUM FILL HEIGHT FT		
24	56	70	99
30	45	56	79
36	37	47	66
42	32	40	56
48	28	35	49
54	25	31	44
60	22	28	39
66		25	36
72		23	33
78			30
84			28

CORRUGATED STEEL PIPE ARCHES
2 2/3" x 1/2" CORRUGATIONS

PIPE DIM SPAN X RISE INCH	CORNER RADIUS INCH	MINIMUM THICKNESS INCH	MAXIMUM FILL HEIGHT FT
17 x 13	3	0.064	11
21 x 15	3	0.064	9
24 x 18	3	0.064	7
28 x 20	3	0.064	5
35 x 24	4	0.064	6
42 x 29	4 1/2	0.064	5
49 x 33	5 1/2	0.079	5
57 x 38	6 1/2	0.109	6
64 x 43	7	0.109	5
71 x 47	8	0.138	5
77 x 52	8 1/2	0.168	5
83 x 57	9	0.168	5

CORRUGATED STEEL PIPE ARCHES
3" x 1" OR 5" x 1" CORRUGATIONS

PIPE DIM SPAN X RISE INCH	CORNER RADIUS INCH	MIN THICKNESS INCH	MAXIMUM FILL HEIGHT FT
53 x 41	7	0.109	7
60 x 46	8	0.109	7
66 x 51	9	0.109	9
73 x 55	12	0.109	10
81 x 59	14	0.109	11
87 x 63	14	0.109	10
95 x 67	16	0.109	11
103 x 71	16	0.109	10
112 x 75	18	0.109	10
117 x 79	18	0.109	10
128 x 83	18	0.138	8
137 x 87	18	0.138	7
142 x 91	18	0.168	7

NOTES:

1. TABLES ARE FOR PIPE WITH HELICAL LOCK SEAMS.
2. MEASURE MAXIMUM FILL HEIGHT FROM TOP OF PIPE TO TOP OF PAVEMENT SURFACE AT HIGHEST FILL SECTION.
3. REFER TO STD DWG DG 4 FOR MINIMUM FILL HEIGHT REQUIREMENTS.

REVISIONS

NO.	DATE	APPR.	REMARKS

UTAH DEPARTMENT OF TRANSPORTATION
STANDARD DRAWINGS FOR ROAD AND BRIDGE CONSTRUCTION
SALT LAKE CITY, UTAH

RECOMMENDED FOR APPROVAL — JAN.01.2017 DATE
CHAIRMAN STANDARDS COMMITTEE APPROVED — JAN.01.2017 DATE
DEPUTY DIRECTOR

MAXIMUM FILL HEIGHT FOR STEEL DRAINAGE PIPE
STANDARD DRAWING TITLE

STD. DWG. NO.
DG 1

DGN File: L:\Standard Drawings\Imperial\2017 Approved\1-All Drawings\DG01.dgn
28-NOV-2016

ROUND CORRUGATED ALUMINUM PIPE
3" x 1" CORRUGATIONS

THICKNESS INCH	0.060	0.075	0.105	0.135	0.164
PIPE DIAMETER INCH	MAXIMUM FILL HEIGHT FT				
36	59	74	101	133	163
42	50	63	89	114	140
48	44	55	78	100	122
54	39	49	69	89	109
60	35	44	62	80	98
66	32	40	56	73	89
72	29	37	52	66	81
78		34	43	61	75
84			42	57	70
90			41	53	65
96			38	49	60
102				44	54
108				40	49
114					44
120					40

ROUND CORRUGATED ALUMINUM PIPE
2 2/3" x 1/2" CORRUGATIONS

THICKNESS INCH	0.060	0.075	0.105	0.135	0.164
PIPE DIAMETER INCH	MAXIMUM FILL HEIGHT FT				
12	155	193	271	348	426
15	124	154	216	279	340
18	103	129	180	232	284
21	88	110	154	199	243
24	77	96	135	174	213
27	68	86	120	155	189
30	62	77	108	139	170
36	51	64	90	116	142
42	44	55	77	99	121
48			66	86	106
54			54	70	87
60				57	71
66					57
72					45

ROUND CORRUGATED ALUMINUM PIPE
3/4" x 3/4" x 7 1/2" CORRUGATIONS
SPIRAL RIB PIPE

THICKNESS INCH	0.060	0.075	0.105	0.135
PIPE DIAMETER INCH	MAXIMUM FILL HEIGHT FT			
18	55	76		
21	47	65	105	
24	41	57	92	
30	33	45	73	
36	27	38	61	86
42		32	52	74
48			46	65
54			40	57
60			36	52
66				47
72				43

CORRUGATED ALUMINUM PIPE ARCHES
2 2/3" x 1/2" CORRUGATIONS

PIPE DIM SPAN x RISE INCH	CORNER RADIUS INCH	MINIMUM THICKNESS INCH	MAXIMUM FILL HEIGHT FT
17 x 13	3	0.060	11
21 x 15	3	0.060	9
24 x 18	3	0.060	7
28 x 20	3	0.060	5
35 x 24	4	0.060	6
42 x 29	4 1/2	0.060	5
49 x 33	5 1/2	0.075	5
57 x 38	6 1/2	0.135	6
64 x 43	7	0.135	5
71 x 47	8	0.164	5

CORRUGATED ALUMINUM PIPE ARCHES
3" X 1" CORRUGATIONS

PIPE DIM SPAN x RISE INCH	CORNER RADIUS INCH	MINIMUM THICKNESS INCH	MAXIMUM FILL HEIGHT FT
53 x 41	7	0.105	7
60 x 46	8	0.105	7
66 x 51	9	0.105	9
73 x 55	12	0.105	10
81 x 59	14	0.105	11
87 x 63	14	0.105	10
95 x 67	16	0.105	11
105 x 71	16	0.135	10
112 x 75	18	0.135	10
117 x 79	18	0.164	10

NOTES:

1. TABLES ARE FOR PIPE WITH HELICAL LOCK SEAMS.
2. MEASURE MAXIMUM FILL HEIGHT FROM TOP OF PIPE TO TOP OF PAVEMENT SURFACE AT HIGHEST FILL SECTION.
3. REFER TO STD DWG DG 4 FOR MINIMUM FILL HEIGHT REQUIREMENTS.

REVISIONS

NO.	DATE	APPR.	REMARKS

UTAH DEPARTMENT OF TRANSPORTATION
STANDARD DRAWINGS FOR ROAD AND BRIDGE CONSTRUCTION
SALT LAKE CITY, UTAH

RECOMMENDED FOR APPROVAL — JAN.01.2017 DATE
CHAIRMAN STANDARDS COMMITTEE APPROVED — JAN.01.2017 DATE
DEPUTY DIRECTOR

MAXIMUM FILL HEIGHT FOR ALUMINUM DRAINAGE PIPE
STANDARD DRAWING TITLE

STD. DWG. NO.
DG 2

DGN File: L:\Standard Drawings\Imperial\2017 Approved\1-All Drawings\DG02.dgn
28-NOV-2016

REINFORCED CONCRETE CIRCULAR PIPE

PIPE DIA	PIPE CLASSES			
	II	III	IV	V
INCH	MAXIMUM FILL HEIGHT FT			
18	16	22	34	52
21	16	22	34	52
24	16	22	34	52
27	16	22	34	52
30	15	22	34	52
36	15	22	33	51
42	15	22	33	51
48	15	22	33	51
54	15	21	33	51
60	14	21	32	51
66	14	21	32	50
72	14	20	32	50
78	14	20	31	49
84	13	20	31	49
90	13	20	31	49
96	13	19	31	49
102	13	19	30	48
108	12	19	30	48

REINFORCED CONCRETE ELLIPTICAL PIPE

RISE X SPAN	EQUIV DIA	PIPE CLASSES			
		II	III	IV	V
INCH	INCH	MAXIMUM FILL HEIGHT FT			
14 X 23	18	-	12	20	30
19 X 30	24	-	13	21	30
24 X 38	30	9	14	21	30
29 X 45	36	9	14	21	30
34 X 53	42	10	14	21	30
38 X 60	48	10	14	21	30
43 X 68	54	10	14	21	30
48 X 76	60	10	14	21	30
53 X 83	66	10	14	21	30
58 X 91	72	10	15	21	30

THERMOPLASTIC CIRCULAR PIPE

PIPE DIA	PIPE TYPE			
	DUAL WALL HDPE SMOOTH LINED	DUAL WALL POLYPROPYLENE SMOOTH LINED	STEEL REINFORCED THERMOPLASTIC RIBBED	POLYVINYL CHLORIDE (PVC)
INCH	MAXIMUM FILL HEIGHT FT			
18	19	18	N/A	24
24	17	16	N/A	25
30	14	18	50	23
36	15	16	50	22
42	15	18	50	N/A
48	13	17	30	N/A
54	14	N/A	30	N/A
60	14	17	30	N/A

NOTES:

1. MEASURE MAXIMUM FILL HEIGHT FROM TOP OF PIPE TO TOP OF PAVEMENT SURFACE AT HIGHEST FILL SECTION.
2. REFER TO STD DWG DG 4 FOR MINIMUM FILL HEIGHT REQUIREMENTS.

REVISIONS

NO.	DATE	APPR.	REMARKS

UTAH DEPARTMENT OF TRANSPORTATION

STANDARD DRAWINGS FOR ROAD AND BRIDGE CONSTRUCTION

SALT LAKE CITY, UTAH

RECOMMENDED FOR APPROVAL — JAN.1, 2017 DATE

CHAIRMAN STANDARDS COMMITTEE APPROVED — JAN.1, 2017 DATE

DEPUTY DIRECTOR

MAXIMUM FILL HEIGHT FOR THERMOPLASTIC AND REINFORCED CONCRETE DRAINAGE PIPE

STANDARD DRAWING TITLE

STD. DWG. NO.

DG 3

28-NOV-2016 DGN File:L:\Standard Drawings\Imperial\2017 Approved\1-All Drawings\DG03.dgn

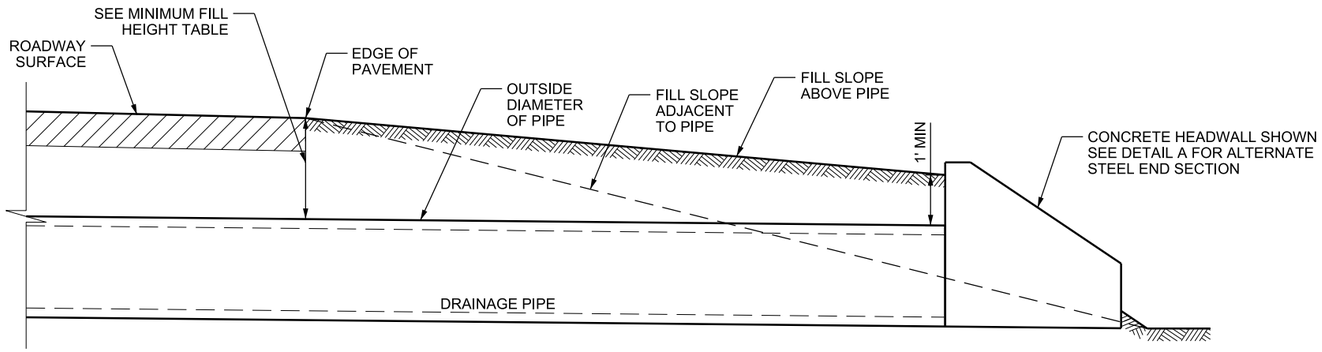

ELEVATION

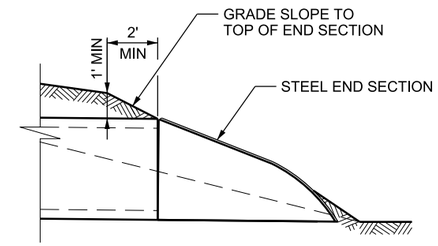

DETAIL A

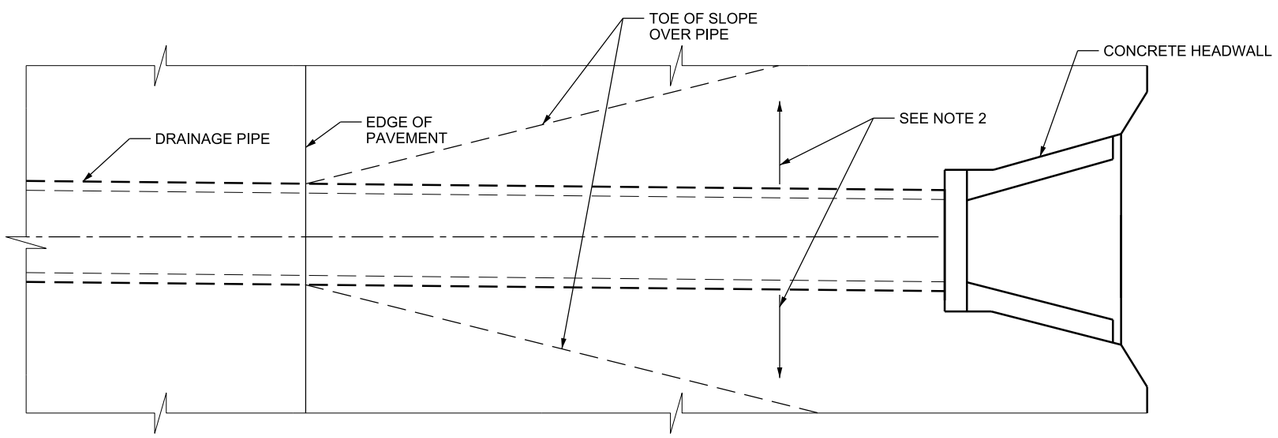

PLAN

MINIMUM FILL HEIGHT

MINIMUM FILL HEIGHT UNDER ROADWAY SURFACE			
SURFACE TYPE	PIPE TYPE		
	CIRCULAR AND ELLIPTICAL REINFORCED CONCRETE	CIRCULAR THERMOPLASTIC *	CIRCULAR AND ARCH CORRUGATED STEEL
FLEXIBLE PAVEMENT OR UNPAVED	1' - 6"	2'	2'
RIGID PAVEMENT	1' - 6"	1' - 6"	1' - 6"

* MINIMUM FILL HEIGHT FOR THERMOPLASTIC PIPE LARGER THAN 48 INCH DIAMETER IS HALF THE PIPE DIAMETER (D/2).

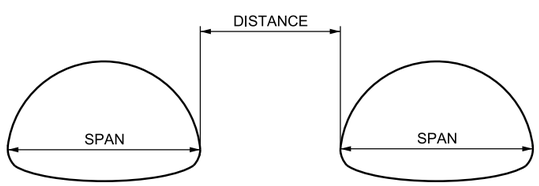

MINIMUM SPACING	
SPAN (INCH)	DISTANCE (INCH)
≤ 80	24
> 80 TO 120	1/3 SPAN

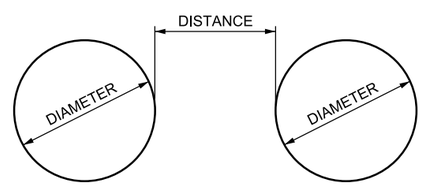

MINIMUM SPACING	
DIAMETER (INCH)	DISTANCE (INCH)
≤ 48	24
> 48 TO 72	½ DIAMETER
> 72 TO 120	36

MINIMUM SPACING FOR MULTIPLE INSTALLATIONS

NOTES:

1. MINIMUM FILL HEIGHT IS ADEQUATE ONLY FOR FINISHED CONSTRUCTION. PROVIDE ADEQUATE COVER TO PROTECT PIPE FROM DAMAGE DURING CONSTRUCTION.
2. GRADE FILL SLOPES OVER THE PIPE TO MEET CLEAR ZONE REQUIREMENTS OR NO STEEPER THAN 4:1 (H:V).

REVISIONS

NO.	DATE	APPR.	REMARKS

UTAH DEPARTMENT OF TRANSPORTATION
STANDARD DRAWINGS FOR ROAD AND BRIDGE CONSTRUCTION
SALT LAKE CITY, UTAH

RECOMMENDED FOR APPROVAL — JAN.1, 2017 DATE
CHAIRMAN STANDARDS COMMITTEE APPROVED — JAN.1, 2017 DATE
DEPUTY DIRECTOR

MINIMUM FILL HEIGHT AND SPACING FOR DRAINAGE PIPE
STANDARD DRAWING TITLE

STD. DWG. NO.
DG 4

DGN File:L:\Standard Drawings\Imperial\2017 Approved\1-All Drawings\DG04.dgn
28-NOV-2016

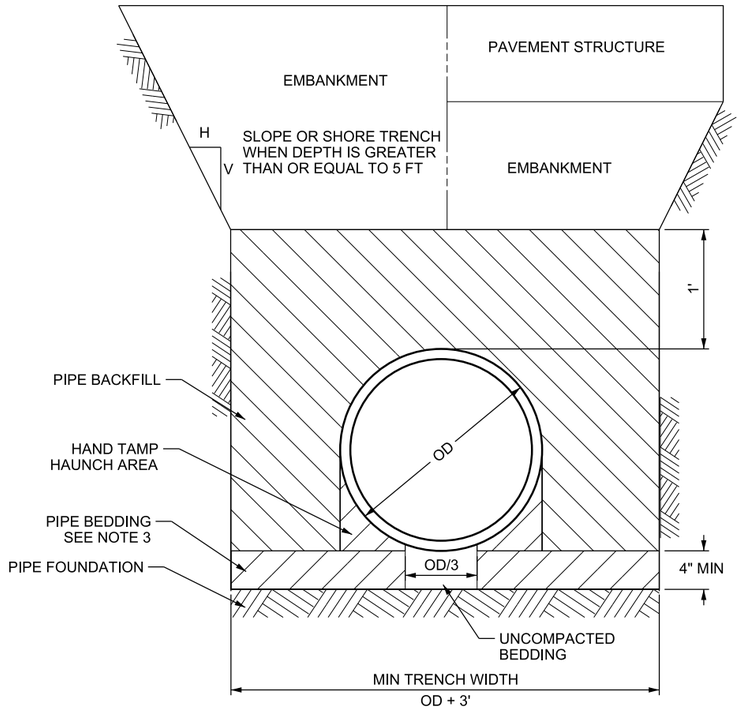

CIRCULAR PIPE

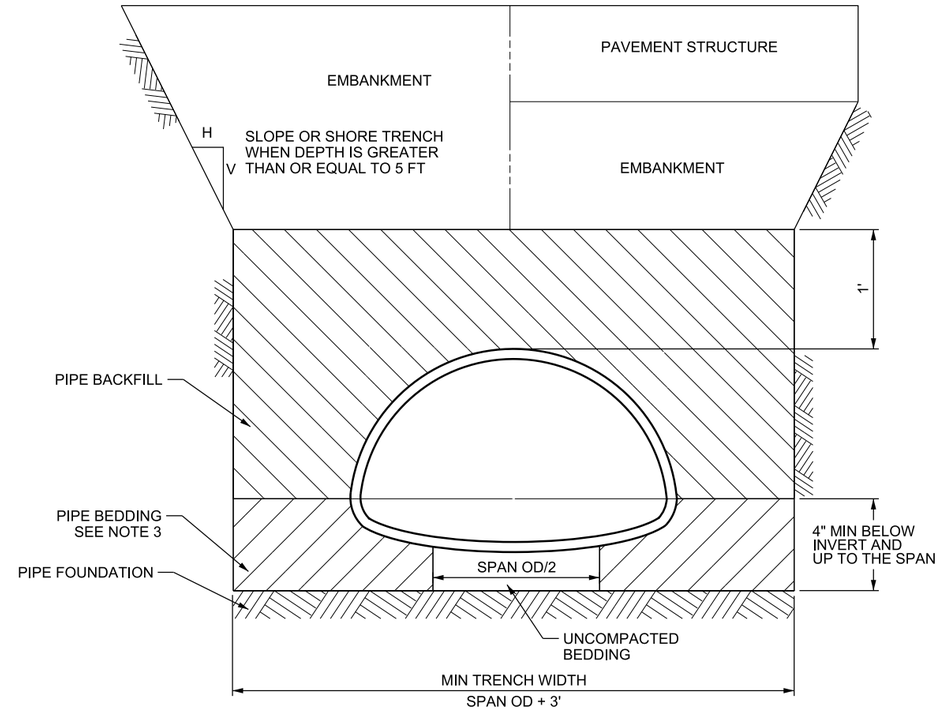

PIPE ARCH

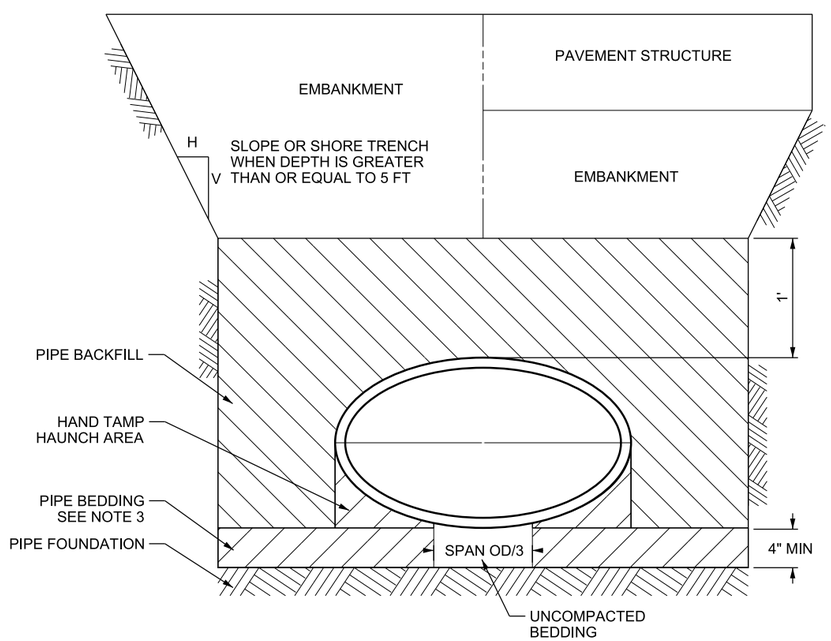

ELLIPTICAL PIPE

NOTES:

1. PLACE PLASTIC PIPE ONLY WITHIN A TRENCH. PLACE FILL MATERIAL AT OR ABOVE THE PIPE BACKFILL ELEVATION BEFORE EXCAVATION OF THE TRENCH WHEN PLACED IN AN EMBANKMENT.
2. INCREASE THE WIDTH OF THE TRENCH 2 FT ON EACH SIDE OF THE PIPE WHEN THE SURROUNDING MATERIAL IS UNSUITABLE.
3. INCREASE THE PIPE BEDDING THICKNESS TO 6 INCHES FOR FOUNDATIONS THAT CONTAIN ROCK OR OTHER UNYIELDING MATERIAL. REMOVE BOULDERS OR ROCKS WITHIN BEDDING AREA.
4. DO NOT DISTURB THE INSTALLED PIPE OR EMBEDMENT OR LEAVE VOIDS WHEN USING TRENCH BOXES AND SHIELDS.

REVISIONS

NO.	DATE	APPR.	REMARKS

UTAH DEPARTMENT OF TRANSPORTATION
STANDARD DRAWINGS FOR ROAD AND BRIDGE CONSTRUCTION
SALT LAKE CITY, UTAH

RECOMMENDED FOR APPROVAL — JAN.1, 2017 DATE
CHAIRMAN STANDARDS COMMITTEE APPROVED — JAN.1, 2017 DATE
DEPUTY DIRECTOR

DRAINAGE PIPE INSTALLATION
STANDARD DRAWING TITLE

STD. DWG. NO.
DG 5

DGN File: L:\Standard Drawings\Imperial\2017 Approved\1-All Drawings\DG05.dgn
28-NOV-2016

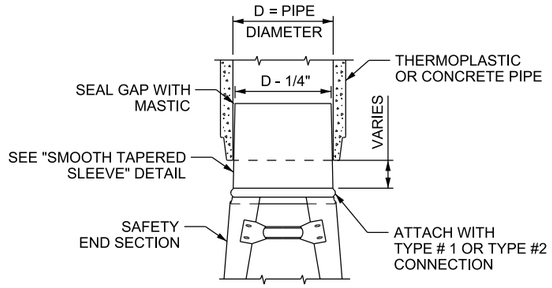

THERMOPLASTIC OR CONCRETE PIPE CONNECTION

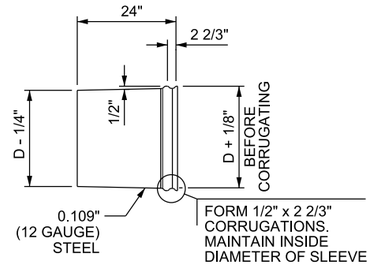

SMOOTH TAPERED SLEEVE

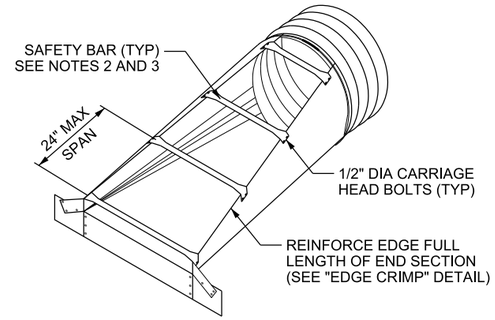

SAFETY END SECTION - PARALLEL

FOR USE WHEN SAFETY END SECTION IS PARALLEL TO MAINLINE

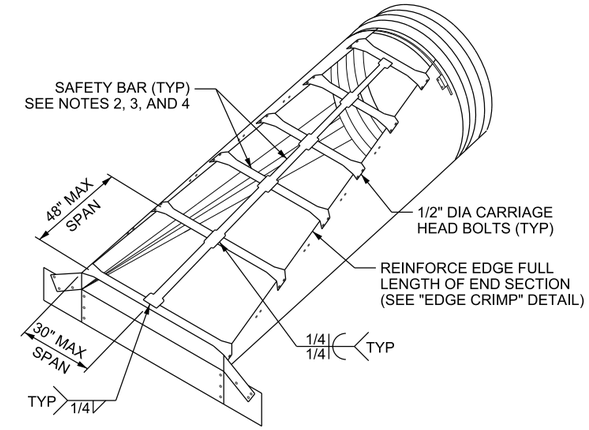

SAFETY END SECTION - CROSSING

FOR USE WHEN SAFETY END SECTION IS PERPENDICULAR TO MAINLINE

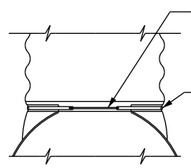

TYPE #1 CONNECTOR

FOR USE ON CORRUGATED METAL PIPE ≤ 24" DIA

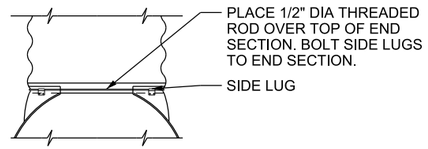

TYPE #2 CONNECTOR

FOR USE ON CORRUGATED METAL PIPE ≥ 30" DIA

CORRUGATED METAL PIPE CONNECTION

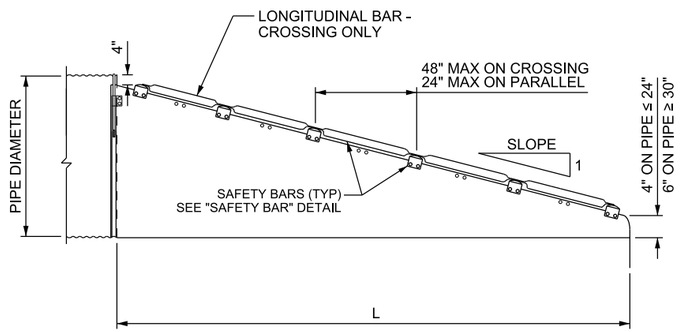

SAFETY END SECTION - ELEVATION

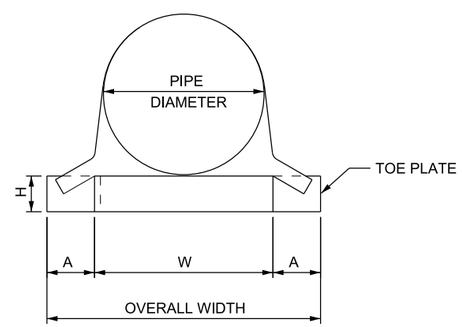

SAFETY END SECTION FRONT VIEW

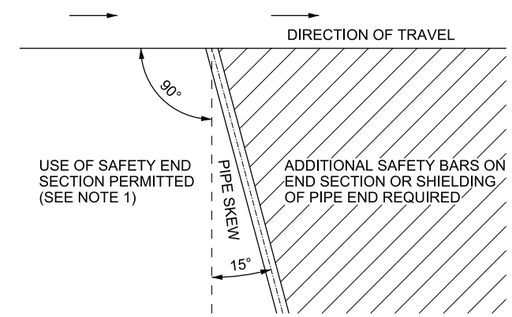

SAFETY END SECTION - CROSSING LOCATION DIAGRAM

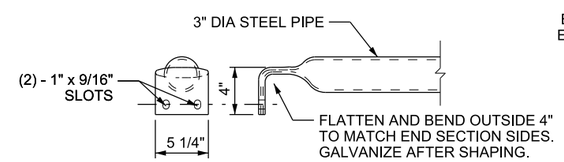

SAFETY BAR

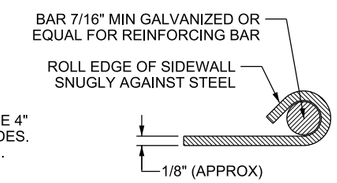

EDGE CRIMP

STEEL SAFETY END SECTIONS FOR ELLIPTICAL PIPE

PIPE SIZE (INCHES)		MIN METAL THICK INCH/GAUGE	DIMENSIONS (INCHES)					
SPAN X RISE	EQUIV DIA			H	W	OVERALL WIDTH	L	
							SLOPE = 4	SLOPE = 6
23 X 14	18	0.064/16	8	6	29	45	16	24
30 X 19	24	0.064/16	8	6	36	52	36	54
38 X 24	30	0.079/14	12	9	44	68	56	84
45 X 29	36	0.109/12	12	9	51	83	76	114
53 X 34	42	0.109/12	16	12	59	91	96	144

STEEL SAFETY END SECTIONS FOR ARCHED PIPE

PIPE SIZE (INCHES)		MIN METAL THICK INCH/GAUGE	DIMENSIONS (INCHES)						
SPAN X RISE	EQUIV DIA		A	H	W	OVERALL WIDTH	L		
							SLOPE = 4	SLOPE = 6	SLOPE = 10*
21 X 15	18	0.064/16	8	6	27	43	20	30	70
28 X 20	24	0.064/16	8	6	34	50	40	60	120
35 X 24	30	0.079/14	12	9	41	65	56	84	160
42 X 29	36	0.109/12	12	9	48	72	76	114	210
49 X 33	42	0.109/12	16	12	55	87	92	138	

* MINIMUM THICKNESS OF ALL 10:1 SLOPE END SECTIONS IS 0.109" / 12 GAUGE

STEEL SAFETY END SECTIONS FOR CIRCULAR PIPE

PIPE DIA (INCHES)	MIN METAL THICK INCH/GAUGE	DIMENSIONS (INCHES)						
		A	H	W	OVERALL WIDTH	L		
						SLOPE = 4	SLOPE = 6	SLOPE = 10*
18	0.064/16	8	6	24	40	32	48	100
24	0.064/16	8	6	30	46	56	84	160
30	0.109/12	12	9	36	60	80	120	220
36	0.109/12	12	9	42	66	104	156	280
42	0.109/12	16	12	48	80	128	192	

* MINIMUM THICKNESS OF ALL 10:1 SLOPE END SECTIONS IS 0.109" / 12 GAUGE

NOTES:

1. USE SAFETY END SECTIONS WHEN PROJECT CONSTRAINTS DO NOT ALLOW THE PIPE TO BE EXTENDED OUTSIDE THE CLEAR ZONE.
2. PROVIDE SLOTTED HOLES FOR SAFETY BAR ATTACHMENT.
3. NUMBER OF BARS REQUIRED VARIES DEPENDING ON THE LENGTH AND WIDTH OF THE END SECTION.
4. ADD LONGITUDINAL BAR WHEN WIDTH EXCEEDS 30 INCHES. WELD BARS TO CREATE ONE PIECE STRUCTURE.
5. USE GALVANIZED HARDWARE FOR CONNECTIONS.

REVISIONS

NO.	DATE	APPR.	REMARKS

UTAH DEPARTMENT OF TRANSPORTATION
STANDARD DRAWINGS FOR ROAD AND BRIDGE CONSTRUCTION
SALT LAKE CITY, UTAH

RECOMMENDED FOR APPROVAL — JAN.01.2017 DATE
CHAIRMAN STANDARDS COMMITTEE APPROVED — JAN.01.2017 DATE
DEPUTY DIRECTOR

STEEL SAFETY END SECTIONS
STANDARD DRAWING TITLE

STD. DWG. NO.
DG 6

DGN File: L:\Standard_Drawings\Imperial\2017 Approved\1-All Drawings\DG06.dgn
28-NOV-2016

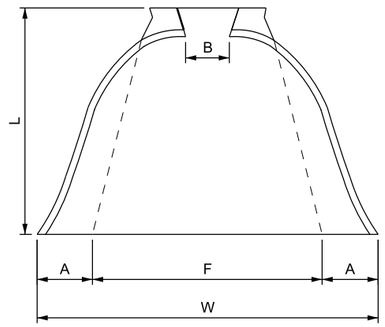

PLAN

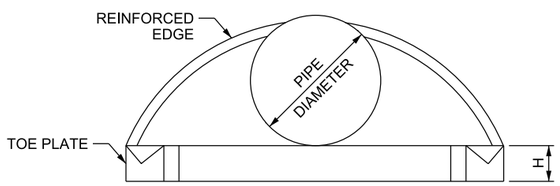

ELEVATION

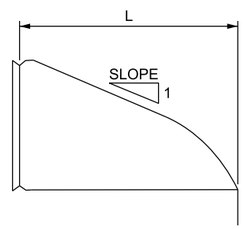

TYPICAL CROSS SECTION

STEEL END SECTIONS FOR ARCHED PIPE

PIPE SIZE (INCHES)		MIN METAL THICK INCH/GAUGE	APPROX. SLOPE	DIMENSIONS (INCHES)					
SPAN X RISE	EQUIV DIA			A	B	H	F	L	W
21 X 15	18	0.064/16	2	6	11	6	34	24	58
28 X 20	24	0.064/16	2	7	16	6	46	32	66
35 X 24	30	0.079/14	1.9	9	16	6	58	39	72
42 X 29	36	0.079/14	1.9	11	18	7	73	46	88
49 X 33	42	0.109/12	1.8	12	21	9	82	53	105

STEEL END SECTIONS FOR CIRCULAR PIPE

PIPE DIA (INCHES)	MIN METAL THICK INCH/GAUGE	APPROX. SLOPE	DIMENSIONS (INCHES)					
			A	B	H	F	L	W
18	0.064/16	2.1	7	10	6	34	31	58
24	0.064/16	2.1	9	13	6	46	41	72
30	0.079/14	2.1	11	16	8	55	51	88
36	0.079/14	2	13	19	9	70	60	105
42	0.109/12	2.1	15	25	10	82	69	122

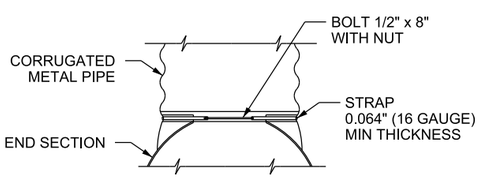

TYPE #1 CONNECTOR

FOR USE ON CORRUGATED METAL PIPE ≤ 24" DIA

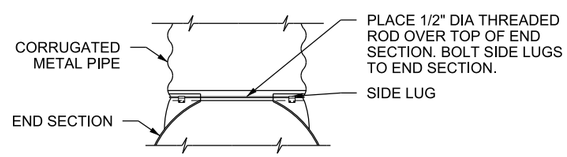

TYPE #2 CONNECTOR

FOR USE ON CORRUGATED METAL PIPE ≥ 30" DIA

CORRUGATED METAL PIPE CONNECTION

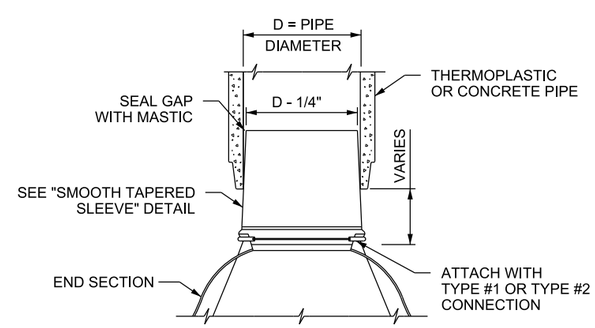

THERMOPLASTIC OR CONCRETE PIPE CONNECTION

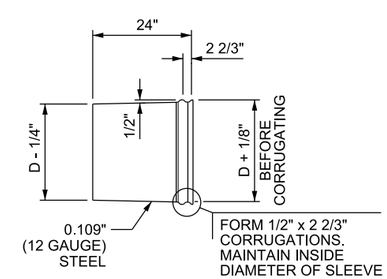

SMOOTH TAPERED SLEEVE

NOTES:

1. DO NOT USE THESE END SECTIONS WITHIN THE CLEAR ZONE.
2. DIMENSIONS OF END SECTION CAN VARY FROM THOSE SHOW IN THE TABLES DUE TO DIFFERENT MANUFACTURER'S CONFIGURATIONS.
3. USE GALVANIZED HARDWARE FOR CONNECTIONS.

REVISIONS

NO.	DATE	APPR.	REMARKS

UTAH DEPARTMENT OF TRANSPORTATION

STANDARD DRAWINGS FOR ROAD AND BRIDGE CONSTRUCTION

SALT LAKE CITY, UTAH

RECOMMENDED FOR APPROVAL — JAN.01.2017 DATE

CHAIRMAN STANDARDS COMMITTEE APPROVED — JAN.01.2017 DATE

DEPUTY DIRECTOR — DATE

STANDARD DRAWING TITLE

STEEL END SECTIONS

STD. DWG. NO.

DG 8

DGN File:L:\Standard Drawings\Imperial\2017 Approved\1-All Drawings\DG08.dgn
28-NOV-2016

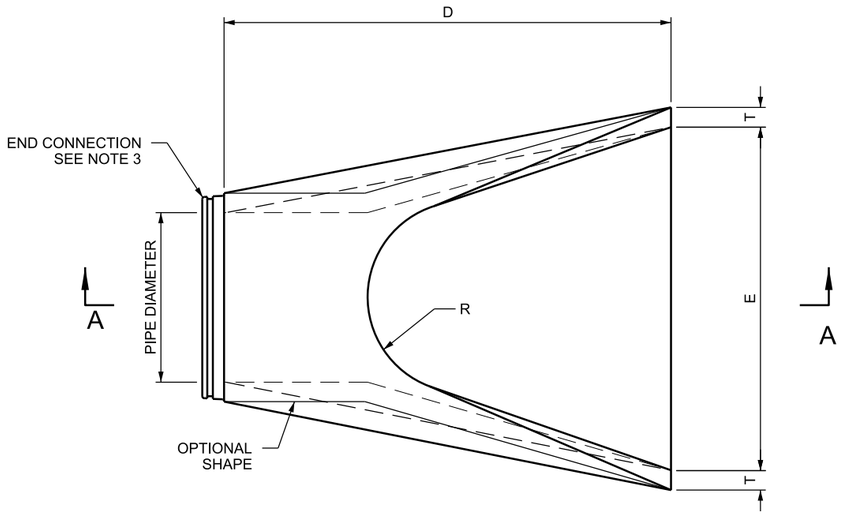

PLAN

CONCRETE END SECTIONS FOR ELLIPTICAL PIPE									
PIPE SIZE (INCHES)		APPROX. SLOPE	DIMENSIONS (INCHES)						
SPAN X RISE	EQUIV DIA		A	B	C	D	E	R	T
23 X 14	18	3.1	8	27	45	72	36	6	2 ¾
30 X 19	24	2.8	8 ½	39	33	72	48	7	3 ¼
38 X 24	30	2.9	9 ½	54	18	72	60	9	3 ½
45 X 29	36	2.7	11 ¼	60	36	96	72	12	4 ½
53 X 34	42	2.6	15 ¾	60	36	96	78	13	5

CONCRETE END SECTIONS FOR CIRCULAR PIPE									
PIPE DIA (INCHES)	APPROX. SLOPE	DIMENSIONS (INCHES)							
		A	B	C	D	E	R	T
18	2.4	9	27	46	73	36	12	2 ½
24	2.5	9 ½	43 ½	30	73 ½	48	14	3
30	2.5	12	54	19 ¾	73 ¾	60	15	3 ½
36	2.5	15	63	34 ¾	97 ¾	72	20	4
42	2.5	21	63	35	98	78	22	4 ½

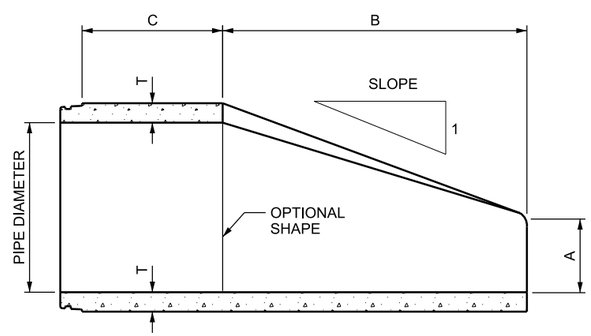

SECTION A-A

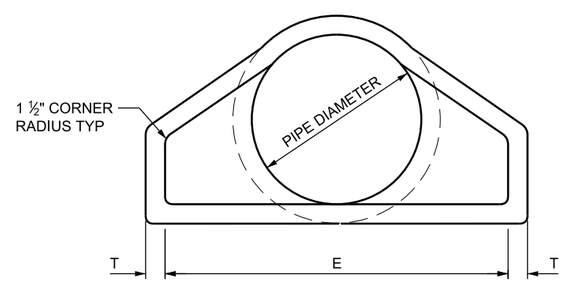

END VIEW

NOTES:

1. DO NOT USE THESE END SECTIONS WITHIN THE CLEAR ZONE.
2. DIMENSIONS OF END SECTION CAN VARY FROM THOSE SHOW IN THE TABLES DUE TO DIFFERENT MANUFACTURER'S CONFIGURATIONS.
3. USE THE SAME JOINT MATERIAL AND CONNECTION AS IN THE ADJOINING PIPE. DRAWING INDICATES SPIGOT STYLE JOINT ONLY, OTHER TYPES OF JOINTS (TONGUE, GROOVE, BELL) ARE TO BE FURNISHED AS REQUIRED.

REVISIONS

NO.	DATE	APPR.	REMARKS

UTAH DEPARTMENT OF TRANSPORTATION
STANDARD DRAWINGS FOR ROAD AND BRIDGE CONSTRUCTION
SALT LAKE CITY, UTAH

RECOMMENDED FOR APPROVAL — JAN.01.2017 DATE
CHAIRMAN STANDARDS COMMITTEE APPROVED — JAN.01.2017 DATE
DEPUTY DIRECTOR

CONCRETE END SECTIONS
STANDARD DRAWING TITLE

STD. DWG. NO.
DG 9

28-NOV-2016 DGN File: L:\Standard Drawings\Imperial\2017 Approved\1-All Drawings\DG09.dgn

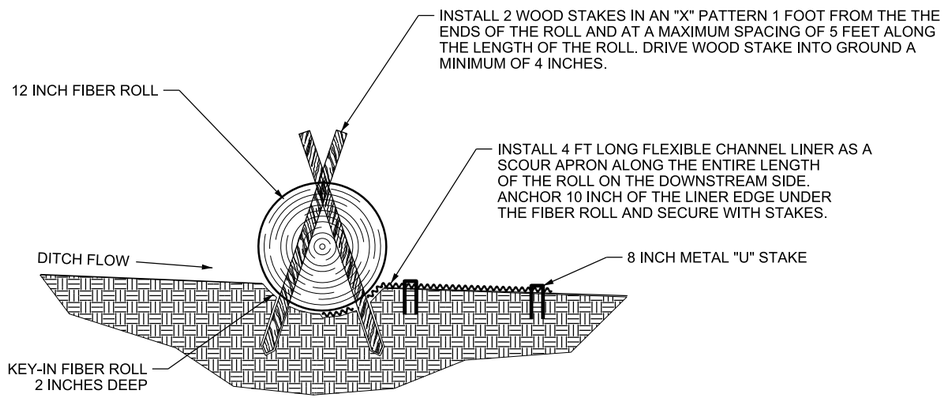

SECTION Y - Y

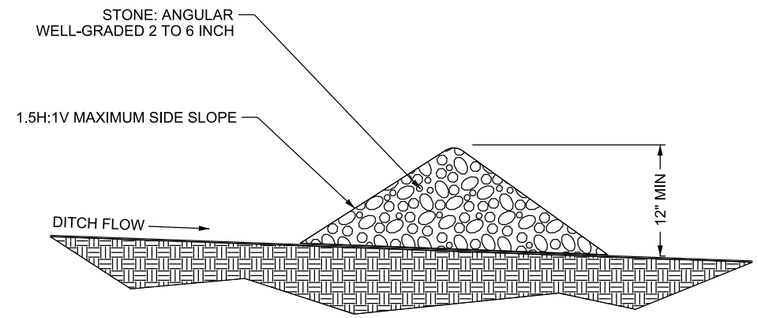

SECTION Z - Z

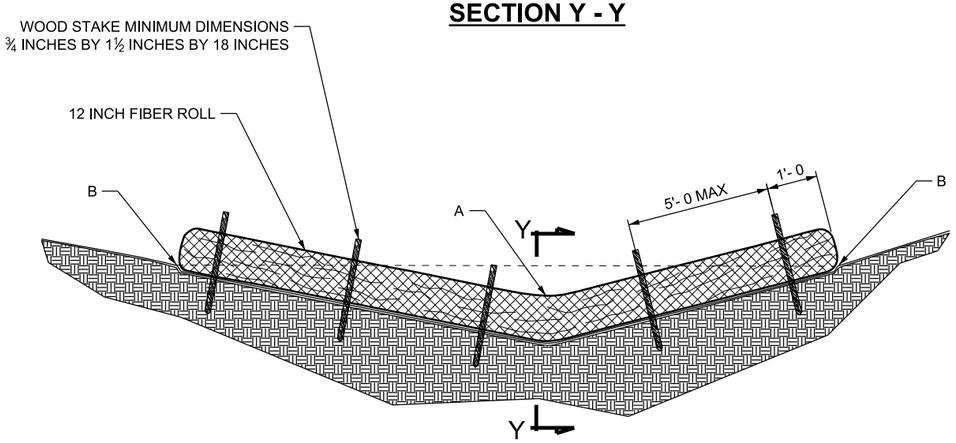

ELEVATION

CHECK DAM - FIBER ROLL

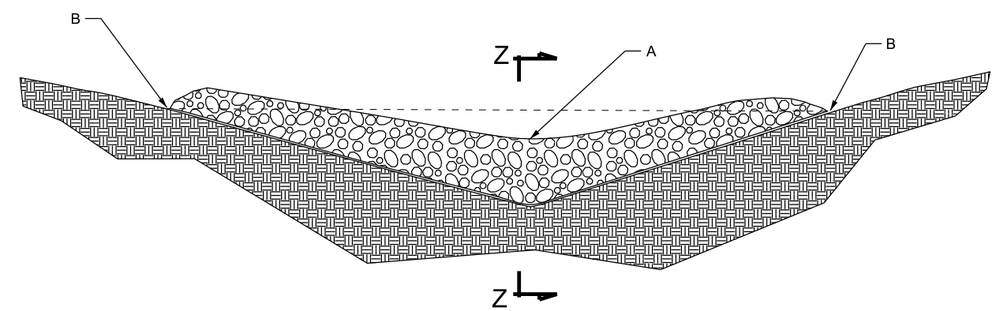

ELEVATION

CHECK DAM - STONE

MATERIAL QUANTITY CHART		
DITCH SIDE SLOPE	LENGTH (FT) OF 12 INCH DIAMETER FIBER ROLL REQUIRED FOR HALF OF DITCH	CUBIC YARDS OF STONE REQUIRED FOR HALF OF DITCH
2:1	2.5	0.17
3:1	3.5	0.24
4:1	4.7	0.31
6:1	7.0	0.45
8:1	9.4	0.60
10:1	11.7	0.75
12:1	14	0.90

EXAMPLE: A CUT DITCH WITH A 6:1 FORE SLOPE AND A 2:1 BACK SLOPE WOULD REQUIRE A 9.5 (7.0 + 2.5) FT MIN. FIBER ROLL OR 0.62 (0.45 + 0.17) CUBIC YARD MIN. OF STONE.

NOTES:

1. PLACE A CHECK DAM AT EVERY ONE FT DROP IN ELEVATION ALONG THE CUT DITCH.
2. PLACE CHECK DAMS PERPENDICULAR TO THE FLOW LINE OF THE DITCH.
3. DO NOT PLACE CHECK DAMS ACROSS NATURAL STREAM BEDS.
4. PLACE STONE CHECK DAMS OUTSIDE OF CLEAR ZONES.
5. INSTALL CHECK DAMS WITH POINT "A" A MINIMUM OF 4 INCHES LOWER THAN POINT "B".
6. REMOVE CHECK DAMS BY SPREADING STONE OR BREAKING APART AND SPREADING FIBER ROLL MATRIX MATERIAL WITHIN CUT DITCH OR COMPLETELY REMOVING FIBER ROLL.

REVISIONS

NO.	DATE	APPR.	REMARKS

UTAH DEPARTMENT OF TRANSPORTATION
STANDARD DRAWINGS FOR ROAD AND BRIDGE CONSTRUCTION
SALT LAKE CITY, UTAH

RECOMMENDED FOR APPROVAL — JAN.01.2017 DATE
CHAIRMAN STANDARDS COMMITTEE APPROVED — JAN.01.2017 DATE
DEPUTY DIRECTOR

TEMPORARY EROSION CONTROL (CHECK DAMS)
STANDARD DRAWING TITLE

STD. DWG. NO.
EN 1

DGN File:L:\Standard Drawings\Imperial\2017 Approved\1-All Drawings\EN01.dgn
28-NOV-2016

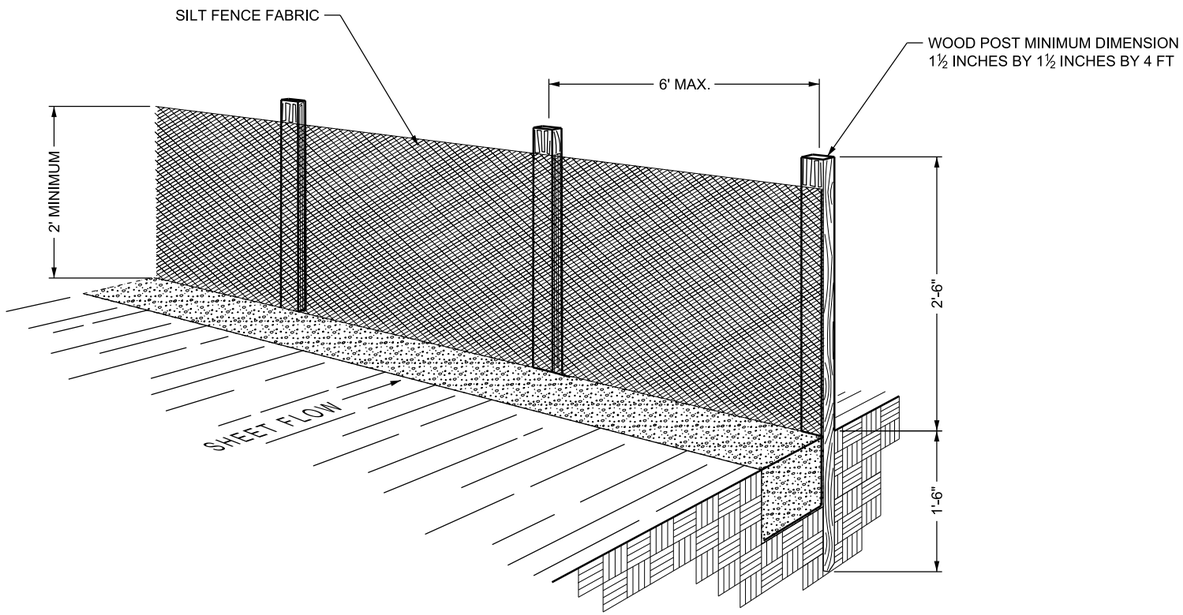

PERSPECTIVE VIEW

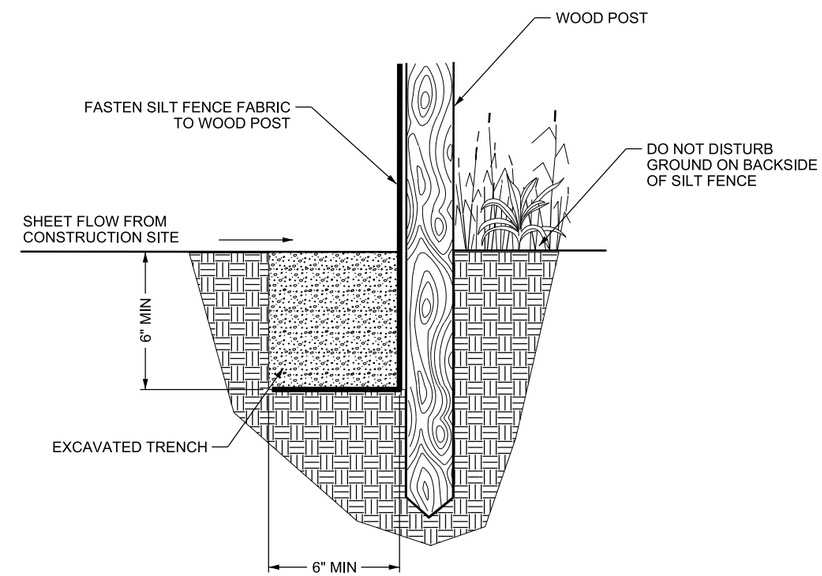

SECTION

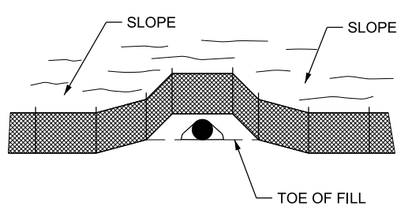

AROUND A PIPE OUTLET

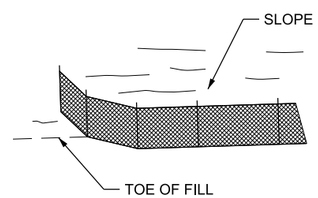

AT END OF SILT FENCE

SEE NOTE 6

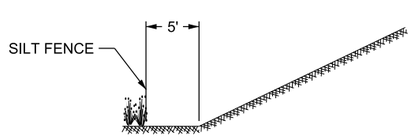

AT TOE OF FILL SLOPE

SEE NOTE 1

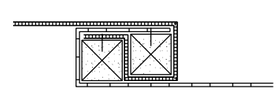

SPLICES (TOP VIEW)

SEE NOTE 8

SILT FENCE INSTALLATIONS

NOTES:

1. POSITION THE SILT FENCE 5 FT BEYOND THE TOE OF SLOPE. INSTALL SILT FENCE AT TOE OF SLOPE WHEN PLACING WITHIN OR IMMEDIATELY ADJACENT TO A WETLAND.
2. ALIGN THE FENCE ALONG THE CONTOUR AS MUCH AS POSSIBLE TO AVOID CREATING LOW POINTS ALONG THE SILT FENCE. PROVIDE AN OPENING IN THE FENCE AND INSTALL A SEDIMENT TRAP WHERE EXCESSIVE RUNOFF WILL ACCUMULATE AT A LOW POINT.
3. SECURE FIRMLY INTO GROUND BY EXCAVATING TRENCH, PLACING SILT FENCE FABRIC THEN BACKFILLING WITH EXCAVATED TRENCH MATERIAL.
4. SECURE SILT FENCE FABRIC TO WOOD POST ACCORDING TO MANUFACTURER RECOMMENDATIONS.
5. MINIMIZE DISTURBANCE WHEN EXCAVATING THE TRENCH.
6. SILT FENCE INSTALLATION EQUIPMENT MAY BE USED AS AN ALTERNATIVE INSTALLATION METHOD IF BOTTOM 6 INCHES OF SILT FENCE FABRIC IS TRENCHED FIRMLY INTO GROUND AND MEETS ALL OTHER REQUIREMENTS.
7. RUN THE ENDS OF THE FENCE SLIGHTLY UP SLOPE TO PREVENT RUNOFF FROM FLOWING AROUND THE ENDS OF THE SILT FENCE.
8. DO NOT PLACE SILT FENCE ACROSS AREAS OF CONCENTRATED FLOWS.
9. AVOID USING SPLICES ALONG THE FENCE AS MUCH AS POSSIBLE. OVERLAP THE END POSTS AND TWIST 180 DEGREES BEFORE STAKING THE WOOD POSTS WHEN NECESSARY.

REVISIONS

NO.	DATE	APPR.	REMARKS

UTAH DEPARTMENT OF TRANSPORTATION
STANDARD DRAWINGS FOR ROAD AND BRIDGE CONSTRUCTION
SALT LAKE CITY, UTAH

RECOMMENDED FOR APPROVAL — JAN.01.2017 DATE
CHAIRMAN STANDARDS COMMITTEE APPROVED — JAN.01.2017 DATE
DEPUTY DIRECTOR

TEMPORARY EROSION CONTROL (SILT FENCE)

STANDARD DRAWING TITLE

STD. DWG. NO.
EN 2

DGN File:L:\Standard Drawings\Imperial\2017 Approved\1-All Drawings\EN02.dgn
28-NOV-2016

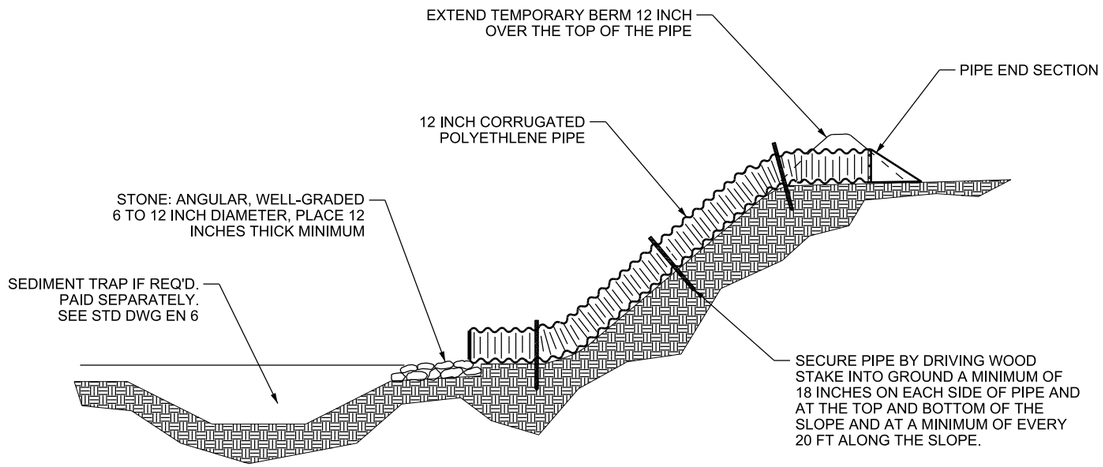

SLOPE DRAIN SECTION

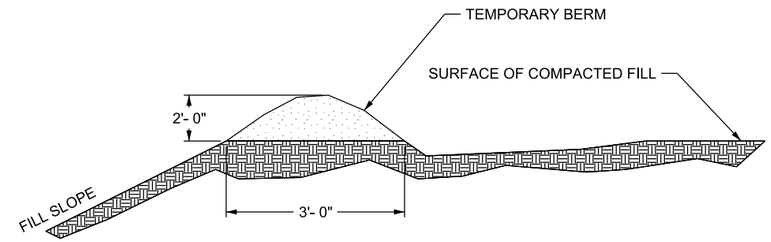

TEMPORARY BERM SECTION

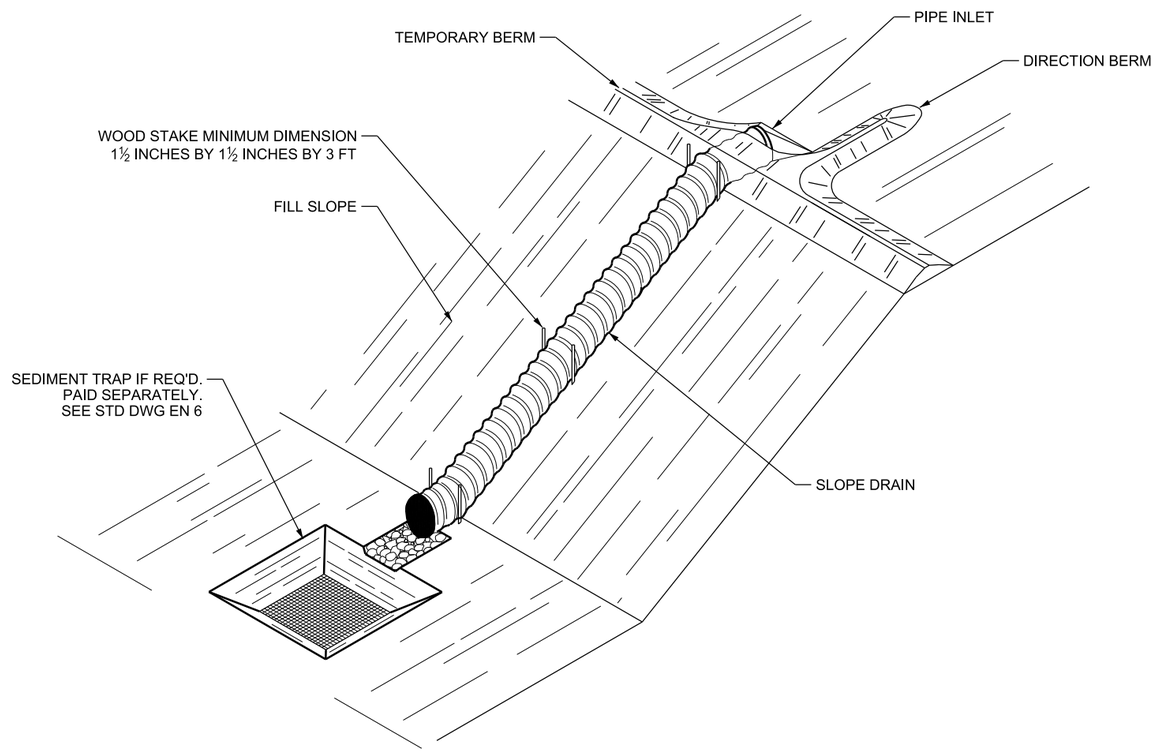

SLOPE DRAIN ISOMETRIC

NOTES FOR TEMPORARY BERM:

1. COMPACT SOIL OF TEMPORARY BERM TO MINIMUM DIMENSIONS SHOWN ABOVE TO PREVENT EROSION.
2. MAINTAIN THE TEMPORARY BERM FROM ANY EROSION.
3. REMOVE TEMPORARY BERM WHEN SURROUNDING AREAS HAVE MET FINAL STABILIZATION MEASURES OR AS NECESSARY.

NOTES FOR SLOPE DRAIN:

1. COMPACT THE SOIL SURFACE AND BERMS OF THE INLET TO PREVENT WATER FROM UNDERMINING THE PIPE AND ERODING THE SLOPE. REPAIR ANY EROSION AROUND THE INLET, OUTLET, OR SLOPE IMMEDIATELY.
2. SECURE THE PIPE TO THE GROUND SURFACE.
3. EXTEND THE SLOPE DRAIN INLET BEYOND TEMPORARY BERM TO CAPTURE RUNOFF.
4. EXTEND THE SLOPE DRAIN OUTLET A MINIMUM OF 3 FT BEYOND THE TOE OF THE SLOPE.
5. PROVIDE STONE FOR OUTLET PROTECTION.
6. INSTALL SEDIMENT TRAP AT PIPE OUTLET IF NOT POSSIBLE PROVIDE SEDIMENT TRAP AT PIPE INLET.

REVISIONS

NO.	DATE	APPR.	REMARKS

UTAH DEPARTMENT OF TRANSPORTATION
STANDARD DRAWINGS FOR ROAD AND BRIDGE CONSTRUCTION
SALT LAKE CITY, UTAH

RECOMMENDED FOR APPROVAL — JAN.01.2017 DATE
CHAIRMAN STANDARDS COMMITTEE APPROVED — JAN.01.2017 DATE
DEPUTY DIRECTOR

TEMPORARY EROSION CONTROL (SLOPE DRAIN AND TEMPORARY BERM)
STANDARD DRAWING TITLE

STD. DWG. NO.
EN 3

DGN File:L:\Standard Drawings\Imperial\2017 Approved\1-All Drawings\EN03.dgn
28-NOV-2016

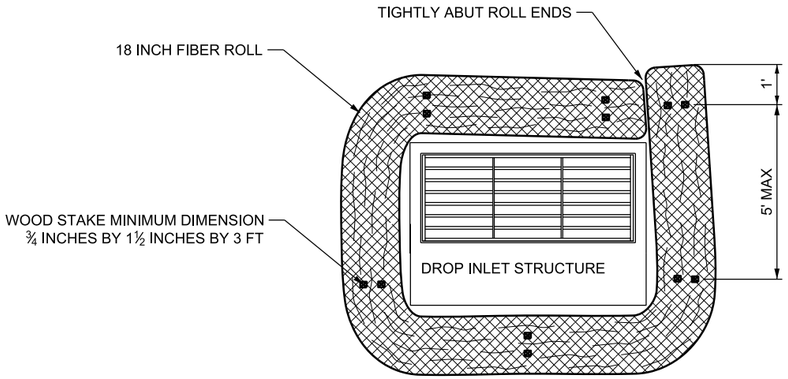

PLAN

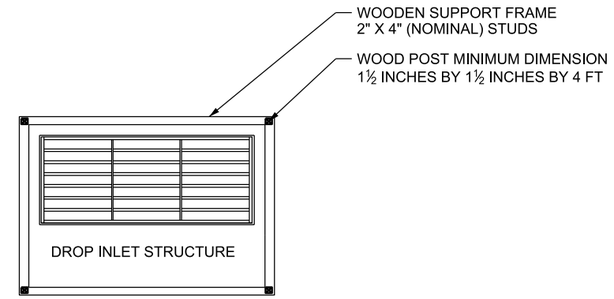

PLAN

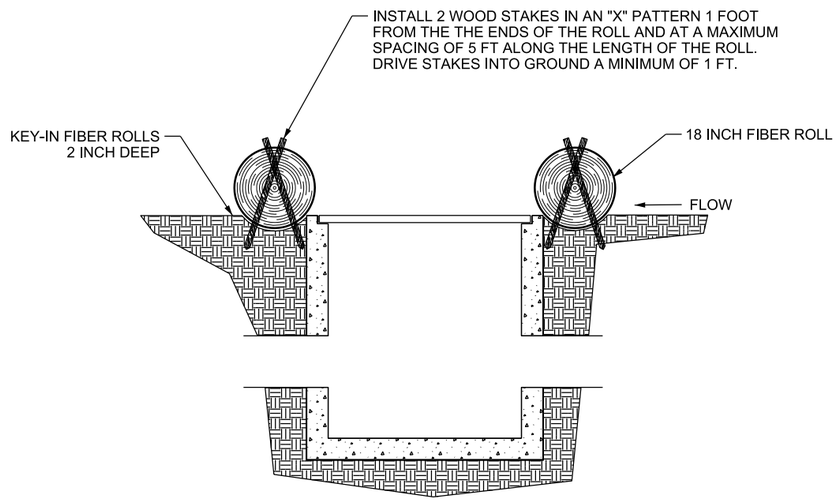

SECTION

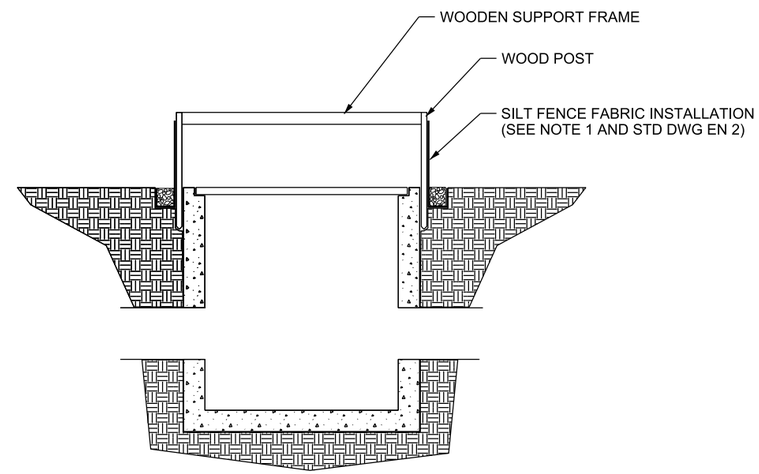

SECTION

DROP-INLET BARRIER - FIBER ROLL

NOTES:

1. KEY-IN FIBER ROLLS AROUND THE PERIMETER OF THE DROP INLET STRUCTURE AND STAKE AS SHOWN.
2. OVERLAP THE ENDS OF THE FIBER ROLL AT LEAST 18 INCHES.
3. INSTALL FIBER ROLLS IN MEDIAN AREAS SO THAT THE TOPS ARE NOT HIGHER IN ELEVATION THAN THE ADJACENT ROADWAY.

DROP-INLET BARRIER - SILT FENCE

NOTES:

1. ENTRENCH THE BOTTOM 18 INCH OF SILT FENCE SECURELY IN THE GROUND AROUND THE PERIMETER OF THE DROP INLET.
2. DRIVE POSTS AT EACH CORNER OF THE INLET STRUCTURE. PLACE ANOTHER POST OR POSTS BETWEEN THEM IF THE DISTANCE BETWEEN CORNER POSTS EXCEEDS 4 FT.
3. BUILD WOODEN SUPPORT FRAME MADE OF WOOD STUDS AND SECURE TO THE TOP OF POSTS.
4. CONSTRUCT SILT FENCE IN MEDIAN AREAS SO THAT THE TOP OF SILT FENCE IS NOT HIGHER IN ELEVATION THAN THE ADJACENT ROADWAY.

REVISIONS

NO.	DATE	APPR.	REMARKS

UTAH DEPARTMENT OF TRANSPORTATION
STANDARD DRAWINGS FOR ROAD AND BRIDGE CONSTRUCTION
SALT LAKE CITY, UTAH

RECOMMENDED FOR APPROVAL — JAN.01.2017 DATE
CHAIRMAN STANDARDS COMMITTEE APPROVED — JAN.01.2017 DATE
DEPUTY DIRECTOR

TEMPORARY EROSION CONTROL (DROP-INLET BARRIERS)

STANDARD DRAWING TITLE

STD. DWG. NO.
EN 4

28-NOV-2016 DGN File:L:\Standard Drawings\Imperial\2017 Approved\1-All Drawings\EN04.dgn

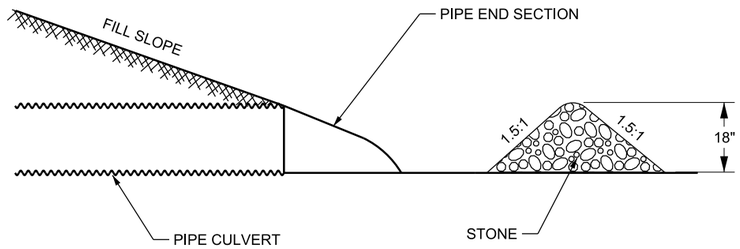

SECTION A - A

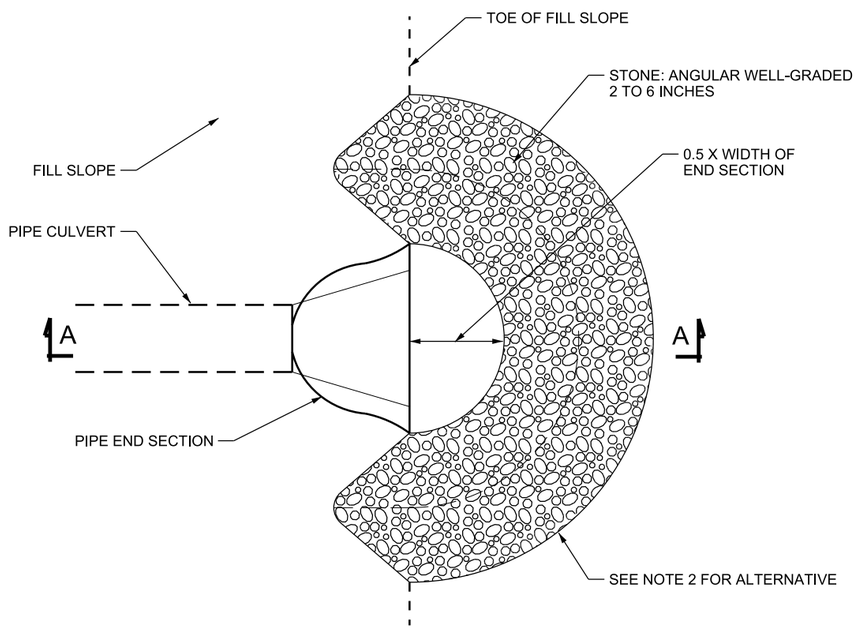

PLAN

PIPE-INLET BARRIER - STONE

NOTES:

1. REMOVE THE BARRIER BY SPREADING THE STONE ALONG THE CUT DITCH.
2. AN 18-INCH FIBER ROLL MAY BE USED AS AN ALTERNATIVE TO A STONE BARRIER. STAKE AND KEY-IN FIBER ROLL AS SHOWN IN EN SERIES STD DWGS.
3. ALLOW RUNOFF TO FLOW THROUGH THE BARRIER AND ENTER THE PIPE CULVERT.
4. DO NOT PLACE BARRIERS ACROSS NATURAL CHANNELS FLOWING TO THE PIPE INLET.

REVISIONS

NO.	DATE	APPR.	REMARKS

UTAH DEPARTMENT OF TRANSPORTATION
STANDARD DRAWINGS FOR ROAD AND BRIDGE CONSTRUCTION
SALT LAKE CITY, UTAH

RECOMMENDED FOR APPROVAL — JAN.01.2017 DATE
CHAIRMAN STANDARDS COMMITTEE APPROVED — JAN.01.2017 DATE
DEPUTY DIRECTOR

TEMPORARY
EROSION CONTROL
(PIPE-INLET BARRIERS)

STANDARD DRAWING TITLE

STD. DWG. NO.
EN 5

28-NOV-2016 DGN File: L:\Standard Drawings\Imperial\2017 Approved\1-All Drawings\EN05.dgn

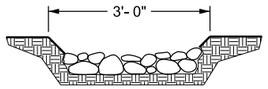

SECTION A - A

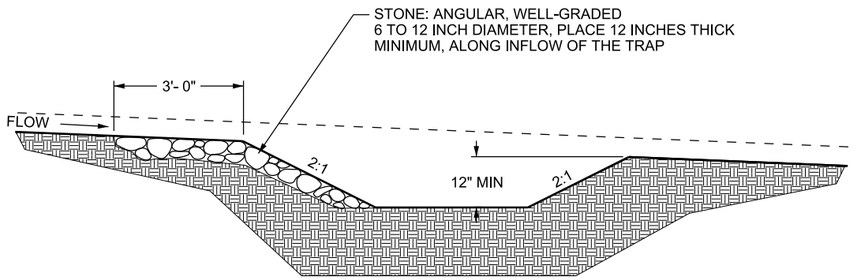

SECTION B - B

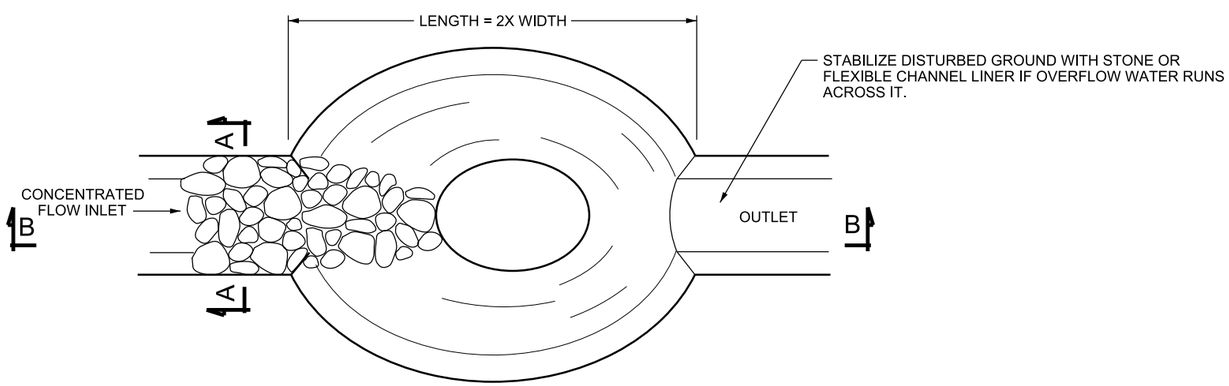

SEDIMENT TRAP PLAN

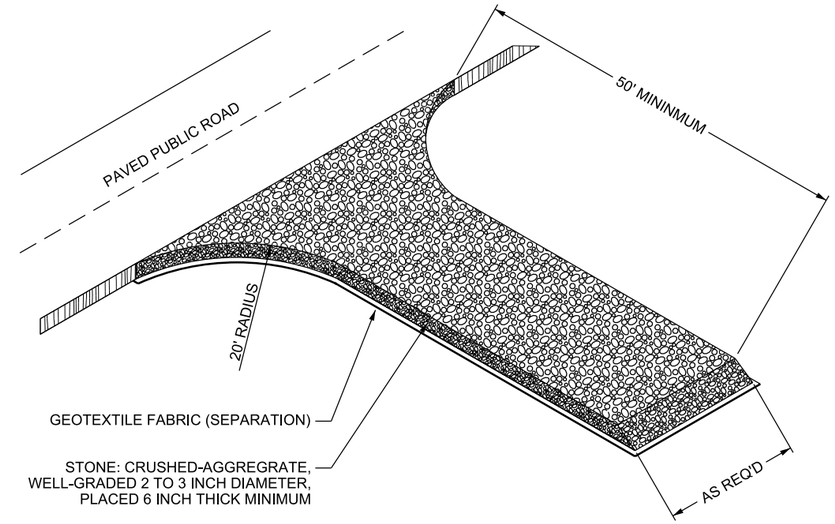

STABILIZED CONSTRUCTION ENTRANCE

NOTES FOR STABLILIZED CONSTRUCTION ENTRANCE:

1. PLACE GEOTEXTILE FABRIC BENEATH LIMITS OF STONE.
2. PREVENT VEHICLES LEAVING THE CONSTRUCTION SITE TO TRACK MUD ONTO PAVED ROADS.

REVISIONS

NO.	DATE	APPR.	REMARKS

UTAH DEPARTMENT OF TRANSPORTATION
STANDARD DRAWINGS FOR ROAD AND BRIDGE CONSTRUCTION
SALT LAKE CITY, UTAH

RECOMMENDED FOR APPROVAL — JAN.01, 2017 DATE
CHAIRMAN STANDARDS COMMITTEE APPROVED — JAN.01, 2017 DATE
DEPUTY DIRECTOR

TEMPORARY EROSION CONTROL (SEDIMENT TRAP AND STABILIZED CONSTRUCTION ENTRANCE)
STANDARD DRAWING TITLE

STD. DWG. NO.
EN 6

28-NOV-2016 DGN File:L:\Standard Drawings\Imperial\2017 Approved\1-All Drawings\EN06.dgn

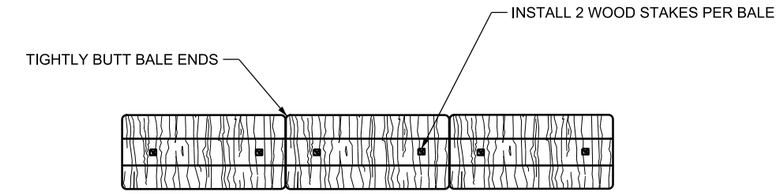

STRAW BALE BARRIER PLAN

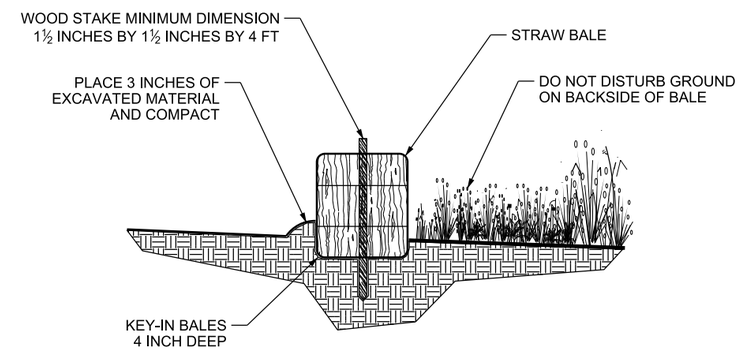

SECTION

NOTES FOR STRAW BALEBARRER:

1. PLACE STRAW BALE BARRIERS BEFORE EARTH DISTURBING ACTIVITIES.
2. DO NOT PLACE STRAW BALE BARRIERS ACROSS AREAS OF CONCENTRATED FLOW.
3. REMOVE BALES AND WOOD STAKES, LEVEL AND SEED THE AREA. BALES MAY BE BUSTED APART AND SPREAD AS MULCH.

REVISIONS

NO.	DATE	APPR.	REMARKS

UTAH DEPARTMENT OF TRANSPORTATION
STANDARD DRAWINGS FOR ROAD AND BRIDGE CONSTRUCTION
SALT LAKE CITY, UTAH

RECOMMENDED FOR APPROVAL — JAN.01.2017 DATE
CHAIRMAN STANDARDS COMMITTEE — JAN.01.2017 DATE
APPROVED
DEPUTY DIRECTOR

TEMPORARY
EROSION CONTROL
(STRAW BALE BARRIER)

STANDARD DRAWING TITLE

STD. DWG. NO.
EN 7

28-NOV-2016 DGN File:L:\Standard Drawings\Imperial\2017 Approved\1-All Drawings\EN07.dgn

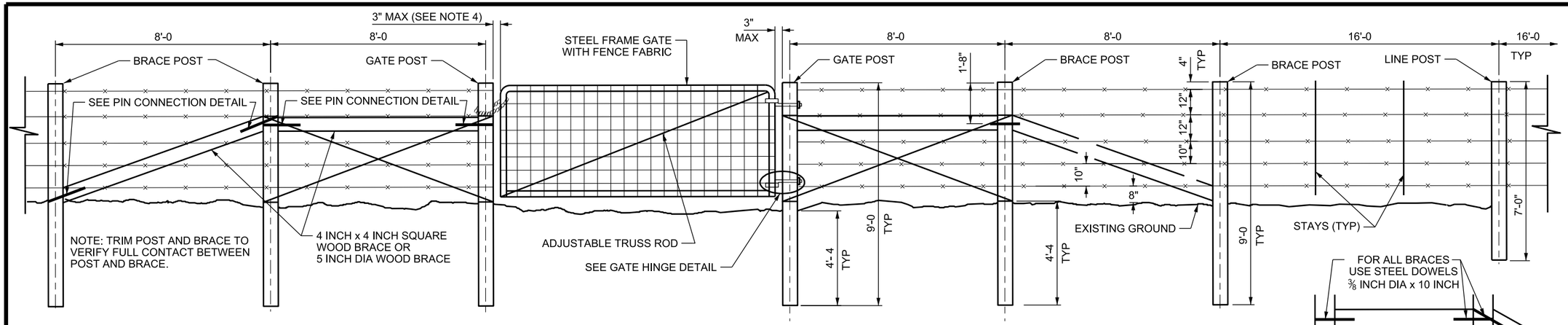

GATE BRACE

GATE BRACE

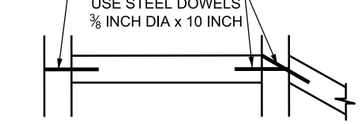

PIN CONNECTION DETAIL

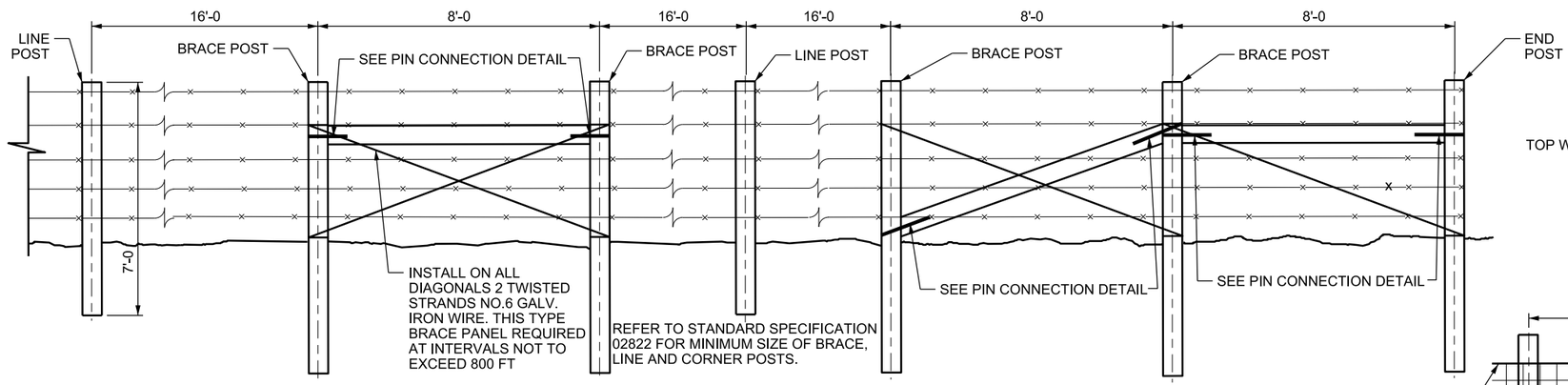

LINE BRACE

TERMINAL BRACE

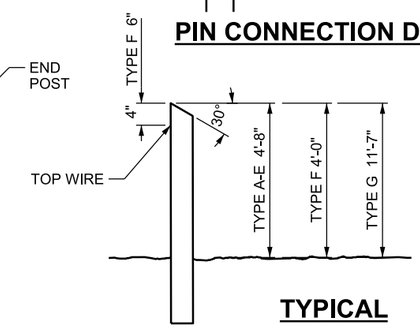

TYPICAL

GATE HINGE DETAIL

WOOD POSTS

INSTALLATION WITH WOOD POST

NOTES: (TYPE A SHOWN, ALL OTHERS SIMILAR)

1. POST SIZE, SPACING AND BRACING FOR TYPES A,B,D,E AND F FENCE THE SAME AS SHOWN IN INSTALLATION WITH WOOD POSTS ABOVE. USE TWO STAYS EVENLY SPACED BETWEEN EACH SET OF POSTS.
2. SEE STD DWG FG 1B FOR BRACE TO CORNER POST DETAILS.
3. GATE FRAME USE STEEL PIPE 1.875 INCH OUTSIDE DIAMETER WITH WEIGHT OF 2.72 LB/FT.
4. PROVIDE AT LEAST A 4 INCH GAP BETWEEN GATE FRAMES TO ALLOW FOR LATCH WHERE DOUBLER GATES ARE INSTALLED.

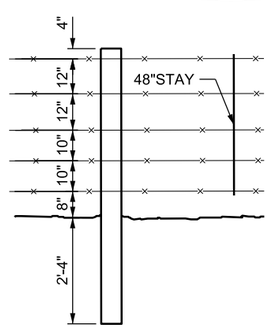

TYPE A

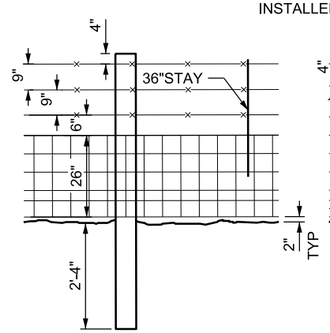

TYPE B

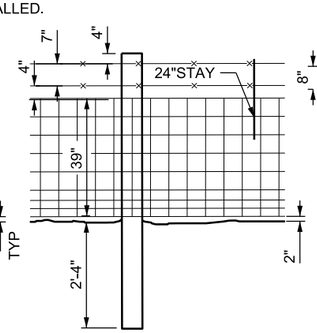

TYPE D

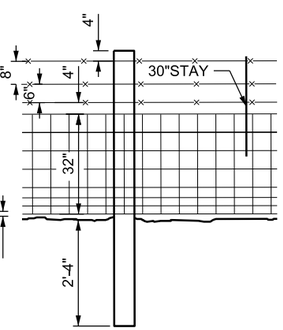

TYPE E

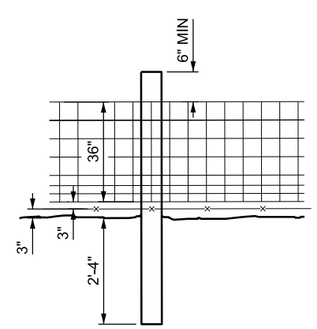

TYPE F

TO BE INSTALLED IN DEER COUNTRY

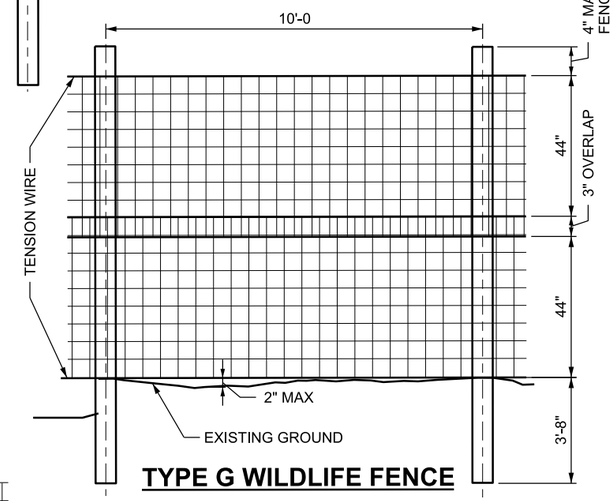

TYPE G WILDLIFE FENCE

DESIGN NOTES:

A. INSTALL 4 FT GATE ON TYPE G WILDLIFE FENCE ADJACENT TO ANIMAL CROSSING STRUCTURES.

NOTES:

1. 3 INCH MIN OVERLAP REQUIRED AND TIE OR CLAMP TOGETHER EVERY 18 INCHES USING HOG RINGS OR OTHER TYPES OF TIES OR CLAMPS.
2. PLACE BOTTOM TENSION WIRE AND FENCE FABRIC AT EXISTING GROUND AT POSTS AND WITHIN 2 INCHES OF EXISTING GROUND BETWEEN POSTS.
3. TIE OR CLAMP BOTTOM AND TOP TENSION WIRE TO FENCE FABRIC EVERY 24 INCHES USING HOG RINGS OR OTHER TYPES OF TIES OR CLAMPS.
4. A SINGLE FENCE FABRIC MAY BE USED IF MEETS OVERALL MINIMUM DIMENSIONS.

REVISIONS

NO.	DATE	APPR.	REMARKS

UTAH DEPARTMENT OF TRANSPORTATION
STANDARD DRAWINGS FOR ROAD AND BRIDGE CONSTRUCTION
SALT LAKE CITY, UTAH

RECOMMENDED FOR APPROVAL — JAN.01.2017 DATE
CHAIRMAN STANDARDS COMMITTEE APPROVED — JAN.01.2017 DATE
DEPUTY DIRECTOR — DATE

RIGHT OF WAY
FENCE AND GATES
(WOOD POST)

STANDARD DRAWING TITLE

STD. DWG. NO.
FG 1A

28-NOV-2016 DGN File:L:\Standard_Drawings\Imperial\2017 Approved\1-01 Drawings\FG01A.dgn

INSTALLATION WITH WOOD POSTS (TYPICAL)

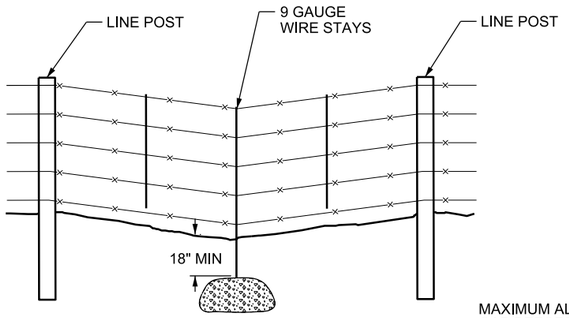

PLACE 100 LB MINIMUM ROCK OR CONCRETE AFTER THE FENCE FABRIC IS STRETCHED

2-9 GAUGE WIRES SPLICED TO STAY AND BOTTOM WIRE

MAXIMUM ALLOWABLE GAP BEFORE PLACING TIE DOWN
TYPE A-10"
TYPE B,D, & E-4"
TYPE F-5"
TYPE G-1"

TYPICAL SAG SECTION

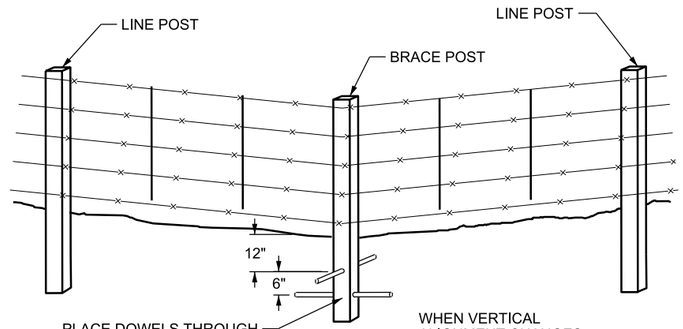

PLACE DOWELS THROUGH WOOD POST TO ANCHOR (#4 EPOXY COATED REBAR- 18" MINIMUM LENGTH)

WHEN VERTICAL ALIGNMENT CHANGES 3' IN 8' USE LINE BRACE

TYPICAL VERTICAL ALIGNMENT CHANGE

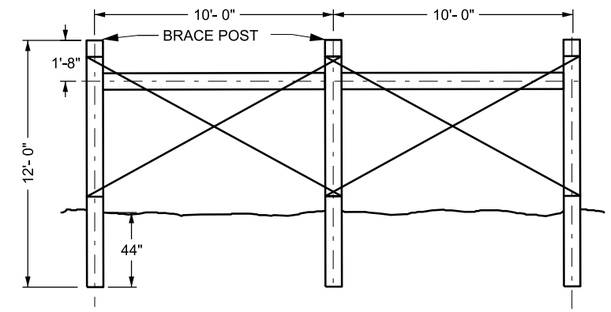

LINE BRACE FOR TYPE G FENCE

BRACE AT INTERVALS NOT EXCEEDING 400 FT

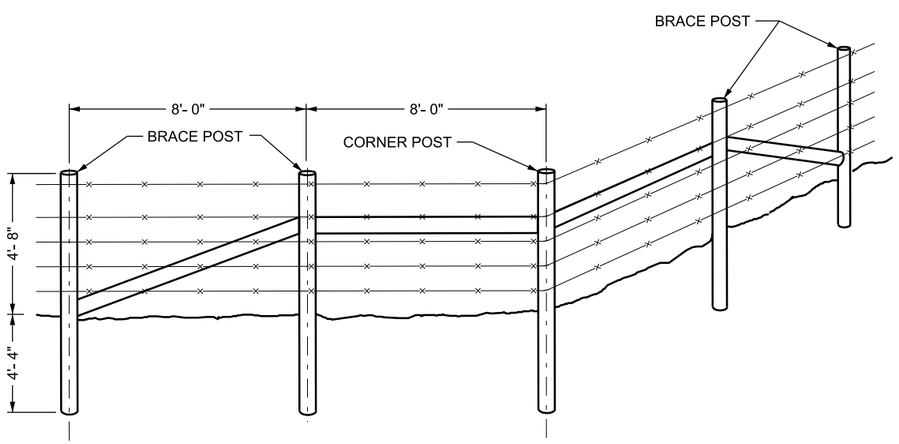

CORNER BRACE

USE CORNER BRACE ON ALL FENCE LINE DEVIATION WHEN WOOD POSTS ARE USED

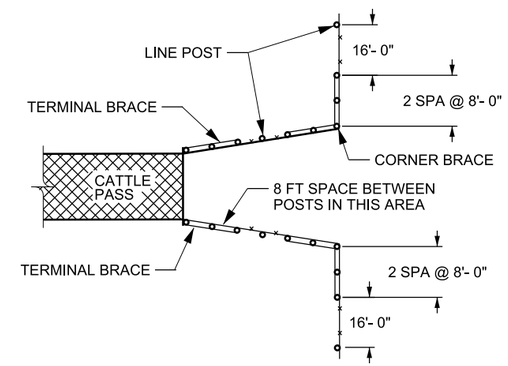

CATTLE PASS FENCE DETAIL

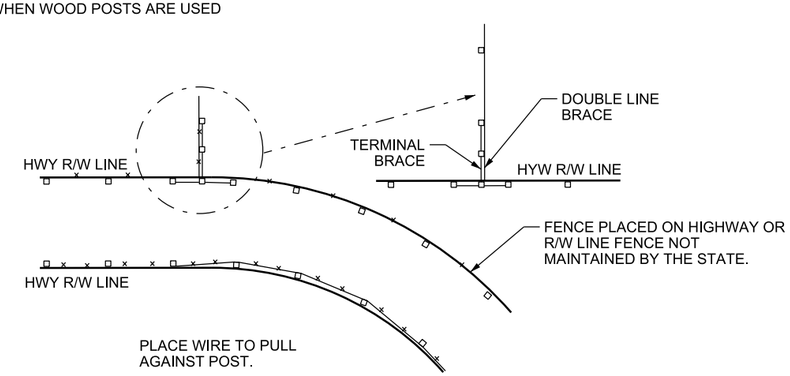

PLACE WIRE TO PULL AGAINST POST.

POST & WIRE LOCATION

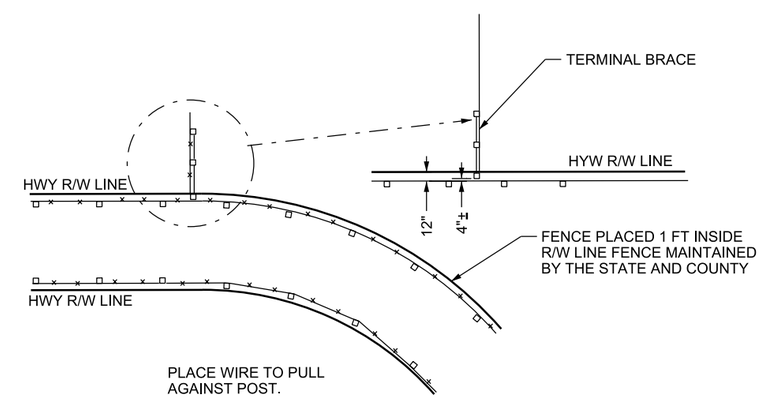

PLACE WIRE TO PULL AGAINST POST.

POST & WIRE LOCATION

REVISIONS

NO.	DATE	APPR.	REMARKS

UTAH DEPARTMENT OF TRANSPORTATION
STANDARD DRAWINGS FOR ROAD AND BRIDGE CONSTRUCTION
SALT LAKE CITY, UTAH

RECOMMENDED FOR APPROVAL — JAN.01, 2017 DATE
CHAIRMAN STANDARDS COMMITTEE APPROVED — JAN.01, 2017 DATE
DEPUTY DIRECTOR

RIGHT OF WAY
FENCE AND GATES
(WOOD POST)

STANDARD DRAWING TITLE

STD. DWG. NO.
FG 1B

28-NOV-2016 DGN File:L:\Standard_Drawings\Imperial\2017 Approved\1-All Drawings\FG01B.dgn

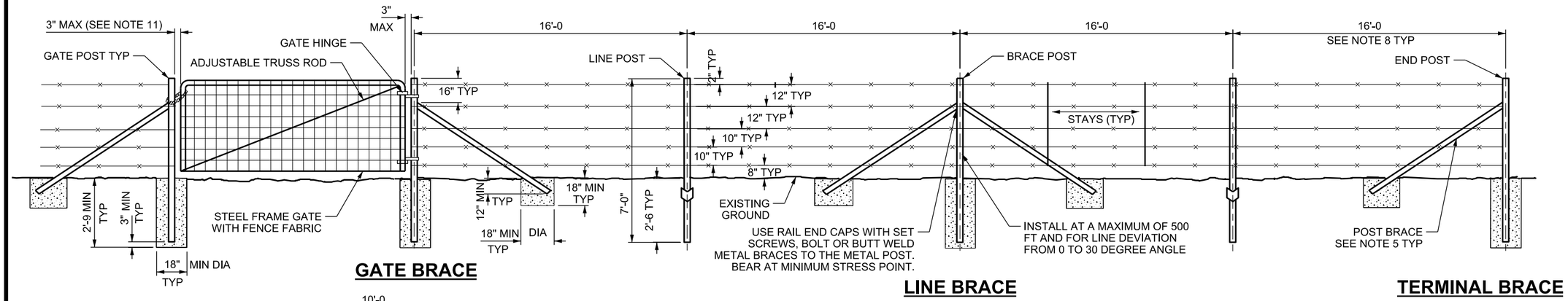

GATE BRACE **LINE BRACE** **TERMINAL BRACE**

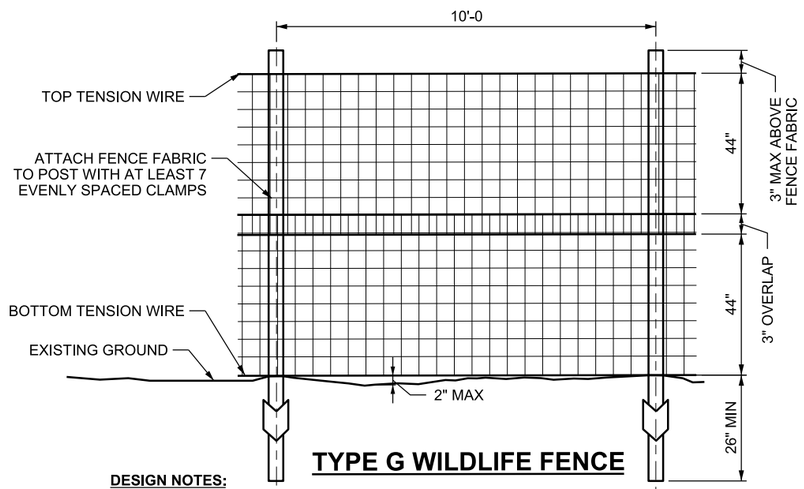

TYPE G WILDLIFE FENCE

DESIGN NOTES:

A. INSTALL 4 FT GATE ON TYPE G WILDLIFE FENCE ADJACENT TO ANIMAL CROSSING STRUCTURES.

NOTES:

1. 3 INCH MIN OVERLAP REQUIRED AND TIE OR CLAMP TOGETHER EVERY 18 INCHES USING HOG RINGS OR OTHER TYPES OF TIES OR CLAMPS.
2. PLACE BOTTOM TENSION WIRE AND FENCE FABRIC AT EXISTING GROUND AT POSTS AND WITHIN 2 INCHES OF EXISTING GROUND BETWEEN POSTS.
3. TIE OR CLAMP BOTTOM AND TOP TENSION WIRE TO FENCE FABRIC EVERY 24 INCHES USING HOG RINGS OR OTHER TYPES OF TIES OR CLAMPS.
4. A SINGLE FENCE FABRIC MAY BE USED IF MEETS OVERALL MINIMUM DIMENSIONS.

INSTALLATION WITH METAL POSTS

NOTES: (TYPE A SHOWN, ALL OTHERS SIMILAR)

1. SET GATE POST, BRACE POST, END POST, CORNER POST, AND POST BRACE IN CLASS "B" CONCRETE. SEE STD DWG FG 2B FOR CORNER BRACE DETAIL.
2. LINE POSTS FOR TYPE A, B, D, E, F & G FENCE
   A. "T", "Y", OR "U" STEEL CHANNEL SECTIONS, MINIMUM WEIGHT 1.33 LB/FT OF LENGTH OR STEEL PIPE,1.900 INCH OUTSIDE DIAMETER SCHEDULE 40 PIPE, WEIGHT 2.72 LB/FT OF LENGTH OR HIGH TENSILE TRIPLE COATED STEEL PIPE, WEIGHT 2.23 LB/FT OF LENGTH.
   B. LINE POSTS FOR TYPE A, B, D, E, & F FENCE: 7 FT LENGTH.
   C. LINE POSTS FOR TYPE G FENCE: 10 FT LENGTH.
3. BRACE POSTS, CORNER POSTS, AND END POSTS
   A. TYPE A, B, D, E, & F FENCES USE 2.5 INCH x 2.5 INCH x 0.25 INCH STEEL ANGLE, MINIMUM WEIGHT 4.10 LB/FT OR STEEL PIPE 2.375 INCH OUTSIDE DIAMETER, WEIGHT 3.65 LB/FT OR HIGH TENSILE TRIPLE COATED STEEL, 2.375 INCH OUTSIDE DIAMETER WEIGHT 3.11 LB/FT.
   B. TYPE G FENCE USE STEEL PIPE 2.375 INCH OUTSIDE DIAMETER, WEIGHT 3.65 LB/FT OR HIGH TENSILE TRIPLE COATED STEEL, 2.375 INCH OUTSIDE DIAMETER WEIGHT 3.11 LB/FT.
4. GATE POSTS
   A. GATE WIDTHS 6 FT AND LESS USE STEEL PIPE WITH OUTSIDE DIAMETER 2.375 INCH AND WEIGHT 3.65 LB/FT OR HIGH TENSILE TRIPLE COATED STEEL, 2.375 INCH OUTSIDE DIAMETER WEIGHT 3.11 LB/FT.
   B. GATE WIDTHS GREATER THAN 6 FT USE STEEL PIPE WITH OUTSIDE DIAMETER 3.50 INCH AND WEIGHT 7.58 LB/FT.
5. POST BRACES TO MATCH POST TYPE AND SIZE.
6. USE CORNER BRACE ON FENCE LINE DEVIATIONS GREATER THAN 30 DEGREE ANGLE. USE CORNER BRACE ON TYPE G FENCE WITH DEVIATIONS GREATER THAN 17 DEGREE ANGLE. SEE STD DWG FG 2B FOR CORNER BRACE DETAILS.
7. TERMINATE FENCE FABRIC AND BARBED WIRE AT EACH CORNER POST.
8. USE 10 FT SPACING IN AREAS OF FARM ANIMAL USE OR AS SHOWN.
9. SPACING AND BRACING ARE AS SHOWN IN INSTALLATION WITH METAL POST ABOVE FOR FENCE TYPES A, B, D, E AND F POST SIZE. SPACE 2 STAYS EVENLY BETWEEN EACH SET OF POSTS.
10. GATE FRAME USE STEEL PIPE 1.875 INCH OUTSIDE DIAMETER WITH WEIGHT OF 2.72 LB/FT.
11. WHERE DOUBLE GATES ARE INSTALLED PROVIDE AT LEAST A 4 INCH GAP BETWEEN GATE FRAMES TO ALLOW FOR LATCH.

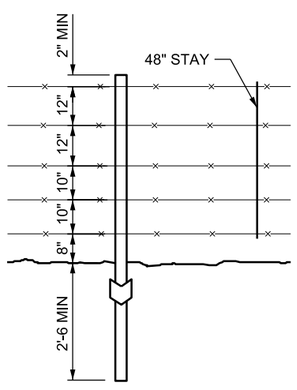

TYPE A

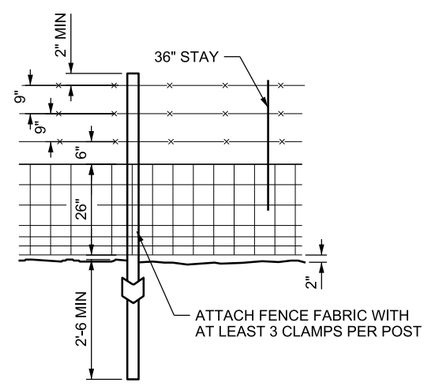

TYPE B

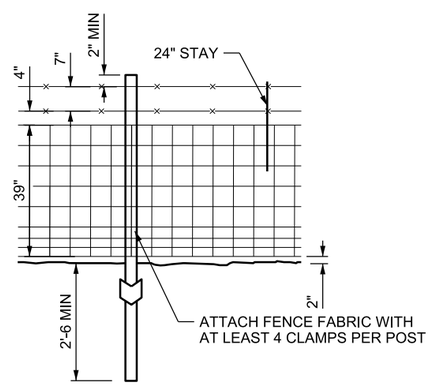

TYPE D

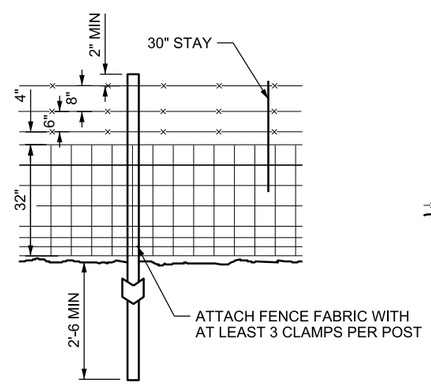

TYPE E

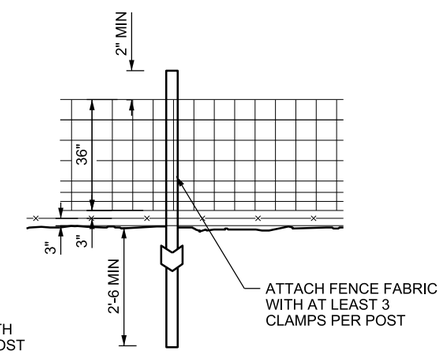

TYPE F

TO BE INSTALLED IN DEER COUNTRY

REVISIONS

NO.	DATE	APPR.	REMARKS

UTAH DEPARTMENT OF TRANSPORTATION
STANDARD DRAWINGS FOR ROAD AND BRIDGE CONSTRUCTION
SALT LAKE CITY, UTAH

RECOMMENDED FOR APPROVAL — JAN.01, 2017 DATE
CHAIRMAN STANDARDS COMMITTEE APPROVED — JAN.01, 2017 DATE
DEPUTY DIRECTOR

RIGHT OF WAY FENCE AND GATES (METAL POST)

STANDARD DRAWING TITLE

STD. DWG. NO.
FG 2A

DGN File:L:\Standard Drawings\Imperial\2017 Approved\1-All Drawings\FG02A.dgn
28-NOV-2016

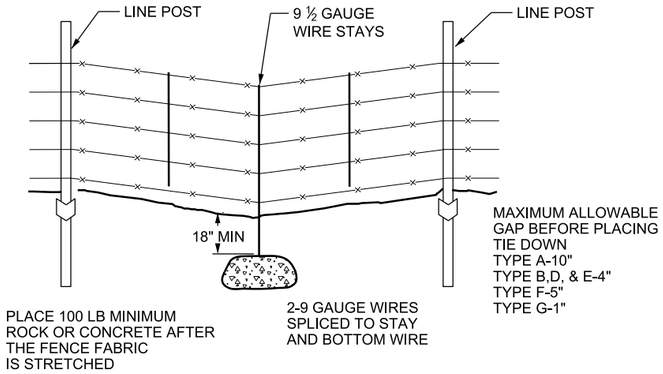

TYPICAL SAG SECTION

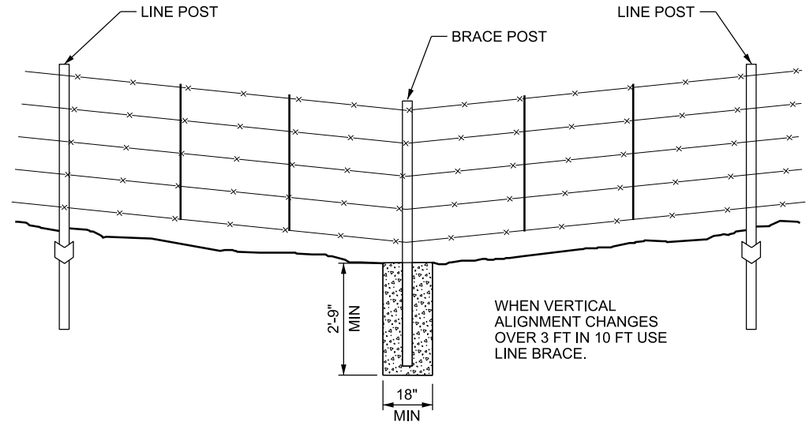

TYPICAL VERTICAL ALIGNMENT CHANGE

INSTALLATION WITH METAL POSTS (TYPICAL)

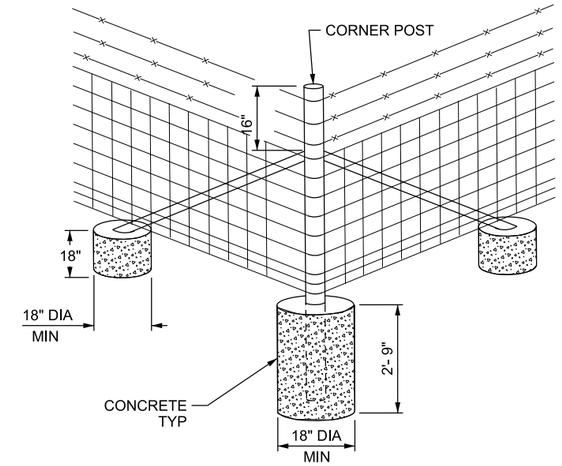

CORNER BRACE

SEE NOTE 6 STD DWG FG 2A

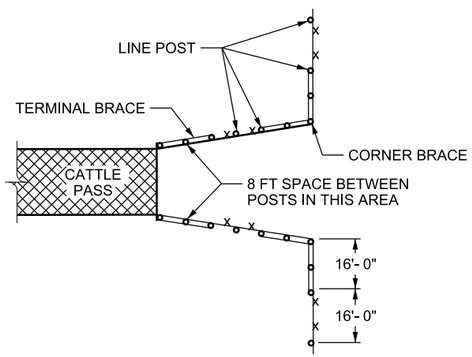

CATTLE PASS FENCE DETAIL

NOTE: LAP THE 50 INCH MESH WIRE 4 INCH TIE OR CLAMP 50 INCH MESH WIRE TOGETHER. THE SPACING NOT TO EXCEED 2 FT SPACING OF CONNECTINGS.

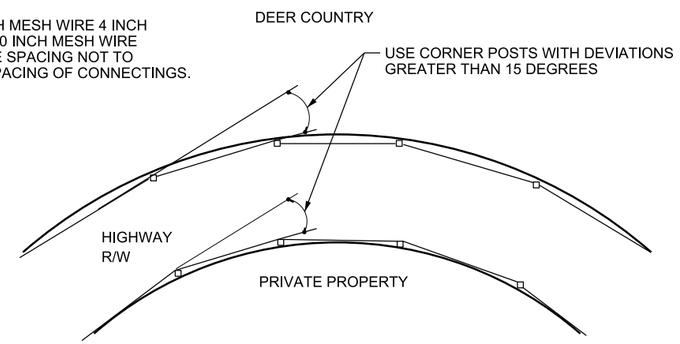

DEER BARRIER ON CURVES

SEE NOTE 6 STD DWG FG 2A

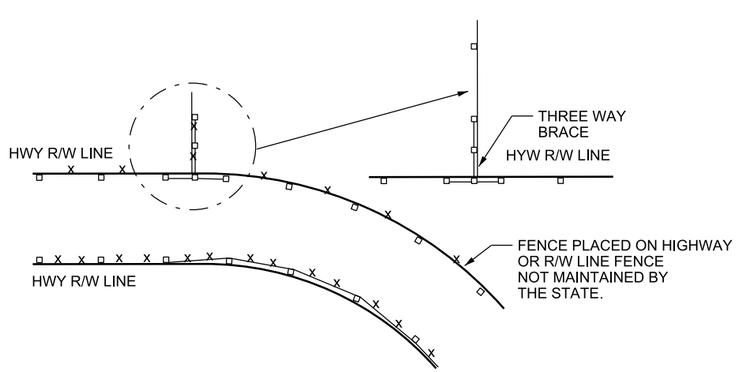

POST & WIRE LOCATION

PLACE WIRE TO PULL AGAINST POST

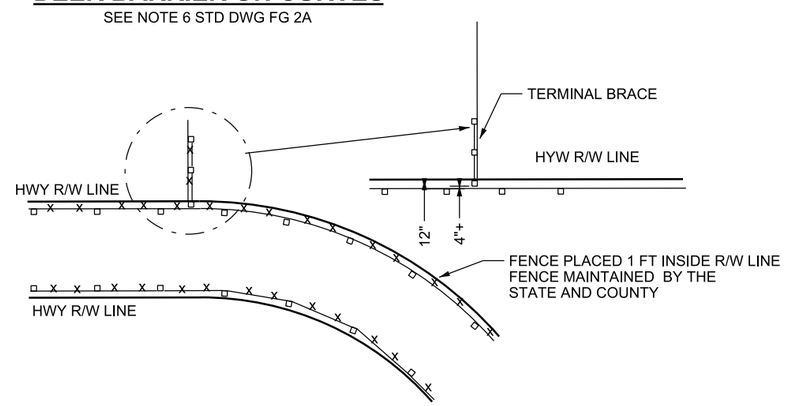

POST & WIRE LOCATION

PLACE WIRE TO PULL AGAINST POST

REVISIONS

NO.	DATE	APPR.	REMARKS

UTAH DEPARTMENT OF TRANSPORTATION
STANDARD DRAWINGS FOR ROAD AND BRIDGE CONSTRUCTION
SALT LAKE CITY, UTAH

RECOMMENDED FOR APPROVAL — JAN.01.2017 DATE
CHAIRMAN STANDARDS COMMITTEE APPROVED — JAN.01.2017 DATE
DEPUTY DIRECTOR

RIGHT OF WAY
FENCE AND GATES
(METAL POST)

STANDARD DRAWING TITLE

STD. DWG. NO.
FG 2B

DGN File:L:\Standard Drawings\Imperial\2017 Approved\1-All Drawings\FG02B.dgn
28-NOV-2016

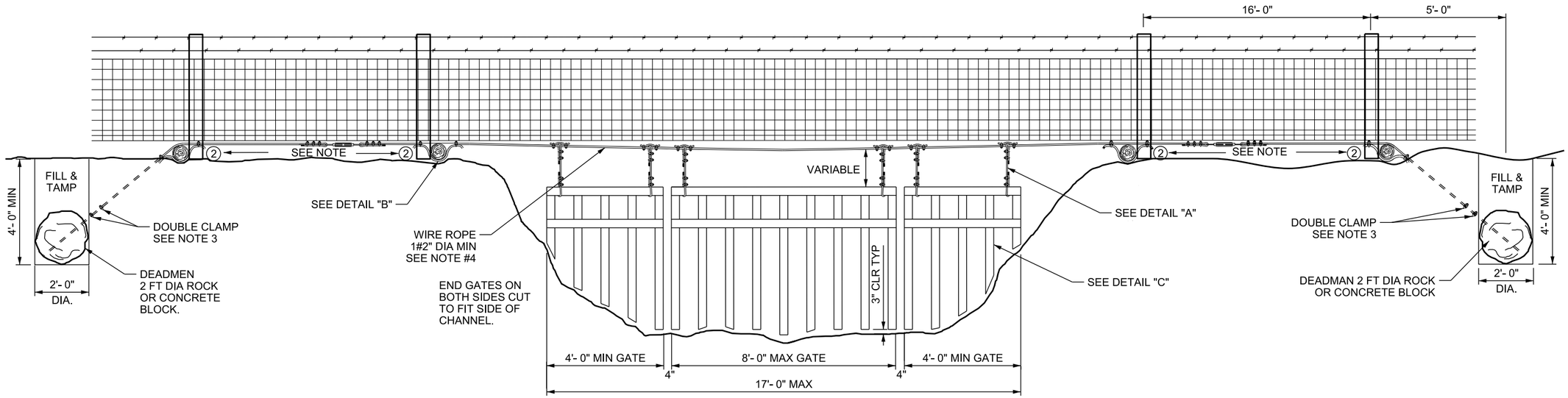

INSTALLATION DETAIL

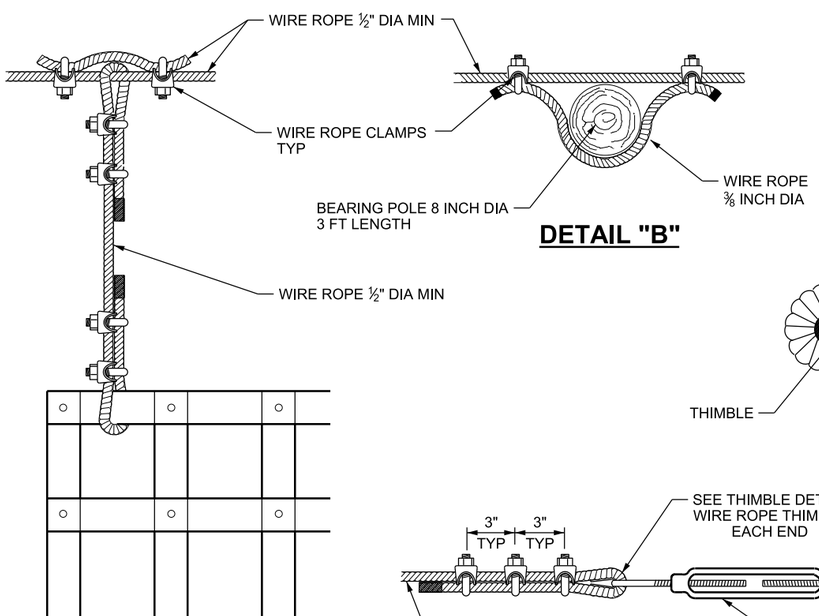

DETAIL "B"

DETAIL "A"

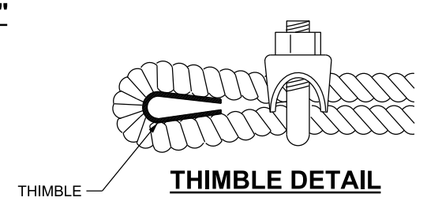

THIMBLE DETAIL

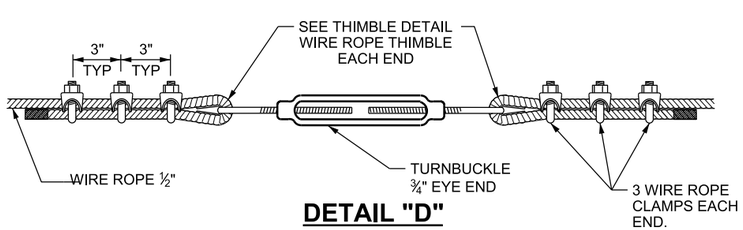

DETAIL "D"

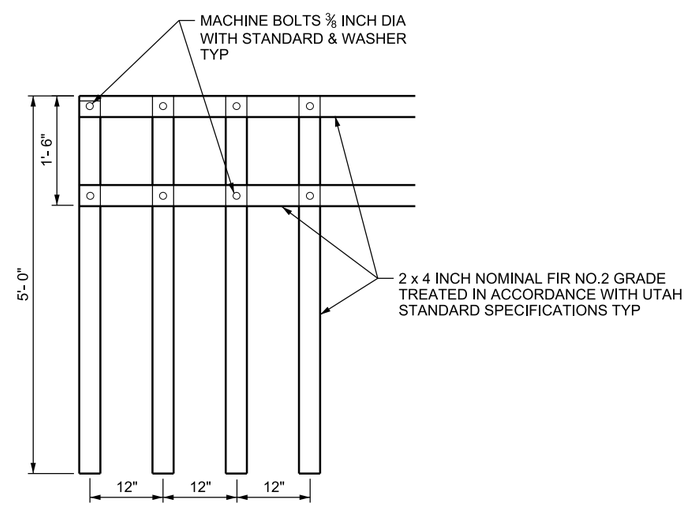

DETAIL "C"

NOTES:

1. INSTALL BEARING POLES, DEADMAN, AND TURN BUCKLE THE SAME ON BOTH SIDES ON THE CHANNEL.
2. INSTALL WIRE ROPE ON THE UPSTREAM SIDE OF THE FENCE POSTS.
3. WRAP WIRE ROPE AROUND ROCK AND CLAMP WITH A DOUBLE CLAMP.
4. USE ½ INCH DIA WIRE 6 x 12 INCH WITH A BREAKING STRENGTH OF 10,000 LB.

REVISIONS

NO.	DATE	APPR.	REMARKS

UTAH DEPARTMENT OF TRANSPORTATION
STANDARD DRAWINGS FOR ROAD AND BRIDGE CONSTRUCTION
SALT LAKE CITY, UTAH

RECOMMENDED FOR APPROVAL — JAN.01.2017 DATE
CHAIRMAN STANDARDS COMMITTEE APPROVED — JAN.01.2017 DATE
DEPUTY DIRECTOR — DATE

SWING GATES TYPE I
FOR GATES
LESS THAN 17 FT

STANDARD DRAWING TITLE

STD. DWG. NO.
FG 3

DGN File: L:\Standard Drawings\Imperial\2017 Approved\1-All Drawings\FG03.dgn
28-NOV-2016

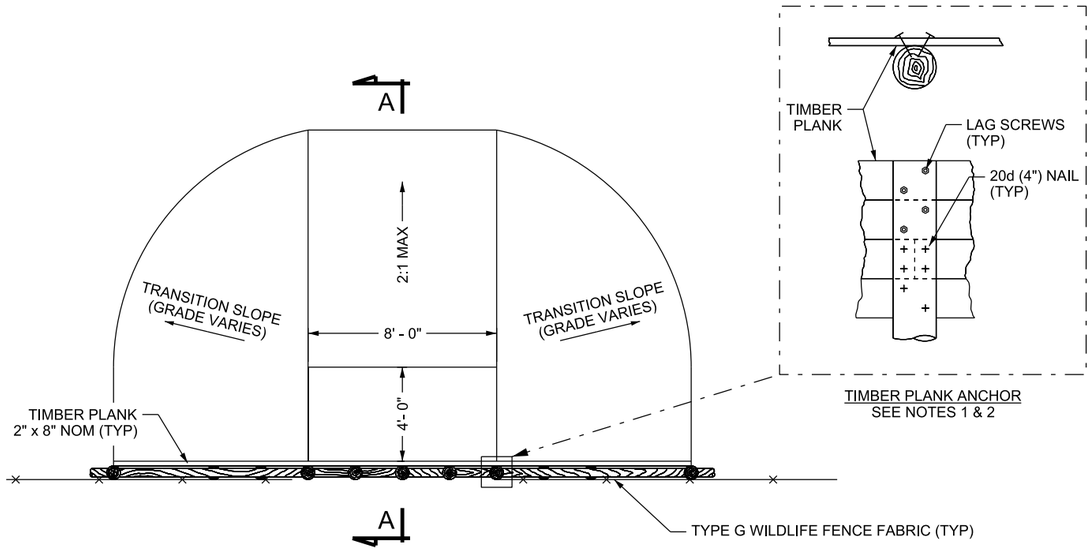

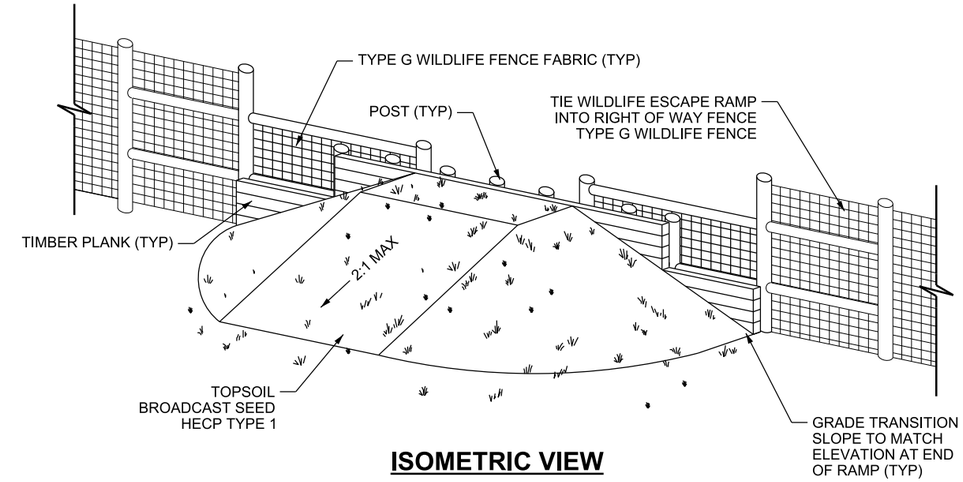

ISOMETRIC VIEW

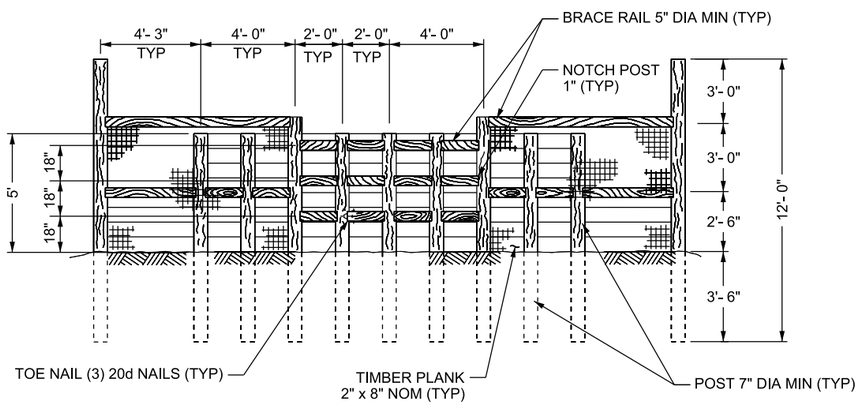

SECTION

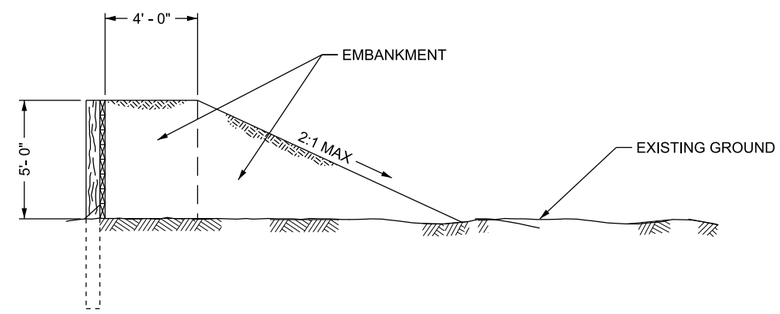

SECTION A-A

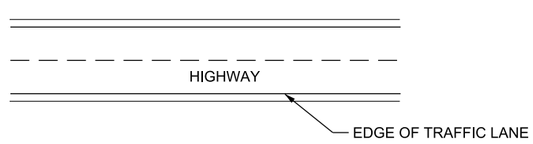

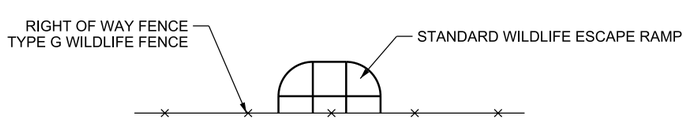

PLAN

NOTES:

1. ATTACH THE UPPER TWO PLANKS TO EACH POST USING TWO LAG SCREWS (5/16 INCH x 4 INCH ZINC PLATTED STEEL).
2. ATTACH OTHER PLANKS TO EACH POSTS USING TWO 20d (4 INCH) NAILS PER PLANK.
3. SEE STD DWG FG 1A, FG 1B, FG 2A, AND FG 2B FOR RIGHT OF WAY FENCE DETAILS.
4. USE TIMBER PLANKS FOR ALL HORIZONTAL BACKING.
5. SECURE BRACE RAILS TO POSTS AT NOTCHED LOCATIONS BY DRIVING THREE 20d (4 INCH) NAILS THROUGH THE RAILS AND INTO POSTS.

REVISIONS

NO.	DATE	APPR.	REMARKS

UTAH DEPARTMENT OF TRANSPORTATION
STANDARD DRAWINGS FOR ROAD AND BRIDGE CONSTRUCTION
SALT LAKE CITY, UTAH

RECOMMENDED FOR APPROVAL — JAN.01.2017 DATE
CHAIRMAN STANDARDS COMMITTEE APPROVED — JAN.01.2017 DATE
DEPUTY DIRECTOR

STANDARD WILDLIFE ESCAPE RAMP DETAILS

STANDARD DRAWING TITLE

STD. DWG. NO.
FG 4A

DGN File:L:\Standard Drawings\Imperial\2017 Approved\1-All Drawings\FG04A.dgn
28-NOV-2016

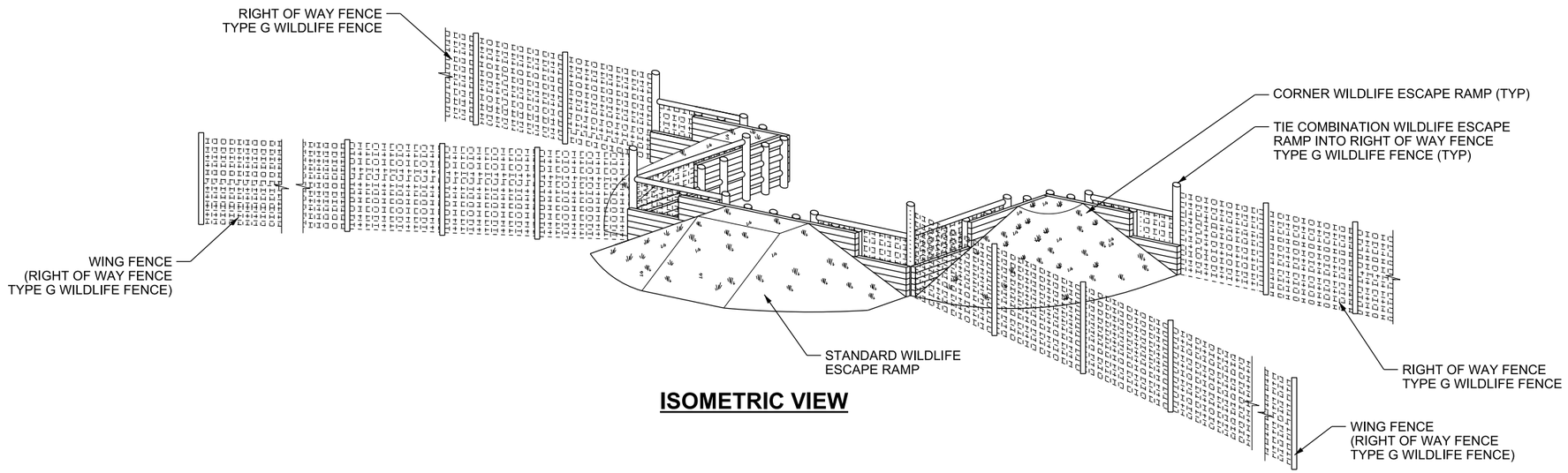

ISOMETRIC VIEW

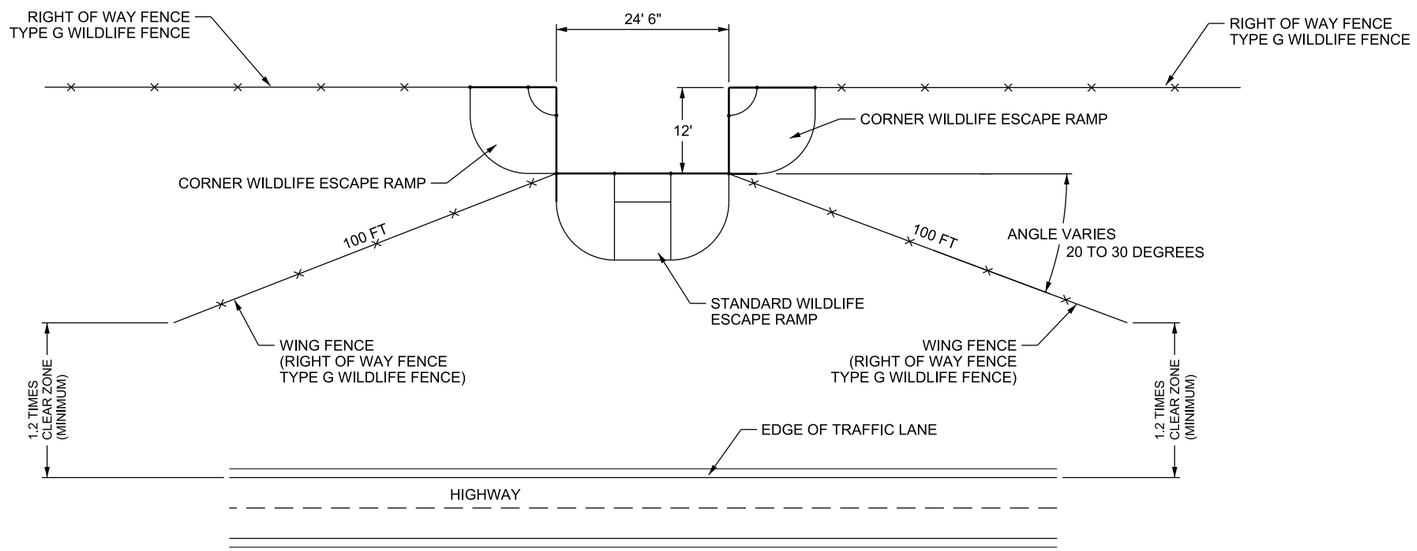

PLAN

NOTES:

1. MATCH POST TYPE OF WING FENCE (TYPE G WILDLIFE FENCE) IN COMBINATION WILDLIFE ESCAPE RAMP TO POST TYPE OF ADJACENT RIGHT OF WAY FENCE.
2. SEE STD DWG FG 1A, FG 1B, FG 2A, AND FG 2B FOR RIGHT OF WAY FENCE DETAILS.
3. SEE STD DWG FG 4A FOR STANDARD WILDLIFE ESCAPE RAMP DETAILS.
4. SEE STD DWG FG 4C FOR CORNER WILDLIFE ESCAPE RAMP DETAILS.

REVISIONS

NO.	DATE	APPR.	REMARKS

UTAH DEPARTMENT OF TRANSPORTATION
STANDARD DRAWINGS FOR ROAD AND BRIDGE CONSTRUCTION
SALT LAKE CITY, UTAH

RECOMMENDED FOR APPROVAL — JAN.01.2017 DATE
CHAIRMAN STANDARDS COMMITTEE APPROVED — JAN.01.2017 DATE
DEPUTY DIRECTOR

COMBINATION WILDLIFE ESCAPE RAMP DETAILS

STANDARD DRAWING TITLE

STD. DWG. NO.
FG 4B

28-NOV-2016 DGN File:L:\Standard Drawings\Imperial\2017 Approved\1-All Drawings\FG04B.dgn

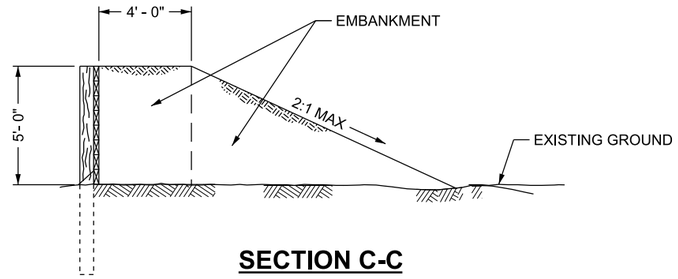

SECTION C-C

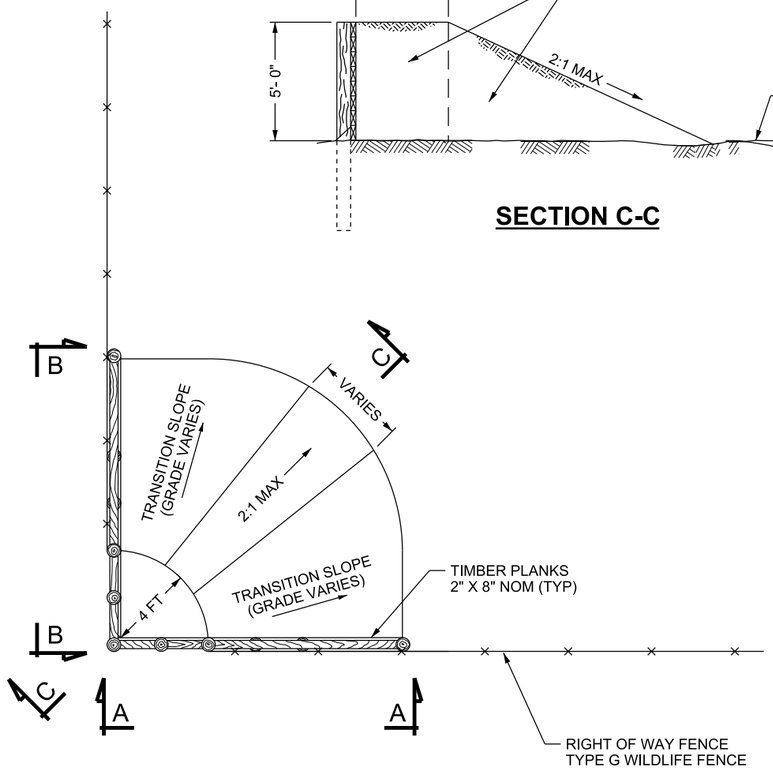

PLAN

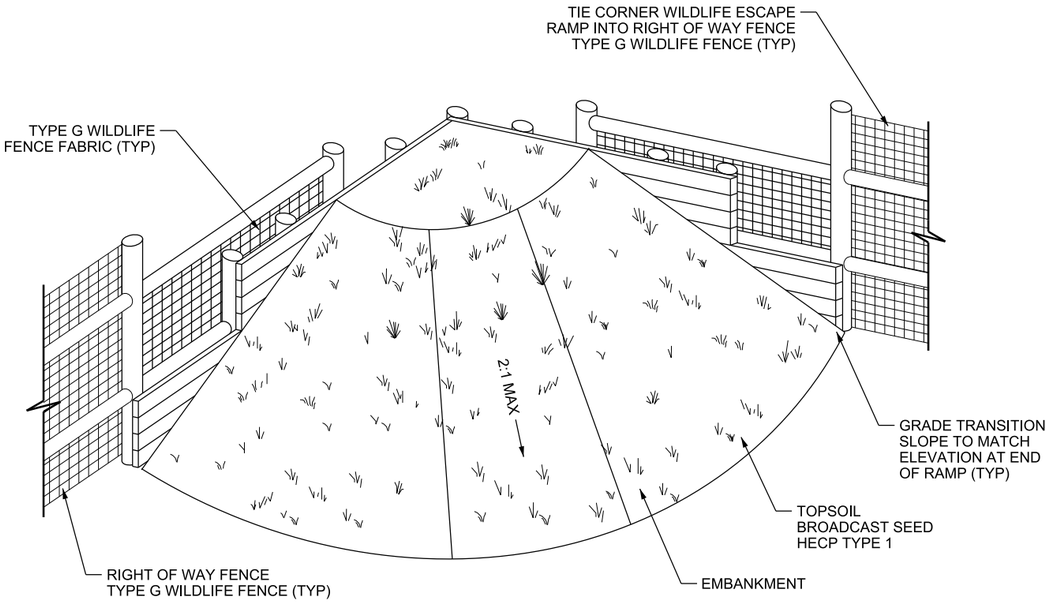

ISOMETRIC VIEW

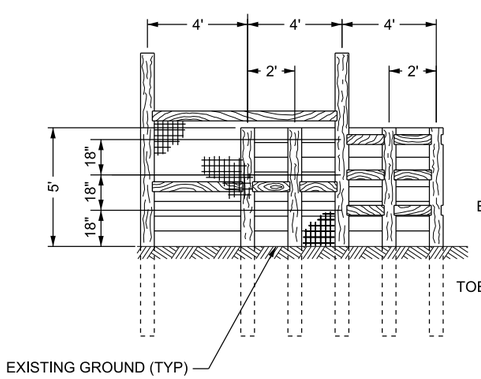

SECTION B-B

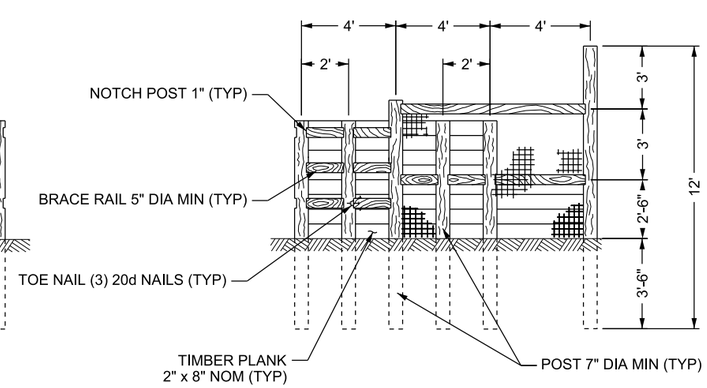

SECTION A-A

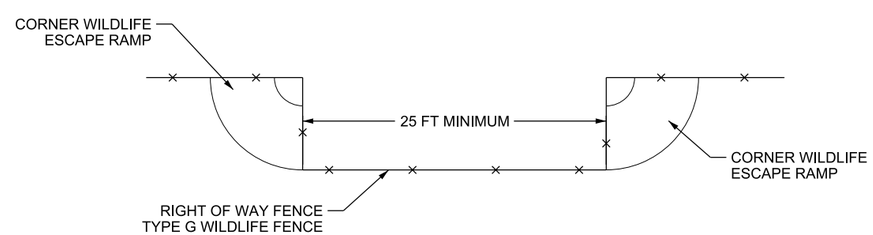

DUAL CORNER WILDLIFE ESCAPE RAMP

NOTES:

1. USE TIMBER PLANKS FOR ALL HORIZONTAL BACKING.
2. SEE STD DWG FG 4A FOR TIMBER PLANKS ANCHOR DETAIL.
3. SEE STD DWG FG 1A, FG 1B, FG 2A, AND FG 2B FOR RIGHT OF WAY FENCE DETAILS.
4. SECURE BRACE RAILS TO POSTS AT NOTCHED LOCATIONS BY DRIVING THREE 20d NAILS THROUGH THE RAILS AND INTO POSTS.

REVISIONS

NO.	DATE	APPR.	REMARKS

UTAH DEPARTMENT OF TRANSPORTATION
STANDARD DRAWINGS FOR ROAD AND BRIDGE CONSTRUCTION
SALT LAKE CITY, UTAH

RECOMMENDED FOR APPROVAL — JAN.01.2017 DATE
CHAIRMAN STANDARDS COMMITTEE APPROVED — JAN.01.2017 DATE
DEPUTY DIRECTOR

CORNER WILDLIFE ESCAPE RAMP DETAILS

STANDARD DRAWING TITLE

STD. DWG. NO.
FG 4C

DGN File:L:\Standard_Drawings\Imperial\2017 Approved\1-All Drawings\FG04C.dgn
28-NOV-2016

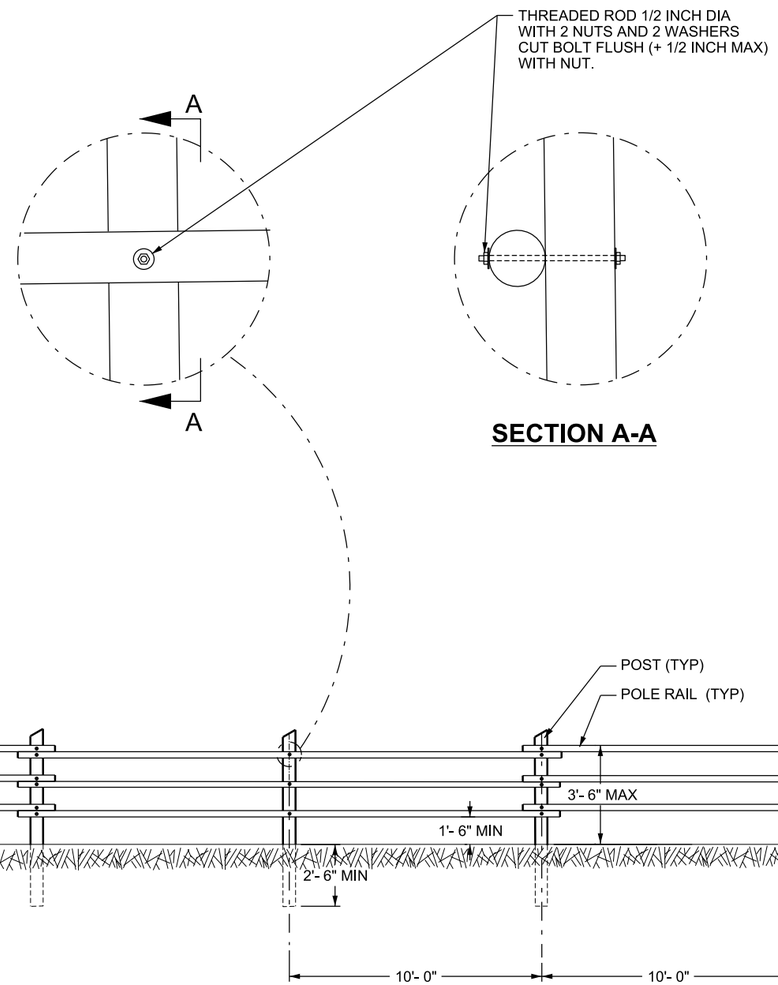

SECTION A-A

SECTION

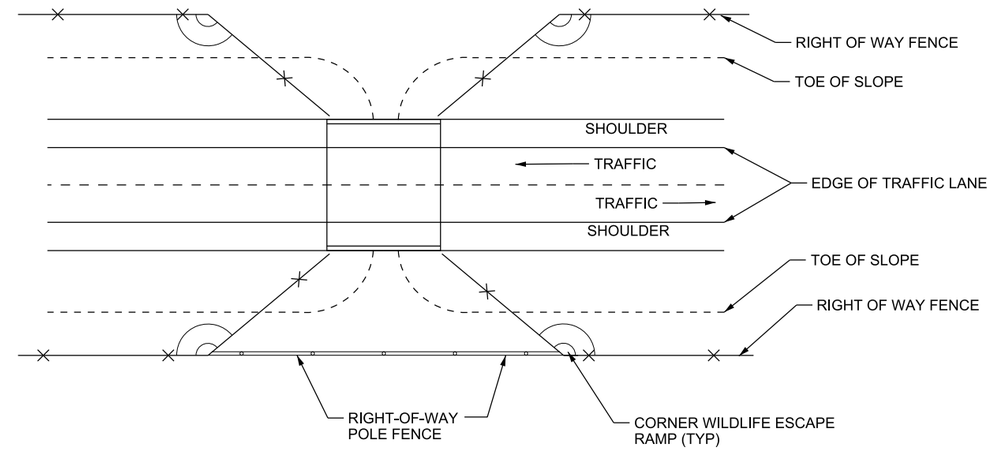

PLAN

1. RIGHT-OF-WAY POLE FENCE IS TO BE USED TO KEEP LIVESTOCK OUT OF CULVERT OR BRIDGE. THIS FENCE SHOULD ONLY BE USED IN COOPERATION WITH THE LAND OR LIVESTOCK OWNER.
2. CONNECT RAILS TO POSTS WITH 1/2 INCH DIAMETER THREADED ROD. DRILL A 5/8 INCH DIAMETER HOLE THROUGH POST AND POLE.
3. EXTEND HORIZONTAL RAIL A MAXIMUM OF 12 INCH PAST END POST.
4. ALTERNATE RAILS TO ALLOW OVERLAP FOR ATTACHMENT TO POSTS.
5. TOP RAIL SHOULD BE INSTALLED NO MORE THAN 3 1/2 FT ABOVE GROUND.
6. BOTTOM RAIL SHOULD BE INSTALLED AT LEAST 1 1/2 FT ABOVE GROUND.
7. MIDDLE RAIL TO BE INSTALLED EVENLY BETWEEN BOTTOM AND TOP RAIL.
8. SEE STD DWG FG 4C FOR CORNER WILDLIFE ESCAPE RAMP DETAILS.

REVISIONS

NO.	DATE	APPR.	REMARKS

UTAH DEPARTMENT OF TRANSPORTATION
STANDARD DRAWINGS FOR ROAD AND BRIDGE CONSTRUCTION
SALT LAKE CITY, UTAH

RECOMMENDED FOR APPROVAL — JAN.01.2017 DATE
CHAIRMAN STANDARDS COMMITTEE APPROVED — JAN.01.2017 DATE
DEPUTY DIRECTOR

STANDARD DRAWING TITLE
RIGHT OF WAY
POLE FENCE
DETAILS

STD. DWG. NO.
FG 4D

DGN File:L:\Standard Drawings\Imperial\2017 Approved\1-All Drawings\FG04D.dgn
28-NOV-2016

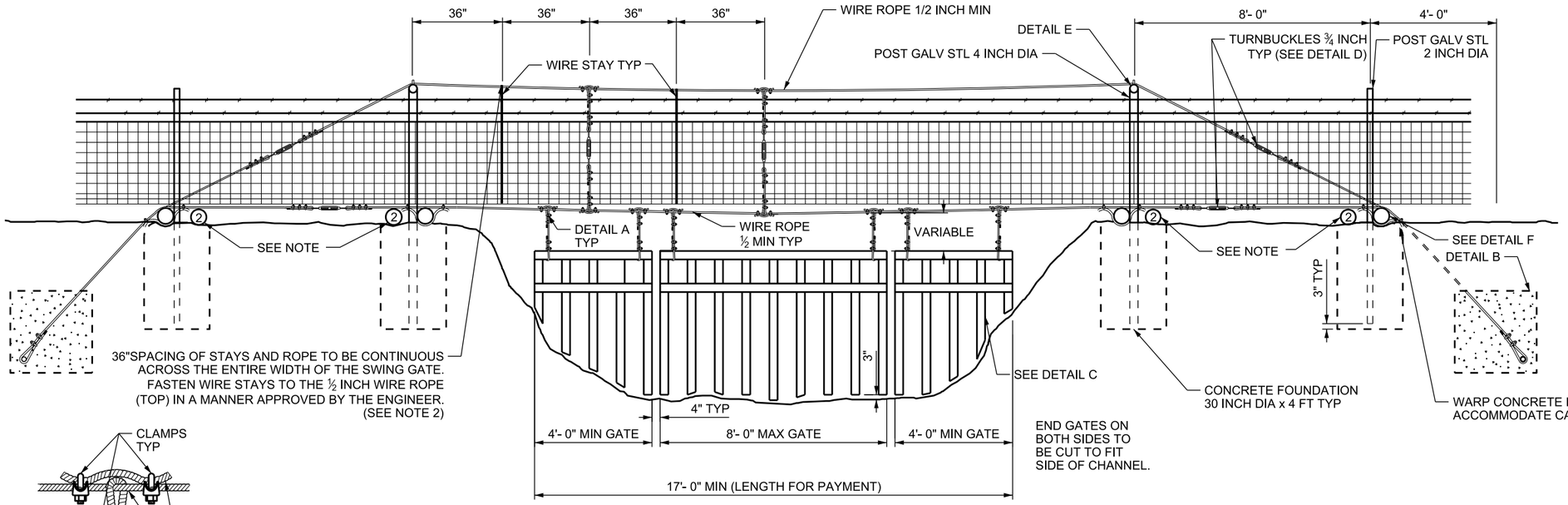

INSTALLATION DETAIL

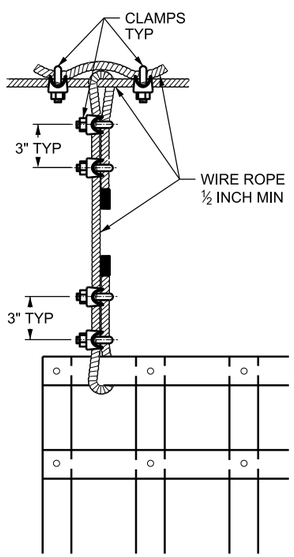

DETAIL A

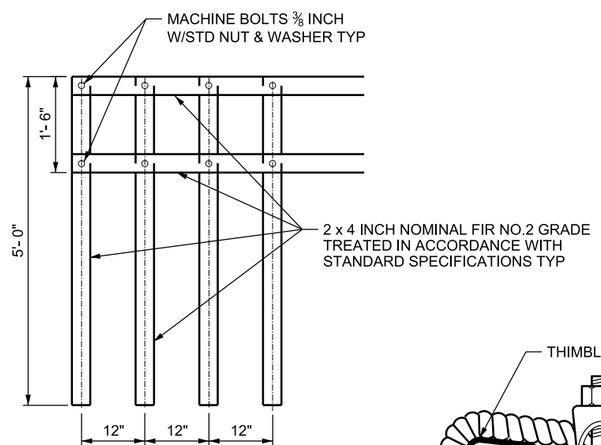

DETAIL C

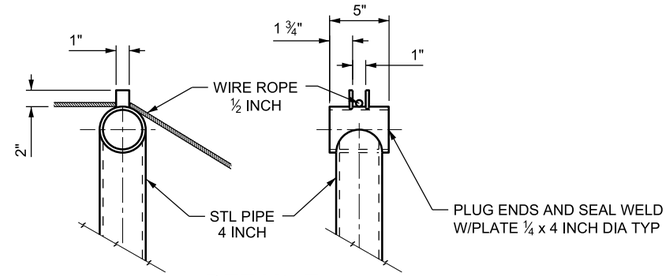

DETAIL E

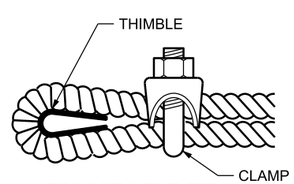

THIMBLE DETAIL

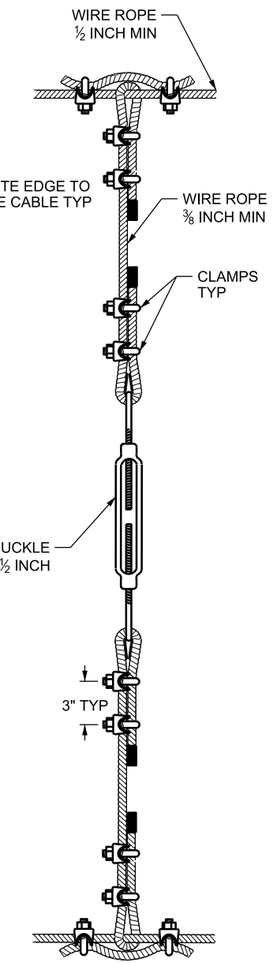

DETAIL G

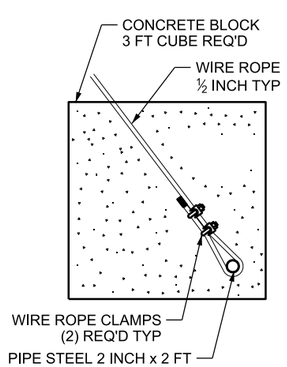

DETAIL B

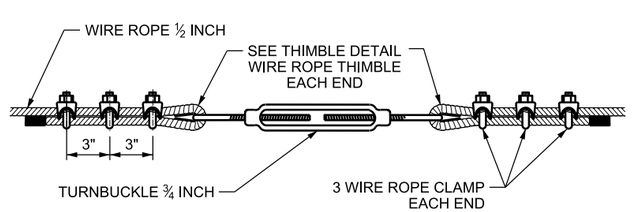

DETAIL D

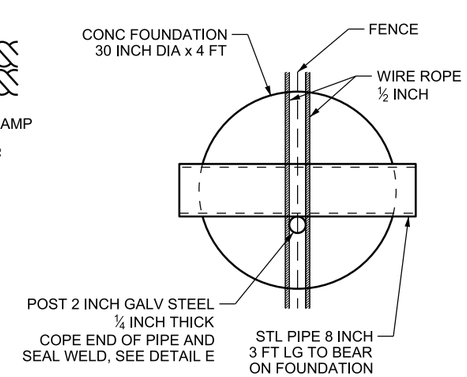

DETAIL F

NOTES:

1. INSTALL BEARING PIPES, CONCRETE BLOCKS AND TURN BUCKLES ON BOTH SIDES OF CHANNEL.
2. INSTALL WIRE ROPE ON THE UPSTREAM SIDE OF THE POSTS. USE ½ INCH DIA WIRE 6 x 12 INCH WITH A BREAKING STRENGTH OF 10,000 lb.

REVISIONS

NO.	DATE	APPR.	REMARKS

UTAH DEPARTMENT OF TRANSPORTATION
STANDARD DRAWINGS FOR ROAD AND BRIDGE CONSTRUCTION
SALT LAKE CITY, UTAH

RECOMMENDED FOR APPROVAL — JAN.01.2017 DATE
CHAIRMAN STANDARDS COMMITTEE APPROVED — JAN.01.2017 DATE
DEPUTY DIRECTOR

STANDARD DRAWING TITLE
SWING GATES TYPE II FOR GATES WIDER THAN 17 FT

STD. DWG. NO.
FG 5

DGN File: L:\Standard Drawings\Imperial\2017 Approved\1-All Drawings\FG05.dgn
28-NOV-2016

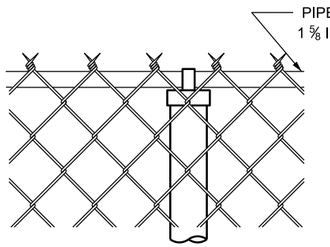

TWISTED & BARBED SELVAGE TYPE I

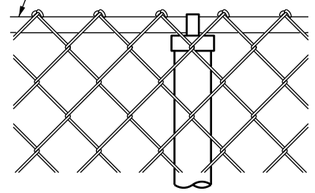

KNUCKLED SELVAGE TYPE II

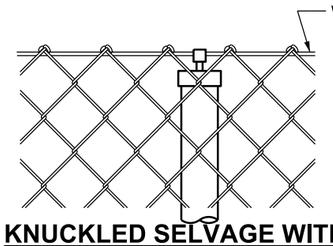

KNUCKLED SELVAGE WITH TENSION WIRE TYPE III

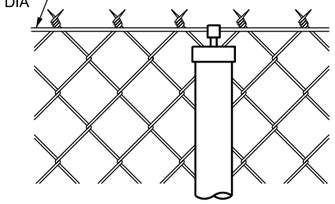

TWISTED & BARBED SELVAGE WITH TENSION WIRE TYPE IV

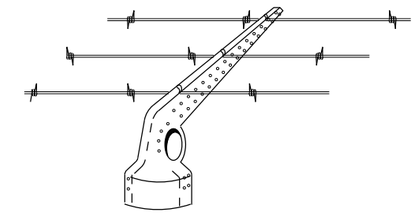

BARBED WIRE AND ARM

(WHEN REQUIRED)

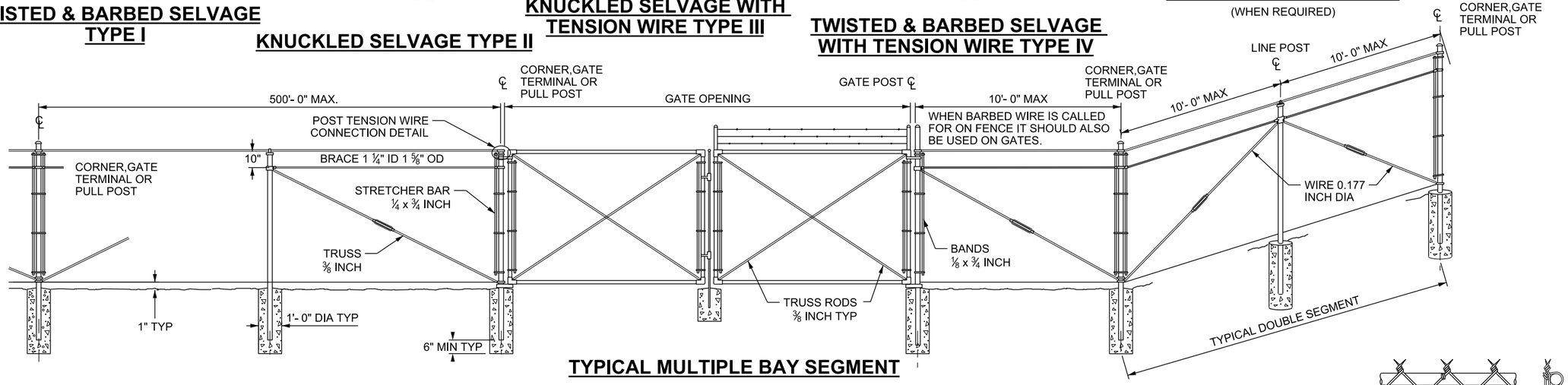

TYPICAL MULTIPLE BAY SEGMENT

HEIGHT	GATE OPENING	GATE POST	GATE FRAME
UNDER 6 FT	SINGLE TO 6 FT OR DOUBLE TO 12 FT	2"	1"
	SINGLE OVER 6 TO 8 FT OR DOUBLE OVER 12 TO 16 FT	2½"	1½""
	SINGLE OVER 8 TO 12 FT OR DOUBLE TO 16 TO 24 FT	3½"	
6 FT AND OVER *	SINGLE TO 6 FT OR DOUBLE TO 12 FT	2½"	1½"
	SINGLE 6 TO 13 FT OR DOUBLE OVER 12 TO 24 FT	3½"	
	SINGLE OVER 13 TO 18 FT OR DOUBLE OVER 24 TO 36 FT	6"	
	SINGLE OVER 18 FT OR DOUBLE OVER 36 FT	8"	

* GATES OVER 6 FT IN HEIGHT AND WIDER THAN 12 FT WILL REQUIRE (3) INDUSTRIAL PRESSED STEEL HINGES.

HEIGHT OF FABRIC	DEPTH OF POSTS	LENGTH OF END CORNER OR PULL POSTS	LENGTH OF LINE POSTS	SIZE OF POSTS									
				END, CORNER & PULL POSTS				LINE POST MIN.SIZE					
				NOM SIZE	OUTSIDE DIA	PIPE WEIGHT ASTM F 1083	PIPE WEIGHT TRIPLE COAT	NOM SIZE	OUTSIDE DIA.	PIPE WEIGHT ASTM F 1083	PIPE WEIGHT TRIPLE COAT	OUTSIDE DIMENSIONS C-SECTION	WT/FT
7 FT	3 FT	10 FT	9'- 8"	2 ½"	2.875"	5.80	4.64	2"	2.375"	3.65	3.11	1.875 x 1.625	2.40
6 FT	3 FT	9 FT	8'- 8"	2"	2.375"	3.65	3.11	1½"	1.900"	2.72	2.28	1.875 x 1.625	1.85
5 FT	3 FT	8 FT	7'- 8"	2"	2.375"	3.65	3.11	1½"	1.900"	2.72	2.23	1.875 x 1.625	1.85
4 FT	2 FT	6 FT	5'- 8"	2"	2.375"	3.65	3.11	1½"	1.900"	2.72	2.23	1.875 x 1.625	1.85
3 FT	2 FT	5 FT	4'- 8"	2"	2.375"	3.65	3.11	1½"	1.900"	2.72	2.23	1.875 x 1.625	1.85

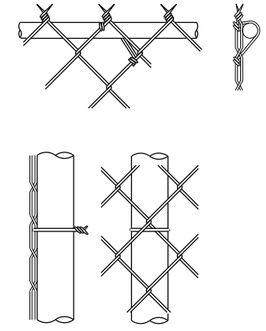

PIPE POST TIE

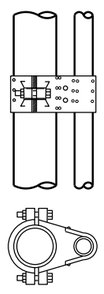

TOP GATE HINGE

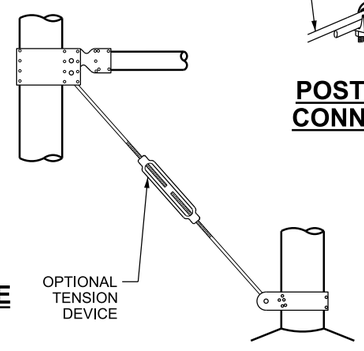

BRACE & TRUSS CONNECTIONS

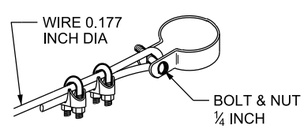

POST TENSION WIRE CONNECTION DETAIL

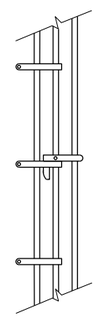

DROP ROD ASSY

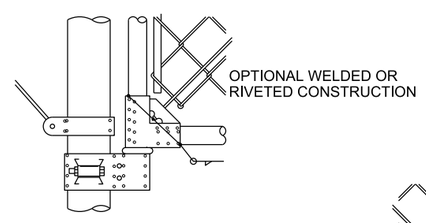

GATE HINGE DETAIL BOTTOM

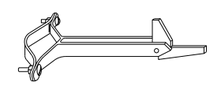

GATE HOLD BACK DETAIL

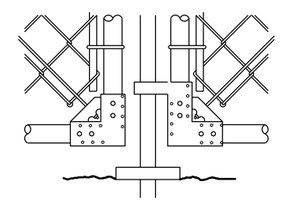

GATE STOP DETAIL

NOTES:

1. POSTS: SCHEDULE 40 PIPE. TRIPLE COATED HIGH TENSILE STEEL PIPE OR ROLL-FORMED C-SECTION OF THE SIZE SHOWN IN THE CHART AND AS DEFINED IN THE ASTM F 1043 GROUP II. WEIGHT IN lb/ft WITH TOLERANCE OF 10 PERCENT. OTHER TYPES OF POSTS WITH EQUAL OR GREATER SECTION MODULUS MAY BE USED IF APPROVED BY THE ENGINEER.
2. FABRIC HEIGHTS LESS THAN 5 FT. TRUSS RODS AND BRACES NOT REQUIRED.
3. USE TRIPLE COATED HIGH TENSILE STEEL PIPE CONFORMING TO ASTM F 1043 GROUP IC.

REVISIONS

NO.	DATE	APPR.	REMARKS

UTAH DEPARTMENT OF TRANSPORTATION
STANDARD DRAWINGS FOR ROAD AND BRIDGE CONSTRUCTION
SALT LAKE CITY, UTAH

RECOMMENDED FOR APPROVAL — JAN.01, 2017 DATE
CHAIRMAN STANDARDS COMMITTEE APPROVED — JAN.01, 2017 DATE
DEPUTY DIRECTOR

STANDARD DRAWING TITLE: CHAIN LINK FENCE

STD. DWG. NO. FG 6

DGN File:L:\Standard Drawings\Imperial\2017 Approved\1-All Drawings\FG06.dgn
28-NOV-2016

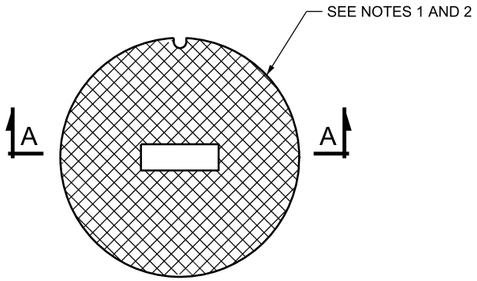

SOLID

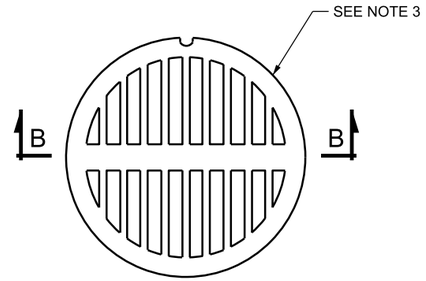

GRATED

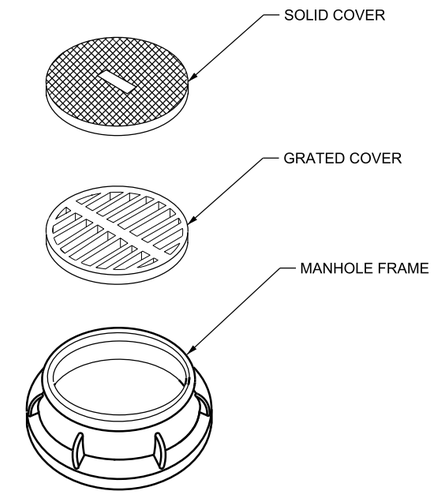

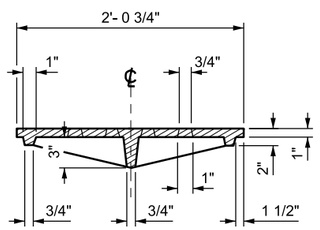

SECTION A-A

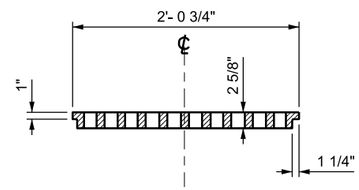

SECTION B-B

MANHOLE COVER

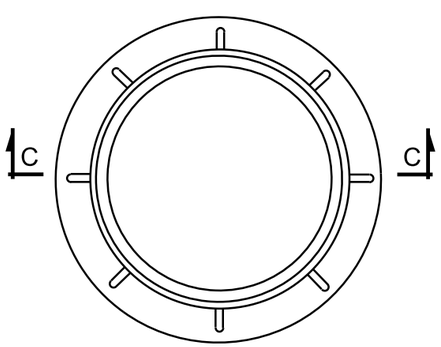

FRAME PLAN

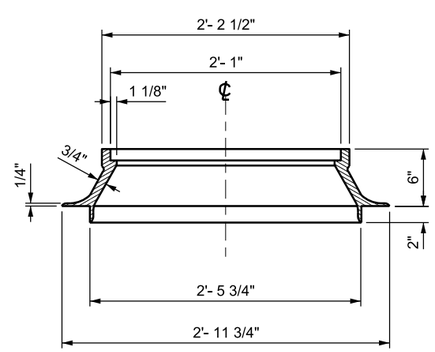

SECTION C-C

NOTES

1. FURNISH MANHOLE COVER AND FRAME IN EITHER GREY IRON OR DUCTILE IRON.
2. CAST A NON-SLIP AND NON-TRIP SURFACE INTO THE SOLID COVER.
3. CAST THE TYPE OF UTILITY INTO THE SOLID COVER ("STORM DRAIN", "SEWER", "WATER", FOR EXAMPLE)
4. DIMENSIONS OF THE GRATE OPENINGS MAY VARY DUE TO DIFFERENT MANUFACTURER'S CONFIGURATIONS.
5. ESTIMATED WEIGHT OF SOLID COVER AND FRAME 402 LB.
6. ESTIMATED WEIGHT OF GRATED COVER AND FRAME 385 LB.

REVISIONS

NO.	DATE	APPR.	REMARKS

UTAH DEPARTMENT OF TRANSPORTATION
STANDARD DRAWINGS FOR ROAD AND BRIDGE CONSTRUCTION
SALT LAKE CITY, UTAH

RECOMMENDED FOR APPROVAL — JAN.01.2017 DATE
CHAIRMAN STANDARDS COMMITTEE APPROVED — JAN.01.2017 DATE
DEPUTY DIRECTOR

MANHOLE COVER AND FRAME

STANDARD DRAWING TITLE

STD. DWG. NO.
GF 1

DGN File:L:\Standard Drawings\Imperial\2017 Approved\1-All Drawings\GF01.dgn
28-NOV-2016

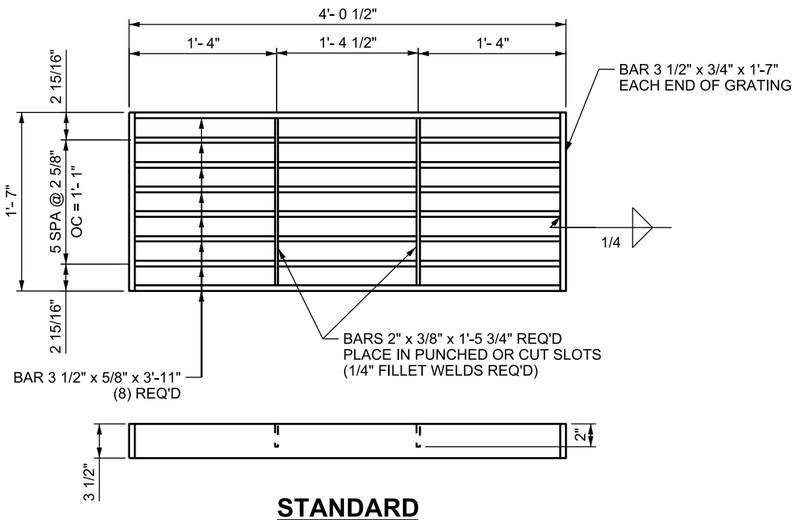

STANDARD

WEIGHT: 272 LB
OPEN AREA: 4.48 FT^2

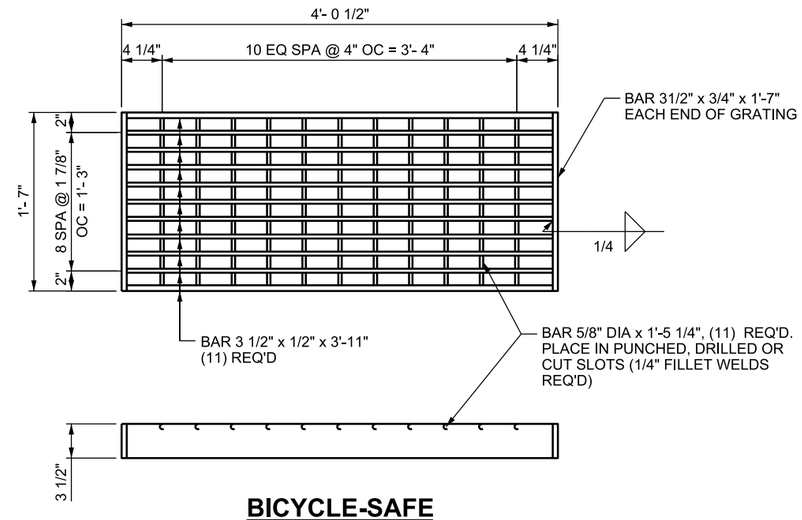

BICYCLE-SAFE

WEIGHT: 297 LB
OPEN AREA: 3.54 FT^2

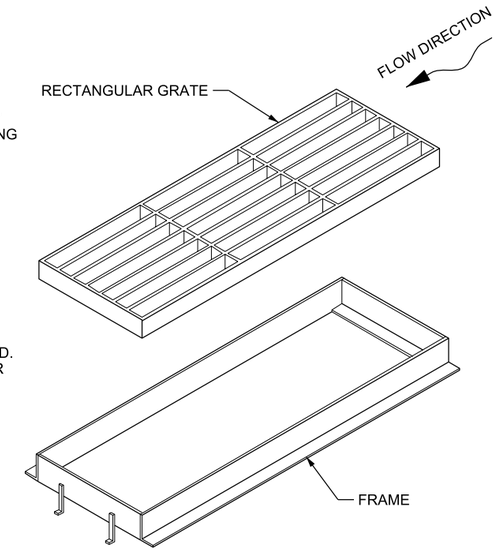

RECTANGULAR GRATE

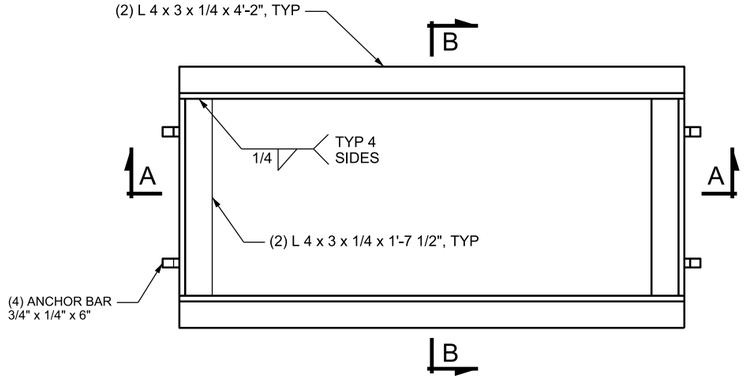

PLAN

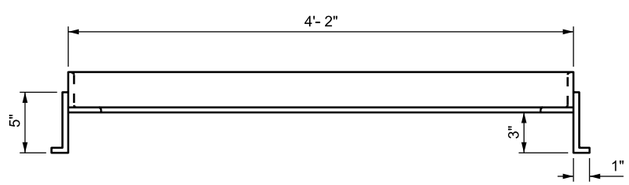

SECTION A-A

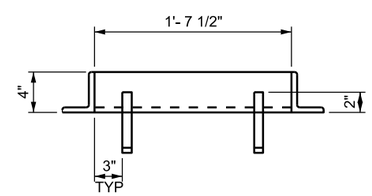

SECTION B-B

FRAME

WEIGHT: 68 LB

DESIGN DATA

HL-93 LOADING IN ACCORDANCE WITH AASHTO LRFD BRIDGE DESIGN AND INTERIM SPECIFICATIONS.

STRUCTURAL STEEL: Fy = 36,000 psi

NOTES

1. FURNISH RECTANGULAR GRATE AND FRAME IN STRUCTURAL STEEL.
2. WELD ALL JOINTS WITH A 1/4 INCH FILLET WELD UNLESS NOTED OTHERWISE.

REVISIONS

NO.	DATE	APPR.	REMARKS

UTAH DEPARTMENT OF TRANSPORTATION
STANDARD DRAWINGS FOR ROAD AND BRIDGE CONSTRUCTION
SALT LAKE CITY, UTAH

RECOMMENDED FOR APPROVAL — JAN.01.2017 DATE
CHAIRMAN STANDARDS COMMITTEE APPROVED — JAN.01.2017 DATE
DEPUTY DIRECTOR

RECTANGULAR GRATE AND FRAME
STANDARD DRAWING TITLE

STD. DWG. NO.
GF 3

DGN File: L:\Standard Drawings\Imperial\2017 Approved\1-All Drawings\GF03.dgn
28-NOV-2016

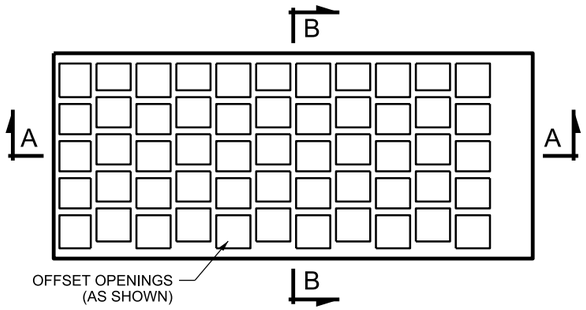

RECTANGULAR DIRECTIONAL FLOW GRATE

WEIGHT: 266 LB

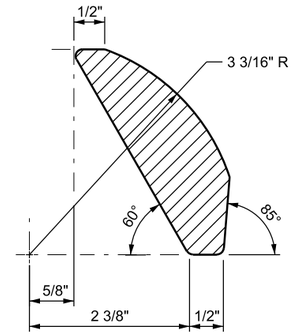

DETAIL A

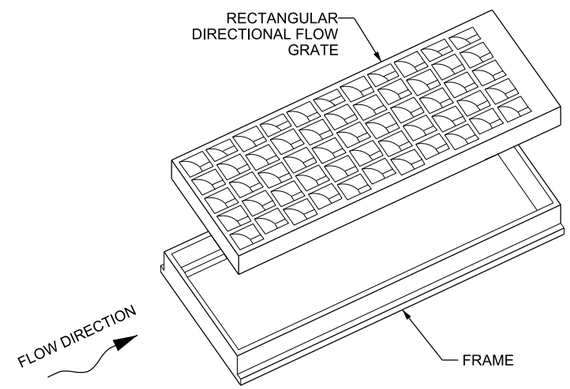

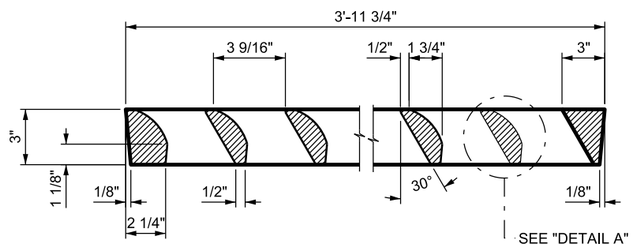

SECTION A-A

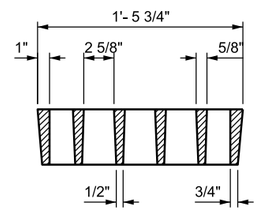

SECTION B-B

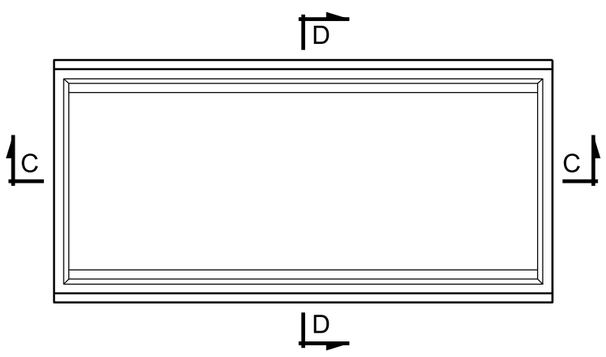

FRAME

WEIGHT: 160 LB

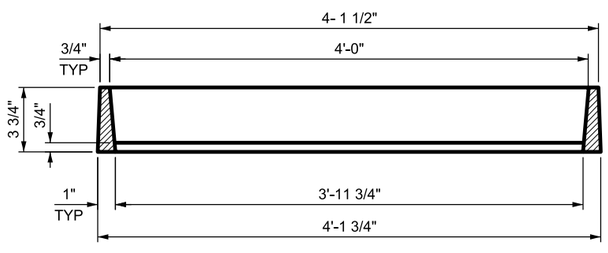

SECTION C-C

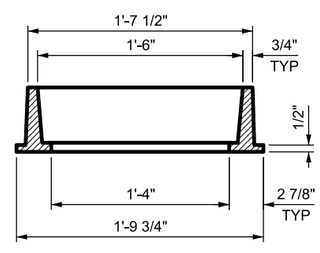

SECTION D-D

NOTES

1. FURNISH RECTANGULAR DIRECTIONAL FLOW GRATE AND FRAME IN EITHER GREY IRON OR DUCTILE IRON.
2. INSTALLATION REQUIRES SUPPORT UNDER LONGITUDINAL AXIS OF FRAME.

REVISIONS

NO.	DATE	APPR.	REMARKS

UTAH DEPARTMENT OF TRANSPORTATION
STANDARD DRAWINGS FOR ROAD AND BRIDGE CONSTRUCTION
SALT LAKE CITY, UTAH

RECOMMENDED FOR APPROVAL — JAN.01, 2017 DATE
CHAIRMAN STANDARDS COMMITTEE APPROVED — JAN.01, 2017 DATE
DEPUTY DIRECTOR

RECTANGULAR DIRECTIONAL FLOW GRATE AND FRAME

STANDARD DRAWING TITLE

STD. DWG. NO.
GF 4

DGN Files:L:\Standard_Drawings\Imperial\2017 Approved\1-All Drawings\GF04.dgn
28-NOV-2016

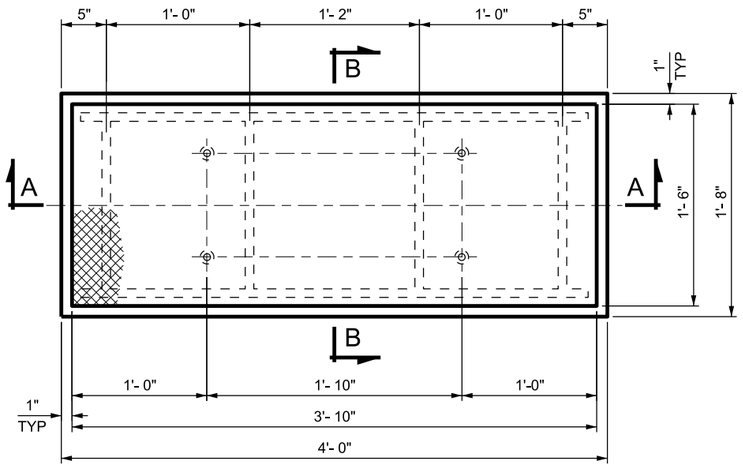

RECTANGULAR SOLID COVER

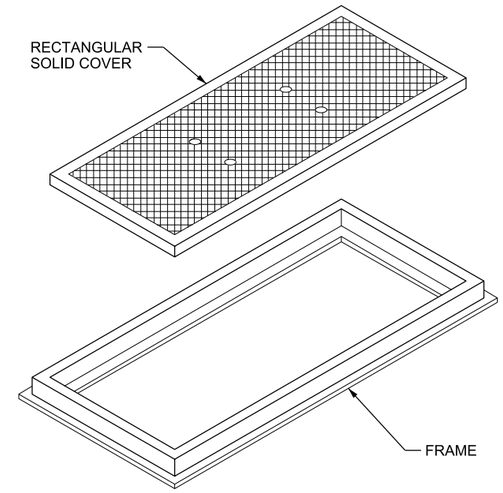

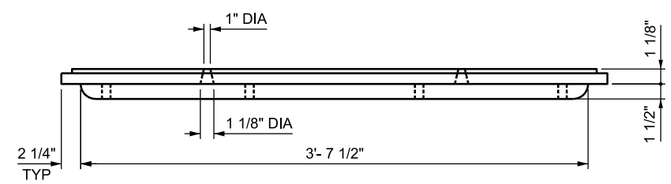

SECTION A-A

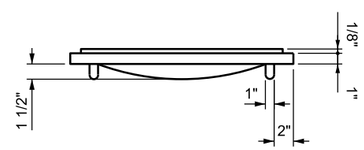

SECTION B-B

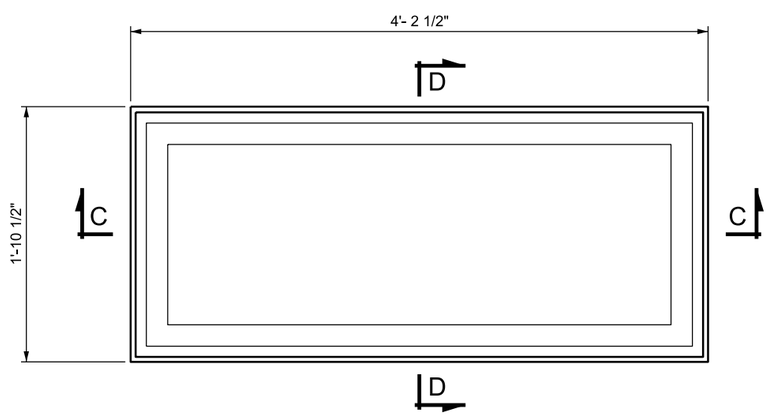

FRAME

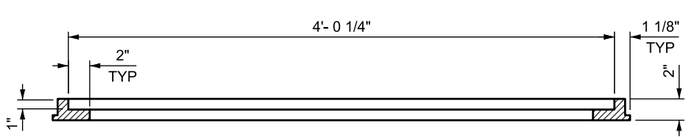

SECTION C-C

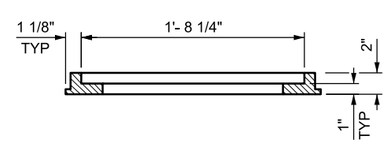

SECTION D-D

NOTES

1. FURNISH RECTANGULAR SOLID COVER AND FRAME IN EITHER GREY IRON OR DUCTILE IRON.
2. INSTALLATION REQUIRES SUPPORT UNDER LONGITUDINAL AXIS OF FRAME.

REVISIONS

NO.	DATE	APPR.	REMARKS

UTAH DEPARTMENT OF TRANSPORTATION
STANDARD DRAWINGS FOR ROAD AND BRIDGE CONSTRUCTION
SALT LAKE CITY, UTAH

RECOMMENDED FOR APPROVAL — JAN.01.2017 DATE
CHAIRMAN STANDARDS COMMITTEE APPROVED — JAN.01.2017 DATE
DEPUTY DIRECTOR

RECTANGULAR SOLID COVER AND FRAME

STANDARD DRAWING TITLE

STD. DWG. NO.
GF 5

DGN File: L:\Standard Drawings\Imperial\2017 Approved\1-All Drawings\GF05.dgn
28-NOV-2016

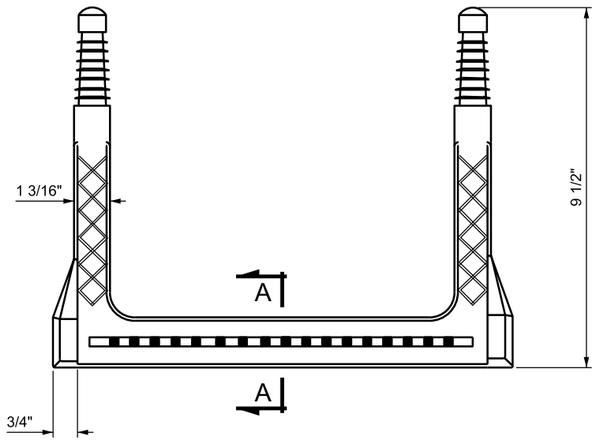

PLAN

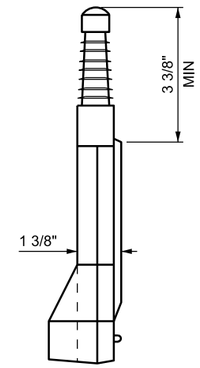

RIGHT SIDE VIEW

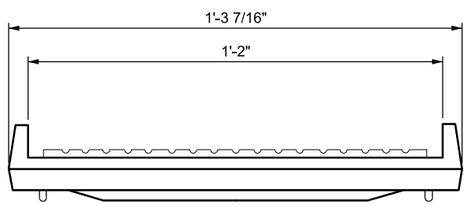

END VIEW

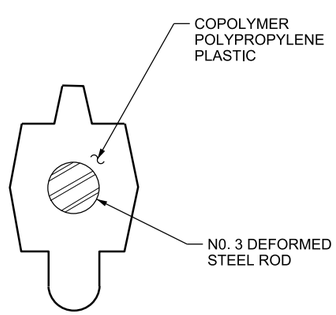

SECTION A-A

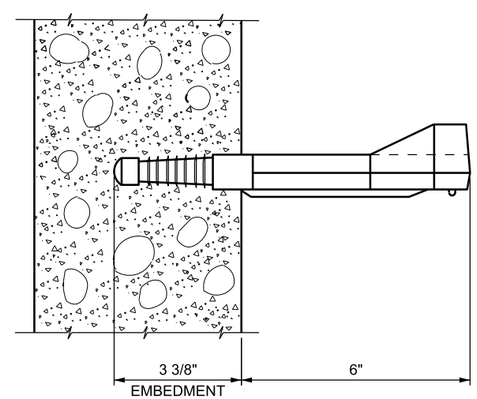

EMBEDMENT DETAIL

NOTES

1. VERTICALLY ALIGN AND UNIFORMLY SPACE STEPS WITH A MINIMUM SPACING OF 12 INCHES AND A MAXIMUM SPACING OF 16 INCHES UNLESS SHOWN OTHERWISE.

REVISIONS

NO.	DATE	APPR.	REMARKS

UTAH DEPARTMENT OF TRANSPORTATION
STANDARD DRAWINGS FOR ROAD AND BRIDGE CONSTRUCTION
SALT LAKE CITY, UTAH

RECOMMENDED FOR APPROVAL — JAN.01.2017 DATE
CHAIRMAN STANDARDS COMMITTEE APPROVED — JAN.01.2017 DATE
DEPUTY DIRECTOR

MANHOLE STEPS
STANDARD DRAWING TITLE

STD. DWG. NO.
GF 6

DGN File:L:\Standard Drawings\Imperial\2017 Approved\1-All Drawings\GF06.dgn
28-NOV-2016

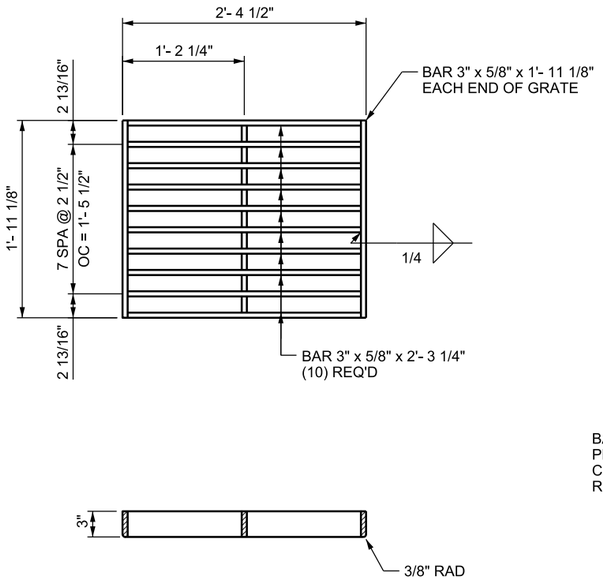

STANDARD

WEIGHT: 179 LB
OPEN AREA: 3.10 FT^2

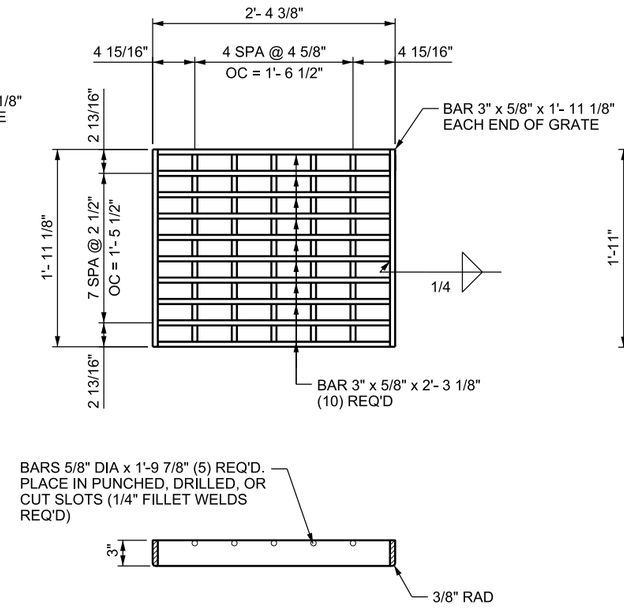

BICYCLE-SAFE

WEIGHT: 179 LB
OPEN AREA: 2.73 FT^2

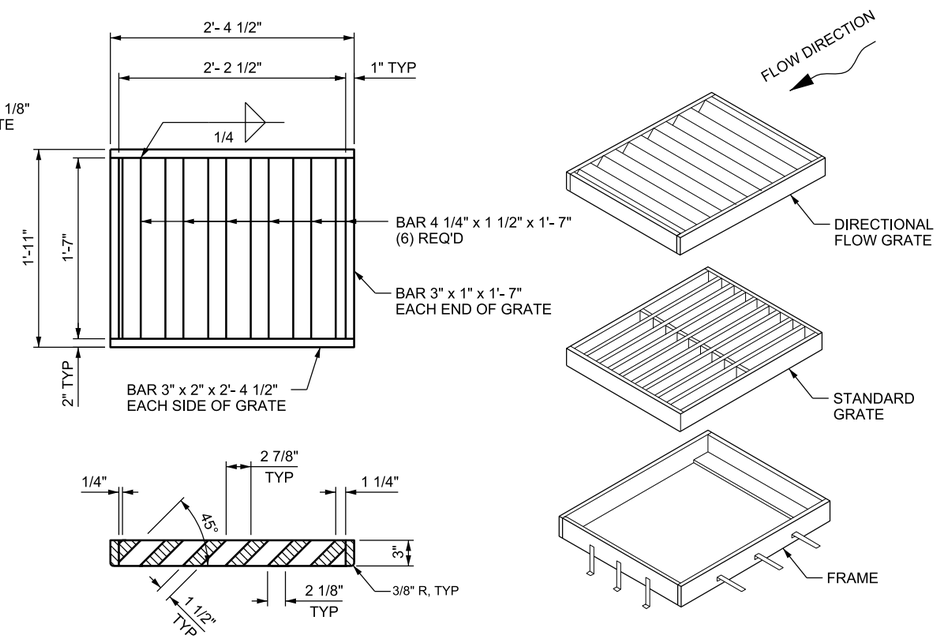

DIRECTIONAL FLOW

WEIGHT: 314 LB

2 FT X 2 FT GRATE

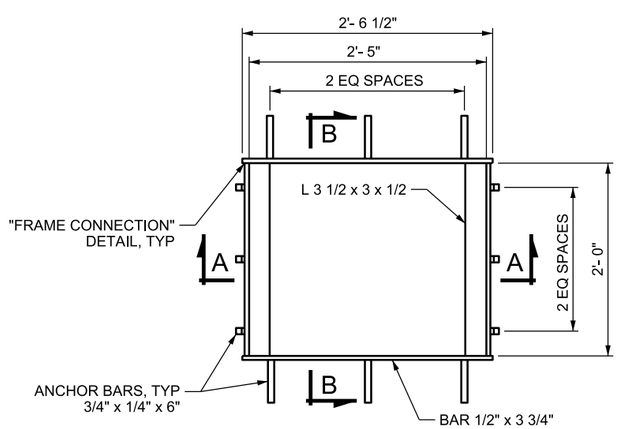

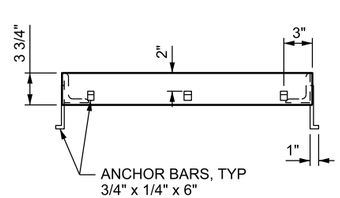

SECTION A-A

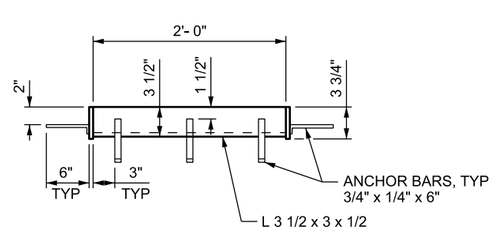

SECTION B-B

FRAME

77 LB

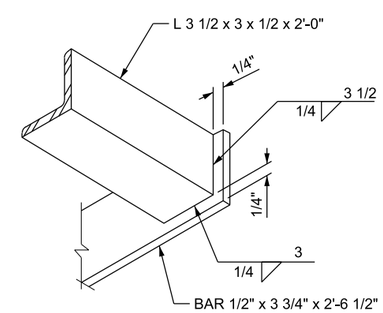

FRAME CONNECTION

DESIGN DATA

HL-93 IN ACCORDANCE WITH AASHTO LRFD BRIDGE DESIGN AND INTERIM SPECIFICATIONS

STRUCTURAL STEEL: Fy = 36,000 psi

NOTES

1. FURNISH RECTANGULAR GRATE AND FRAME IN STRUCTURAL STEEL.
2. WELD ALL JOINTS WITH A 1/4 INCH FILLET WELD UNLESS NOTED OTHERWISE.

REVISIONS

NO.	DATE	APPR.	REMARKS

UTAH DEPARTMENT OF TRANSPORTATION
STANDARD DRAWINGS FOR ROAD AND BRIDGE CONSTRUCTION
SALT LAKE CITY, UTAH

RECOMMENDED FOR APPROVAL — JAN.01, 2017 DATE
CHAIRMAN STANDARDS COMMITTEE APPROVED — JAN.01, 2017 DATE
DEPUTY DIRECTOR

STANDARD DRAWING TITLE
2 FT x 2 FT
GRATE AND FRAME

STD. DWG. NO.
GF 8

DGN File: L:\Standard Drawings\Imperial\2017 Approved\1-All Drawings\GF08.dgn
28-NOV-2016

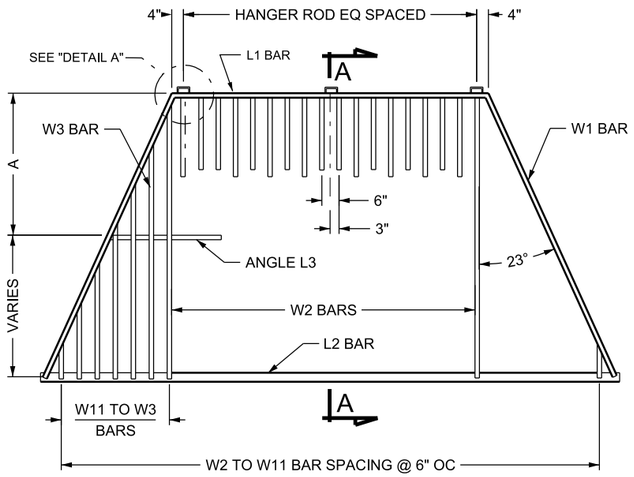

STEEL GRATING

SEE STD DWG GF 11 & GF 12 FOR LINES 1 THRU 48

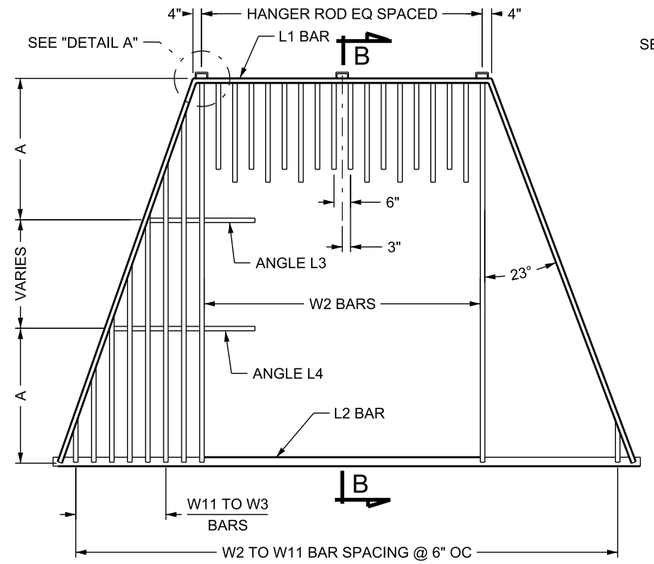

STEEL GRATING

SEE STD DWG GF 12 FOR LINES 48 THRU 90

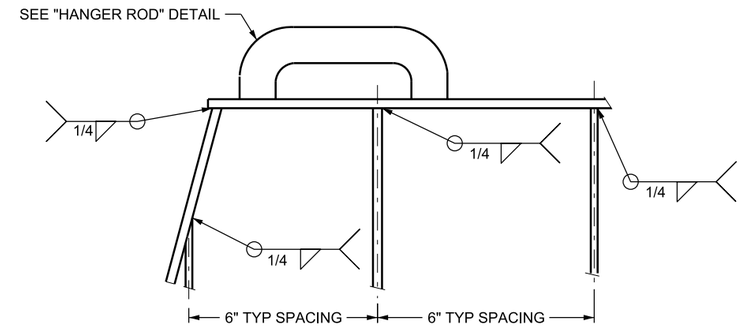

DETAIL A

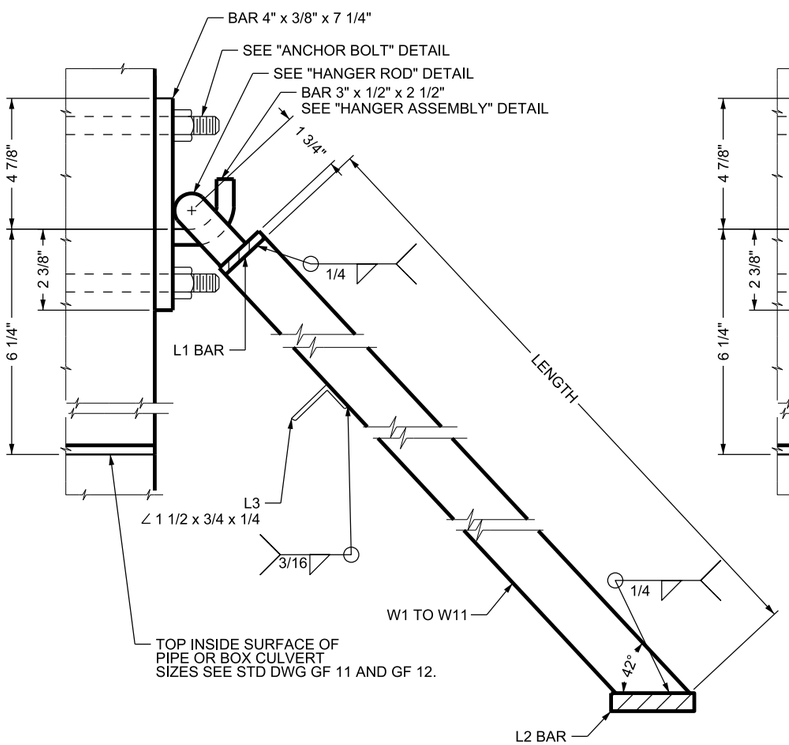

SECTION A-A

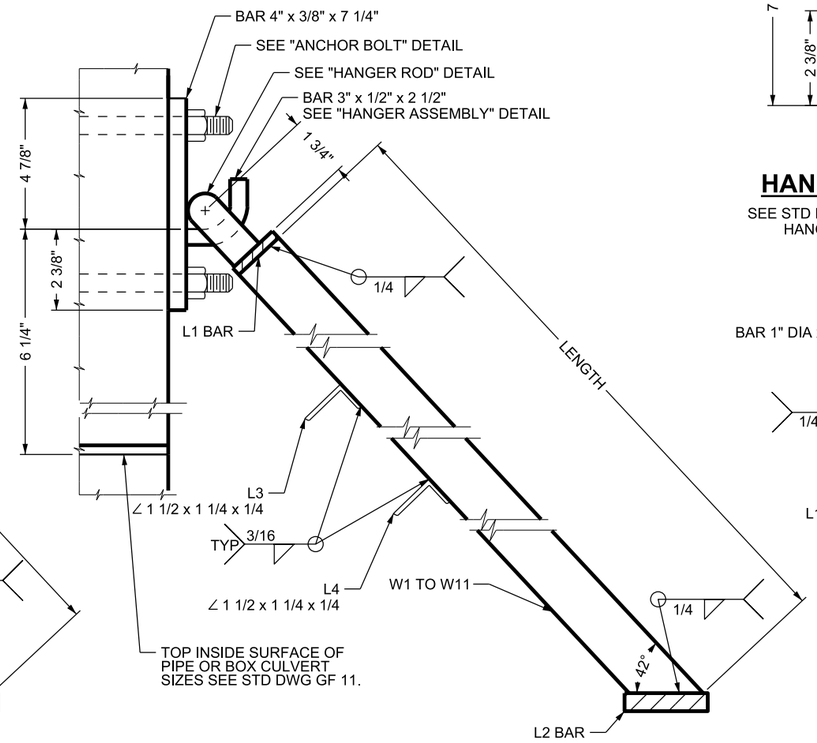

SECTION B-B

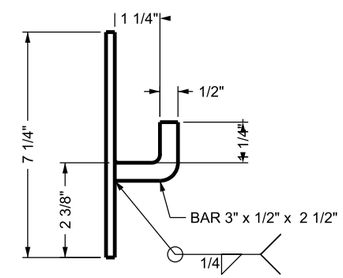

HANGER ASSEMBLY

SEE STD DWG GF 11 FOR "ALTERNATE HANGER ASSEMBLY" DETAIL

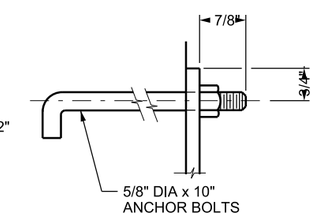

ANCHOR BOLT

TWO ANCHOR BOLTS PER HANGER
(WEIGHT FOR BOLT & NUT 0.97 LB)

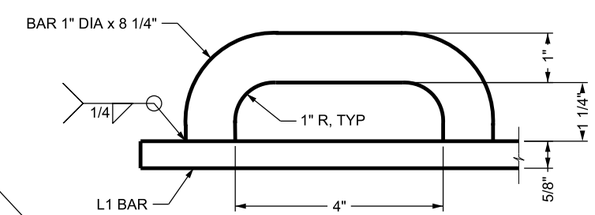

HANGER ROD

SEE STD DWG GF 11 FOR "ALTERNATE HANGER ROD" DETAIL
(WEIGHT OF HANGER RODS 1.84 LB EACH)

DESIGN DATA

STRUCTURAL STEEL: Fy = 36,000 psi

NO.	DATE	APPR.	REMARKS

REVISIONS

UTAH DEPARTMENT OF TRANSPORTATION
STANDARD DRAWINGS FOR ROAD AND BRIDGE CONSTRUCTION
SALT LAKE CITY, UTAH

RECOMMENDED FOR APPROVAL — JAN.01.2017 DATE
CHAIRMAN STANDARDS COMMITTEE APPROVED — JAN.01.2017 DATE
DEPUTY DIRECTOR

STANDARD DRAWING TITLE
STANDARD TRASH RACKS
90 DEGREE CROSSING
ANGLE

STD. DWG. NO.
GF 10

DGN File: L:\Standard Drawings\Imperial\2017 Approved\1-All Drawings\GF10.dgn
28-NOV-2016

LINE	TO BE USED FOR (NOM.SIZE) BOX CULVERTS	CORRUGATED METAL PIPES	CORRUGATED PIPE ARCHES	CONCRETE PIPE	MULTI-PLATE ELLIPSES	MULTI-PLATE PIPE ARCHES	A	TRANSVERSE BARS 1- EACH REQUIRED L1 LENGTH	L1 THICK	L1 WIDTH	L2 LENGTH	L2 THICK	L2 WIDTH	L3 LENGTH	L4 LENGTH	MAIN BARS 2- EACH W1 LENGTH	W2 LENGTH	NO	2-EACH REQUIRED W3 LENGTH	W4 LENGTH	W5 LENGTH	W6 LENGTH	W7 LENGTH	W8 LENGTH	W9 LENGTH	W10 LENGTH	W11 LENGTH	W1 TO W11 THICK	W1 TO W11 WIDTH	NO. OF HANGER ASSEMBLY AND HANGER ROD	WEIGHT OF STRUCT STL LB
1		18"	29" x 18"	18"			1'- 5"	1'- 5"	¼"	1 ¼"	3'- 11 ¾"	½"	1 ⅝"	2'- 8"	0	3'- 2 ¾"	2'- 11 ⅝"	2	2'- 10 ⅛"	1'- 8 ⅛"	0'- 6 ⅛"							¼"	1 ¼"	2	55.8
2							1'- 5"	2'- 4"			4'- 10 ⅝"			3'- 7"		3'- 2 ¾"	2'- 11 ⅝"	4	2'- 9"	1'- 7"	0'- 5"										67.5
3		21"		21"			1'- 7"	1'- 8"			4'- 6 ½"			3'- 1"		3'- 7 ⅛"	3'- 4 ⅛"	4	2'- 4 ¼"	1'- 2 ¼"											64.5
4		24"		24"			1'- 10"	1'- 11"			5'- 1 ¼"			3'- 6"		4'- 0 ⅛"	3'- 8 ⅝"	4	3'- 0 ¼"	1'- 10 ¼"	0'- 8 ¼"										74.5
5			36" x 22"				1'- 10"	2'- 11"			5'- 10 ¾"			4'- 6"		3'- 9 ¼"	3'- 5 ⅜"	6	2'- 9 ¼"	1'- 7 ¼"	0'- 5 ¼"										84.4
6				27"			2'- 0"	2'- 2"			5'- 8 ⅛"			3'- 11"		4'- 5 ½"	4'- 1 ⅛"	4	3'- 8 ¼"	2'- 6 ¼"	1'- 4 ¼"										84.4
7			43" x 27"				2'- 0"	3'- 6"			7'- 0 ⅛"			5'- 3"		4'- 5 ½"	4'- 1 ⅛"	6	4'- 0 ⅛"	2'- 10 ⅞"	1'- 8 ⅛"	0'- 6 ⅛"									105.7
8			50" x 31"				2'- 3"	4'- 1"			8'- 0 ⅜"			6'- 0"		5'- 0"	4'- 7 ¼"	8	4'- 1"	2'- 11"	1'- 9"	0'- 7"									125.9
9	24" x 24"						1'- 10"	1'- 11"			5'- 1 ⅜"			3'- 6"		4'- 0 ⅛"	3'- 8 ⅜"	4	3'- 0 ¼"	1'- 10 ¼"	0'- 8 ¼"										74.5
10		30"		30"			2'- 2"	2'- 5"			6'- 3"			4'- 4"		4'- 10 ⅜"	4'- 5 ⅜"	4	4'- 4 ¼"	3'- 2 ¼"	2'- 0 ¼"	0'- 10 ¼"									96.2
11	36" x 24"						1'- 10"	2'- 11"			6'- 1 ⅜"			4'- 6"		4'- 0 ½"	3'- 8 ⅜"	6	3'- 0 ¼"	1'- 10 ¼"	0'- 8 ¼"										89.0
12	48" x 24"						1'- 10"	3'- 11"			7'- 1 ⅜"			5'- 6"		4'- 0 ½"	3'- 8 ⅜"	8	3'- 0 ¼"	1'- 10 ¼"	0'- 8 ¼"										103.6
13	60" x 24"						1'- 10"	4'- 11"			8'- 1 ⅜"			6'- 6"		4'- 0 ½"	3'- 8 ⅜"	10	3'- 0 ¼"	1'- 10 ¼"	0'- 8 ¼"										118.1
14	72" x 24"						1'- 10"	5'- 11"			9'- 1 ⅜"			7'- 6"		4'- 0 ½"	3'- 8 ⅜"	12	3'- 0 ¼"	1'- 10 ¼"	0'- 8 ¼"									2	132.7
15	84" x 24"						1'- 10"	6'- 11"			10'- 1 ⅜"			8'- 6"		4'- 0 ½"	3'- 8 ⅜"	14	3'- 0 ¼"	1'- 10 ¼"	0'- 8 ¼"									3	153.1
16	96" x 24"						1'- 10"	7'- 11"			11'- 1 ¾"			9'- 6"		4'- 0 ½"	3'- 8 ⅜"	16	3'- 0 ¼"	1'- 10 ¼"	0'- 8 ¼"									3	167.6
17				33"			2'- 5"	2'- 8"	¼"		6'- 9 ⅛"			4'- 9"		5'- 3 ¼"	4'- 10 ⅛"	6	3'- 10 ¼"	2'- 8 ¼"	1'- 6 ¼"									3	113.0
18		36"		36"			2'- 7"	2'- 11"	⅜"		7'- 4 ½"			5'- 2"		5'- 7 ⅞"	5'- 2 ⅜"	6	4'- 5 ⅞"	3'- 3 ⅛"	2'- 1 ⅞"	0'- 11 ⅛"									2	121.4
19			58" x 36"				2'- 7"	4'- 9"			9'- 2 ½"			7'- 0"		5'- 7 ⅞"	5'- 2 ⅜"	10	4'- 3 ⅝"	3'- 1 ⅜"	1'- 11 ⅝"	0'- 9 ⅛"									155.4
20	36" x 36"						2'- 7"	2'- 11"			7'- 4 ½"			5'- 2"		5'- 7 ⅞"	5'- 6 ½"	6	4'- 5 ⅞"	3'- 3 ½"	2'- 1 ⅞"	0'- 11 ⅛"									121.4
21				39"			2'- 9"	3'- 2"			7'- 11 ⅜"			5'- 7"		6'- 0 ¾"	5'- 11 ⅜"	6	5'- 2"	4'- 0"	2'- 10"	1'- 8"	0'-6"								135.0
22		42"		42"			2'- 11"	3'- 5"			8'- 6 ¼"			5'- 11"		6'- 5 ½"	5'- 2 ⅜"	6	5'- 9 ⅞"	4'- 7 ½"	3'- 5 ⅝"	2'- 3 ½"	1'-1 ⅛"									148.5
23	48" x 36"						2'- 7"	3'- 11"			8'- 4 ½"			6'- 2"		5'- 7 ⅞"	5'- 2 ⅜"	8	4'- 5 ⅞"	3'- 3 ⅞"	2'- 1 ⅞"	0'- 11 ⅛"									139.8
24	60" x 36"						2'- 7"	4'- 11"			9'- 4 ½"			7'- 2"		5'- 7 ⅞"	5'- 8 ⅜"	10	4'- 5 ⅞"	3'- 3 ⅞"	2'- 1 ⅞"	0'- 11 ⅛"									158.2
25			65" x 40"				2'- 10"	5'- 4"			10'- 2 ⅜"			7'- 9"		6'- 2 ⅜"	5'- 2 ⅜"	10	5'- 5 ¾"	4'- 3 ¼"	3'- 1 ¾"	1'- 11 ¾"	0'-9 ¾"							2	180.1
26	72" x 36"						2'- 7"	5'- 11"			10'- 4 ½"			8'- 2"		5'- 7 ⅞"	5'- 2 ⅜"	12	4'- 6"	3'- 4"	2'- 2"	1'- 0"								3	182.5
27			72" x 44"				3'- 1"	5'- 11"			11'- 2 ⅞"			8'- 7"		6'- 8 ⅜"	5'- 2 ⅜"	12	5'- 5 ⅞"	4'- 3 ⅞"	2'- 1 ⅞"	0'- 11 ⅞"	0'-9 ⅞"								212.4
28	84" x 36"						2'- 7"	6'- 11"			11'- 4 ½"			9'- 2"		5'- 7 ⅞"	5'- 2 ⅜"	14	4'- 5 ⅞"	3'- 3 ⅞"	2'- 1 ⅞"	0'- 11 ⅞"									200.8
29	96" x 36"						2'- 7"	7'- 11"			12'- 4 ½"			10'- 2"		5'- 7 ⅞"	5'- 2 ⅜"	16	4'- 5 ⅞"	3'- 3 ⅞"	2'- 1 ⅞"	0'- 11 ⅞"									219.3
30	108" x 36"						2'- 7"	8'- 11"			13'- 4 ½"			11'- 2"		5'- 7 ⅞"	5'- 2 ⅜"	18	4'- 5 ⅞"	3'- 3 ⅞"	2'- 1 ⅞"	0'- 11 ⅞"									237.7
31	120" x 36"						2'- 7"	9'- 11"			14'- 4 ½"			12'- 2"		5'- 7 ⅞"	5'- 2 ⅜"	20	4'- 5 ⅞"	3'- 3 ⅞"	2'- 1 ⅞"	0'- 11 ⅞"								3	258.4
32	132" x 36"						2'- 7"	10'- 11"			15'- 4 ½"			13'- 2		5'- 7 ⅞"	5'- 2 ⅜"	22	4'- 5 ⅞"	3'- 3 ⅞"	2'- 1 ⅞"	0'- 11 ⅞"								4	280.3
33	144" x 36"						2'- 7"	11'- 11"	⅜"	1 ¼"	16'- 4 ½"		1 ⅝"	14'- 2"		5'- 7 ⅞"	5'- 2 ⅜"	24	4'- 5 ⅞"	3'- 3 ⅞"	2'- 1 ⅞"	0'- 11 ⅞"								4	298.7
34		48"		48"			3'- 4"	3'- 11"	¼"	1 ½"	9'- 8 ⅛"		2"	6'- 10"		7'- 3 ⅜"	6'- 8 ¾"	8	6'- 0 ⅜"	4'- 10 ⅜"	3'- 8 ½"	2'- 6 ⅜"	1'- 4 ⅜"							4	196.0
35	48" x 48"						3'- 4"	3'- 11"			9'- 8 ½"			6'- 10"		7'- 3 ⅜"	6'- 8 ¾"	8	6'- 0 ⅜"	4'- 10 ⅜"	3'- 8 ½"	2'- 6 ⅜"	1'- 4 ⅜"						1 ¼"	5	201.8
36		54"		54"			3'- 8"	4'- 5"			10'- 9 ⅞"			7'- 7"		8'- 1 ⅜"	7'- 5 ¾"	8	7'- 4 ¼"	6'- 2 ¼"	3'- 0 ¼"	3'- 10 ¼"	2'- 8 ¼"	1'- 6 ¼"					1 ½"	2	246.3
37	60" x 48"						3'- 4"	4'- 11"			10'- 8 ⅛"			7'- 10"		7'- 3 ⅜"	6'- 8 ¾"	10	6'- 0 ⅜"	4'- 10 ⅜"	3'- 8 ½"	2'- 6 ⅜"	1'- 4 ⅜"						1 ¼"	2	206.6
38	72" x 48"							5'- 11"			11'- 8 ½"			8'- 10"				12												2	228.7
39	84" x 48"							6'- 11"			12'- 8 ½"			9'- 10"				14												2	250.9
40	96" x 48"							7'- 11"			13'- 8 ½"			10'- 10"				16												3	278.9
41	108" x 48"							8'- 11"			14'- 8 ½"			11'- 10"				18												3	301.1
42	120" x 48"							9'- 11"			15'- 8 ½"			12'- 10"				20												3	323.2
43	132" x 48"							10'- 11"			16'- 8 ½"			13'- 10"				22												4	351.2
44	144" x 48"						3'- 4"	11'- 11"	¼"	1 ½"	17'- 8 ½"	½"	2"	14'- 10"	0	7'- 3 ⅜"	6'- 8 ¾"	24	6'- 0 ⅜"	4'- 10 ⅜"	3'- 8 ½"	2'- 6 ⅜"	1'- 4 ⅜"					¼"	1 ¼"	4	373.4

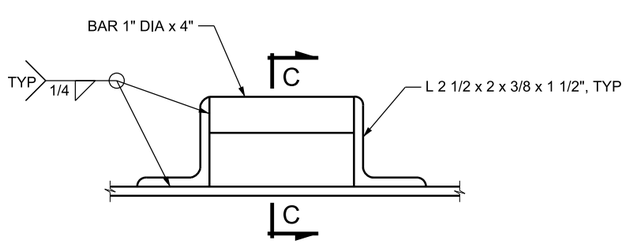

ALTERNATE HANGER ROD

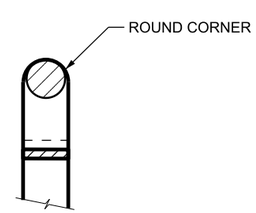

SECTION C-C

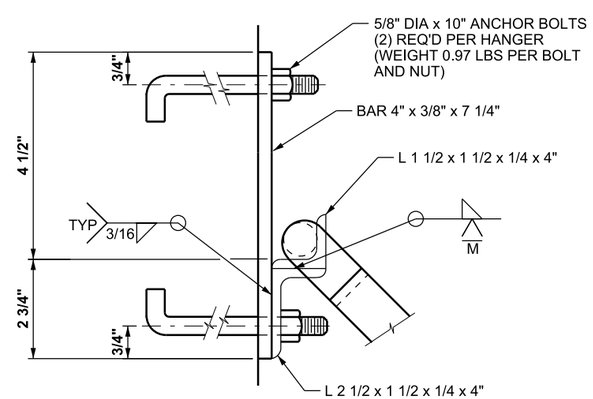

ALTERNATE HANGER ASSEMBLY

REVISIONS

NO.	DATE	APPR.	REMARKS

UTAH DEPARTMENT OF TRANSPORTATION
STANDARD DRAWINGS FOR ROAD AND BRIDGE CONSTRUCTION
SALT LAKE CITY, UTAH

RECOMMENDED FOR APPROVAL — JAN.01, 2017 — DATE
CHAIRMAN STANDARDS COMMITTEE APPROVED — JAN.01, 2017 — DATE
DEPUTY DIRECTOR

STANDARD TRASH RACKS

STANDARD DRAWING TITLE

STD. DWG. NO.
GF 11

DGN File: L:\Standard Drawings\Imperial\2017 Approved\1-All Drawings\GF11.dgn

28-NOV-2016

LINE	TO BE USED FOR (NOM.SIZE) BOX CULVERTS	CORRUGATED METAL PIPES	CORRUGATED PIPE ARCHES	CONCRETE PIPE	MULTI-PLATE ELLIPSES	MULTI-PLATE PIPE ARCHES	A	TRANSVERSE BARS 1- EACH REQUIRED L1 LENGTH	L1 THICK	L1 WIDTH	L2 LENGTH	L2 THICK	L2 WIDTH	L3 LENGTH	L4 LENGTH	MAIN BARS 2- EACH W1 LENGTH	W2 LENGTH	NO	2-EACH REQUIRED W3 LENGTH	W4 LENGTH	W5 LENGTH	W6 LENGTH	W7 LENGTH	W8 LENGTH	W9 LENGTH	W10 LENGTH	W11 LENGTH	W1 TO W11 THICK	W1 TO W11 WIDTH	NO. OF HANGER ASSEMBLY AND HANGER ROD	WEIGHT OF STRUCT STEEL LB
45	156" x 48"						3'- 4"	12'- 11"	¼"	1 ½"	18'- 8 ⅛"	½"	2"	15'- 10"	0	7'- 3 ⅞"	6'- 8 ¾"	26	6'- 0 ⅜"	4'- 10 ⅜"	3'- 8 ⅜"	2'- 6 ⅜"	1'- 4 ⅜"					¼"	1 ¼"	4	395.6
46	168" x 48"						3'- 4"	13'- 11"			19'- 8 ⅛"			16'- 10"	0	7'- 3 ⅞"	6'- 8 ¾"	28	6'- 0 ⅜"	4'- 10 ⅜"	3'- 8 ⅜"	2'- 6 ⅜"	1'- 4 ⅜"						1 ¼"	5	423.5
47	180" x 48"						3'- 4"	14'- 11"			20'- 8 ⅛"			17'- 10"	0	7'- 3 ⅞"	6'- 8 ¾"	30	6'- 0 ⅜"	4'- 10 ⅜"	3'- 8 ⅜"	2'- 6 ⅜"	1'- 4 ⅜"						1 ¼"	5	445.7
48	192" x 48"						3'- 4"	15'- 11"			21'- 8 ⅛"			18'- 10"	0	7'- 3 ⅞"	6'- 8 ¾"	32	6'- 0 ⅜"	4'- 10 ⅜"	3'- 8 ⅜"	2'- 6 ⅜"	1'- 4 ⅜"						1 ¼"	5	467.9
49						73" x 55"	2'- 6"	6'- 0"			12'- 6 ¼"			8'- 2"	10'- 4 ½"	8'- 3 ⅜"	7'- 1 ¼"	12	7'- 0"	5'- 10"	4'- 8"	3'- 6"	2'- 4"	1'- 2"					1 ½"	6	339.1
50						76" x 57"	2'- 8"	6'- 3"	¼"		12'- 11 ⅞"			8'- 6 ½"	10'- 8 ½"	8'- 6 ⅜"	7'- 10 ¼"	12	7'- 8 ½"	6'- 4 ½"	5'- 2 ⅛"	4'- 0 ½"	2'- 10 ½"	1'- 8 ½"	0'- 6 ½"						6	357.5
51		60"		60"			2'- 8"	4'- 11"	⅜"		11'- 11 ½"			7'- 2 ½"	9'- 8"	8'- 11 ⅛"	8'- 2 ½"	10	7'- 6"	6'- 4"	5'- 2"	4'- 0"	2'- 10"	1'- 8"	0'- 6"						2	310.7
52					56" x 62"		2'- 9"	4'- 7"			11'- 10 ½"			6'- 11 ½"	9'- 6"	9'- 2 ½"	8'- 5 ⅛"	10	7'- 4 ⅜"	6'- 2 ⅜"	5'- 0 ⅜"	3'- 10 ⅜"	2'- 8 ⅜"	1'- 6 ⅜"							2	309.3
53						81" x 59"	2'- 8"	5'- 8"			13'- 7 ⅜"			8'- 11 ½"	11'- 4"	8'- 9 ¾"	8'- 1 ⅛"	14	7'- 1 ⅛"	5'- 11 ⅛"	4'- 9 ⅛"	3'- 7 ⅛"	2'- 5 ⅛"	1'- 3 ½"							3	367.2
54						84" x 61"	2'- 9"	8'- 11"			14'- 1"			9'- 3 ½"	11'- 9"	9'- 1"	8'- 4 ¼"	14	7'- 7 ¾"	6'- 5 ¾"	5'- 3 ¾"	4'- 1 ¾"	2'- 11 ¾"	1'- 9 ¾"	0'- 7 ¾"						3	387.1
55						87" x 63"	2'- 10"	7'- 2"			14'- 6 ⅜"			9'- 7"	12'- 1"	9'- 4 ⅛"	8'- 7"	14	8'- 2 ⅛"	7'- 0 ⅛"	5'- 10 ⅛"	4'- 8 ½"	3'- 6 ⅛"	2'- 4 ½"	1'- 2 ⅛"						3	405.7
56	60" x 60"						2'- 8"	4'- 11"			11'- 11 ⅛"			7'- 2 ½"	9'- 8"	8'- 11 ¼"	8'- 2 ½"	10	7'- 6"	6'- 4"	5'- 2"	4'- 0"	2'- 10"	1'- 8"	0'- 6"						2	310.7
57		66"		66"			2'- 11"	5'- 5"			13'- 11 ¼"			7'- 11"	10'- 7"	9'- 8 ⅝"	8'- 11 ¼"	10	8'- 9 ¾"	7'- 7 ¾"	6'- 5 ¾"	5'- 3 ¾"	4'- 1 ¾"	2'- 11 ⅜"	1'- 9 ¾"	0'- 7 ¾"						3	365.5
58								5'- 11"			12'- 11 ½"			8'- 5"	10'- 5 ½"	8'- 11 ⅛"	8'- 2"	12	7'- 5"	6'- 4"	5'- 2"	4'- 0"	2'- 10"	1'- 8"	0'- 6"						4	354.5
59	84" x 60"							6'- 11"			13'- 11 ⅛"			9'- 5"	11'- 5 ½"			14													3	380.8
60	96" x 60"							7'- 11"			14'- 11 ½"			10'- 5"	12'- 5 ½"			16													3	412.8
61	108" x 60"							8'- 11"			15'- 11 ½"			11'- 5"	13'- 5 ½"			18													3	444.8
62	120" x 60"							9'- 11"			16'- 11 ½"			12'- 5"	14'- 5 ½"			20													4	482.7
63	132" x 60"							10'- 11"			17'- 11 ½"			13'- 5"	15'- 5 ½"			22													4	514.7
64	144" x 60"							11'- 11"			18'- 11 ½"			14'- 5"	16'- 5 ½"			24													4	546.6
65	156" x 60"							12'- 11"			19'- 11 ½"			15'- 5"	17'- 5 ½"			26													5	584.6
66	168" x 60"							13'- 11"			20'- 11 ½"			16'- 5"	18'- 5 ½"			28													5	616.8
67	180" x 60"							14'- 11"			21'- 11 ½"			17'- 5"	19'- 5 ½"			30													5	648.6
68	192" x 60"						2'- 11"	15'- 11"			22'- 11 ⅞"			18'- 5"	20'- 5 ½"	8'- 11 ⅛"	8'- 2"	32	7'- 5"	6'- 4"	5'- 2"	4'- 0"	2'- 10"	1'- 8"	0'- 6"						6	686.5
69					62" x 68"		3'- 0"	5'- 1"			12'- 11 ⅞"			7'- 8"	10'- 5"	10'- 0 ¼"	9'- 2 ½"	10	8'- 8 ½"	7'- 6 ⅜"	6'- 4 ⅜"	5'- 2 ⅜"	4'- 0 ⅜"	2'- 10 ⅜"	1'- 8 ⅜"	0'- 6⅜"						6	380.7
70						92" x 63"	2'- 11"	7'- 7"			15'- 2"			10'- 1"	12'- 6"	9'- 7 ⅜"	8'- 10"	16	7'- 8 ⅞"	6'- 6 ⅞"	5'- 4 ⅞"	4'- 2 ⅞"	3'- 0 ⅞"	1'- 10 ⅜"	0'- 8 ⅞"						3	432.2
71						95" x 67"	3'- 0"	7'- 10"			15'- 7 ½"			10'- 5"	13'- 1"	9'- 10 ⅝"	9'- 1"	16	8'- 3 ⅜"	7'- 1 ⅜"	5'- 11 ⅜"	4'- 9 ⅜"	3'- 7 ⅜"	2'- 5 ⅛"	1'- 3 ⅜"						3	452.2
72						98" x 69"	3'- 2"	8'- 1"	⅜"		16'- 0 ⅛"			10'- 9"	13'- 4 ½"	10'- 1 ⅜"	9'- 4"	16	8'- 9 ⅞"	7'- 7 ⅞"	6'- 5 ⅜"	5'- 3 ⅞"	4'- 1 ⅞"	2'- 11 ⅜"	1'- 9 ⅞"	0'- 7 ½"				1 ½"	3	473.8
73		72"		72"			3'- 2"	5'- 11"	½"		14'- 2 ⅞"			8'- 8"	11'- 8"	10'- 6 ⅜"	9'- 8 ⅜"	12	9'- 0"	7'- 10"	6'- 8"	5'- 6"	4'- 4"	3'- 2"	2'- 0"	0'- 10"				1 ¾"	4	472.8
74					67" x 75"		3'- 4"	5'- 6"			14'- 1 ¾"			8'- 4 ½"	11'- 3 ½"	10'- 11 ½"	10'- 0 ⅞"	10	10'- 0 ⅜"	8'- 10 ⅜"	7'- 8 ⅝"	6'- 6 ⅝"	5'- 4 ⅜"	4'- 2 ⅝"	3'- 0 ⅜"	1'- 10 ⅝"	0'- 8 ⅝"				4	475.6
75						103" x 71"	3'- 2"	8'- 6"			16'- 8 ⅝"			11'- 3"	14'- 0"	10'- 5"	9'- 6 ⅞"	16	9'- 6 ⅜"	8'- 4 ⅝"	7'- 2 ⅜"	5'- 0 ⅝"	4'- 10 ⅜"	3'- 8 ⅛"	2'- 6 ⅜"	1'- 4 ⅝"					4	570.8
76						106" x 73"	3'- 3"	8'- 9"			17'- 2 ½"			11'- 6 ½"	14'- 4 ⅛"	10'- 8 ¼"	9'- 9 ⅞"	18	8'- 11 ⅛"	7'- 9 ⅛"	6'- 7 ⅛"	6'- 3 ½"	4'- 3 ½"	3'- 1 ⅛"	1'- 11 ⅛"	0'- 9 ⅛"					4	598.4
77						112" x 75"	3'- 4"	9'- 3"			17'- 10 ¾"			12'- 1 ½"	15'- 0 ½"	10'- 11 ½"	10'- 0 ¼"	18	9'- 9 ⅛"	8'- 7 ⅛"	7'- 5 ⅛"	6'- 3 ⅛"	5'- 1 ⅛"	3'- 11 ⅛"	2'- 9 ⅛"	1'- 7 ⅛"					4	632.1
78						114" x 77"	3'- 5"	9'- 5"			18'- 3 ⅜"			12'- 4"	15'- 4"	11'- 2 ¾"	10'- 9 ⅞"	18	10'- 2 ½"	9'- 0 ½"	7'- 10 ½"	6'- 8 ¼"	5'- 6 ½"	4'- 4 ½"	3'- 2 ½"	2'- 0 ½"	0'- 10 ½"				3	651.1
79	72" x 72"						3'- 2"	5'- 11"			14'- 2 ⅞"			8'- 8"	11'- 6 ½"	10'- 6 ⅜"	9'- 8 ⅜"	12	9'- 0"	7'- 10"	6'- 8"	5'- 6"	4'- 4"	3'- 2"	2'- 0"	0'- 10"					3	467.0
80	84" x 72"							6'- 11"			15'- 2 ⅞"			9'- 8"	12'- 6 ½"			14													3	508.1
81	96" x 72"							7'- 11"			16'- 2 ⅞"			10'- 8"	13'- 6 ½"			16													3	549.1
82	108" x 72"							8'- 11"			17'- 2 ⅞"			11'- 8"	14'- 6 ½"			18													4	595.9
83	120" x 72"							9'- 11"			18'- 2 ½"			12'- 8"	15'- 6 ½"			20													4	636.9
84	132" x 72"							10'- 11"			19'- 2 ⅞"			13'- 8"	16'- 6 ½"			22													4	678.0
85	144" x 72"							11'- 11"			20'- 2 ⅞"			14'- 8"	17'- 6 ½"			24													5	724.8
86	156" x 72"							12'- 11"			21'- 2 ½"			15'- 8"	18'- 6 ½"			26													5	765.8
87	168" x 72"							13'- 11"			22'- 0 ½"			16'- 8"	19'- 6 ½"			28													5	806.9
88	180" x 72"							14'- 11"			23'- 2 ⅞"			17'- 8"	20'- 6 ½"			30													6	853.7
89	192" x 72"						3'- 2"	15'- 11"			24'- 2 ⅞"			18'- 8"	21'- 6 ½"	10'- 6 ⅜"	9'- 8 ⅜"	32	9'- 0"	7'- 10"	6'- 8"	5'- 6"	4'- 4"	3'- 2"	2'- 0"	0'- 10"					6	894.7
90						96" x 74"	3'- 3"	7'- 11"	½"	1 ½"	16'- 5 ⅝"	½"	2"	10'- 8 ½"	13'- 8"	10'- 10"	9'- 11 ⅝"	15	9'- 10"	8'- 8"	7'- 6"	6'- 4"	5'- 2"	4'- 0"	2'- 10"	1'- 8"		¼"	1 ¾"	3	540.7

REVISIONS

NO.	DATE	APPR.	REMARKS

UTAH DEPARTMENT OF TRANSPORTATION
STANDARD DRAWINGS FOR ROAD AND BRIDGE CONSTRUCTION
SALT LAKE CITY, UTAH

RECOMMENDED FOR APPROVAL — JAN.01, 2017 — DATE
CHAIRMAN STANDARDS COMMITTEE APPROVED — JAN.01, 2017 — DATE
DEPUTY DIRECTOR

STANDARD TRASH RACKS
STANDARD DRAWING TITLE

STD. DWG. NO.
GF 12

DGN File: L:\Standard Drawings\Imperial\2017 Approved\1-All Drawings\GF12.dgn
28-NOV-2016

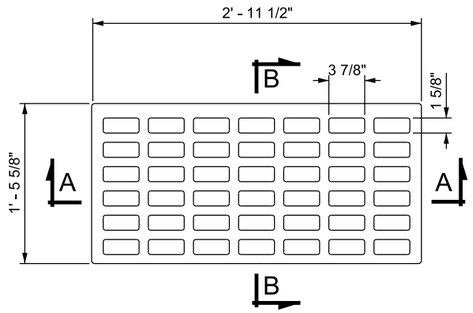

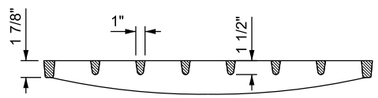

SECTION A-A

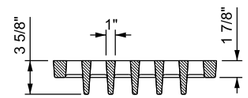

SECTION B-B

BICYCLE-SAFE GRATE

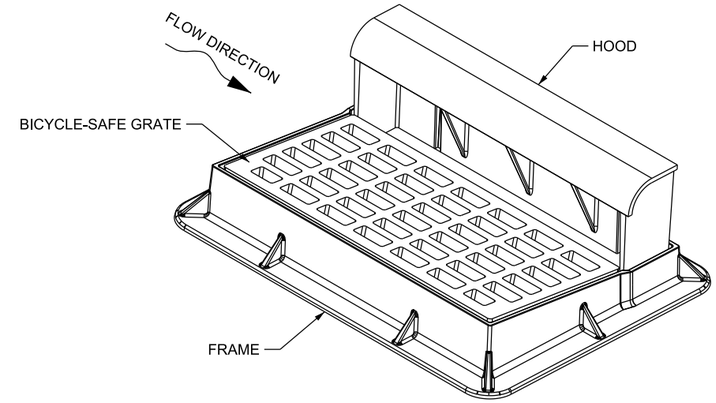

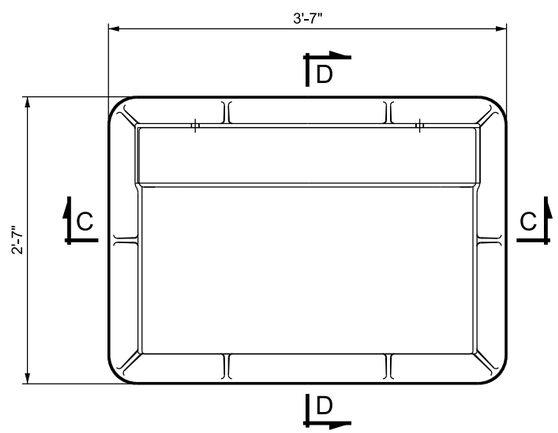

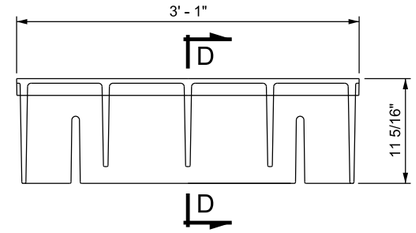

FRONT VIEW

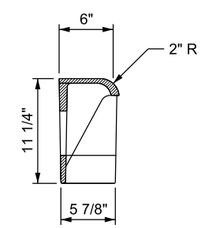

SECTION E-E

HOOD

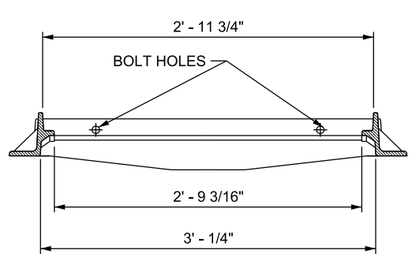

SECTION C-C

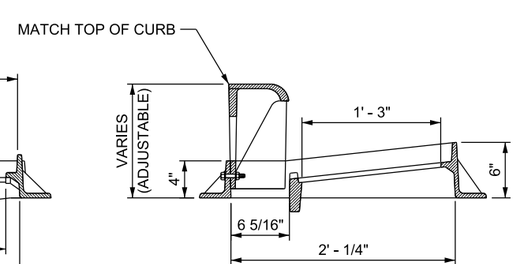

SECTION D-D

FRAME

NOTES

1. FURNISH OPEN CURB INLET GRATE AND FRAME IN EITHER GREY IRON OR DUCTILE IRON.
2. DIMENSIONS OF THE GRATE AND FRAME MAY VARY DUE TO DIFFERENT MANUFACTURER'S CONFIGURATIONS.
3. DELIVER FRAME FULLY ASSEMBLED AND BOLTED TOGETHER.

REVISIONS			
NO.	DATE	APPR.	REMARKS

UTAH DEPARTMENT OF TRANSPORTATION
STANDARD DRAWINGS FOR ROAD AND BRIDGE CONSTRUCTION
SALT LAKE CITY, UTAH

RECOMMENDED FOR APPROVAL — JAN.01.2017 DATE
CHAIRMAN STANDARDS COMMITTEE APPROVED — JAN.01.2017 DATE
DEPUTY DIRECTOR

STANDARD DRAWING TITLE
OPEN CURB INLET GRATE AND FRAME

STD. DWG. NO.
GF 13

DGN File:L:\Standard Drawings\Imperial\2017 Approved\1-All Drawings\GF13.dgn
28-NOV-2016

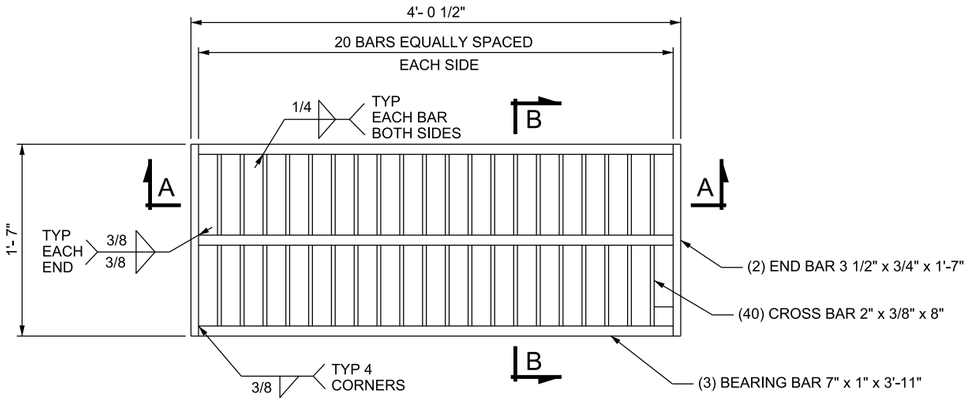

PLAN

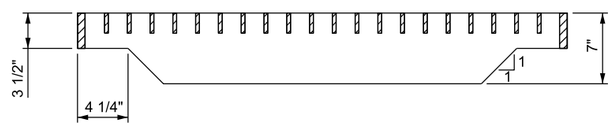

SECTION A-A

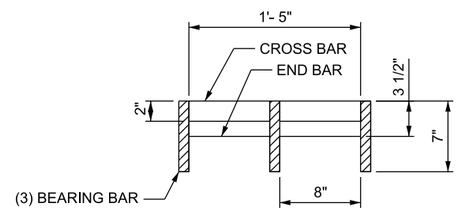

SECTION B-B

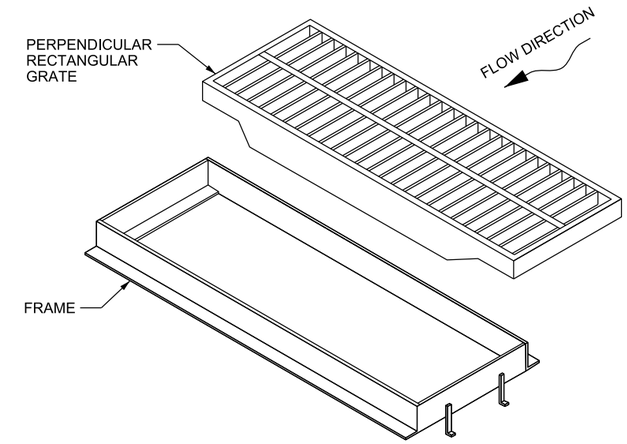

PERPENDICULAR RECTANGULAR GRATE

WEIGHT: 341 LB
OPEN AREA: 4.39 FT^2

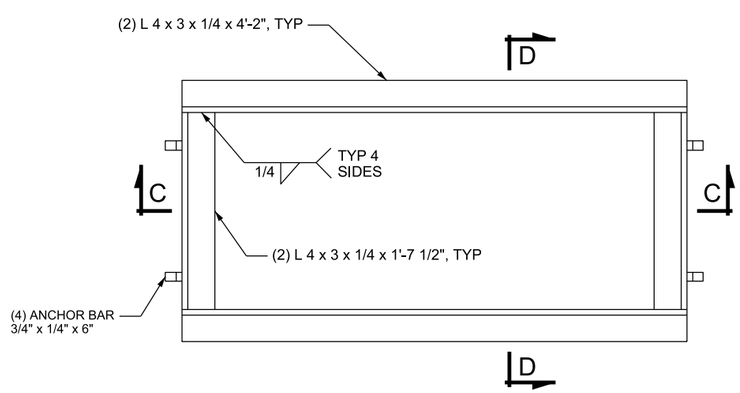

PLAN

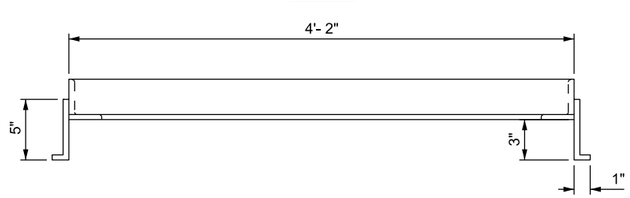

SECTION C-C

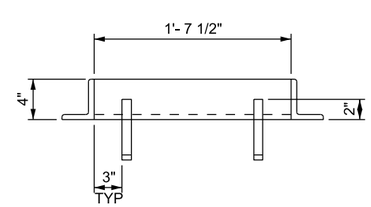

SECTION D-D

FRAME

WEIGHT: 68 LB

DESIGN DATA

HL-93 IN ACCORDANCE WITH AASHTO LRFD BRIDGE DESIGN AND INTERIM SPECIFICATIONS

STRUCTURAL STEEL: Fy = 36,000 psi

DESIGN ONLY NOTES

A. ROTATE OR ENLARGE CATCH BASIN TO ACCEPT GRATE AND FRAME

NOTES

1. FURNISH RECTANGULAR GRATE AND FRAME IN STRUCTURAL STEEL.
2. WELD ALL JOINTS WITH A 1/4 INCH FILLET WELD UNLESS NOTED OTHERWISE.

REVISIONS

NO.	DATE	APPR.	REMARKS

UTAH DEPARTMENT OF TRANSPORTATION
STANDARD DRAWINGS FOR ROAD AND BRIDGE CONSTRUCTION
SALT LAKE CITY, UTAH

RECOMMENDED FOR APPROVAL — JAN.01, 2017 DATE
CHAIRMAN STANDARDS COMMITTEE APPROVED — JAN.01, 2017 DATE
DEPUTY DIRECTOR

STANDARD DRAWING TITLE
PERPENDICULAR RECTANGULAR GRATE AND FRAME

STD. DWG. NO.
GF 16

DGN File:L:\Standard Drawings\Imperial\2017 Approved\1-All Drawings\GF16.dgn
28-NOV-2016

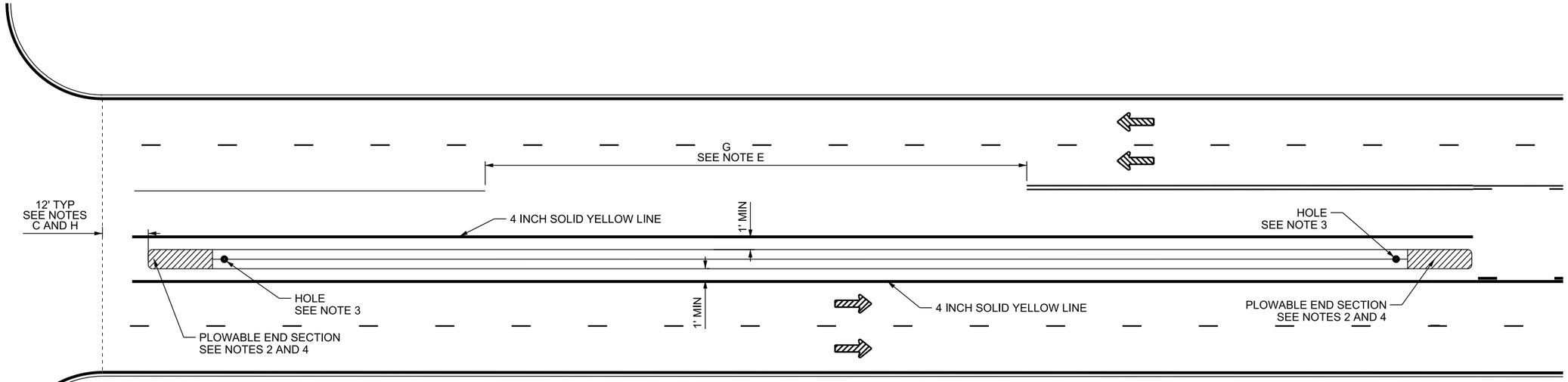

ISLAND WITHOUT CROSSWALK, STOP OR YIELD LINE
DETAIL GW 1A-1

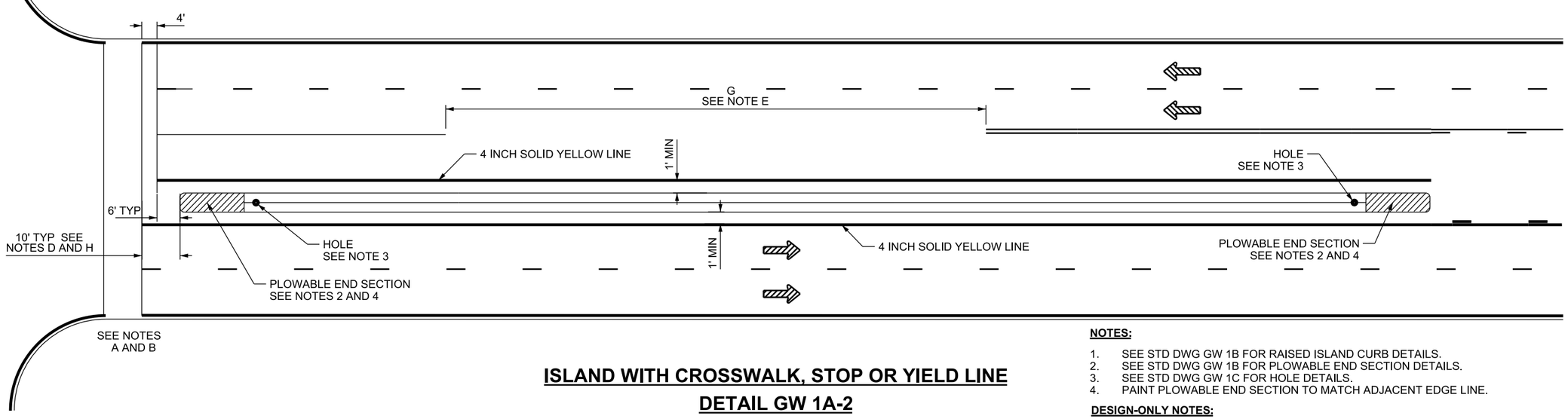

ISLAND WITH CROSSWALK, STOP OR YIELD LINE
DETAIL GW 1A-2

NOTES:

1. SEE STD DWG GW 1B FOR RAISED ISLAND CURB DETAILS.
2. SEE STD DWG GW 1B FOR PLOWABLE END SECTION DETAILS.
3. SEE STD DWG GW 1C FOR HOLE DETAILS.
4. PAINT PLOWABLE END SECTION TO MATCH ADJACENT EDGE LINE.

DESIGN-ONLY NOTES:

A. SEE STD DWG ST 4 FOR STANDARD CROSSWALK, STOP AND YIELD LINE MARKINGS.
B. SEE STD DWG ST 9 FOR SCHOOL CROSSWALK, STOP AND YIELD LINE MARKINGS.
C. PLACE ISLAND IN RELATION TO PC/PT OF CURB SHOULDER.
D. PLACE ISLAND IN RELATION TO CROSSWALK, STOP OR YIELD LINE.
E. SEE ST SERIES STD DWGS FOR STRIPING.
F. LENGTH OF ISLAND DETERMINED BY REGION TRAFFIC ENGINEER.
G. SEE STD DWG ST 5 FOR PAVEMENT MARKING DETAILS.
H. SETBACK FOR BEGINNING OF PLOWABLE END SECTION MAY INCREASE FOR SITE SPECIFIC APPLICATIONS.

REVISIONS

NO.	DATE	APPR.	REMARKS

UTAH DEPARTMENT OF TRANSPORTATION
STANDARD DRAWINGS FOR ROAD AND BRIDGE CONSTRUCTION
SALT LAKE CITY, UTAH

RECOMMENDED FOR APPROVAL — JAN. 01, 2017 DATE
CHAIRMAN STANDARDS COMMITTEE APPROVED — JAN. 01, 2017 DATE
DEPUTY DIRECTOR

RAISED ISLAND
STANDARD DRAWING TITLE

STD. DWG. NO.
GW 1A

DGN File: L:\Standard Drawings\Imperial\2017 Approved\1-All Drawings\GW01A.dgn
28-NOV-2016

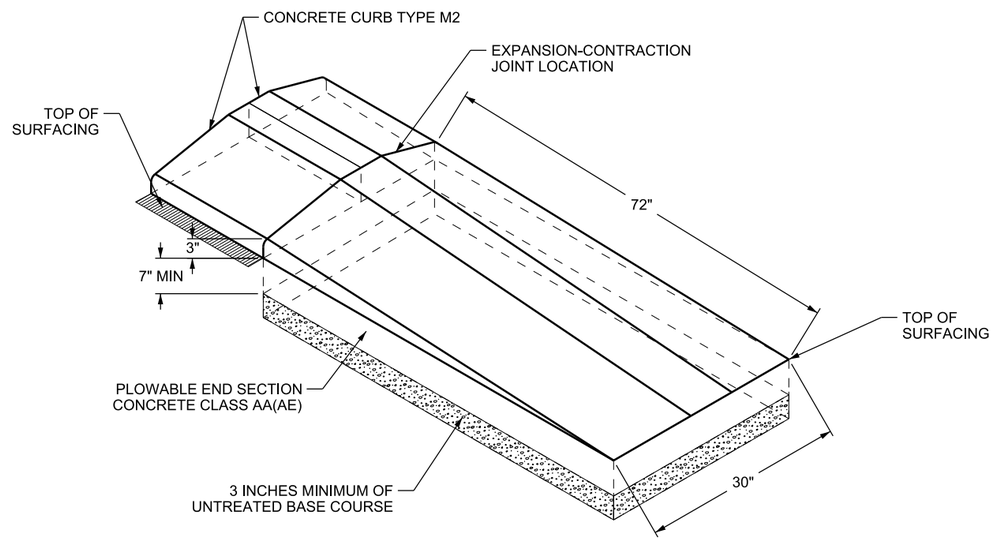

PLOWABLE END SECTION DETAIL

TYPE "M2" CURB

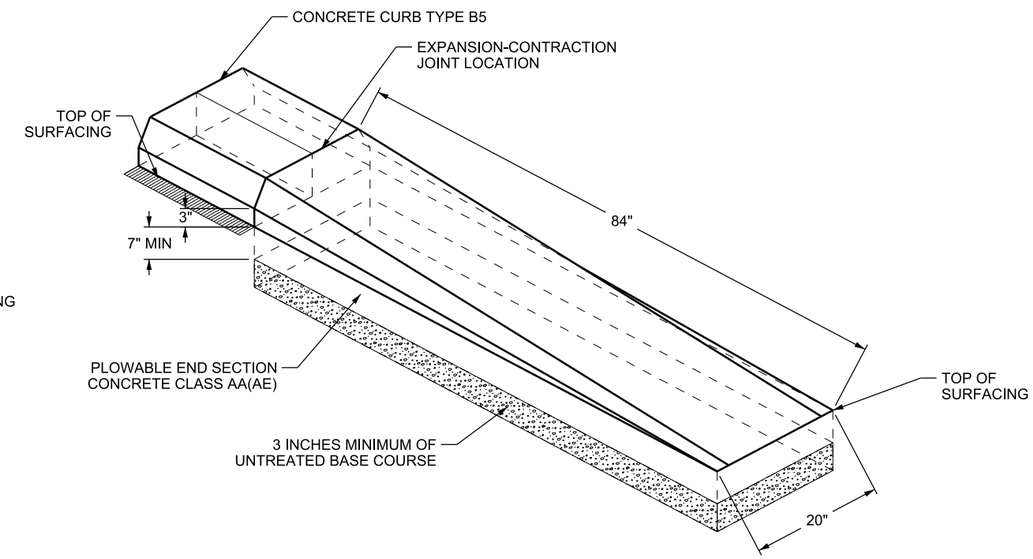

PLOWABLE END SECTION DETAIL

TYPE "B5" CURB

NOTES:

1. SEE STD DWG GW 2A FOR M2 AND B5 CURB DETAILS.
2. PAINT PLOWABLE END SECTION TO MATCH ADJACENT EDGE LINE.
3. SEE STD DWG GW 1C FOR HOLE DETAILS.
4. SEE STD DWG GW 1D FOR MEDIAN REFLECTOR DETAILS.
5. SEE STD DWG GW 3A FOR EXPANSION-CONTRACTION JOINT DETAILS.

DESIGN-ONLY NOTES:

A. RAISED ISLAND IS TWO TYPE M2 OR TYPE B5 CURBS TYPICALLY PLACED BACK-TO-BACK.

REVISIONS

NO.	DATE	APPR.	REMARKS

UTAH DEPARTMENT OF TRANSPORTATION
STANDARD DRAWINGS FOR ROAD AND BRIDGE CONSTRUCTION
SALT LAKE CITY, UTAH

RECOMMENDED FOR APPROVAL — JAN. 01, 2017 DATE
CHAIRMAN STANDARDS COMMITTEE APPROVED — JAN. 01, 2017 DATE
DEPUTY DIRECTOR

RAISED ISLAND AND PLOWABLE END SECTION
STANDARD DRAWING TITLE

STD. DWG. NO.
GW 1B

28-NOV-2016 DGN File:L:\Standard Drawings\Imperial\2017 Approved\1-All Drawings\GW01B.dgn

B3 SLIPBASE IN NARROW ISLANDS

ISLANDS LESS THAN 30" WIDE

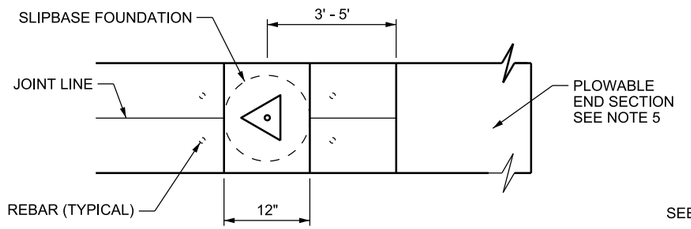

PLAN VIEW

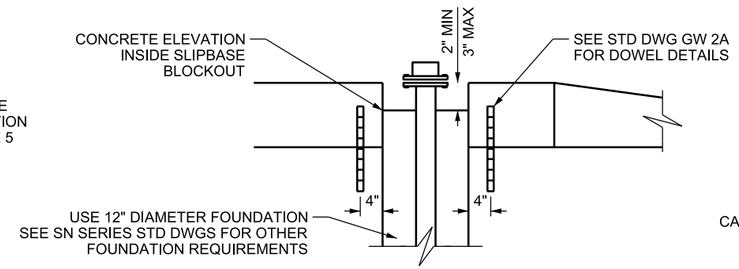

CROSS SECTION AT SIGN

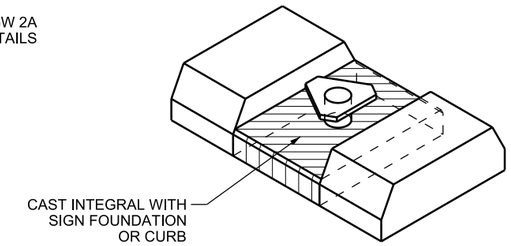

BLOCKOUT DETAIL

B3 SLIPBASE IN INTERMEDIATE WIDTH ISLANDS

ISLANDS 30" TO 72" WIDE

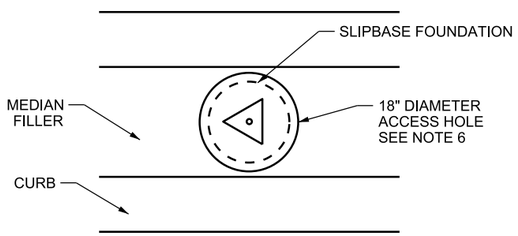

PLAN VIEW

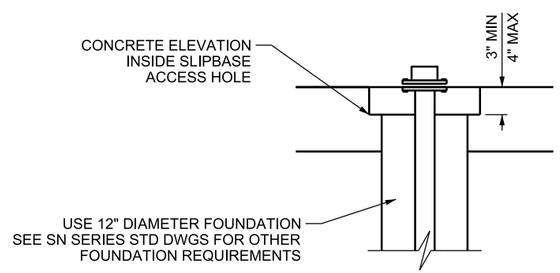

CROSS SECTION AT SIGN

B3 SLIPBASE IN WIDE ISLANDS

ISLANDS GREATER THAN 72" WIDE

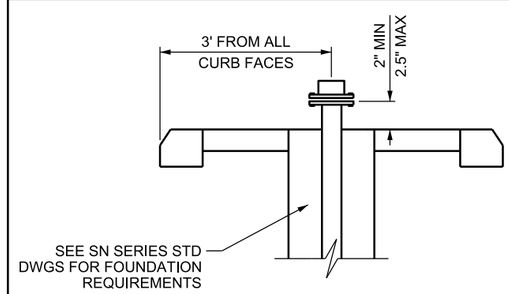

TUBULAR STEEL POST DETAIL FOR RAISED ISLAND

SEE NOTE 3

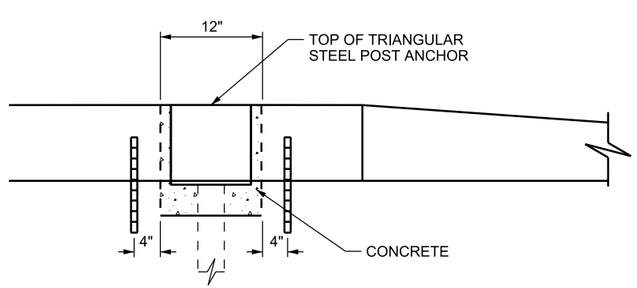

NOTES:

1. PLACE TOP OF SLIPBASE STUD POST FLUSH WITH THE TOP OF THE ISLAND (EXCLUDING WIDE ISLANDS) WITH A TOLERANCE OF + ⅛ INCH.
2. SEE SN SERIES STD DWGS FOR SLIPBASE DETAILS.
3. SEE SN SERIES STD DWGS FOR TUBULAR STEEL POST BASE.
4. KEEP EDGE OF SIGN BEHIND FACE OF CURB AS SHOWN ON STD DWG SN 7A. DO NOT EXCEED 3 INCH OVERHANG WHEN SIGN IS WIDER THAN ISLAND.
5. PAINT PLOWABLE END SECTION TO MATCH ADJACENT EDGE LINE.
6. ACCESS HOLE MAY BE FORMED OR CORE DRILLED. ACCESS HOLE MAY BE SQUARE PROVIDED CONTRACTION JOINTS ARE CUT OR TOOLED AT EACH CORNER.

REVISIONS

NO.	DATE	APPR.	REMARKS

UTAH DEPARTMENT OF TRANSPORTATION

STANDARD DRAWINGS FOR ROAD AND BRIDGE CONSTRUCTION

SALT LAKE CITY, UTAH

RECOMMENDED FOR APPROVAL — JAN. 01, 2017 DATE

CHAIRMAN STANDARDS COMMITTEE APPROVED — JAN. 01, 2017 DATE

DEPUTY DIRECTOR

RAISED ISLAND DETAILS

STANDARD DRAWING TITLE

STD. DWG. NO.

GW 1C

DGN File: L:\Standard Drawings\Imperial\2017 Approved\1-All Drawings\GW01C.dgn
28-NOV-2016

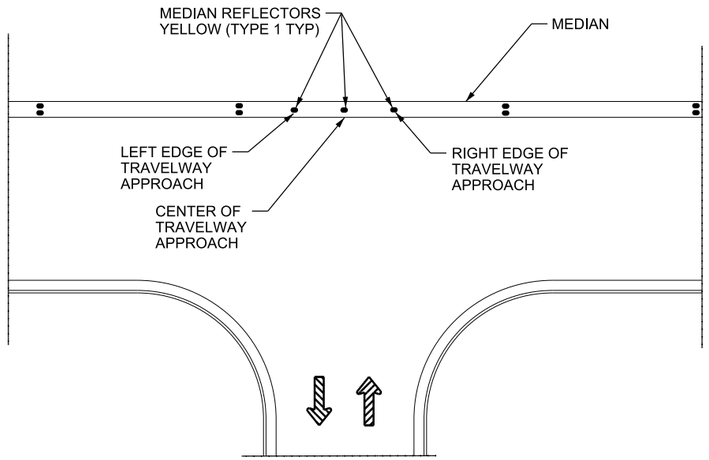

MEDIAN REFLECTOR PLACEMENT DETAIL AT MINOR CROSS STREET

SEE NOTE 3

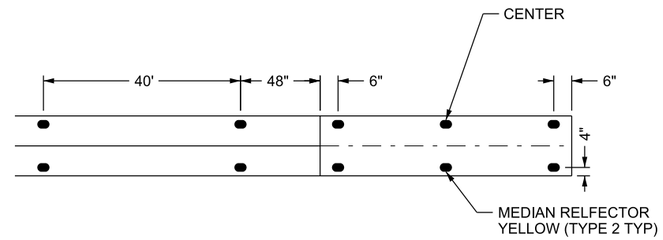

END SECTION PLAN VIEW

TYPE B SHOWN, TYPE M SIMILAR

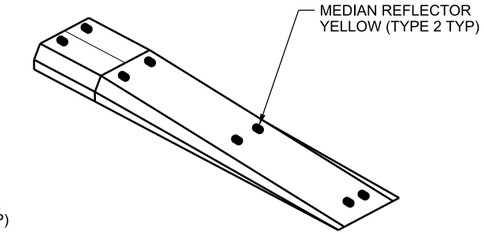

END SECTION ISOMETRIC VIEW

TYPE B SHOWN, TYPE M SIMILAR

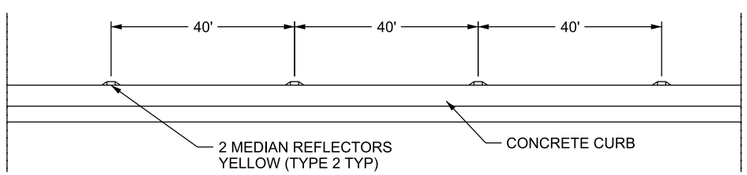

MEDIAN REFLECTOR PLACEMENT DETAIL

ELEVATION VIEW

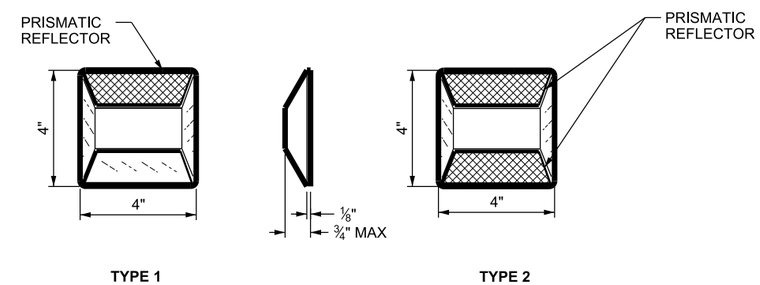

MEDIAN REFLECTOR DETAIL

TYP (MAY VARY BY MANUFACTURER)

NOTES:

1. DO NOT PLACE REFLECTORS ON JOINTS.
2. PLACE REFLECTIVE SURFACE TO FACE APPROACHING TRAFFIC.
3. PLACE THREE ADDITIONAL REFLECTORS AT EVERY CROSS STREET OR DRIVEWAY. ROTATE THE REFLECTIVE SURFACES TO FACE THE CROSS STREET OR DRIVEWAY.
4. MATCH REFLECTOR COLOR TO ADJACENT PAVEMENT MARKINGS.

DESIGN-ONLY NOTES:

A. ONLY USE MEDIAN REFLECTORS AT THE DIRECTION OF THE REGION TRAFFIC ENGINEER.

B. USE 40 FT SPACING BETWEEN MEDIAN REFLECTORS. 80 FT SPACING MAY BE USED AT THE DIRECTION OF THE REGION TRAFFIC ENGINEER.

C. USE TYPE 2 REFLECTORS FOR MEDIAN.

D. USE TYPE 1 REFLECTORS FOR CROSS STREETS AND DRIVEWAYS.

E. SEE STD DWG GW 1A FOR REQUIRED PAVEMENT MARKINGS.

REVISIONS

NO.	DATE	APPR.	REMARKS

UTAH DEPARTMENT OF TRANSPORTATION
STANDARD DRAWINGS FOR ROAD AND BRIDGE CONSTRUCTION
SALT LAKE CITY, UTAH

RECOMMENDED FOR APPROVAL — JAN. 01, 2017 DATE
CHAIRMAN STANDARDS COMMITTEE APPROVED — JAN. 01, 2017 DATE
DEPUTY DIRECTOR

MEDIAN REFLECTOR DETAILS

STANDARD DRAWING TITLE

STD. DWG. NO.
GW 1D

DGN File: L:\Standard Drawings\Imperial\2017 Approved\1-All Drawings\GW01D.dgn
28-NOV-2016

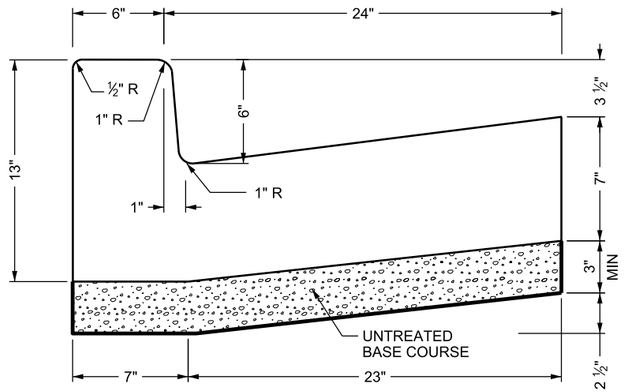

TYPE B1 CURB & GUTTER

AREA = 1.680 SQ FT

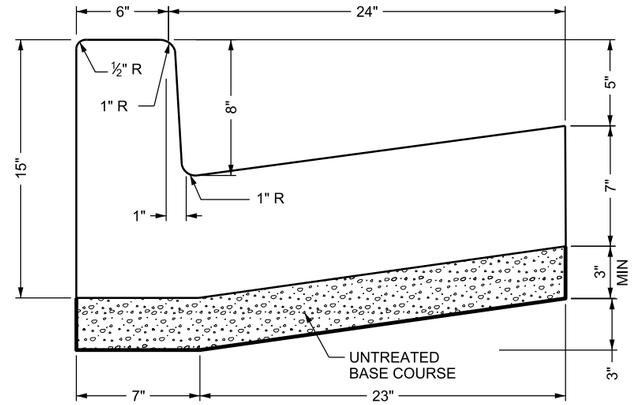

TYPE B2 CURB & GUTTER

AREA = 1.765 SQ FT

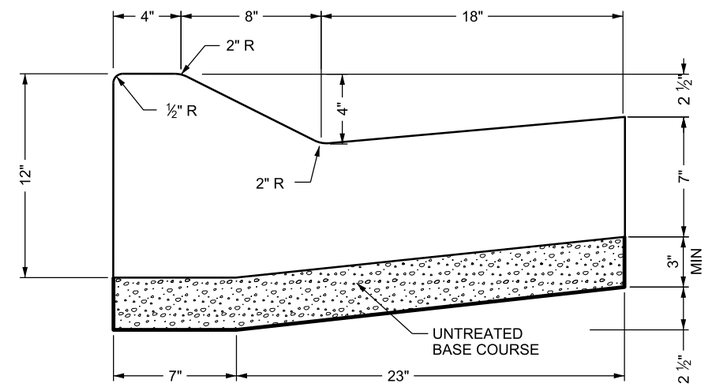

TYPE M1 CURB & GUTTER

AREA = 1.700 SQ FT

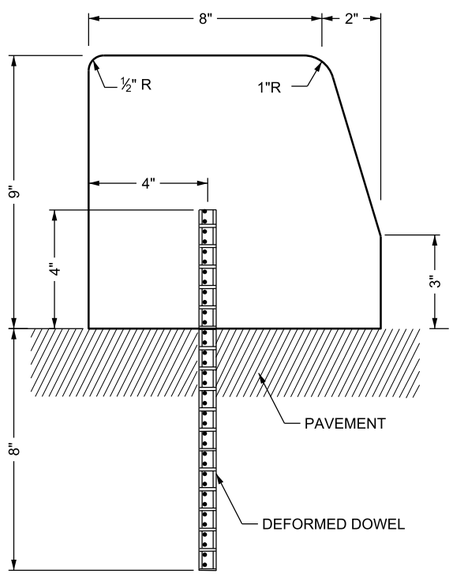

TYPE B3 CURB

AREA = 0.580 SQ FT

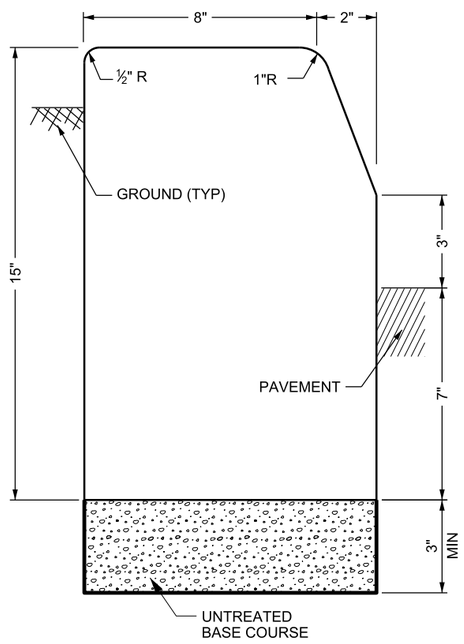

TYPE B4 CURB

AREA = 1.033 SQ FT

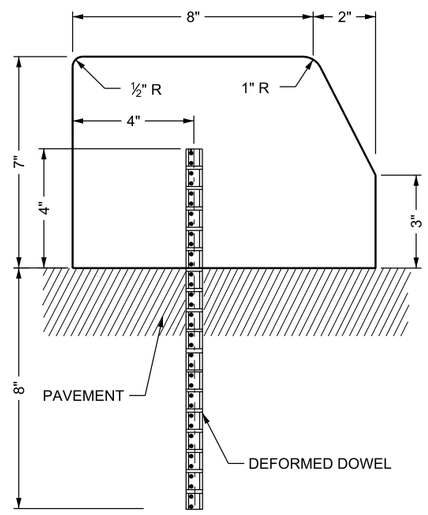

TYPE B5 CURB RAISED MEDIAN

AREA = 0.490 SQ FT

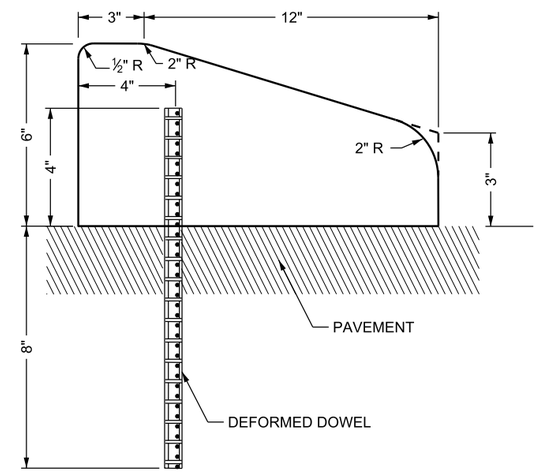

TYPE M2 CURB

AREA = 0.484 SQ FT

NOTES:

1. USE ¾ INCH DEFORMED DOWELS ON 5 FT MAXIMUM CENTERS.
2. PRECAST CURBS:
   A. MINIMUM OF 10 FT IN LENGTH.
   B. DOWELS AT A MINIMUM OF 3 PER 10 FT LENGTH.
   C. INCLUDE ADEQUATE REINFORCING STEEL TO WITHSTAND HANDLING STRESSES.
3. MEASURE CURB HEIGHT VERTICALLY FROM THE FLOW LINE OF THE GUTTER TO TOP BACK OF CURB.
4. REFER TO STD DWG GW 2B FOR CURB AND GUTTER AT ADA ACCESSES.

DESIGN-ONLY NOTES:

A. DRAINAGE CURBS: TYPE B1, B2 & M1.

B. MOUNTABLE CURBS: TYPES M1 & M2. REFER TO THE AASHTO POLICY ON GEOMETRIC DESIGN OF HIGHWAYS AND STREETS FOR APPLICATION.

C. USE CURBS TYPES B1, B2, B3, B4 & B5 WITH DESIGN SPEED UP TO 40 MPH EXCEPT IN PREDOMINATELY URBAN OR RAPIDLY DEVELOPING RURAL AREAS WHERE CURBS MAY BE USED WITH DESIGN SPEEDS UP TO 50 MPH.

D. USE TYPE B4 ONLY AS BORDER CURB.

REVISIONS

NO.	DATE	APPR.	REMARKS

UTAH DEPARTMENT OF TRANSPORTATION
STANDARD DRAWINGS FOR ROAD AND BRIDGE CONSTRUCTION
SALT LAKE CITY, UTAH

RECOMMENDED FOR APPROVAL — JAN. 01, 2017 DATE
CHAIRMAN STANDARDS COMMITTEE APPROVED — JAN. 01, 2017 DATE
DEPUTY DIRECTOR

CONCRETE CURB AND GUTTER TYPES

STANDARD DRAWING TITLE

STD. DWG. NO.

GW 2A

DGN File:L:\Standard Drawings\Imperial\2017 Approved\1-All Drawings\GW02A.dgn
28-NOV-2016

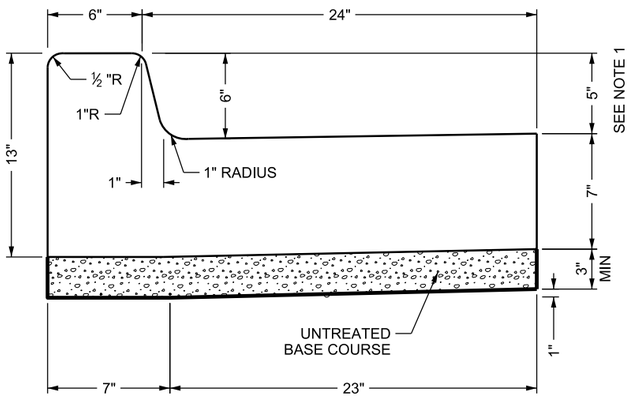

TYPE B1-A CURB & GUTTER

GUTTER PAN SLOPE REDUCED FOR ADA ACCESS
AREA = 1.680 SQ FT

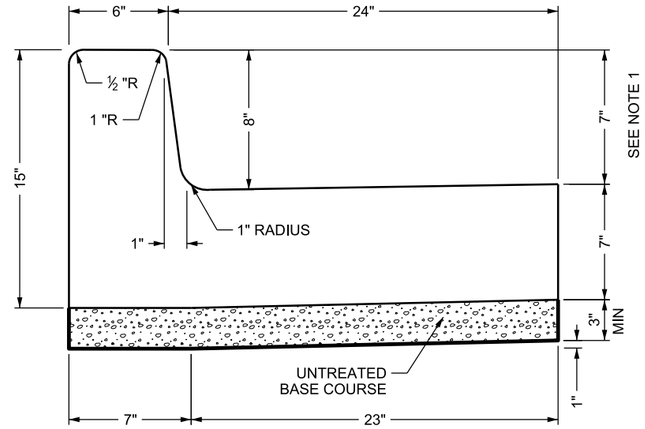

TYPE B2-A CURB & GUTTER

GUTTER PAN SLOPE REDUCED FOR ADA ACCESS
AREA = 1.765 SQ FT

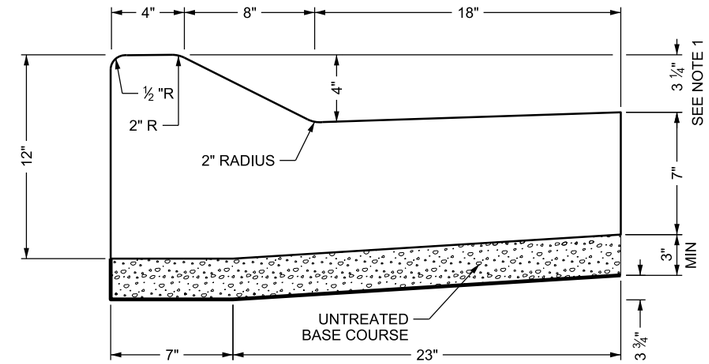

TYPE M1-A CURB & GUTTER

GUTTER PAN SLOPE REDUCED FOR ADA ACCESS
AREA = 1.700 SQ FT

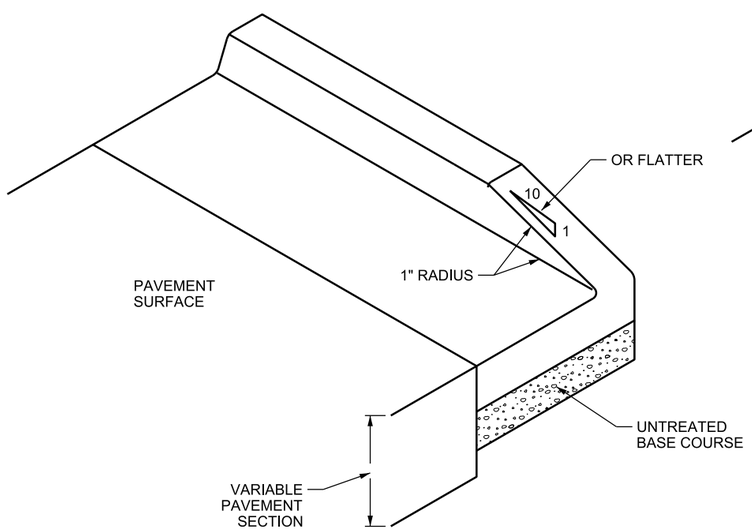

TYPICAL CURB & GUTTER END DETAIL

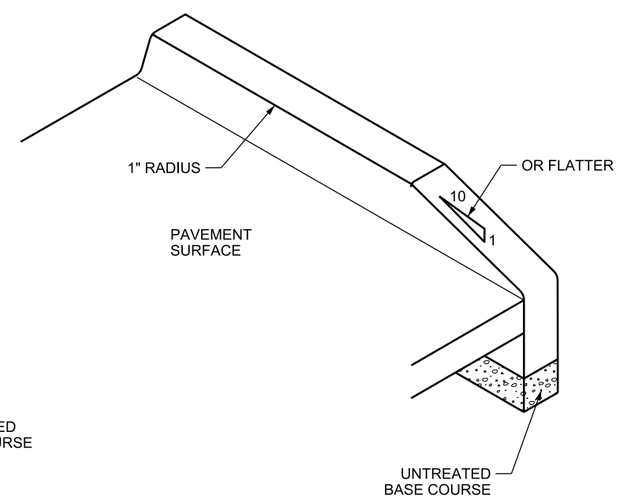

TYPICAL CURB END DETAIL

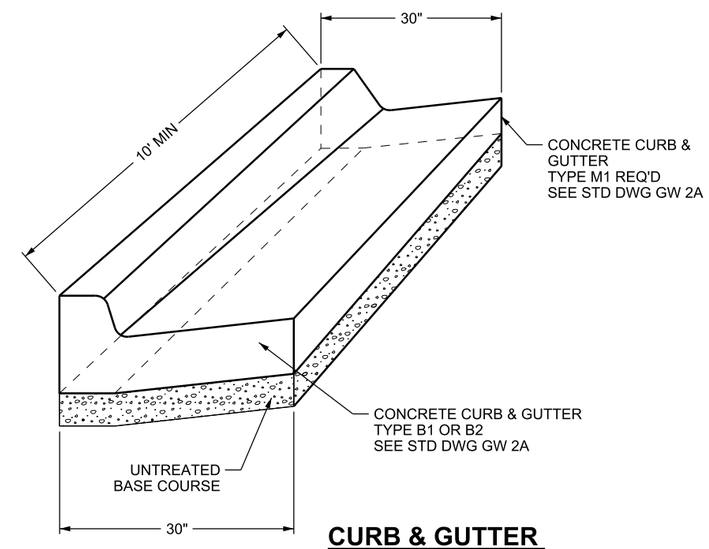

CURB & GUTTER TRANSITION DETAIL

NOTE:

1. FLATTEN GUTTERS AS SHOWN AT ADA ACCESS LOCATIONS. FLATTEN GUTTER BETWEEN ACCESSES AS WELL AS AT CURB ACCESSES WHERE MORE THAN ONE ACCESS WILL BE CONSTRUCTED AT A CORNER.

REVISIONS

NO.	DATE	APPR.	REMARKS

UTAH DEPARTMENT OF TRANSPORTATION
STANDARD DRAWINGS FOR ROAD AND BRIDGE CONSTRUCTION
SALT LAKE CITY, UTAH

RECOMMENDED FOR APPROVAL — JAN. 01, 2017 DATE
CHAIRMAN STANDARDS COMMITTEE APPROVED — JAN. 01, 2017 DATE
DEPUTY DIRECTOR

CONCRETE
CURB AND GUTTER
DETAILS

STANDARD DRAWING TITLE

STD. DWG. NO.
GW 2B

DGN File: L:\Standard Drawings\Imperial\2017 Approved\L-All Drawings\GW02B.dgn
28-NOV-2016

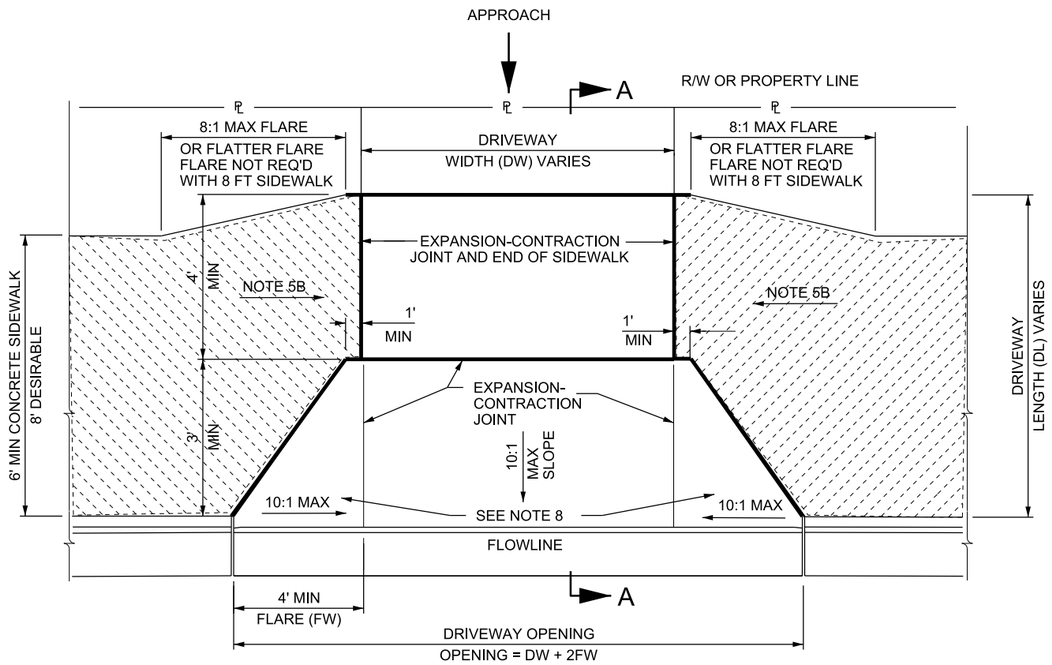

FLARED DRIVEWAY WITH ADJACENT SIDEWALK

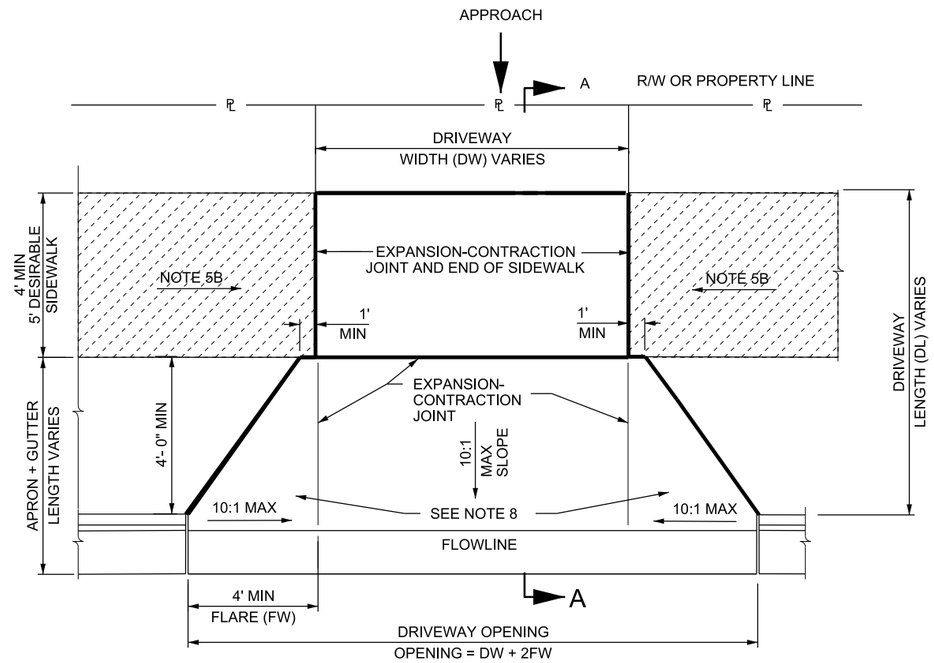

FLARED DRIVEWAY WITH PARKSTRIP

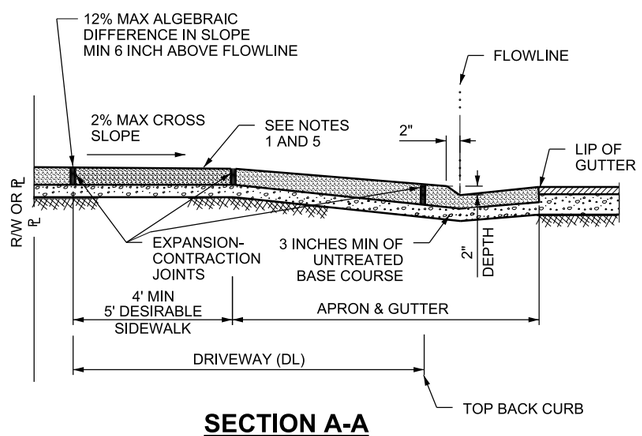

SECTION A-A

DRIVEWAY FLARE AREA CHART	
FLARED DRIVEWAY	
DISTANCE FROM BACK OF CURB TO SIDEWALK	FLARE AREA
3 FT	18 ft^2
4 FT	24 ft^2
6 FT	36 ft^2
8 FT	48 ft^2
10 FT	60 ft^2
ADD (DL)(DW) FOR	
TOTAL QUANTITY	
QUANTITY CALCULATED USING A 6 INCH CURB	

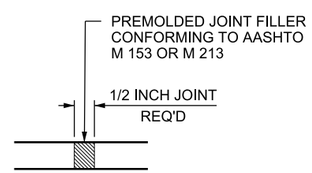

EXPANSION-CONTRACTION JOINT DETAIL

NOTES:

1. SIDEWALK CROSS SLOPE DIMENSIONS SHOWN ARE NOT SUBJECT TO CONVENTIONAL INDUSTRY TOLERANCES. CONSTRUCT SIDEWALKS AND RAMPS SUCH THAT THE MAXIMUM OR MINIMUM VALUES ARE NOT EXCEEDED. WORK THAT EXCEEDS THOSE VALUES WILL NOT BE ACCEPTED.
2. MAXIMUM DISTANCE BETWEEN CONTROL JOINTS 10 FT LATERALLY AND LONGITUDINALLY SPACED EQUALLY.
3. PROVIDE EXPANSION-CONTRACTION JOINTS IN CONCRETE SIDEWALK AT 30 FT INTERVALS AND WHERE CONCRETE SIDEWALK BUTTS AGAINST DRIVEWAY.
4. SIDEWALK INSIDE THE DRIVEWAY LIMITS IS PAID AS PART OF DRIVEWAY, NOT AS PART OF SIDEWALK.
5. FLARED CONCRETE DRIVEWAY
   A. RESIDENTIAL = 6 INCH THICK, COMMERCIAL = 7 INCH THICK. USE THESE THICKNESSES FOR APRON, SIDEWALK WITHIN DRIVEWAY AREA, APPROACH AND FLARE.
   B. DEPRESS THE LONGITUDINAL SLOPE OF THE SIDEWALK AT A MAXIMUM RATE OF 5 PERCENT TO MEET THE APRON - APPROACH ELEVATION IF THE GRADES SHOWN ON THE SLOPE DETAIL CANNOT BE MET. THE TOP BACK OF SIDEWALK IS TO BE A MINIMUM 6 INCHES ABOVE THE FLOWLINE OF CURB AND GUTTER AT ALL TIMES.
6. USE CLASS AA(AE) CONCRETE FOR SIDEWALK AND DRIVEWAYS.
7. USE UNTREATED BASE COURSE UNDER ALL SIDEWALKS AND DRIVEWAYS.
8. QUANTITIES FOR DRIVEWAYS INCLUDE FLARES TO TOP BACK OF CURB. CURB AND GUTTER PAID SEPARATELY THROUGH DRIVEWAY LOCATIONS.
9. REMOVE EXISTING SIDEWALK AND REPLACE BACK TO NEAREST EXPANSION-CONTRACTION JOINT.
10. APPROACH IS FROM EXISTING DRIVEWAY TIE-IN TO TOP-BACK-CURB AND IS PART OF DRIVEWAY QUANTITIES.

DESIGN-ONLY NOTES:

A. DRIVEWAY DIMENSIONS (MAX.& MIN.) ARE LOCATED IN UDOT "ADMINISTRATIVE RULE R930-6 ACCOMMODATION OF UTILITIES AND THE CONTROL AND PROTECTION OF STATE HIGHWAY RIGHTS OF WAY."

REVISIONS

NO.	DATE	APPR.	REMARKS

UTAH DEPARTMENT OF TRANSPORTATION
STANDARD DRAWINGS FOR ROAD AND BRIDGE CONSTRUCTION
SALT LAKE CITY, UTAH

RECOMMENDED FOR APPROVAL — JAN. 01, 2017 DATE
CHAIRMAN STANDARDS COMMITTEE APPROVED — JAN. 01, 2017 DATE
DEPUTY DIRECTOR

CONCRETE DRIVEWAYS AND SIDEWALKS
STANDARD DRAWING TITLE

STD. DWG. NO.
GW 3A

28-NOV-2016 DGN File:L:\Standard_Drawings\Imperial\2017 Approved\1-All Drawings\GW03A.dgn

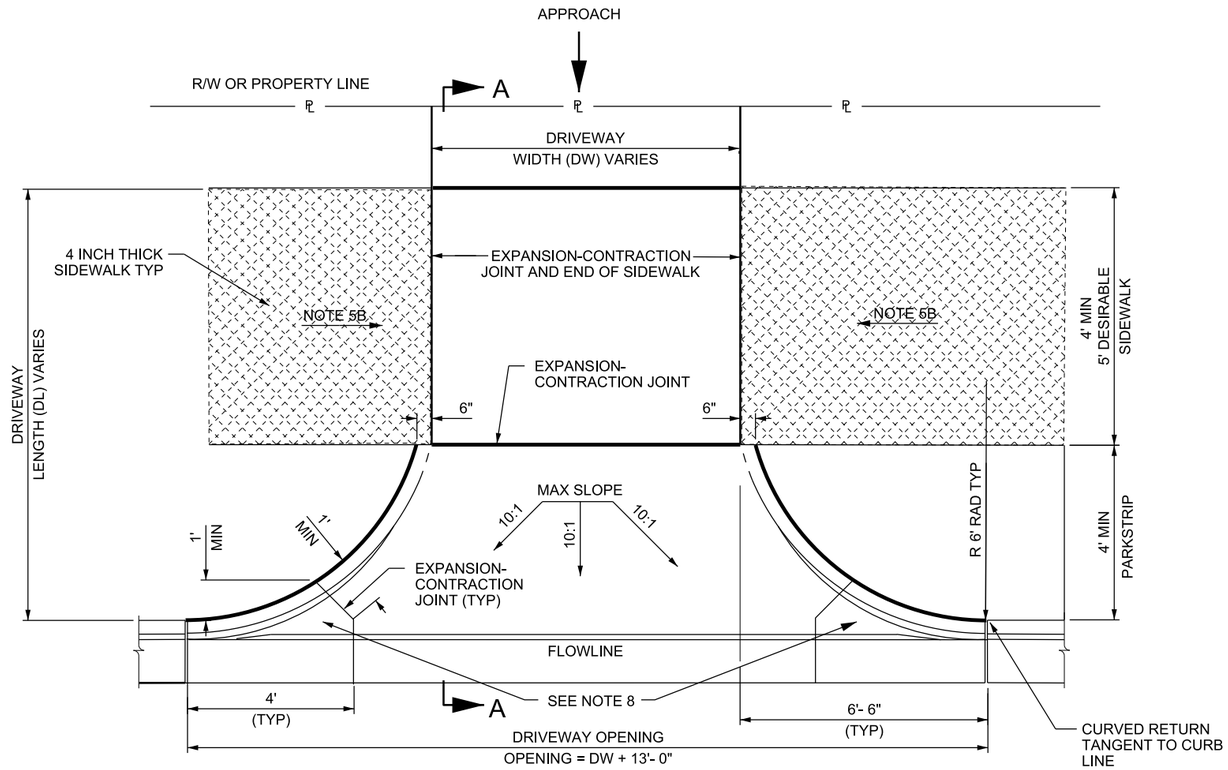

OPEN CONCRETE DRIVEWAY

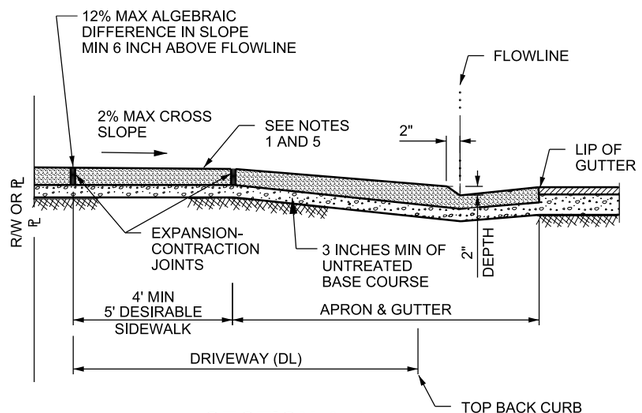

SECTION A-A

DRIVEWAY FLARE AREA CHART	
OPEN DRIVEWAY	
PARKSTRIP WIDTH	FLARE AREA
4 FT	15.00 ft^2
5 FT	15.40 ft^2
6 FT	15.45 ft^2

NOTES:
1. 6 FT RADIUS TYPICAL
2. ft^2 QUANTITY FOR BOTH SIDES OF DRIVEWAY

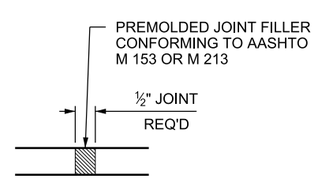

EXPANSION-CONTRACTION JOINT DETAIL

NOTES:

1. SIDEWALK CROSS SLOPE DIMENSIONS SHOWN ARE NOT SUBJECT TO CONVENTIONAL INDUSTRY TOLERANCES. CONSTRUCT SIDEWALKS AND RAMPS SUCH THAT THE MAXIMUM OR MINIMUM VALUES ARE NOT EXCEEDED. WORK THAT EXCEEDS THOSE VALUES WILL NOT BE ACCEPTED.
2. MAXIMUM DISTANCE BETWEEN CONTROL JOINTS 10 FT LATERALLY AND LONGITUDINALLY SPACED EQUALLY.
3. PROVIDE EXPANSION-CONTRACTION JOINTS IN CONCRETE SIDEWALK AT 30 FT INTERVALS AND WHERE CONCRETE SIDEWALK BUTTS AGAINST DRIVEWAY.
4. SIDEWALK INSIDE THE DRIVEWAY LIMITS IS PAID AS PART OF DRIVEWAY, NOT AS PART OF SIDEWALK.
5. OPEN CONCRETE DRIVEWAY
   A. RESIDENTIAL = 6 INCH THICK, COMMERCIAL = 7 INCH THICK. USE THESE THICKNESSES FOR APRON, SIDEWALK WITHIN DRIVEWAY AREA, APPROACH AND RADII.
   B. DEPRESS THE LONGITUDINAL SLOPE OF THE SIDEWALK AT A MAXIMUM RATE OF 5 PERCENT TO MEET THE APRON - APPROACH ELEVATION IF THE GRADES SHOWN ON THE SLOPE DETAIL CANNOT BE MET. THE TOP BACK OF SIDEWALK IS TO BE A MINIMUM 6 INCHES ABOVE THE FLOWLINE OF CURB AND GUTTER AT ALL TIMES.
6. USE CLASS AA(AE) CONCRETE FOR SIDEWALK AND DRIVEWAYS.
7. USE UNTREATED BASE COURSE UNDER ALL SIDEWALKS AND DRIVEWAYS.
8. QUANTITIES FOR DRIVEWAYS INCLUDE FLARES TO TOP BACK OF CURB. CURB AND GUTTER PAID SEPARATELY THROUGH DRIVEWAY LOCATIONS.
9. REMOVE EXISTING SIDEWALK AND REPLACE BACK TO NEAREST EXPANSION-CONTRACTION JOINT.
10. APPROACH IS FROM EXISTING DRIVEWAY TIE-IN TO TOP-BACK-CURB AND IS PART OF DRIVEWAY QUANTITIES.

DESIGN-ONLY NOTES:

A. DRIVEWAY DIMENSIONS (MAX.& MIN.) ARE LOCATED IN UDOT "ADMINISTRATIVE RULE R930-6 ACCOMMODATION OF UTILITIES AND THE CONTROL AND PROTECTION OF STATE HIGHWAY RIGHTS OF WAY."

REVISIONS

NO.	DATE	APPR.	REMARKS

UTAH DEPARTMENT OF TRANSPORTATION
STANDARD DRAWINGS FOR ROAD AND BRIDGE CONSTRUCTION
SALT LAKE CITY, UTAH

RECOMMENDED FOR APPROVAL — JAN. 01, 2017 DATE
CHAIRMAN STANDARDS COMMITTEE APPROVED — JAN. 01, 2017 DATE
DEPUTY DIRECTOR

CONCRETE DRIVEWAYS AND SIDEWALKS
STANDARD DRAWING TITLE

STD. DWG. NO.
GW 3B

28-NOV-2016 DGN File: L:\Standard Drawings\Imperial\2017 Approved\1-All Drawings\GW03B.dgn

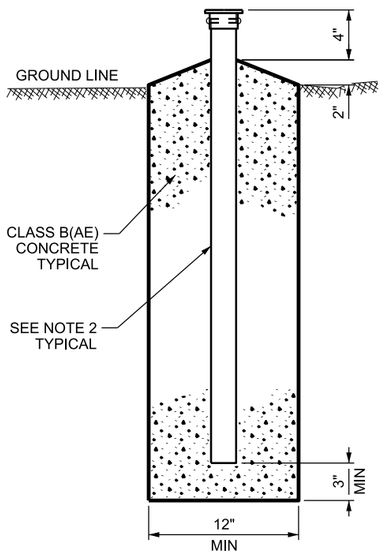

STANDARD INSTALLATION

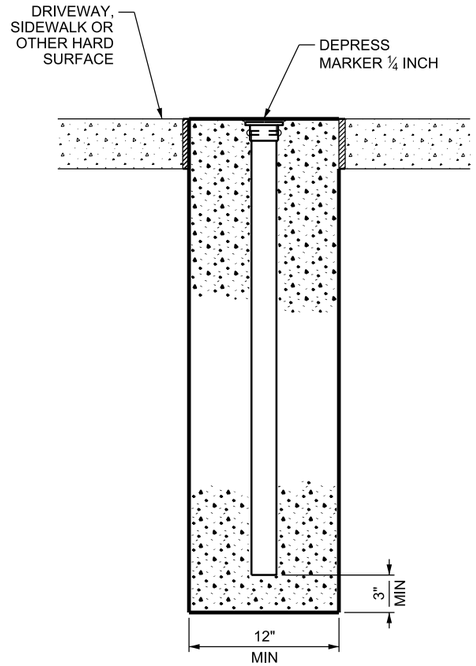

"A"

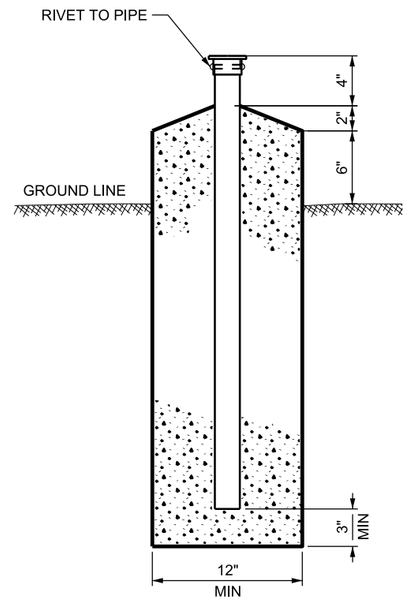

"B"

ALTERNATE INSTALLATIONS

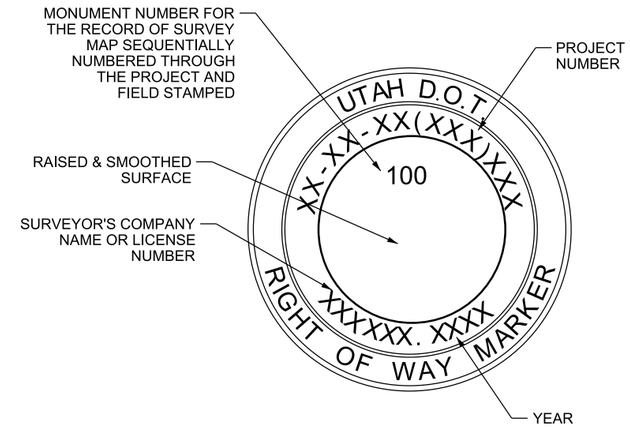

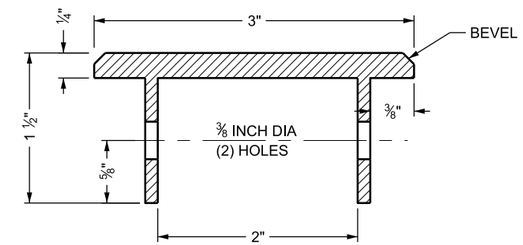

BRONZE CAP DETAIL "A"

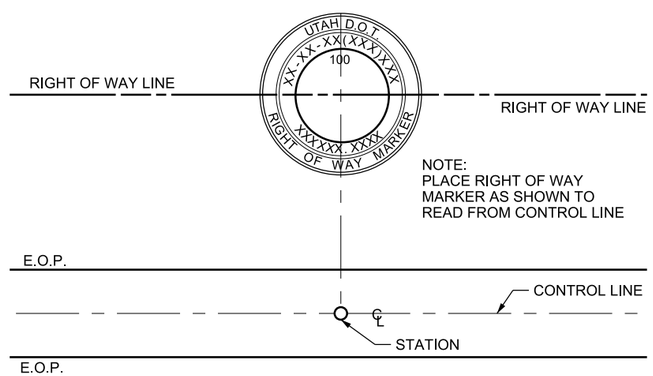

NOTES:

1. SEE STANDARD SPECIFICATION 02896.
2. USE 1 ½ INCH x 36 INCH NOM. (TYP) GALVANIZED PIPE.
3. USE RIVETS TO SECURE BRONZE CAP TO PIPE.
4. PLACE RIGHT OF WAY MARKERS AT EACH ANGLE POINT IN A RIGHT OF WAY LINE. PLACE RIGHT OF WAY MARKERS ON EACH RIGHT OF WAY LINE OPPOSITE THE PS, SC, CS, AND ST OR OPPOSITE THE PC AND PT. WHERE THE RIGHT OF WAY PARALLELS THE CENTER LINE OF THE HIGHWAY AROUND A CURVE.
5. PLACE ADDITIONAL RIGHT OF WAY MARKERS SO THAT NO INTERVAL WILL EXCEED 1000 FT. PLACE INTERMEDIATE MARKERS PREFERABLY ON SECTION LINES OR INTERSECTING PROPERTY LINES.
6. GRIND TO A SMOOTH SURFACE ALL EXPOSED SURFACES OF THE BRONZE CAP.
7. DEPRESS ALL LETTERS MINIMUM OF 1/16 INCH.
8. USE 3/16 INCH HIGH LETTERS AND NUMBERS.
9. USE ALTERNATE "A" INSTALLATION WHEN PLACING TOP OF BRONZE CAP FLUSH WITH HARD SURFACE AREA.
10. USE ALTERNATE "B" INSTALLATION WHEN PLACING MARKERS IN HEAVY BRUSH OR FOREST LANDS.
11. TABULATE RIGHT-OF-WAY MARKERS SHOWING MARKER NUMBER, STATION, OFFSET, ELEVATION, AND PROJECT COORDINATES ON THE RECORD OF SURVEY MAP.

REVISIONS

NO.	DATE	APPR.	REMARKS

UTAH DEPARTMENT OF TRANSPORTATION
STANDARD DRAWINGS FOR ROAD AND BRIDGE CONSTRUCTION
SALT LAKE CITY, UTAH

RECOMMENDED FOR APPROVAL — JAN. 01, 2017 DATE
CHAIRMAN STANDARDS COMMITTEE APPROVED — JAN. 01, 2017 DATE
DEPUTY DIRECTOR

RIGHT OF WAY MARKER
STANDARD DRAWING TITLE

STD. DWG. NO.
GW 4

DGN File: L:\Standard Drawings\Imperial\2017 Approved\1-All Drawings\GW04.dgn
28-NOV-2016

THROUGH ROAD SPEED MPH	D_A (FT)	
	$NV_CV_M \leq 4000$	$NV_CV_M > 4000$
< 55	65	200
≥ 55	65	295

THROUGH ROAD SPEED MPH	D_B(FT)		
	$\frac{V_M}{1.5N - 0.5} \leq 50$	$50 < \frac{V_M}{1.5N - 0.5} \leq 400$	$\frac{V_M}{1.5N - 0.5} > 400$
< 55	65	100	100
≥ 55	150	150	200

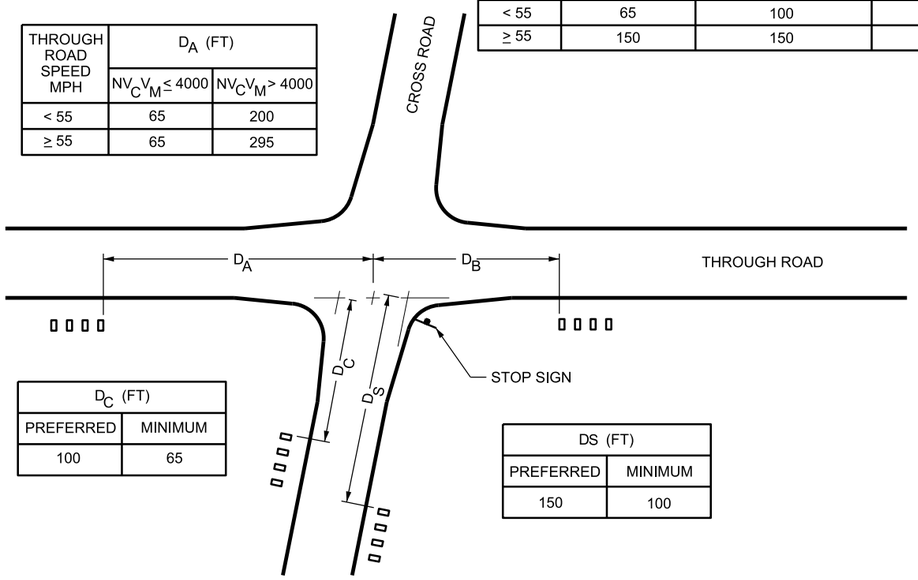

D_C (FT)	
PREFERRED	MINIMUM
100	65

DS (FT)	
PREFERRED	MINIMUM
150	100

V_C = AVERAGE DAILY TRAFFIC ON CROSS ROAD VEHICLES PER DAY

V_M = AVERAGE DAILY TRAFFIC ON THROUGH ROAD VEHICLES PER DAY

N = NUMBER OF MAILBOXES AT MAIL STOP

MINIMUM CLEARANCE DISTANCE TO NEAREST MAILBOX IN MAIL STOPS AT INTERSECTIONS

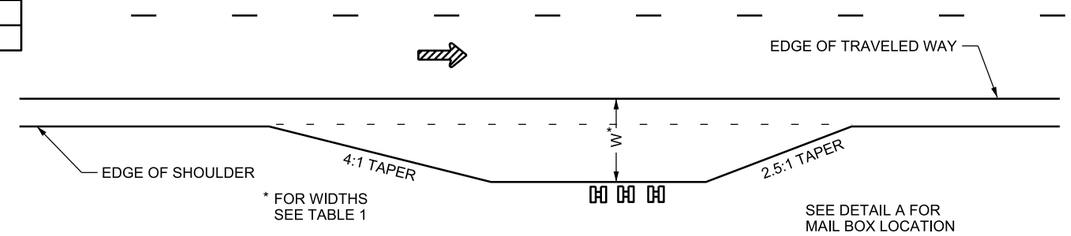

MAIL STOP LAYOUT FOR ROADS CARRYING LOW TRAFFIC SPEEDS ≤ 40 MPH OR FOR LOCAL AND COLLECTOR ROADS CARRYING ≤ 400 ADT

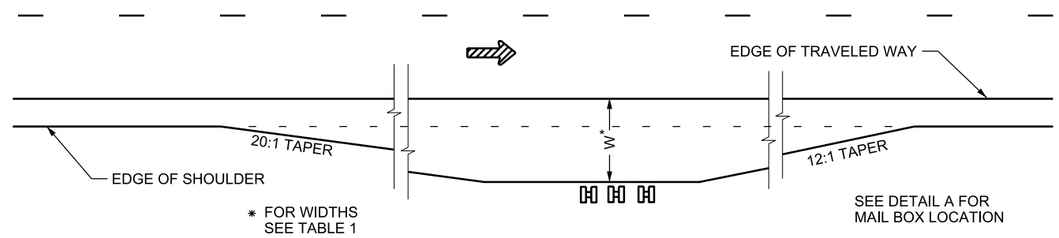

MAIL STOP LAYOUT FOR ROADS CARRYING HIGH SPEED TRAFFIC > 40 MPH

TABLE 1

HIGHWAY TYPE AND TRAFFIC CONDITIONS	WIDTH(W) OF ALL-WEATHER SURFACE OF TURNOUT OR AVAILABLE SHOULDER AT MAILBOX - FT		DISTANCE ROADSIDE FACE OF MAILBOX IS TO BE OFFSET BEHIND EDGE OF TURNOUT OR USABLE SHOULDER - INCHES	
	PREFERRED	MINIMUM	PREFERRED	MINIMUM
RURAL HIGHWAY ADT OVER 10,000	> 12	8	8 TO 12	0
RURAL HIGHWAY ADT = 1,500 TO 10,000	12	8		
RURAL HIGHWAY ADT = 100 TO 1500	10	8		
RURAL ROAD ADT UNDER 100	8	6		
RURAL ROAD ADT UNDER 50 SPEED = 40 MPH OR LESS	6	2		
RESIDENTIAL STREET WITHOUT CURB OR ALL-WEATHER SHOULDER	2	0		* *
CURBED RESIDENTIAL STREET	NOT APPLICABLE		8 TO 12 BEHIND TRAFFIC FACE OF CURB	6 BEHIND TRAFFIC FACE OF CURB

ADT = AVERAGE DAILY TRAFFIC

* * THIS MAY BE REDUCED TO ZERO, IF A TURN OUT IS PROVIDED.

LATERAL PLACEMENT OF MAILBOXES

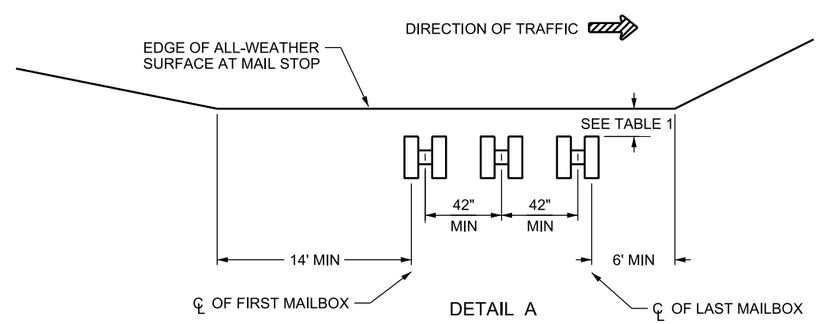

MAILBOX LOCATION AT MAIL STOP

REVISIONS

NO.	DATE	APPR.	REMARKS

UTAH DEPARTMENT OF TRANSPORTATION
STANDARD DRAWINGS FOR ROAD AND BRIDGE CONSTRUCTION
SALT LAKE CITY, UTAH

RECOMMENDED FOR APPROVAL — JAN. 01, 2017 DATE

CHAIRMAN STANDARDS COMMITTEE APPROVED — JAN. 01, 2017 DATE

DEPUTY DIRECTOR

NEWSPAPER AND MAILBOX STOP LAYOUT

STANDARD DRAWING TITLE

STD. DWG. NO.

GW 5A

DGN File: L:\Standard Drawings\Imperial\2017 Approved\1-All Drawings\GW05A.dgn

28-NOV-2016

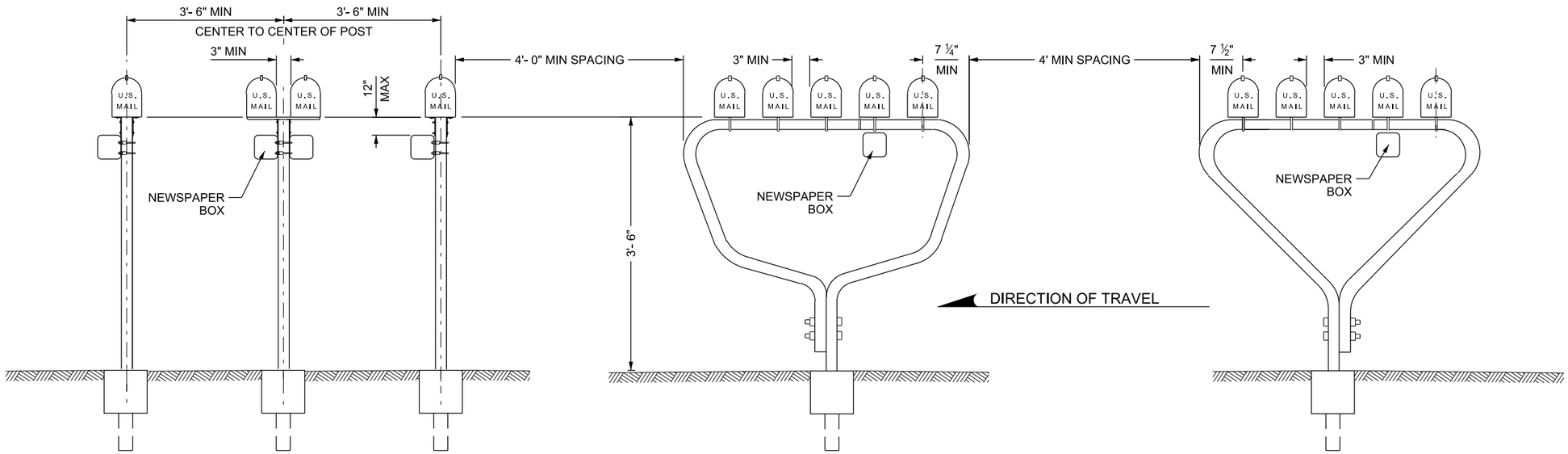

TYPE A SINGLE POST
(S SQUARE AND TAPCO)
SEE NOTE 10

TYPE B FORMED TUBE FRAME
(TAPCO MAILBOX SYSTEM)
SEE NOTE 10

TYPE B FORMED TUBE FRAME
(S SQUARE MAILBOX SYSTEM)
SEE NOTE 10

SINGLE AND MULTIPLE MAILBOX ASSEMBLIES

MAILBOX PLACEMENT DIMENSIONS

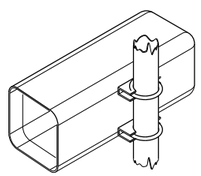

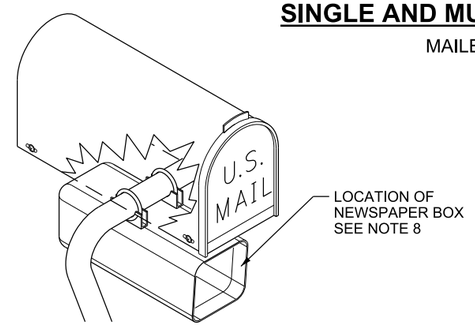

NEWSPAPER BOX TYPE A

NEWSPAPER BOX TYPE B

ONLY INSTALL NEWSPAPER BOX IF REQUESTED BY PROPERTY OWNER.

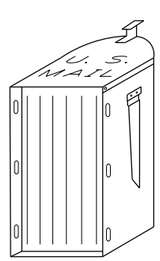

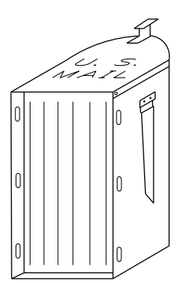

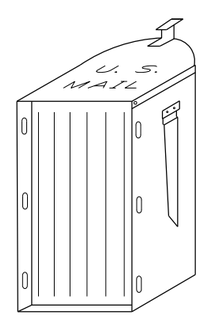

SIZE NO. 1 MAILBOX

(19 INCH x 6 ½ INCH x 8 ½ INCH)

SIZE NO. 2 MAILBOX

(21 INCH x 8 INCH x 10 ½ INCH)

SIZE NO. 3 MAILBOX

(23 ½ INCH x 11 ½ INCH x 13 ½ INCH)

APPROXIMATE MAILBOX SIZES

SEE NOTE 6
USE SIZE 1 MAILBOX UNLESS PROPERTY OWNER REQUESTS A LARGER MAILBOX.

GENERAL NOTES

1. MAILBOX BASES AND SUPPORTS ARE DEFINED AS FOLLOWS:
   TYPE "A": SINGLE POST WITH BASE FOR THE MOUNTING OF A SINGLE OR DOUBLE MAILBOX WITH OR WITHOUT NEWPAPER BOX.
   TYPE "B": A SINGLE POINT FORMED MOUNTING TUBE WITH BASE FOR THE MOUNTING OF THREE TO FIVE MAILBOXES WITH OR WITHOUT NEWSPAPER BOXES.
2. INSTALLATION AS PER MANUFACTURER'S REQUIREMENTS.
3. USE ONE OF THE APPROVED MOUNTING BASES, POSTS, AND HARDWARE:
   S SQUARE: NEX MAILBOX SUPPORT SYSTEM.
   TAPCO: V-LOC MAILBOX SYSTEM.
   USE OF ALTERNATE SYSTEMS MEETING NCHRP-350 REQUIREMENTS ALLOWED.
4. CALL ENGINEER FOR APPROVED CANTILEVERED SUPPORT IF CANTILEVERED MAILBOX SUPPORT IS NEEDED.
5. GALVANIZE ALL HARDWARE INCLUDING SUPPORTS, LOCKING WEDGES, BOLTS, NUTS, WASHERS, AND OTHER MISCELLANEOUS HARDWARE IN ACCORDANCE WITH STANDARD SPECIFICATION 01891.
6. USE ANY COMMERCIALLY AVAILABLE MAILBOX MEETING POST OFFICE REQUIREMENTS AND DETAILS ON THIS DRAWING.
7. MOUNT NO MORE THAN TWO MAILBOXES AND TWO NEWSPAPER BOXES USING TYPE "A" POST. MOUNT NEWSPAPER BOX UNDER MAILBOX AND DIRECTLY TO SUPPORT TYPE "A." MOUNT NO MORE THAN FIVE MAILBOXES AND FIVE NEWSPAPER BOXES ON TYPE "B" FRAME.
8. DO NOT EXTEND NEWSPAPER BOXES BEYOND THE FRONT OF THE MAILBOX WHEN THE MAILBOX DOOR IS CLOSED.
9. USE 2 INCH OR 2 ¼ INCH DIAMETER U-CLAMPS WITH ⅜ INCH DIAMETER THREADED BOLT END INCLUDING FLAT WASHERS, LOCK WASHERS, HEX NUTS, AND APPROPRIATE U-CLAMP SADDLE FOR ALL DEPICTED U-CLAMPS OR SOMETHING SIMILAR.
10. SEE SN SERIES STD DWGS FOR APPROVED BASE DETAILS.

REVISIONS

NO.	DATE	APPR.	REMARKS

UTAH DEPARTMENT OF TRANSPORTATION
STANDARD DRAWINGS FOR ROAD AND BRIDGE CONSTRUCTION
SALT LAKE CITY, UTAH

RECOMMENDED FOR APPROVAL — JAN. 01, 2017 DATE
CHAIRMAN STANDARDS COMMITTEE APPROVED — JAN. 01, 2017 DATE
DEPUTY DIRECTOR

NEWSPAPER AND MAILBOX SUPPORTS
STANDARD DRAWING TITLE

STD. DWG. NO.
GW 5B

DGN File:L:\Standard_Drawings\Imperial\2017 Approved\1-All Drawings\GW05B.dgn
28-NOV-2016

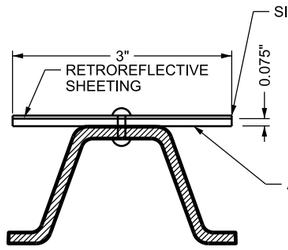

PREFERRED DELINEATOR INSTALLATION

SEE NOTE 3

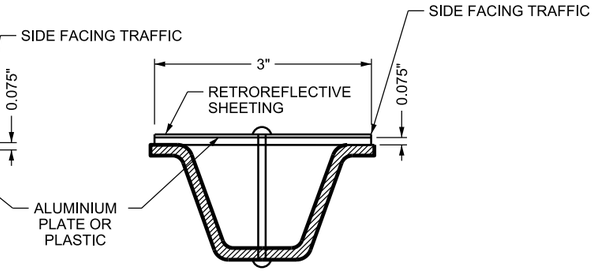

OPTIONAL DELINEATOR INSTALLATION

SEE NOTE 3

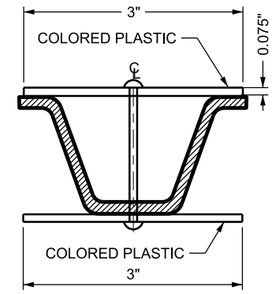

CULVERT/MAINTENANCE MARKER INSTALLATION

FOR 2 LB/FT POST WITH COLORED PLASTIC ATTACHED. SEE NOTE 2

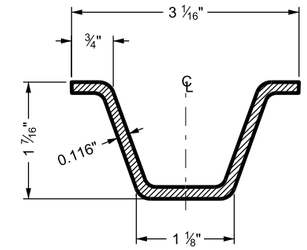

CROSS SECTION

FOR 2 LB/FT POST

BARRIER REFLECTORS

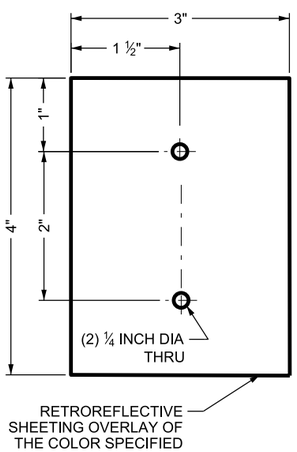

DELINEATOR PLATE

SEE NOTE 3

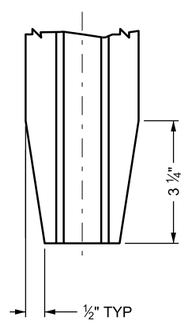

POST TAPER DETAIL

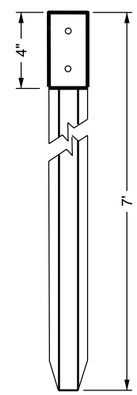

TYPE I

SINGLE UNIT
SEE NOTE 1

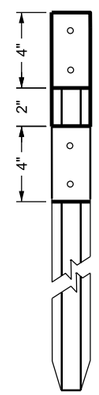

TYPE II

DOUBLE UNIT
SEE NOTES 1, 5

DELINEATORS

(OF COLOR SPECIFIED)

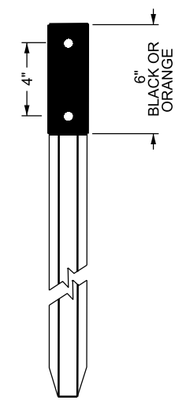

MAINTENANCE/CULVERT MARKER

SEE NOTE 2

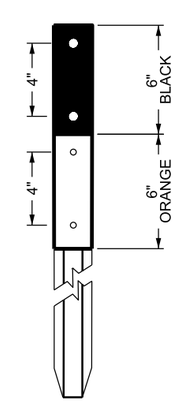

MAINTENANCE/CULVERT MARKER

SEE NOTE 2

NOTES:

1. USE GALVANIZED STEEL POSTS FABRICATED WITH 5/16 INCH HOLES ON 1 INCH SPACING OR FLEXIBLE DELINEATORS AS SPECIFIED IN STANDARD SPECIFICATION 02842. PUNCH HOLES ON THE CENTERLINE OF THE POST. PLACE TOP HOLE 1 INCH FROM THE TOP OF POST. PUNCH HOLES THE FULL LENGTH OF THE POST.
2. ATTACH 3 X 6 X 1/10 INCH COLORED PLASTIC OF THE COLOR SPECIFIED ON CULVERT AND MAINTENANCE MARKERS.
   A. USE BLACK FOR CULVERT MARKERS.
   B. USE ORANGE FOR MAINTENANCE MARKERS.
   C. USE BLACK ABOVE ORANGE WHEN BOTH MARKERS (MAINTENANCE AND CULVERT) ARE REQUIRED ON ONE DELINEATOR.
3. INSTALL DELINEATOR PLATE ON THE SIDE OF THE POST FACING TRAFFIC. PREFERRED ORIENTATION OF POST TO ONCOMING TRAFFIC IS AS SHOWN. HOWEVER, EXISTING POST WITH THE OPPOSITE ORIENTATION IS ACCEPTABLE. INSTALL WITH TWO 1/4 INCH DIAMETER EXPANSION RIVETS. INSTALL ON OPPOSITE SIDE WITH TWO 1/4 INCH POP RIVETS WITH BACKING WASHERS.
4. REFER TO SN SERIES STD DWGS FOR FREEWAY CROSSOVER DELINEATION MARKINGS AND HARDWARE.
5. USE TYPE II DELINEATORS ON ENTRANCE AND EXIT RAMPS ONLY.

NO.	DATE	APPR.	REMARKS

REVISIONS

UTAH DEPARTMENT OF TRANSPORTATION
STANDARD DRAWINGS FOR ROAD AND BRIDGE CONSTRUCTION
SALT LAKE CITY, UTAH

RECOMMENDED FOR APPROVAL — JAN. 01, 2017 DATE
CHAIRMAN STANDARDS COMMITTEE APPROVED — JAN. 01, 2017 DATE
DEPUTY DIRECTOR

DELINEATION HARDWARE

STANDARD DRAWING TITLE

STD. DWG. NO.
GW 6A

DGN File: L:\Standard Drawings\Imperial\2017 Approved\1-All Drawings\GW06A.dgn
28-NOV-2016

BARRIER REFLECTORS

SEE NOTES 3, 4, 5, 6 AND 7

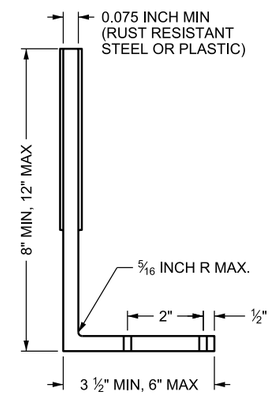

"L" REFLECTOR

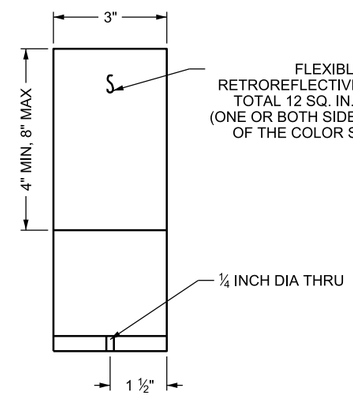

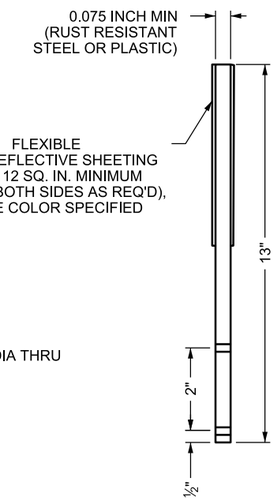

STRAIGHT REFLECTOR

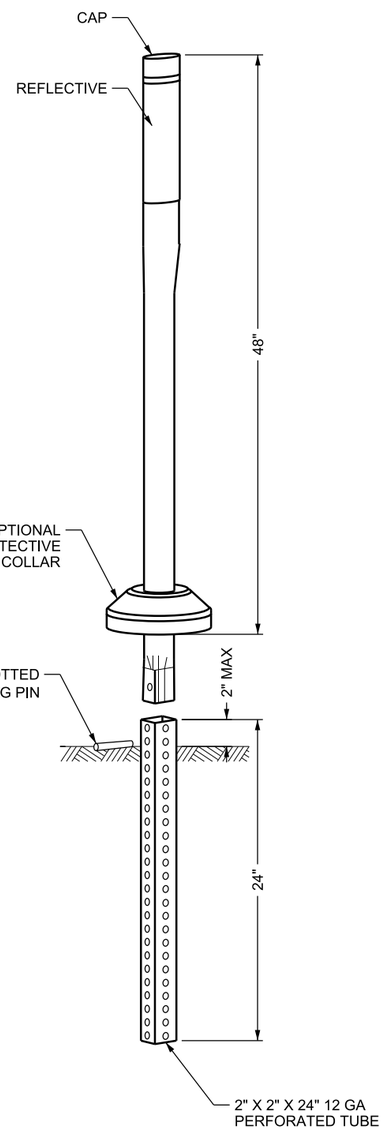

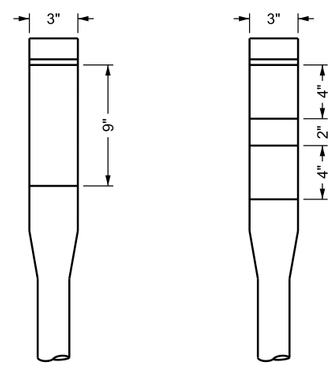

TYPE I **TYPE II**

FLEXIBLE DELINEATOR POSTS

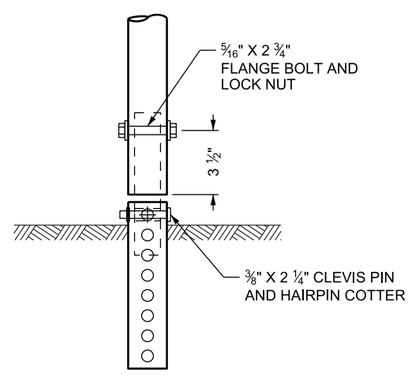

OPTIONAL BASE FOR FLEXIBLE POSTS

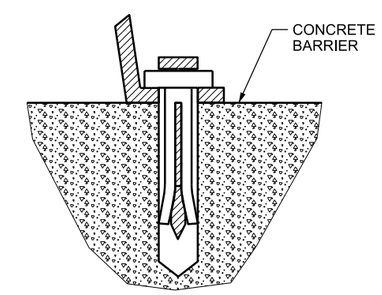

METAL HIT ANCHORS

SEE NOTE 3

NOTES:

1. MATCH FLEXIBLE DELINEATOR POST COLOR TO THE ADJACENT PAVEMENT MARKING LINE COLOR.
2. INSTALL FLEXIBLE DELINEATOR REFLECTOR ON THE SIDE OF THE POST FACING TRAFFIC.
3. MOUNT BARRIER REFLECTORS ON CONCRETE AND BRIDGE PARAPETS WITH TWO ¼ x ¼ INCH METAL HIT ANCHORS WITH NON-METALLIC WASHERS.
4. MOUNT BARRIER REFLECTORS ON CONCRETE BARRIER AS SHOWN ON STD DWG BA 1B.
5. MOUNT STRAIGHT REFLECTORS ON WOOD POSTS WITH TWO 2 ½ INCH ELECTRO GALVANIZED RING SHANK NAILS WITH NEOPRENE WASHERS.
6. MOUNT STRAIGHT REFLECTORS ON STEEL POSTS WITH TWO ¼ x ¾ INCH BOLTS AND SELF LOCKING NUTS.
7. MOUNT BARRIER REFLECTORS ON GUARDRAIL POSTS AS SHOWN ON STD DWG BA 4A.

REVISIONS

NO.	DATE	APPR.	REMARKS

UTAH DEPARTMENT OF TRANSPORTATION
STANDARD DRAWINGS FOR ROAD AND BRIDGE CONSTRUCTION
SALT LAKE CITY, UTAH

RECOMMENDED FOR APPROVAL — JAN. 01, 2017 DATE
CHAIRMAN STANDARDS COMMITTEE APPROVED — JAN. 01, 2017 DATE
DEPUTY DIRECTOR

BARRIER AND FLEXIBLE DELINEATION HARDWARE

STANDARD DRAWING TITLE

STD. DWG. NO.
GW 6B

DGN File:L:\Standard Drawings\Imperial\2017 Approved\1-All Drawings\GW06B.dgn
28-NOV-2016

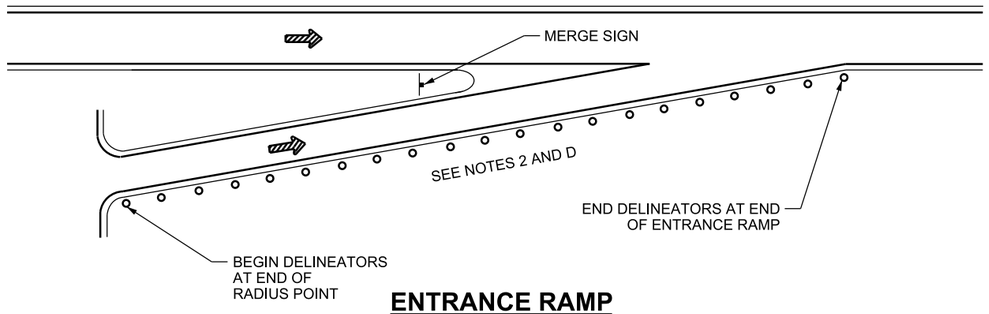

ENTRANCE RAMP

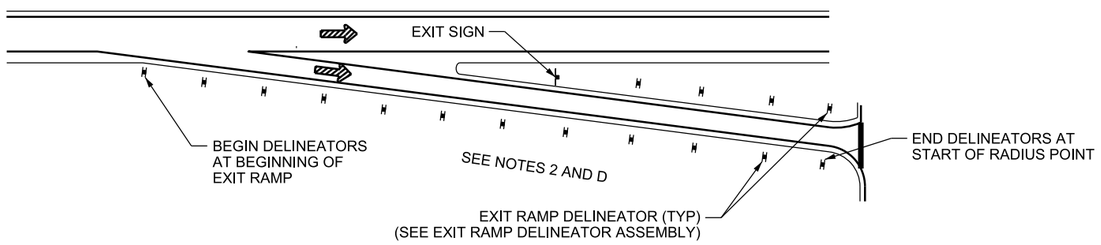

EXIT RAMP

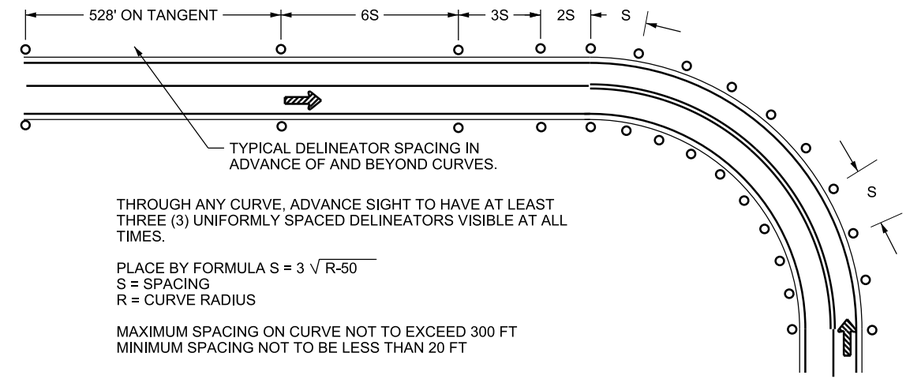

THROUGH ANY CURVE, ADVANCE SIGHT TO HAVE AT LEAST THREE (3) UNIFORMLY SPACED DELINEATORS VISIBLE AT ALL TIMES.

PLACE BY FORMULA $S = 3\sqrt{R-50}$
S = SPACING
R = CURVE RADIUS

MAXIMUM SPACING ON CURVE NOT TO EXCEED 300 FT
MINIMUM SPACING NOT TO BE LESS THAN 20 FT

DELINEATOR SPACING FORMULA

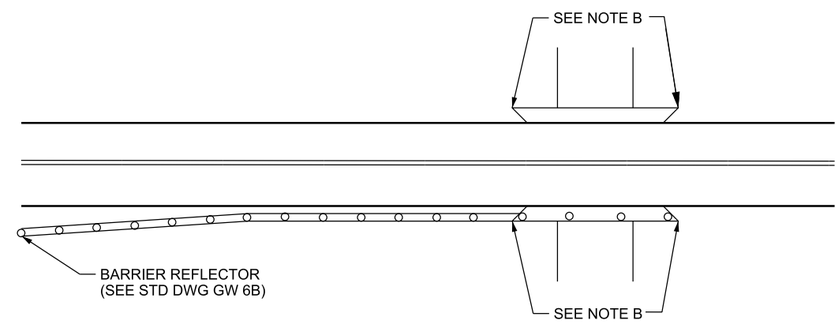

BARRIER REFLECTOR DETAIL

(SEE NOTE A)

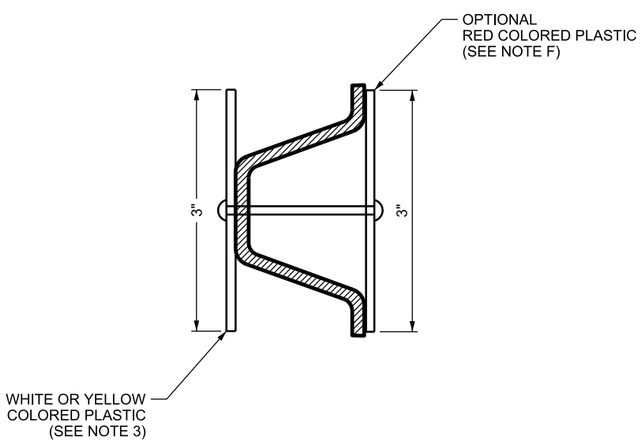

EXIT RAMP DELINEATOR ASSEMBLY

USE FOR 2 LB/FT POST WITH COLORED PLASTIC ATTACHED

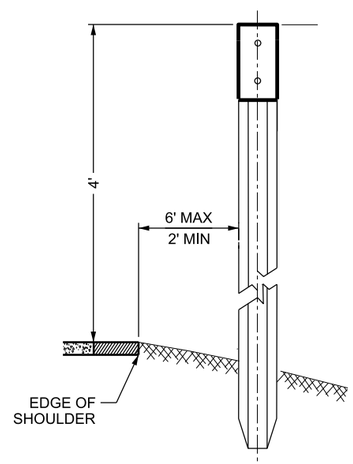

DELINEATOR

NOTES:

1. BARRIERS ARE DEFINED AS BEING GUARDRAIL, CONCRETE BARRIER, AND BRIDGE PARAPET WALL.
2. USE CONSISTENT MOUNTING HEIGHT AT EACH LOCATION.
3. MATCH REFLECTOR COLOR TO THE ADJACENT PAVEMENT MARKING LINE COLOR. INSTALL THE YELLOW OR WHITE REFLECTORS ON POSTS TO FACE TRAFFIC.

DESIGN-ONLY NOTES:

A. SPACE BARRIER REFLECTORS A MAXIMUM 100 FT IN PERMANENT APPLICATIONS AND 50 FT FOR TEMPORARY APPLICATIONS. REFLECTOR COLOR TO MATCH THE ADJACENT PAVEMENT MARKING LINE.

B. INSTALL APPROPRIATE OBJECT MARKER OM3-R (OR L OR C) IN PLACE OF DELINEATOR AT LEADING EDGE OF BRIDGE PARAPET OR HEADWALL IF GUARDRAIL IS NOT PRESENT.

C. CHEVRON ALIGNMENT (W1-8) SIGNS MAY BE USED WHEN ADDITIONAL EMPHASIS AND GUIDANCE FOR A CHANGE IN HORIZONTAL ALIGNMENT IS NEEDED. THE W1-8 SIGN MAY BE USED TO SUPPLEMENT STANDARD DELINEATORS ON CURVES. THE W1-8 SIGN MAY BE USED TO SUPPLEMENT OR AS AN ALTERNATE TO THE LARGE ARROW (W1-6) SIGN. SEE STD DWG SN 7 FOR CHEVRON ALIGNMENT SIGN DETAILS.

D. SPACE TYPE II DELINEATORS AT 300 FT ON TANGENTS ALONG ALL ENTRANCE AND EXIT RAMPS AS SHOWN. USE DELINEATOR SPACING FORMULA FOR ALL RAMP CURVES.

E. USE DELINEATORS ON THE LEFT SIDE OF ENTRANCE AND EXIT RAMPS FOR RIGHT HAND CURVES UPON APPROVAL OF THE REGION TRAFFIC ENGINEER.

F. RED REFLECTORS MAY BE INSTALLED ON BACK SIDES OF DELINEATOR POSTS IN AREAS WHERE WRONG WAY DRIVERS ARE OF CONCERN.

NO.	DATE	APPR.	REMARKS

REVISIONS

UTAH DEPARTMENT OF TRANSPORTATION
STANDARD DRAWINGS FOR ROAD AND BRIDGE CONSTRUCTION
SALT LAKE CITY, UTAH

RECOMMENDED FOR APPROVAL — JAN. 01, 2017 DATE
CHAIRMAN STANDARDS COMMITTEE APPROVED — JAN. 01, 2017 DATE
DEPUTY DIRECTOR

DELINEATION APPLICATION

STANDARD DRAWING TITLE

STD. DWG. NO.
GW 7A

DGN File: L:\Standard Drawings\Imperial\2017 Approved\1-All Drawings\GW07A.dgn
28-NOV-2016

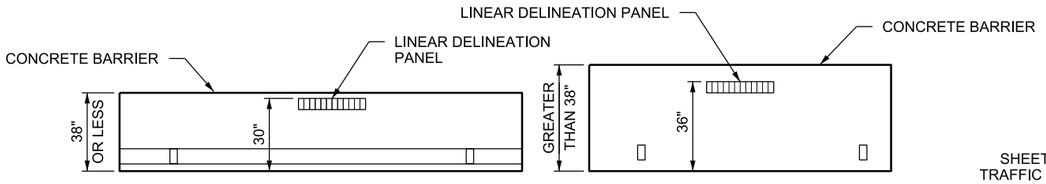

LINEAR DELINEATION PANEL PLACEMENT ON CONCRETE BARRIER DETAIL

SEE NOTE 6

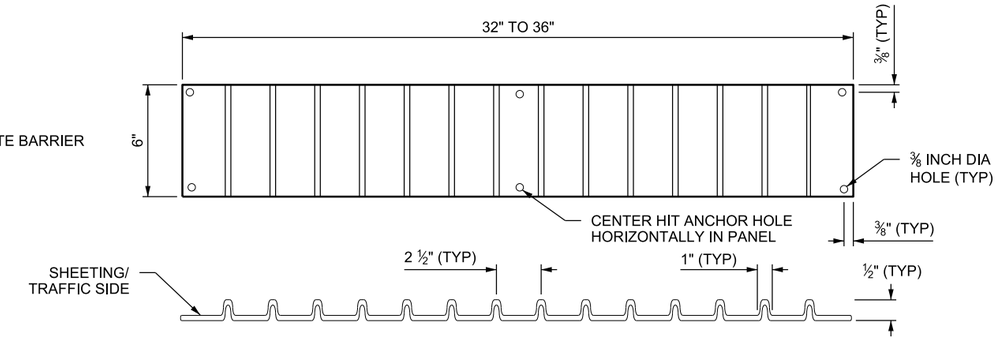

LINEAR DELINEATION PANEL (TYP)

SEE NOTES 1, 2, AND 3

TABLE 1

LINEAR DELINEATION PANEL CURVE SPACING TABLE	
DIFFERENTIAL BETWEEN POSTED SPEED AND ADVISORY SPEED	TYPICAL DISTANCE FOR EVENLY SPACED PANELS (S)
5 MPH OR LESS	100 FT
10 MPH	80 FT
15 MPH	60 FT
20 MPH	40 FT
25 MPH OR GREATER	20 FT

LINEAR DELINEATION PANEL SPACING

SEE NOTES C AND D

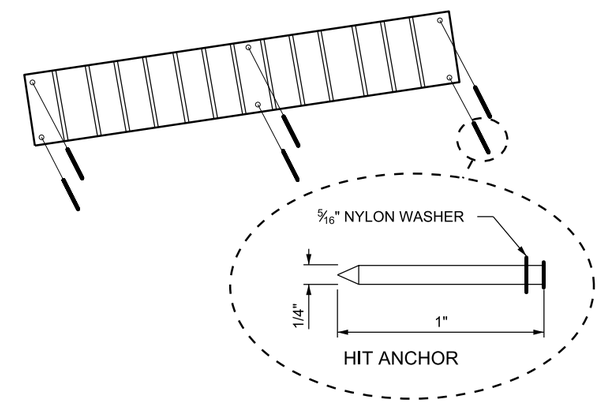

HIT ANCHOR DETAIL

SEE NOTES 4 AND 5

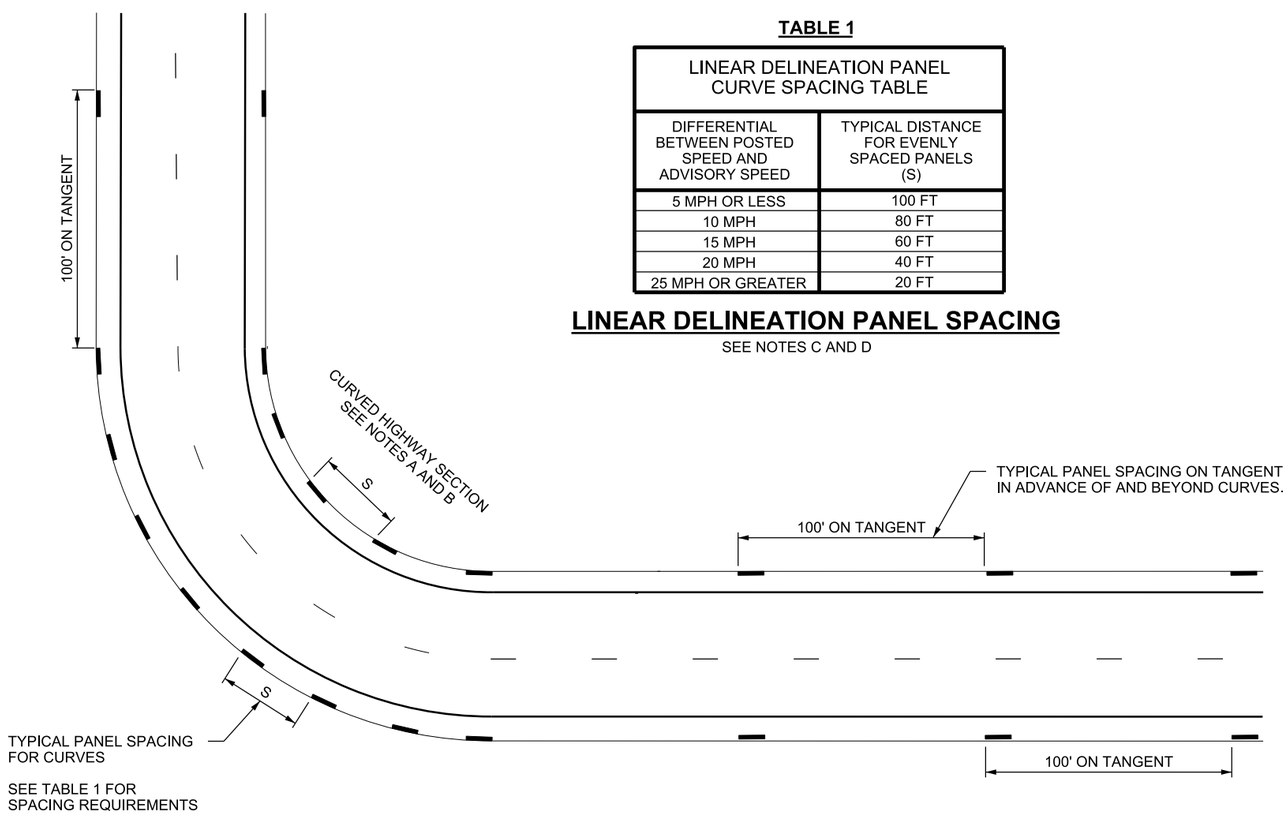

LINEAR DELINEATION PANEL SPACING DETAIL

NOTES:

1. USE PANELS OF THE SAME COLOR AS THE EDGE LINE.
2. USE RETROREFLECTIVE SHEETING MEETING THE REQUIREMENTS OF STANDARD SPECIFICATION 02890.
3. USE ALUMINUM SUBSTRATE.
4. PRE-DRILL SIX, ¼ INCH x 1 INCH HOLES IN THE BARRIER.
5. USE ¼ INCH x 1 INCH STAINLESS STEEL HIT ANCHORS WITH 5/16 INCH NYLON WASHERS TO SECURE PANEL TO BARRIER.
6. MAY BE USED ON EITHER PRECAST OR CAST-IN-PLACE CONCRETE BARRIER.

DESIGN-ONLY NOTES:

A. BEGIN REDUCED PANEL SPACING AT START OF CURVE IN THE DIRECTION OF TRAVEL.

B. END PANELS AT THE END OF THE CURVE IN THE DIRECTION OF TRAVEL, OR AT THE LOCATION DETERMINED BY THE REGION TRAFFIC ENGINEER.

C. SPACE PANELS AS FOLLOWS:
   A. USE MAXIMUM SPACING OF 100 FT ON TANGENTS AND CURVES.
   B. USE MINIMUM SPACING OF 20 FT ON CURVES.

D. SPACING MAY BE ADJUSTED BETWEEN THE MAXIMUM AND THE MINIMUM SPACING REQUIREMENTS AT THE DIRECTION OF THE REGION TRAFFIC ENGINEER.

REVISIONS

NO.	DATE	APPR.	REMARKS

UTAH DEPARTMENT OF TRANSPORTATION
STANDARD DRAWINGS FOR ROAD AND BRIDGE CONSTRUCTION
SALT LAKE CITY, UTAH

RECOMMENDED FOR APPROVAL — JAN. 01, 2017 DATE
CHAIRMAN STANDARDS COMMITTEE APPROVED — JAN. 01, 2017 DATE
DEPUTY DIRECTOR

LINEAR DELINEATION PANEL AND INSTALLATION DETAILS
STANDARD DRAWING TITLE

STD. DWG. NO.
GW 7B

DGN File:L:\Standard Drawings\Imperial\2017 Approved\1-All Drawings\GW07B.dgn
28-NOV-2016

SLOPE TABLE

	ITEM	MAX. RUNNING SLOPE *	MAX. CROSS SLOPE *
Ⓣ	TURNING SPACE	2%	2% (d)
Ⓡ	RAMP	8.3% (a) 5.1% MIN	2% (d)
Ⓑ	BLENDED TRANSITION	5%	2% (d)
Ⓒ	CLEAR SPACE/GUTTER	5% (b)	2% (d)
Ⓢ	SIDEWALK	–	2%
Ⓕ1	FLARE WITHIN SIDEWALK	10% (c)	--
Ⓕ2	FLARE NOT IN SIDEWALK	25% (c)	--
	CROSSWALK	5%	2% (e) (f)

* RUNNING SLOPE IS IN THE DIRECTION OF PEDESTRIAN TRAVEL.
CROSS SLOPE IS PERPENDICULAR TO PEDESTRIAN TRAVEL.
** SEE CLEAR SPACE/GUTTER DETAIL C

(a) LENGTH OF RUNNING SLOPE FOR RAMPS IS NOT REQUIRED TO EXCEED 15 FT.

(b) MAINTAIN CONSISTENCY OF CLEAR SPACE RUNNING SLOPE ACROSS ENTIRE CURB CUT. WARP GUTTER PAN TO MEET REQUIRED CLEAR SPACE SLOPE AT CURB CUT.

(c) MEASURE FLARE SLOPE PARALLEL TO CURB LINE.

(d) DO NOT EXCEED THE ROADWAY PROFILE GRADE FOR THE CROSS SLOPE AT CROSSWALKS WITHOUT A STOP OR YIELD SIGN AND AT MID-BLOCK CROSWALKS.

(e) DO NOT EXCEED 5 PERCENT CROSS SLOPE AT CROSSWALKS AT INTERSECTIONS WITHOUT A STOP OR YIELD SIGN.

(f) DO NOT EXCEED A CROSS SLOPE EQUAL TO THE STREET OR HIGHWAY GRADE AT MID-BLOCK CROSSWALKS.

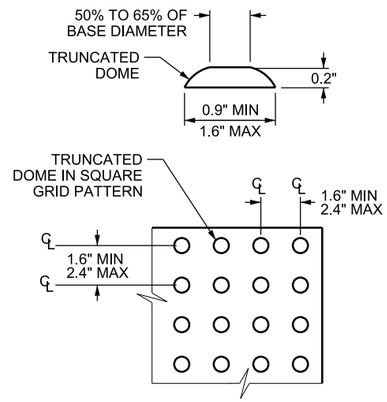

DETECTABLE WARNING SURFACE DETAIL A

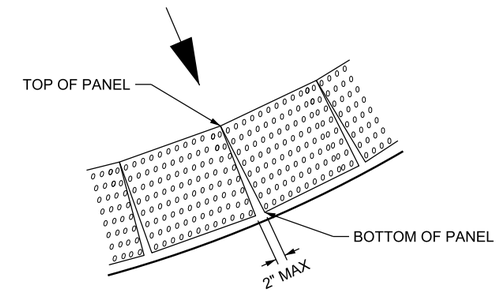

DETECTABLE WARNING SURFACE PANEL GAP DETAIL B

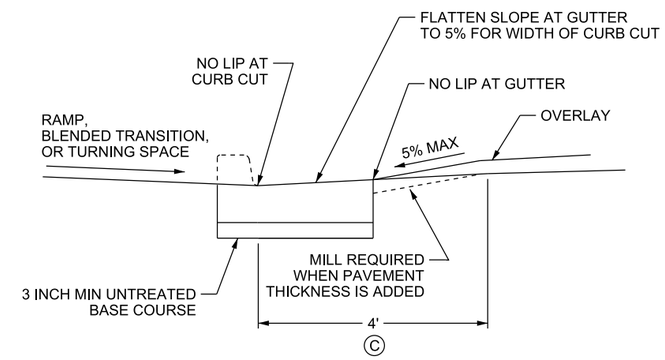

CLEAR SPACE/GUTTER DETAIL C

GENERAL NOTES APPLICABLE TO THE GW 5 SERIES:

1. DIMENSIONS SHOWN IN THE SLOPE TABLE ARE NOT SUBJECT TO CONVENTIONAL INDUSTRY TOLERANCES. CONSTRUCT SIDEWALKS AND RAMPS SUCH THAT THE MAXIMUM OR MINIMUM VALUES ARE NOT EXCEEDED. WORK THAT EXCEEDS THOSE VALUES WILL NOT BE ACCEPTED.
2. SITE CONDITIONS WILL VARY. CONFIGURATION OF RAMP, BLENDED TRANSITION, TURNING SPACE, AND CLEAR SPACE MAY BE CHANGED, BUT THEY MUST MEET DIMENSIONS AND SLOPES SHOWN HERE. THE USE OF ITEMS SUCH AS FLARES AND CURBWALLS ARE AT THE DISCRETION OF THE ENGINEER.
3. PERPENDICULAR AND PARALLEL RAMPS SHOWN ON STD DWG GW 5B AND THE COMBINATION ACCESS NEXT TO GUTTER DETAIL SHOWN ON STD DWG GW 5D ARE ACCEPTABLE FOR USE AT MID-BLOCK OR CORNER INSTALLATIONS. REFER TO BLENDED TRANSITION DETAIL ON STD DWG GW 5B AND STD DWGS GW 5C AND GW 5D FOR OTHER EXAMPLES OF CORNER INSTALLATIONS.
4. RAMP GRADE BREAK MUST BE PERPENDICULAR TO THE RUNNING SLOPE.
5. TURNING SPACE WIDTH: USE THE LARGER OF THE CURB CUT WIDTH OR A 4 FT MINIMUM WIDTH X 4 FT MINIMUM DEPTH.
6. TURNING SPACE DEPTH: USE A 4 FT MINIMUM DEPTH WHEN THE TURNING SPACE IS UNCONSTRAINED. USE A 5 FT MINIMUM DEPTH WHEN THE TURNING SPACE IS CONSTRAINED. THE TURNING SPACE IS CONSTRAINED WHEN THERE IS A BARRIER SUCH AS A CURB ON THE REAR OF A PERPENDICULAR RAMP OR ON 2 OR MORE OF THE SIDES OF A PARALLEL RAMP.
7. CONSTRUCT BLENDED TRANSITIONS WITHOUT A TURNING SPACE ONLY WHEN TECHNICAL INFEASIBILITY PREVENTS THE INSTALLATION OF A TURNING SPACE.
8. LOCATE CURB CUT WITHIN CROSSWALK.
9. USE A 8 FT MINIMUM CURB CUT FOR BI-DIRECTIONAL CROSSWALKS. USE A 4 FT MINIMUM CURB CUT UPON APPROVAL OF THE REGION TRAFFIC OPERATIONS ENGINEER.
10. PROVIDE DETECTABLE WARNING SURFACE ACCORDING TO MANUFACTURER'S RECOMMENDATIONS FOR FULL WIDTH OF CURB CUT AND 2 FT MINIMUM IN THE DIRECTION OF PEDESTRIAN TRAVEL. SEE DETECTABLE WARNING SURFACE DETAIL A FOR DIMENSIONS.
11. LOCATE DETECTABLE WARNING SURFACE SO THE OUTSIDE CORNER NEAREST THE STREET IS WITHIN 1 INCH OF THE BACK OF CURB.
12. PLACE DETECTABLE WARNING SURFACE PANELS ON A RADIUS IN A STRAIGHT LINE OR ACCORDING TO DETAIL B. TOP CORNERS OF ADJACENT PANELS TO TOUCH, BOTTOM CORNERS OF ADJACENT PANELS TO HAVE A 2 INCHES MAXIMUM GAP.
13. GRIND OFF REMAINING PORTION OF ANY CUT DOMES WHEN DETECTABLE WARNING SURFACE IS CUT. SEAL ALL CUT PANEL EDGES TO PREVENT WATER DAMAGE.
14. PROVIDE DETECTABLE WARNING SURFACE COLOR THAT CONTRASTS WITH ADJACENT WALKING SURFACE, GUTTER, STREET, AND PEDESTRIAN ACCESS ROUTE, EITHER LIGHT-ON-DARK OR DARK-ON-LIGHT.
15. CLEAR SPACE SIZE: USE A 4 FT MINIMUM DEPTH AND THE LARGER OF THE CURB CUT WIDTH OR A 4 FT MINIMUM WIDTH.
16. USE CLASS AA(AE) CONCRETE.
17. USE UNTREATED BASE COURSE UNDER ALL CONCRETE FLATWORK.
18. REFER TO STD DWG SL 7 FOR DISTANCE TO PEDESTRIAN SIGNAL BUTTON.
19. PLACE A R9-3 NO PEDESTRIAN SIGN AT BOTH ENDS OF THE CROSSWALK WHEN PEDESTRIANS ARE PROHIBITED FROM CROSSING AN UNMARKED CROSSWALK AT AN INTERSECTION.

NO.	DATE	APPR.	REMARKS

REVISIONS

UTAH DEPARTMENT OF TRANSPORTATION
STANDARD DRAWINGS FOR ROAD AND BRIDGE CONSTRUCTION
SALT LAKE CITY, UTAH

RECOMMENDED FOR APPROVAL — JAN. 01, 2017 DATE
CHAIRMAN STANDARDS COMMITTEE APPROVED — JAN. 01, 2017 DATE
DEPUTY DIRECTOR

PEDESTRIAN ACCESS
STANDARD DRAWING TITLE

STD. DWG. NO.
PA 1

DGN File:L:\Standard Drawings\Imperial\2017 Approved\1-All Drawings\PA01.dgn
28-NOV-2016

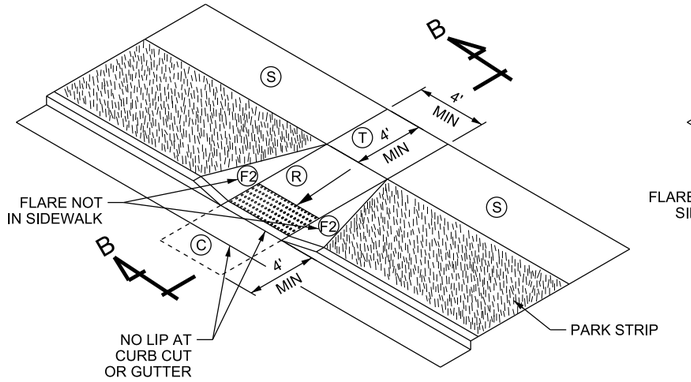

PERPENDICULAR RAMP NOT WITHIN SIDEWALK

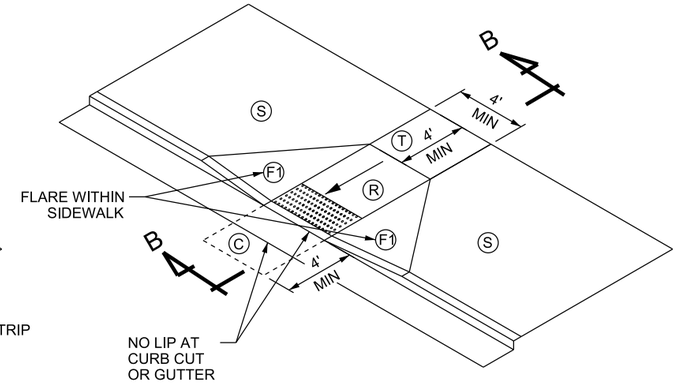

PERPENDICULAR RAMP WITHIN SIDEWALK

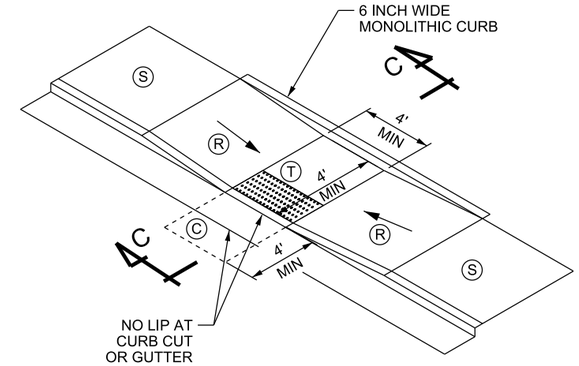

PARALLEL RAMP WITHIN SIDEWALK

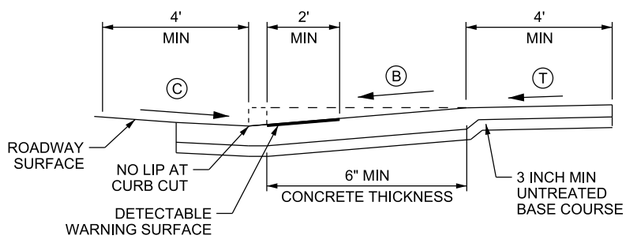

SECTION A-A

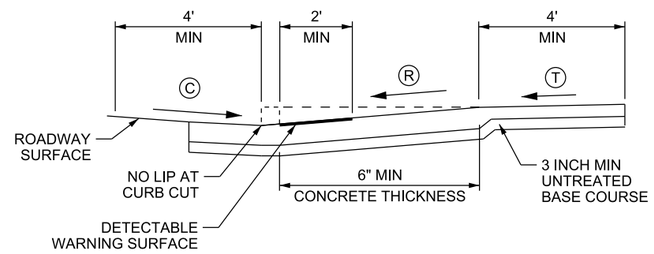

SECTION B-B

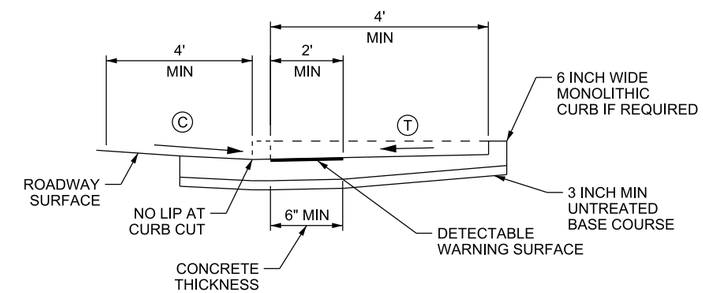

SECTION C-C

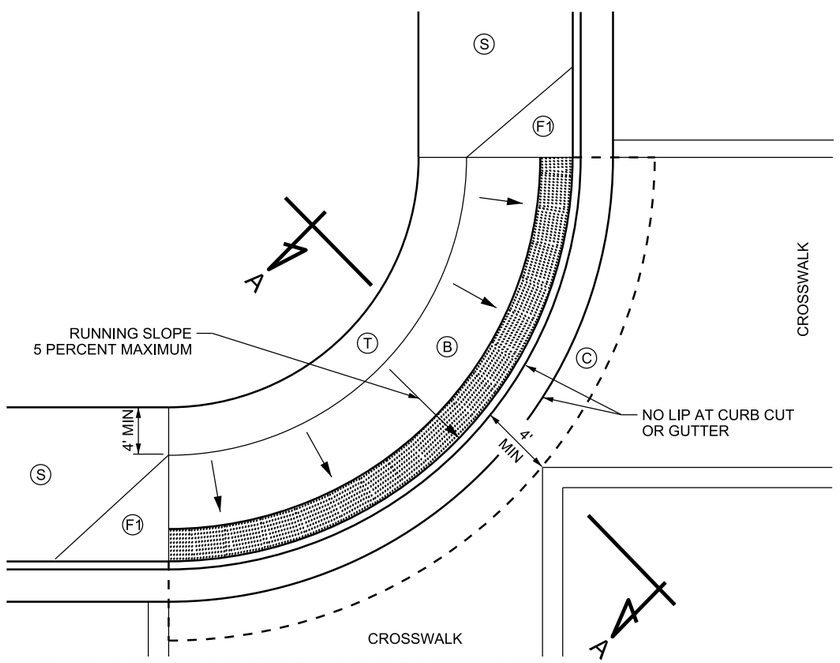

BLENDED TRANSITION AT CORNER DETAIL

SEE NOTE 5

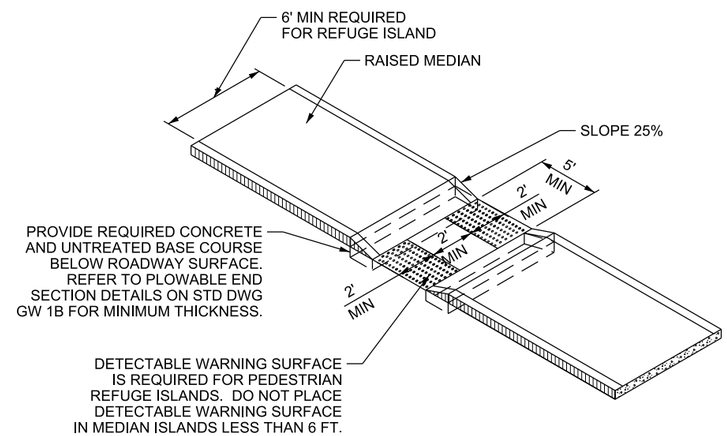

MEDIAN BREAK EXAMPLE

NOTES:

1. REFER TO STD DWG GW 5A FOR GENERAL NOTES PERTAINING TO THIS DRAWING.
2. REFER TO STD DWG GW 5A FOR SLOPE TABLE, DETECTABLE WARNING SURFACE DETAIL, DETECTABLE WARNING SURFACE PANEL GAP DETAIL, AND CLEAR SPACE/GUTTER DETAIL.
3. PERPENDICULAR AND PARALLEL RAMPS SHOWN ON THIS DRAWING ARE ACCEPTABLE FOR USE AT MID-BLOCK OR CORNER INSTALLATIONS.
4. REFER TO BLENDED TRANSITION DETAIL ON THIS DRAWING AND STD DWG GW 5C AND GW 5D FOR OTHER EXAMPLES OF CORNER INSTALLATIONS.
5. USE A 8 FT MINIMUM CURB CUT FOR BI-DIRECTIONAL CROSSWALKS. USE A 4 FT MINIMUM CURB CUT UPON APPROVAL OF THE REGION TRAFFIC OPERATIONS ENGINEER.

REVISIONS

NO.	DATE	APPR.	REMARKS

UTAH DEPARTMENT OF TRANSPORTATION
STANDARD DRAWINGS FOR ROAD AND BRIDGE CONSTRUCTION
SALT LAKE CITY, UTAH

RECOMMENDED FOR APPROVAL — JAN. 01, 2017 DATE
CHAIRMAN STANDARDS COMMITTEE APPROVED — JAN. 01, 2017 DATE
DEPUTY DIRECTOR

PEDESTRIAN ACCESS
STANDARD DRAWING TITLE

STD. DWG. NO.
PA 2

DGN File: L:\Standard Drawings\Imperial\2017 Approved\L-All Drawings\PA02.dgn
28-NOV-2016

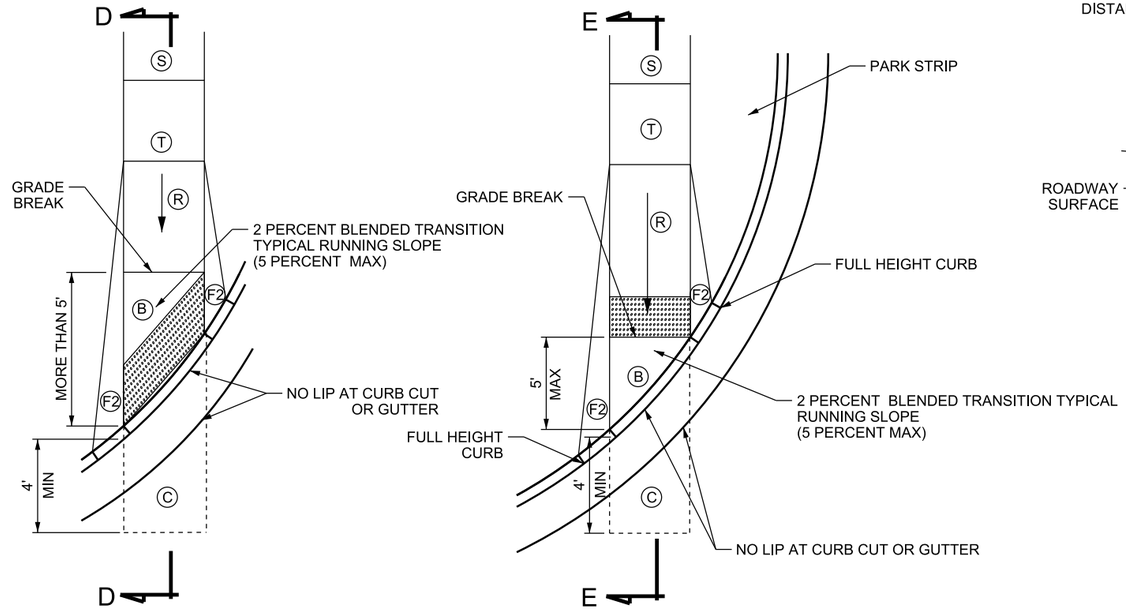

DIRECTIONAL PERPENDICULAR CORNER RAMP EXAMPLES

SEE NOTE 3

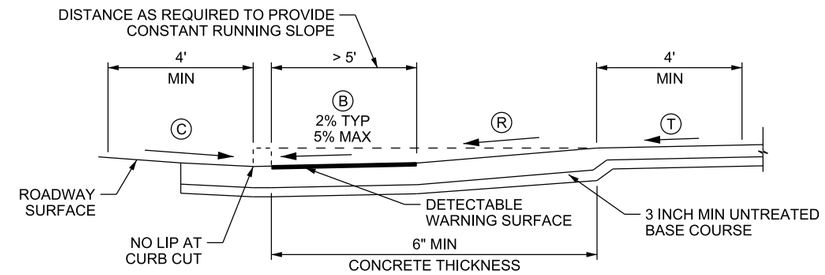

SECTION D-D

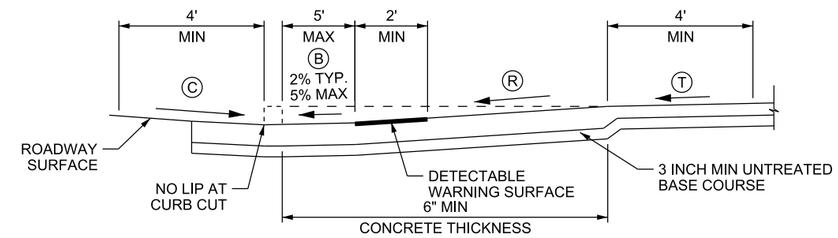

SECTION E-E

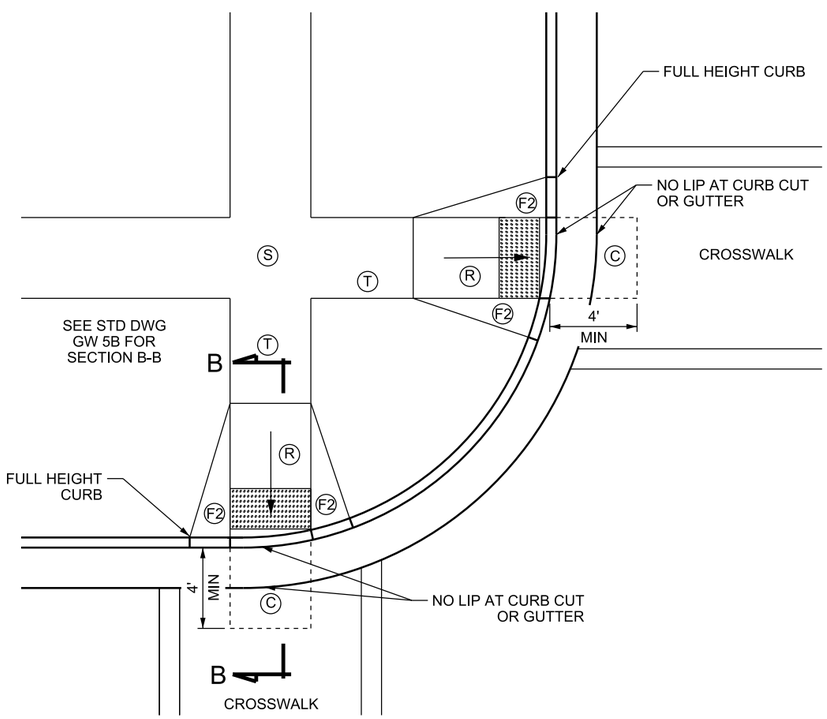

DUAL PERPENDICULAR CORNER RAMP EXAMPLE

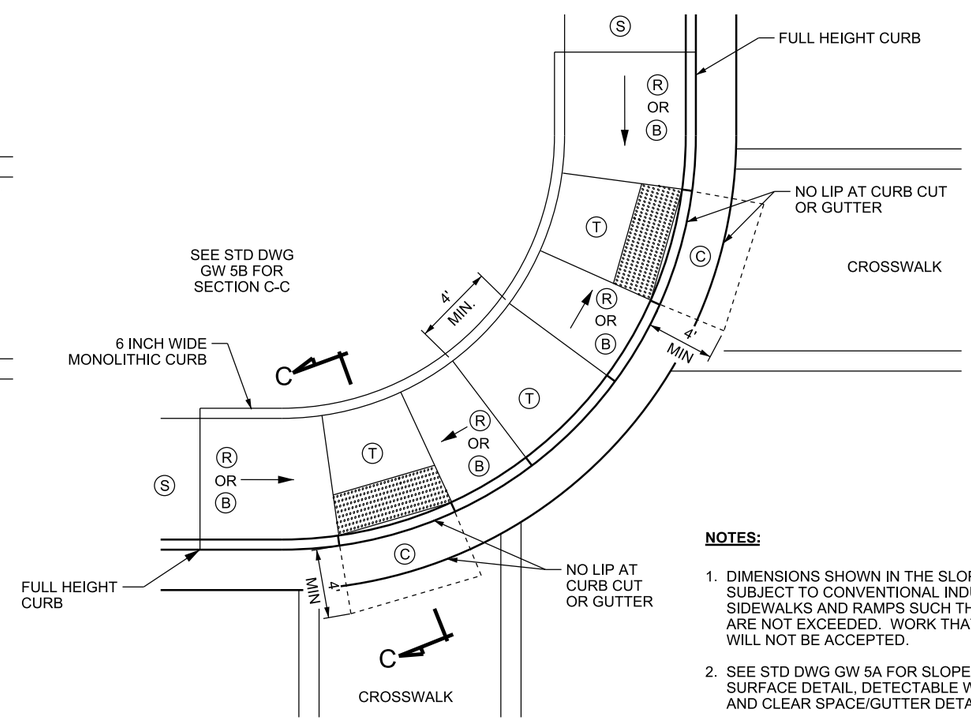

DUAL PARALLEL CORNER RAMP EXAMPLE

NOTES:

1. DIMENSIONS SHOWN IN THE SLOPE TABLE ON STD DWG GW 5A ARE NOT SUBJECT TO CONVENTIONAL INDUSTRY TOLERANCES. CONSTRUCT SIDEWALKS AND RAMPS SUCH THAT THE MAXIMUM OR MINIMUM VALUES ARE NOT EXCEEDED. WORK THAT EXCEEDS THOSE VALUES WILL NOT BE ACCEPTED.
2. SEE STD DWG GW 5A FOR SLOPE TABLE, DETECTABLE WARNING SURFACE DETAIL, DETECTABLE WARNING SURFACE PANEL GAP DETAIL, AND CLEAR SPACE/GUTTER DETAIL.
3. BLENDED TRANSITIONS MAY NOT REQUIRE RAMP AND TURNING SPACE.

REVISIONS

NO.	DATE	APPR.	REMARKS

UTAH DEPARTMENT OF TRANSPORTATION
STANDARD DRAWINGS FOR ROAD AND BRIDGE CONSTRUCTION
SALT LAKE CITY, UTAH

RECOMMENDED FOR APPROVAL — JAN. 01, 2017 DATE
CHAIRMAN STANDARDS COMMITTEE APPROVED — JAN. 01, 2017 DATE
DEPUTY DIRECTOR

STANDARD DRAWING TITLE: PEDESTRIAN ACCESS

STD. DWG. NO. PA 3

DGN File:L:\Standard Drawings\Imperial\2017 Approved\1-All Drawings\PA03.dgn
28-NOV-2016

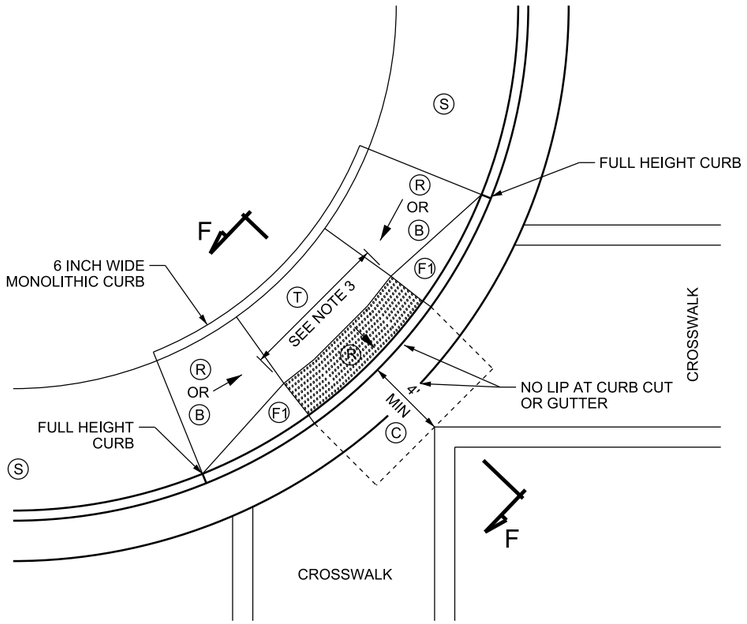

COMBINATION ACCESS AT APEX OF A CORNER EXAMPLE FOR BI-DIRECTIONAL CROSSWALK NEXT TO GUTTER

SEE NOTE 6

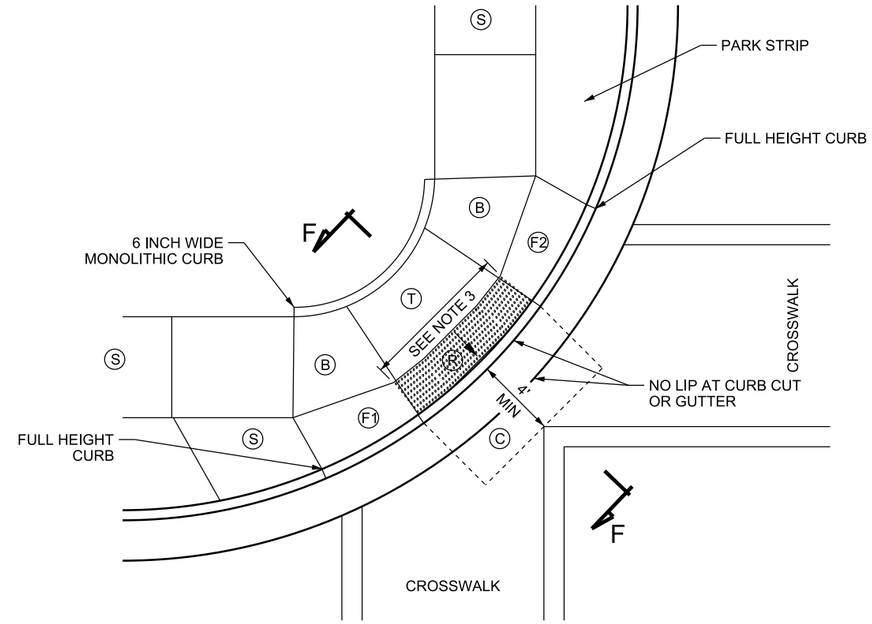

COMBINATION ACCESS AT APEX OF A CORNER EXAMPLE FOR BI-DIRECTIONAL CROSSWALK WITH PARK STRIP OR WIDE SIDEWALK

SEE NOTE 6

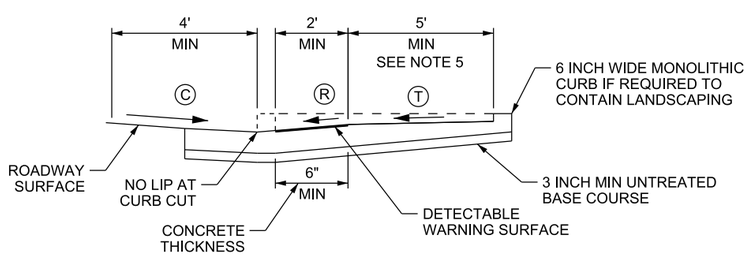

SECTION F-F

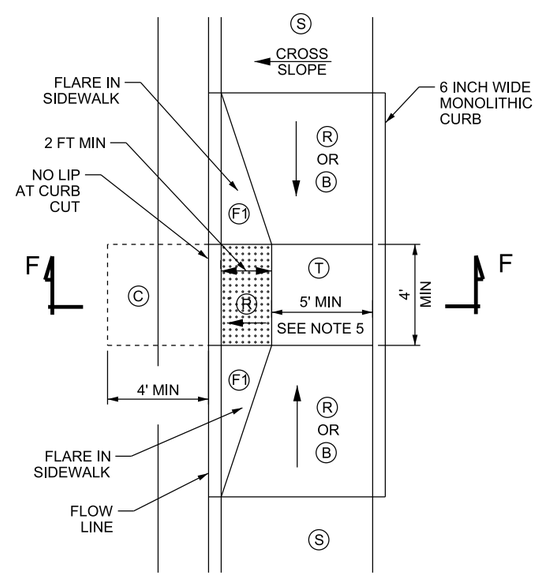

COMBINATION ACCESS NEXT TO GUTTER DETAIL

NOTES:

1. REFER TO STD DWG GW 5A FOR GENERAL NOTES PERTAINING TO THIS DRAWING.
2. REFER TO STD DWG GW 5A FOR SLOPE TABLE, DETECTABLE WARNING SURFACE DETAIL, DETECTABLE WARNING SURFACE PANEL GAP DETAIL, AND CLEAR SPACE/GUTTER DETAIL.
3. USE A 8 FT MINIMUM CURB CUT FOR BI-DIRECTIONAL CROSSWALKS. USE A 4 FT MINIMUM CURB CUT UPON APPROVAL OF THE REGION TRAFFIC OPERATIONS ENGINEER.
4. TURNING SPACE DEPTH: USE A 5 FT MINIMUM DEPTH WHEN THE TURNING SPACE IS CONSTRAINED. THE TURNING SPACE IS CONSTRAINED WHEN THERE IS A BARRIER SUCH AS A CURB ON THE REAR OF A PERPENDICULAR RAMP OR ON 2 OR MORE OF THE SIDES OF A PARALLEL RAMP.
5. THE TURNING SPACE IN SECTION F-F SERVES BOTH PARALLEL AND PERPENDICULAR RAMPS. THE MINIMUM DEPTH OF THE TURNING SPACE IS 4 FT WHEN THE REAR OF THE TURNING SPACE OF A PERPENDICULAR RAMP IS NOT CONSTRAINED.
6. DUAL RAMPS PREFERRED. USE COMBINATION ACCESS ONLY WITH APPROVAL OF THE REGION TRAFFIC ENGINEER.

REVISIONS				
NO.	DATE	APPR.		REMARKS

UTAH DEPARTMENT OF TRANSPORTATION
STANDARD DRAWINGS FOR ROAD AND BRIDGE CONSTRUCTION
SALT LAKE CITY, UTAH

RECOMMENDED FOR APPROVAL — JAN. 01, 2017 DATE
CHAIRMAN STANDARDS COMMITTEE APPROVED — JAN. 01, 2017 DATE
DEPUTY DIRECTOR

PEDESTRIAN ACCESS
STANDARD DRAWING TITLE

STD. DWG. NO.
PA 4

DGN File: L:\Standard Drawings\Imperial\2017 Approved\1-All Drawings\PA04.dgn
28-NOV-2016

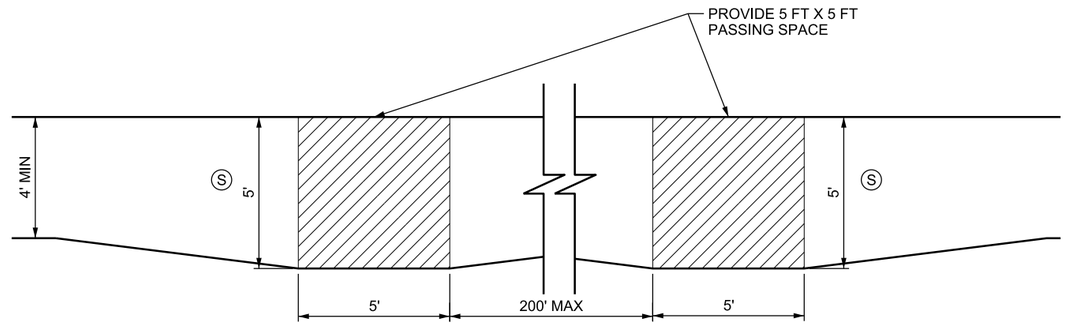

PASSING SPACE
DETAIL A

SEE NOTES 1, 2

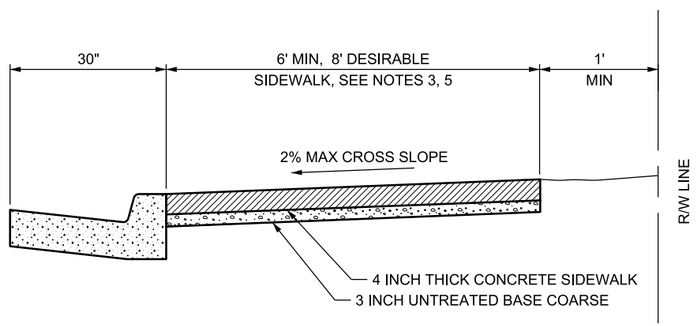

NO PARKSTRIP
DETAIL B

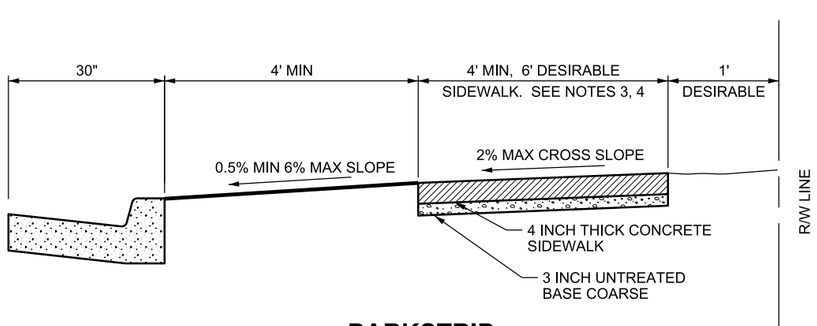

PARKSTRIP
DETAIL C

NOTES:

1. INSTALL 8:1 OR FLATTER TAPER, WHEN CHANGING THE WIDTH OF SIDEWALK.
2. PROVIDE A 5 FT X 5 FT PASSING SPACE ON PEDESTRIAN ACCESS ROUTES LESS THAN 5 FT WIDE, AT INTERVALS OF 200 FT MAXIMUM.
3. SIDEWALK CROSS SLOPE DIMENSIONS SHOWN ARE NOT SUBJECT TO CONVENTIONAL INDUSTRY TOLERANCES. CONSTRUCT SIDEWALKS AND RAMPS SUCH THAT THE MAXIMUM OR MINIMUM VALUES ARE NOT EXCEEDED. WORK THAT EXCEEDS THOSE VALUES WILL NOT BE ACCEPTED.
4. PROVIDE A 5 FT x 5 FT PASSING AREA ON SIDEWALKS OF LESS THAN 5 FT WIDE WHEN THERE IS NOT A HARD SURFACE PASSING AREA OF 5 FT MINIMUM WIDTH IN A 200 FT SEGMENT.
5. A MINIMUM OF 7 FT IS REQUIRED AT BACK OF SIDEWALK AT DRIVEWAY LOCATIONS TO MEET GRADING REQUIREMENTS.

REVISIONS

NO.	DATE	APPR.	REMARKS

UTAH DEPARTMENT OF TRANSPORTATION
STANDARD DRAWINGS FOR ROAD AND BRIDGE CONSTRUCTION
SALT LAKE CITY, UTAH

RECOMMENDED FOR APPROVAL — JAN. 01, 2017 DATE
CHAIRMAN STANDARDS COMMITTEE APPROVED — JAN. 01, 2017 DATE
DEPUTY DIRECTOR

STANDARD DRAWING TITLE
PEDESTRIAN ACCESS

STD. DWG. NO.
PA 5

DGN File: L:\Standard Drawings\Imperial\2017 Approved\1-All Drawings\PA05.dgn
28-NOV-2016

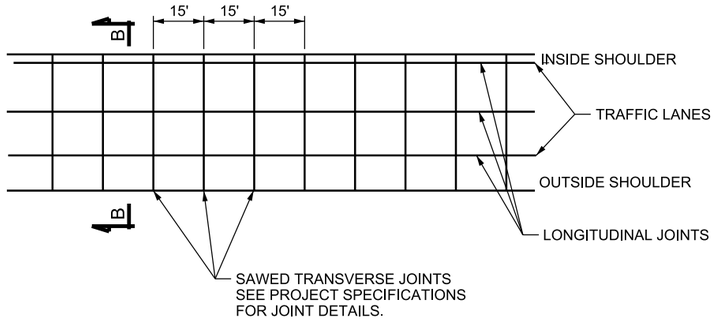

TYPICAL JOINT LOCATION DETAIL

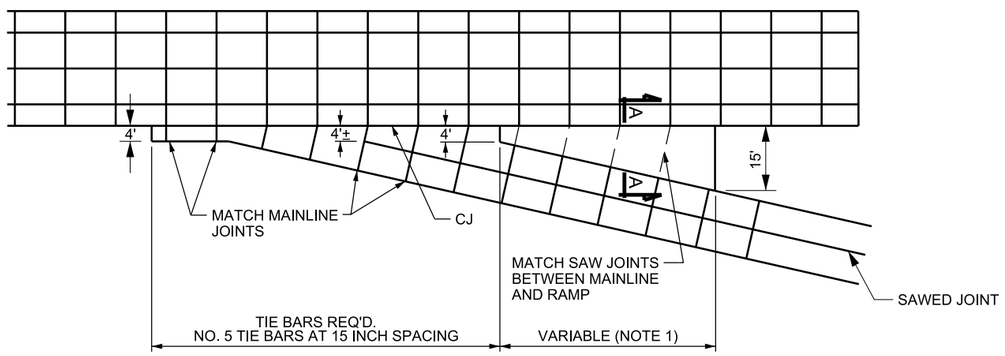

SHOULDER TRANSITION FOR RAMPS AND RAMP GORE PAVING DETAIL

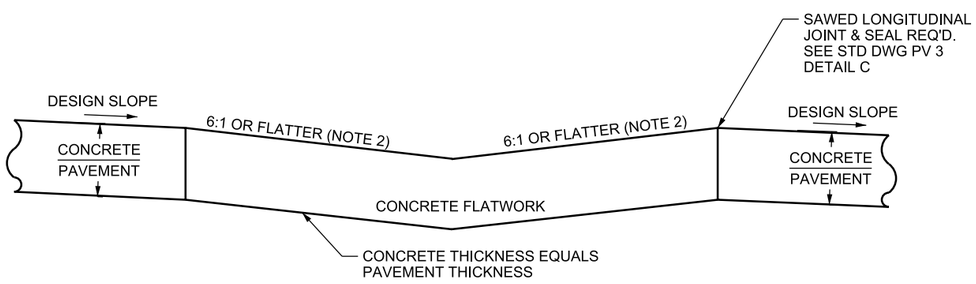

SECTION A-A

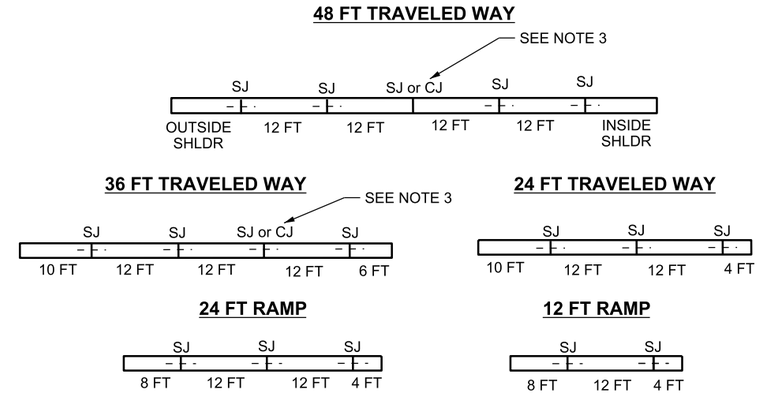

SECTION B-B
REQUIRED PAVING CONFIGURATIONS

CJ - CONTACT JOINT
SJ - SAW JOINT

NOTES:

1. ESTIMATED QUANTITIES FOR CONCRETE FLATWORK ARE CALCULATED ON TANGENT SECTION. IN ALL CASES LENGTH OF GORE PAVING WILL BE CARRIED AHEAD UNTIL THE DISTANCE BETWEEN PAVING IS 15 FT.
2. SLOPE MAY VARY TO MEET DESIGN CONDITIONS ON RAMP AND MAINLINE. GRADE TO DRAIN, ADJUST FOR FIELD CONDITIONS.
3. CONTACT JOINT (CJ) TIE BARS REQUIRED AT ALL LOCATIONS WHERE CONCRETE IS TO BE EXTENDED SEE STD DWG PV 3 AND PV 4 FOR JOINT DETAILS.

REVISIONS

NO.	DATE	APPR.	REMARKS

UTAH DEPARTMENT OF TRANSPORTATION
STANDARD DRAWINGS FOR ROAD AND BRIDGE CONSTRUCTION
SALT LAKE CITY, UTAH

RECOMMENDED FOR APPROVAL — JAN.01.2017 DATE
CHAIRMAN STANDARDS COMMITTEE APPROVED — JAN.01.2017 DATE
DEPUTY DIRECTOR

JOINTS FOR HIGHWAYS WITH CONCRETE TRAFFIC LANES AND SHOULDERS
STANDARD DRAWING TITLE

STD. DWG. NO.
PV 1

28-NOV-2016 DGN File:L:\Standard Drawings\Imperial\2017 Approved\1-All Drawings\PV01.dgn

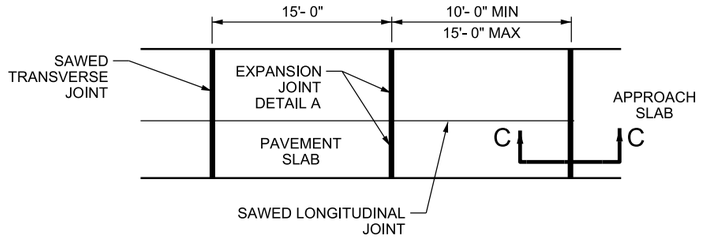

NORMAL APPROACH SLAB

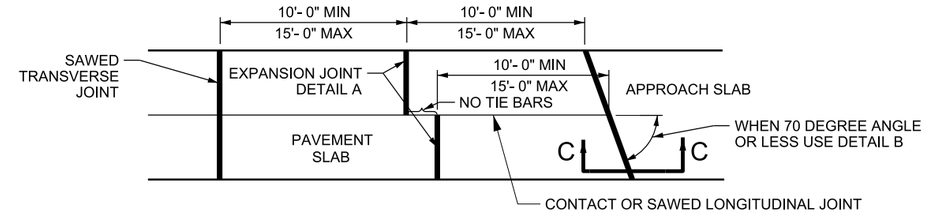

SKEWED APPROACH SLAB

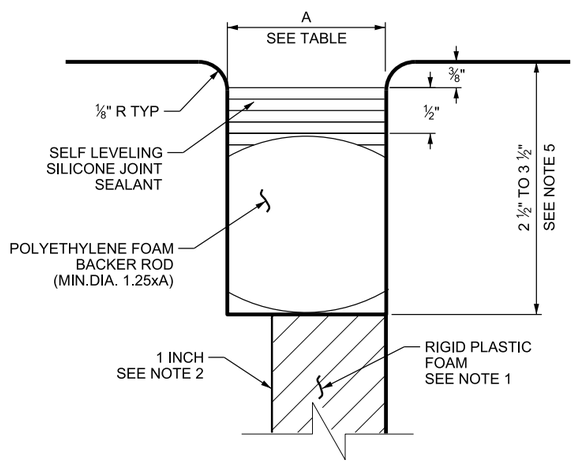

DETAIL "D"

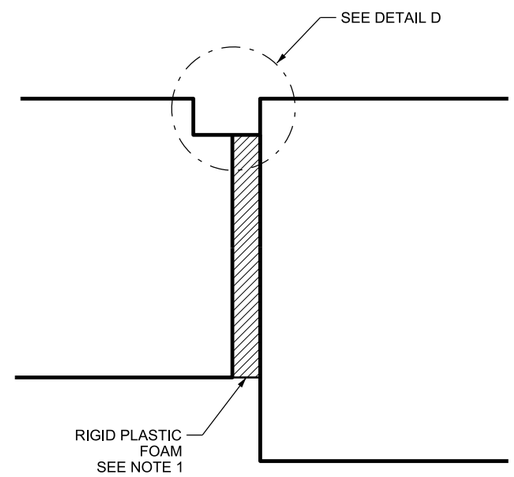

SECTION C-C

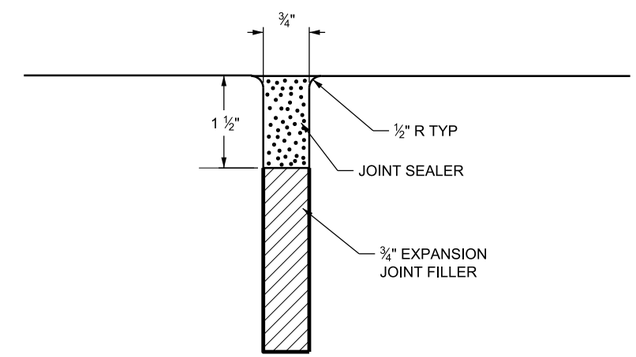

DETAIL "A"

(EXPANSION JTS.)

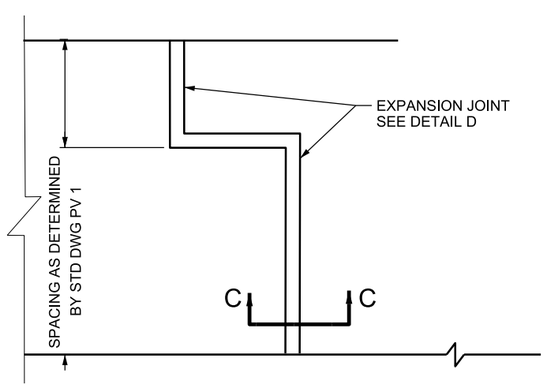

DETAIL "B"

TYPICAL EACH SLAB

APPROACH SLAB JOINT WIDTH (inch)

TEMPERATURE (DEG F)	DIMENSION A (FOR BRIDGES GREATER THAN 250 FT LENGTH)	DIMENSION A (FOR ALL OTHER BRIDGES)
90	1 1/4	1 1/4
60	1 3/4	1 1/2
35	2	1 3/4

SEE NOTE 3

NOTES:

1. USE CLOSED CELL, RIGID PLASTIC FOAM. CUT RIGID PLASTIC FOAM TO CONFORM TO THE CROSS SECTION OF THE PAVEMENT AND FURNISH IN STRIPS EQUAL TO THE WIDTH OF THE PAVEMENT SLAB. MAKE THE TOP SURFACE SMOOTH. PROVIDE A SNUG FIT WITHOUT LOSS IN THICKNESS OF THE MATERIAL.
2. USE 1 ½ INCH FOR TEMPERATURES LESS THAN 50 DEGREES F AT TIME OF ROADWAY PAVING FOR BRIDGES GREATER THAN 250 FT LENGTH.
3. DO NOT INSTALL JOINT SEALANT ABOVE 90 DEGREES F OR BELOW 50 DEGREES F.
4. APPLY DETAIL D ALONG LONGITUDINAL EDGES OF STEP FOR STEPPED END APPROACH SLABS. DO NOT PLACE DOWELS ALONG LONGITUDINAL EDGES.
5. DEPTH TO BE DETERMINED BY CONTRACTOR BASE ON ACTUAL COMPRESSED BACKER ROD HEIGHT.

REVISIONS

NO.	DATE	APPR.	REMARKS

UTAH DEPARTMENT OF TRANSPORTATION
STANDARD DRAWINGS FOR ROAD AND BRIDGE CONSTRUCTION
SALT LAKE CITY, UTAH

RECOMMENDED FOR APPROVAL — JAN.01, 2017 DATE
CHAIRMAN STANDARDS COMMITTEE APPROVED — JAN 01, 2017 DATE
DEPUTY DIRECTOR

STANDARD DRAWING TITLE
PAVEMENT/APPROACH SLAB DETAILS

STD. DWG. NO.
PV 2

DGN File:L:\Standard Drawings\Imperial\2017 Approved\1-All Drawings\PV02.dgn
28-NOV-2016

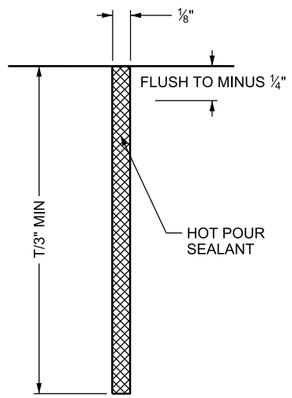

DETAIL "A"

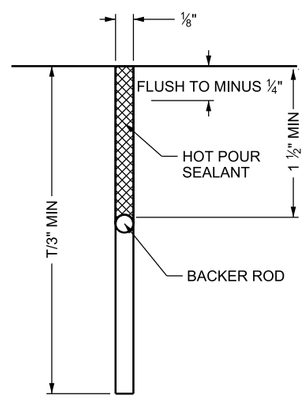

DETAIL "B"

OPTIONAL INSTALLATION

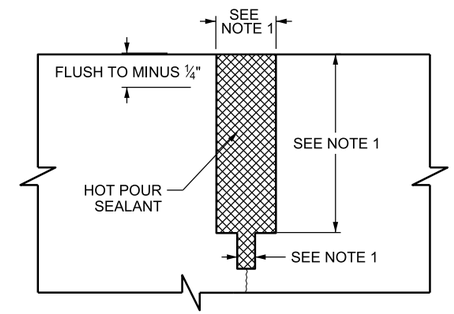

DETAIL "D"

REHABILITATION OF EXISTING SILICONE JOINT

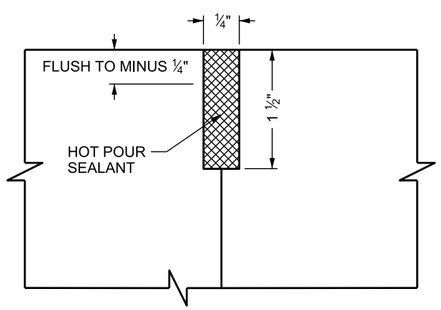

DETAIL "C"

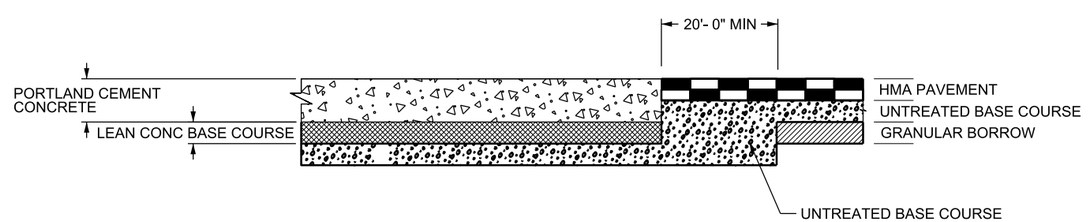

DETAIL "E"

CONCRETE TO FLEXIBLE PAVEMENT TRANSITION

NOTES:

1. DIMENSIONS MAY VARY DEPENDING ON ORIGINAL JOINT CONSTRUCTION.

REVISIONS

NO.	DATE	APPR.	REMARKS

UTAH DEPARTMENT OF TRANSPORTATION

STANDARD DRAWINGS FOR ROAD AND BRIDGE CONSTRUCTION
SALT LAKE CITY, UTAH

RECOMMENDED FOR APPROVAL — JAN. 01, 2017 DATE

CHAIRMAN STANDARDS COMMITTEE APPROVED — JAN. 01, 2017 DATE

DEPUTY DIRECTOR

CONCRETE PAVEMENT DETAILS 1 OF 2

STANDARD DRAWING TITLE

STD. DWG. NO.

PV 3

28-NOV-2016 DGN File: L:\Standard Drawings\Imperial\2017 Approved\1-All Drawings\PV03.dgn

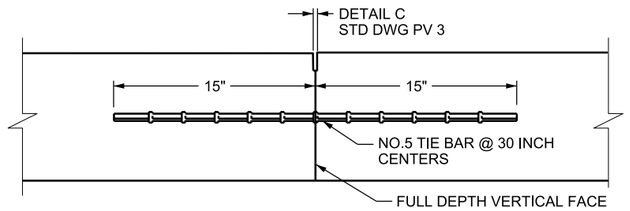

LONGITUDINAL CONTACT JOINT DETAIL "A"

NOTE: NO. 5 TIE BAR @ 15 INCH CENTERS IF DRILLED AND EPOXIED.

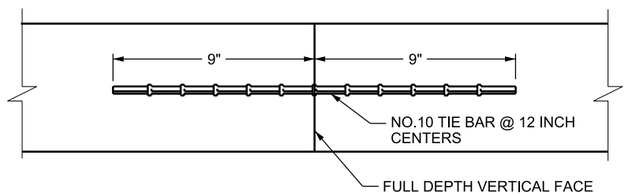

MID-PANEL CONTACT JOINT DETAIL "B"

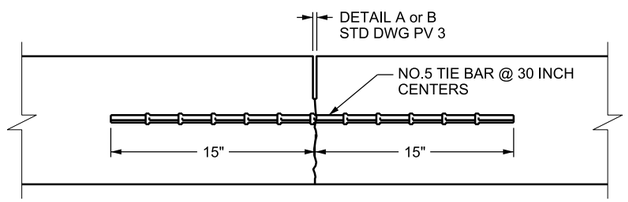

SAWED LONGITUDINAL JOINT DETAIL "C"

(T/3 SAW CUT W/ AGGREGATE INTERLOCK BELOW)

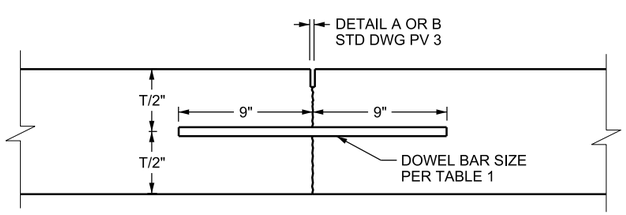

LOAD TRANSFER DOWEL BAR JOINT DETAIL "D"

INSTALL DOWEL BARS PARALLEL TO THE CENTERLINE AND TO THE PAVEMENT SURFACE.
LIMIT DEVIATIONS FROM PARALLEL TO ± ¼ INCH IN THE LENGTH OF THE DOWEL BAR.

JOINT SECTION DETAILS

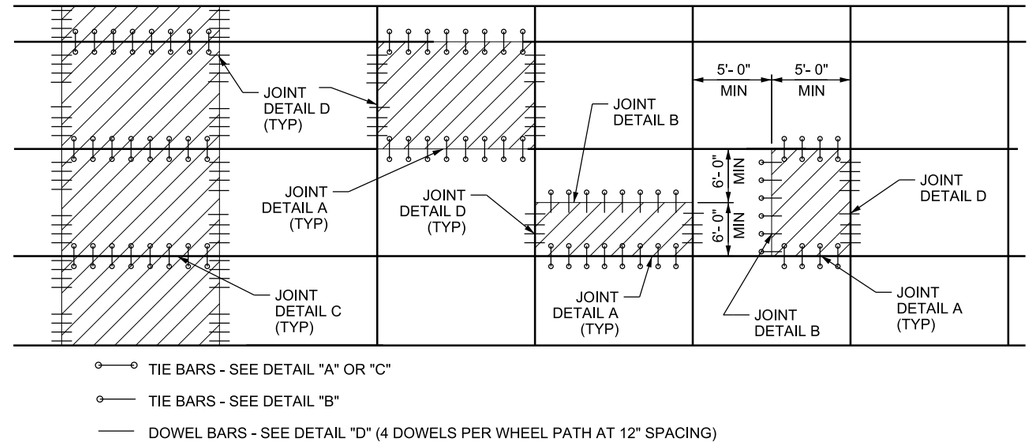

TYPICAL PAVEMENT PANEL REPLACEMENT

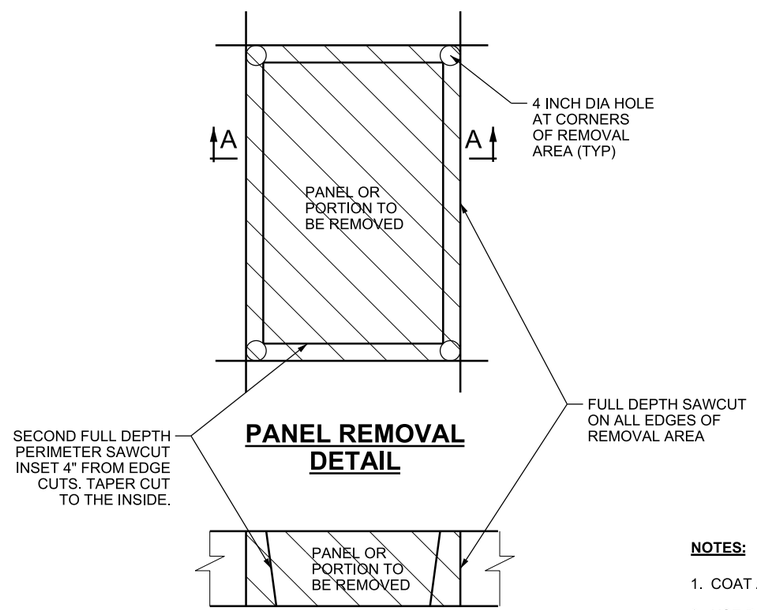

PANEL REMOVAL DETAIL

SECTION A-A

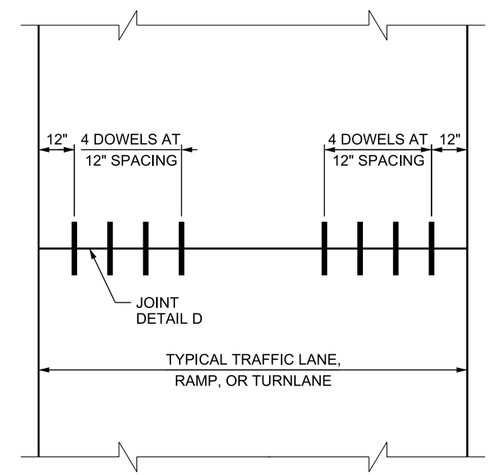

LOAD TRANSFER DOWEL BAR LAYOUT FOR NEW PAVEMENT

TABLE 1	
PAVEMENT THICKNESS	DOWEL BAR DIAMETER
LESS THAN 9"	1"
≥ 9" AND < 11"	1.25"
11" OR GREATER	1.5"

NOTES:

1. COAT ALL BARS ACCORDING TO STANDARD SPECIFICATION 03211.
2. USE DEFORMED REINFORCING BAR FOR TIE BARS.
3. USE SMOOTH DOWEL BARS.
4. MAKE FULL DEPTH SAWCUT AROUND ALL EDGES OF PANELS OR PORTIONS REPLACED. MINIMIZE OVERCUT INTO ADJACENT PANELS.
5. REPLACE THE ENTIRE PANEL WHEN REPLACING A PARTIAL PANEL IF THE WIDTH OF REMAINING PORTION IS LESS THAN THE MINIMUM SHOWN.
6. DO NOT INSTALL DOWEL BARS IN THE SHOULDERS UNLESS DIRECTED TO DO SO BY THE PROJECT SPECIFIC SPECIAL PROVISION OR PLAN SHEET.
7. PARTIAL PANEL REPLACEMENTS APPLY ONLY TO THE REHABILITATION OF EXISTING PAVEMENTS AND NOT TO PROJECTS CONSTRUCTING NEW OR ORIGINAL PAVEMENT. REPAIRS TO PAVEMENT ON NEW PROJECTS REQUIRE FULL PANEL REPLACEMENT.
8. ELIMINATE TIE BARS THAT INTERFERE WITH "LOAD TRANSFER DOWEL BARS".

REVISIONS

NO.	DATE	APPR.	REMARKS

UTAH DEPARTMENT OF TRANSPORTATION
STANDARD DRAWINGS FOR ROAD AND BRIDGE CONSTRUCTION
SALT LAKE CITY, UTAH

RECOMMENDED FOR APPROVAL — JAN.01.2017 DATE
CHAIRMAN STANDARDS COMMITTEE APPROVED — JAN.01.2017 DATE
DEPUTY DIRECTOR

STANDARD DRAWING TITLE: CONCRETE PAVEMENT DETAILS 2 OF 2

STD. DWG. NO. PV 4

DGN File: L:\Standard Drawings\Imperial\2017 Approved\1-All Drawings\PV04.dgn
28-NOV-2016

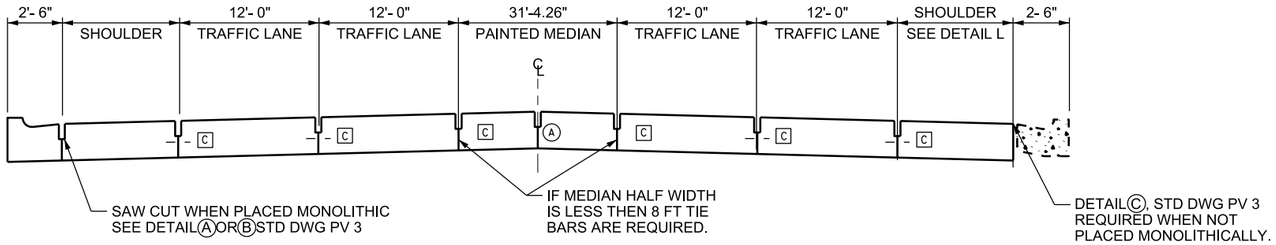

PAVEMENT TRANSITION

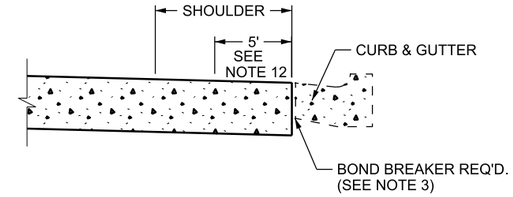

DETAIL L

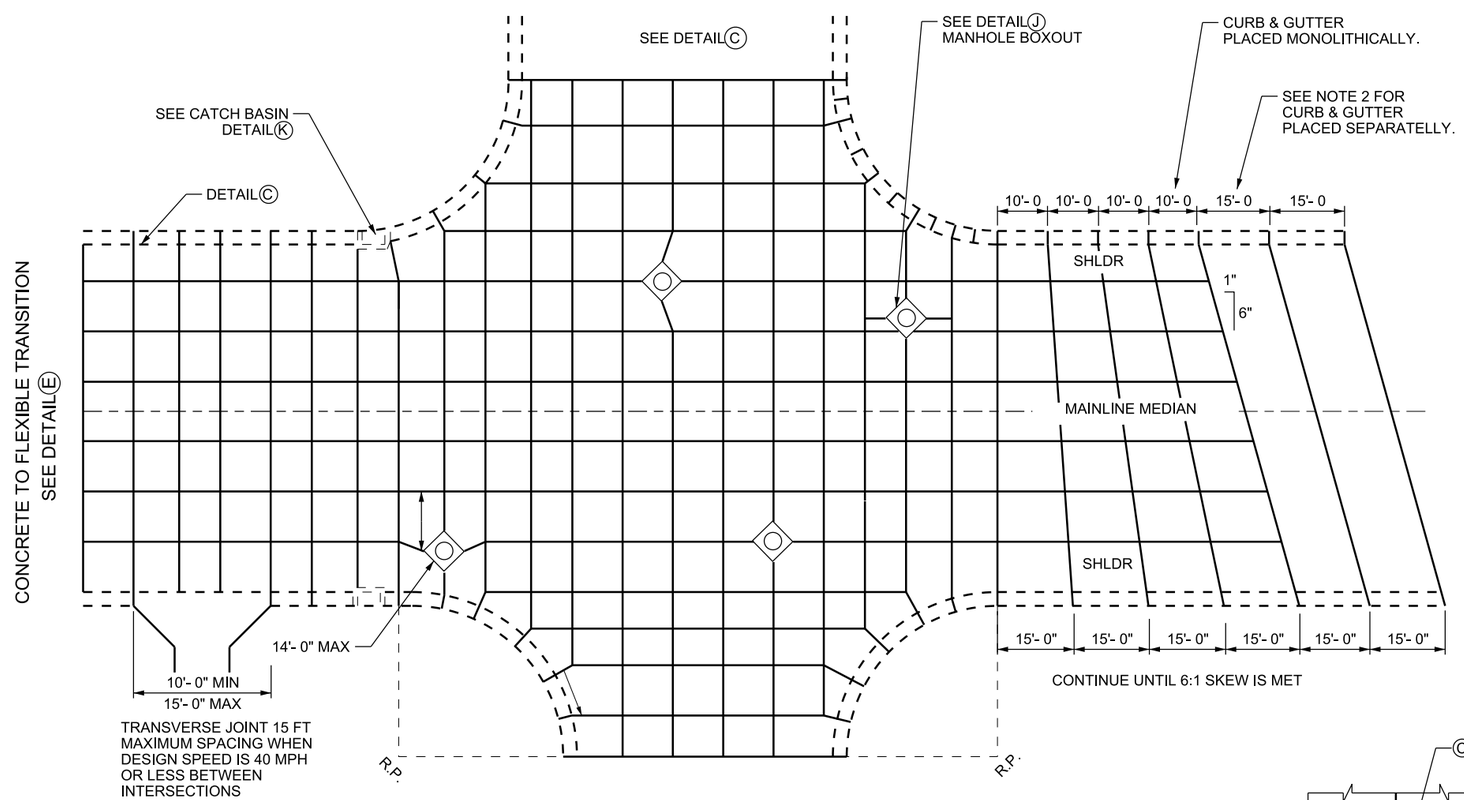

CONCRETE TO CONCRETE TRANSITION

SEE NOTE 7.

INTERSECTION JOINT LAYOUT

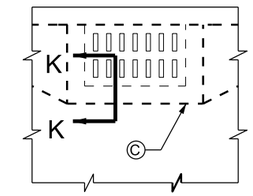

CATCH BASIN
DETAIL K

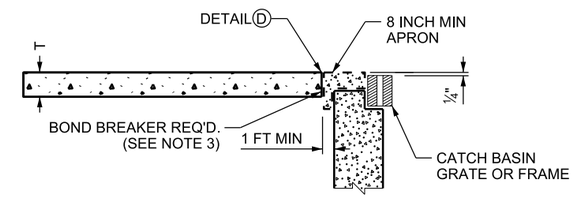

SECTION K- K

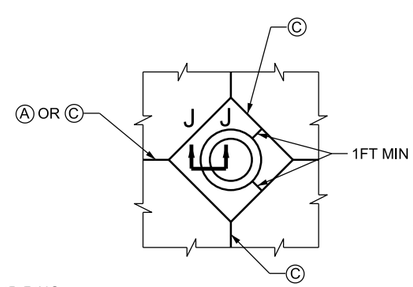

MANHOLE BOXOUT
DETAIL J

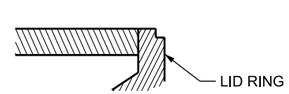

SECTION J- J

NOTES:

1. CURB & GUTTER JOINTS TO BE CONTINUOUS WITH PAVEMENT WHEN PLACED MONOLITHICALLY WITH PAVEMENT.
2. CURB & GUTTER JOINTS NORMAL TO THE FLOWLINE AND AT ONE HALF THE PAVEMENT JOINT SPACING, WHEN PLACED SEPARATELY FROM THE PAVEMENT.
3. PLACE A BOND BREAKER AS SHOWN IN DETAIL L AND SECTION K-K WHERE CONCRETE PAVEMENT IS PLACED AGAINST EXISTING CURB & GUTTER, DRIVEWAYS AND WALKWAYS.
4. REFER TO PROJECT SPECIFICATIONS FOR JOINT INFORMATION AND DETAILS.
5. PREFERRED TRANSVERSE JOINT LOCATIONS ARE: MORE THAN 5 FT FROM LARGE APPURTENANCES WITH NO BOXOUT: OR AT THE CORNER OF RECTANGULAR BOXOUTS OR APPURTENANCES.
6. SHORTEN ONE OR MORE PANELS EITHER SIDE OF OPENING TO PERMIT JOINT TO FALL AT CORNERS OF RECTANGULAR STRUCTURES WHEN A JOINT FALLS WITHIN 5 FT OF OR CONTACTS BASINS, MANHOLES, OR OTHER STRUCTURES.
7. DETAIL C REQUIRED. WHEN CROSS STREET IS CONCRETE AND AT STRUCTURES.
8. SEE STD DWG GW 3 FOR CURB & GUTTERS DETAILS.
9. SEE STD DWG GW 6 FOR DRIVEWAY DETAILS.
10. LETTER INSIDE ◯ DENOTES DETAIL, STD DWG PV 3
11. LETTER INSIDE ☐ DENOTES DETAIL, STD DWG PV 4
12. SLOPE OF 5 FT SECTION NEXT TO CURB AND GUTTER MAY BE STEEPENED TO MATCH LIP OF EXISTING GUTTER.

NO.	DATE	APPR.	REMARKS

REVISIONS

UTAH DEPARTMENT OF TRANSPORTATION
STANDARD DRAWINGS FOR ROAD AND BRIDGE CONSTRUCTION
SALT LAKE CITY, UTAH

RECOMMENDED FOR APPROVAL — JAN.01, 2017 DATE
CHAIRMAN STANDARDS COMMITTEE APPROVED — JAN.01, 2017 DATE
DEPUTY DIRECTOR

STANDARD DRAWING TITLE
URBAN CONCRETE
PAVEMENT DETAILS

STD. DWG. NO.
PV 5

28-NOV-2016 DGN File: L:\Standard Drawings\Imperial\2017 Approved\1-All Drawings\PV05.dgn

RUMBLE STRIP TABLES

UNDIVIDED ROADWAY		
SHOULDER WIDTH	GROOVE WIDTH	RUMBLE STRIP LOCATION
> 4 FT	6 INCHES	A
2 FT TO 4 FT	6 INCHES	B
1 FT TO 2 FT	6 INCHES	C
< 1 FT	——	NO RUMBLE STRIP
CENTERLINE	6 INCHES	SEE STD DWGS PV 7B & PV 8

NON-FREEWAY DIVIDED ROADWAY		
SHOULDER WIDTH	GROOVE WIDTH	RUMBLE STRIP LOCATION
< 6 FT	8 INCHES	B
≥ 6 FT	12 INCHES	A

FREEWAY		
SHOULDER WIDTH	GROOVE WIDTH	RUMBLE STRIP LOCATION
ALL	12 INCHES	A

NON-BICYCLE ROUTE

SHOULDER WIDTH	GROOVE WIDTH	RUMBLE STRIP LOCATION
< 3 FT (SEE NOTE 10)	——	NO RUMBLE STRIP
3 FT TO < 4 FT	6 INCHES	C
4 FT TO < 6 FT	6 INCHES	B
> 6 FT	6 INCHES	A
FREEWAY - ALL	12 INCHES	A

BICYCLE ROUTE

(SEE NOTE 9)

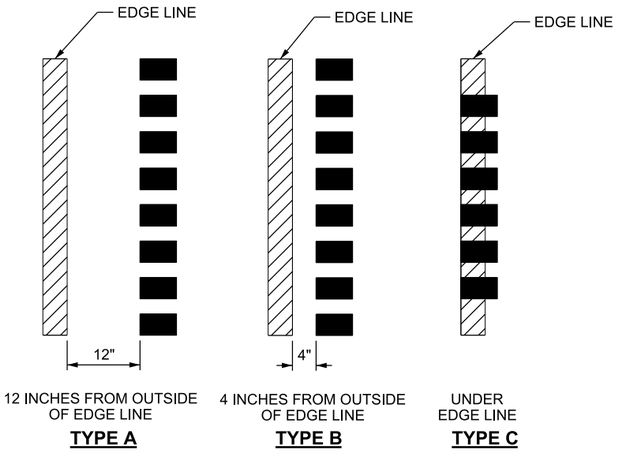

SHOULDER RUMBLE STRIP LOCATIONS

NOTES:

1. DO NOT PLACE RUMBLE STRIPS ON STRUCTURES OR APPROACH SLABS.
2. DO NOT PLACE RUMBLE STRIPS WITHIN 6 INCHES OF PCCP TRANSVERSE JOINTS.
3. APPLY FLUSH OR SEAL COAT UNIFORMLY ON ALL RUMBLE STRIPS ON BITUMINOUS PAVEMENT SURFACES. SEE STANDARD SPECIFICATION 02761.
4. MILL RUMBLE STRIPS TO LEAVE A RECTANGULAR SHAPE WITH UNIFORM EDGES. DO NOT DAMAGE ADJACENT PAVEMENT DURING MILLING OPERATION.
5. RESTART RUMBLE STRIP SEQUENCE (SEE STD DWG PV 7A & 7B) WHEN RUMBLE STRIPS ARE HALTED OR INTERRUPTED, EXCEPT WHEN TRANSVERSE JOINTS ARE ENCOUNTERED ON PCCP, MANUALLY INTERRUPT SEQUENCE SO RUMBLE STRIPS DO NOT GO THROUGH TRANSVERSE JOINT WHILE MAINTAINING SEQUENCE LENGTH.
6. INSTALL RUMBLE STRIPS ONLY WHERE A MINIMUM UNINTERRUPTED LENGTH OF 100 FT CAN BE INSTALLED. DISCONTINUE RUMBLE STRIPS WHEN SHOULDER WIDTH VARIES AND WHEN WIDTH IS LESS THAN SHOWN IN RUMBLE STRIP TABLES. RESUME WHEN WIDTH IS SUFFICIENT AS SHOWN IN RUMBLE STRIP TABLES, FOR MORE THAN A 100 FT IN LENGTH.
7. SEE STD DWG PV 6B FOR RUMBLE STRIP MILL DETAIL.
8. SHOULDER WIDTH IS DEFINED AS THE EFFECTIVE SHOULDER WIDTH.
9. USE BICYCLE ROUTE TABLE FOR NATIONAL, STATE AND LOCAL BICYCLE ROUTES.
10. USE SHOULDER RUMBLE STRIP LOCATION TYPE C WITH A GROOVE WIDTH OF 6 INCHES WHEN SHOULDER WIDTH IS LESS THAN 3 FT AT THE DIRECTION OF THE REGION TRAFFIC ENGINEER.

NO.	DATE	APPR.	REMARKS

REVISIONS

UTAH DEPARTMENT OF TRANSPORTATION
STANDARD DRAWINGS FOR ROAD AND BRIDGE CONSTRUCTION
SALT LAKE CITY, UTAH

RECOMMENDED FOR APPROVAL — JAN.01.2017 DATE
CHAIRMAN STANDARDS COMMITTEE APPROVED — JAN.01.2017 DATE
DEPUTY DIRECTOR

STANDARD DRAWING TITLE
RUMBLE STRIPS LOCATION DETAILS

STD. DWG. NO.
PV 6A

28-NOV-2016 DGN File:L:\Standard Drawings\Imperial\2017 Approved\1-All Drawings\PV060a.dgn

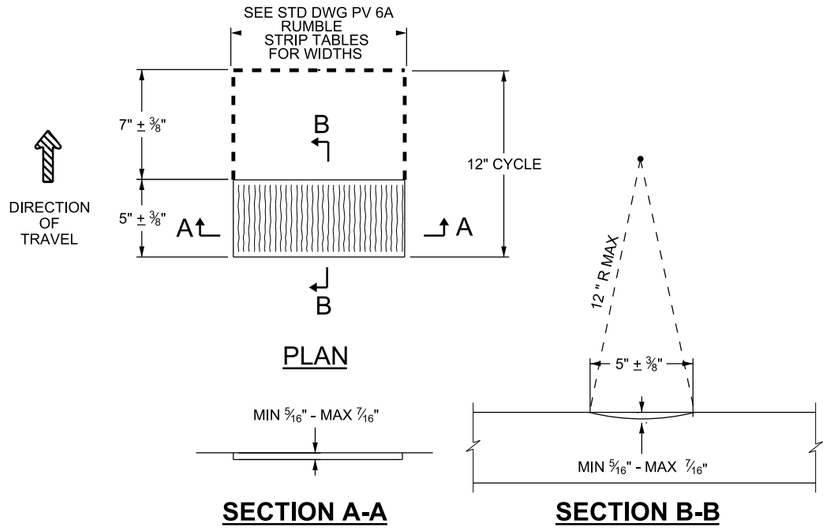

NON-FREEWAY SHOULDER RUMBLE STRIP MILL DETAILS

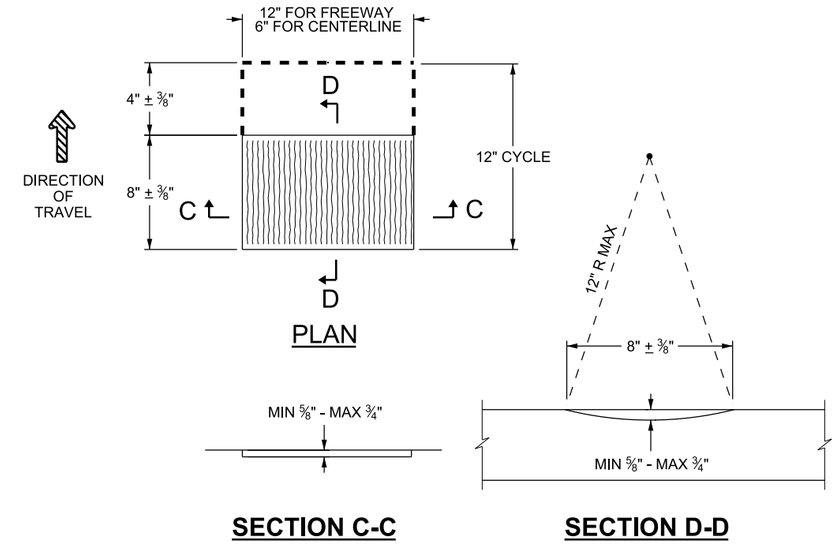

FREEWAY AND CENTERLINE RUMBLE STRIP MILL DETAILS

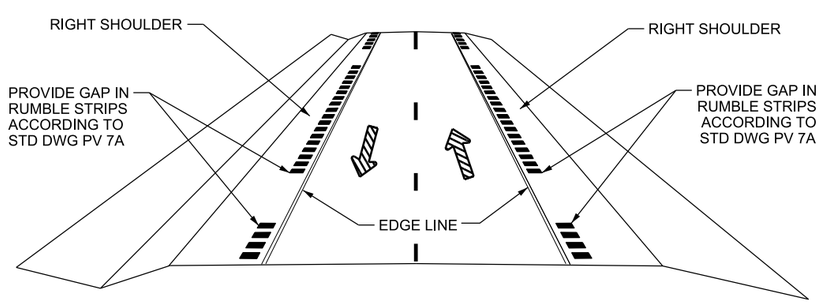

UNDIVIDED HIGHWAY

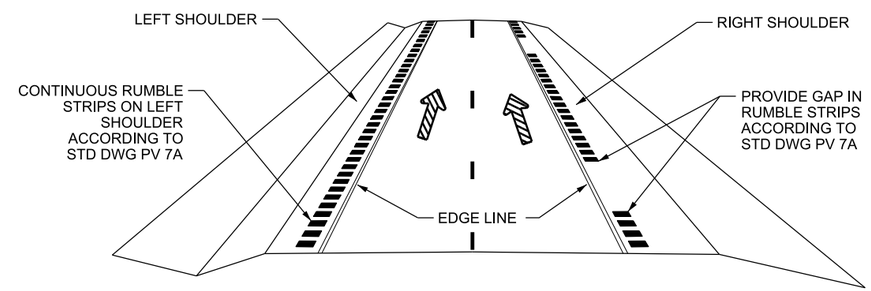

DIVIDED HIGHWAY & FREEWAY

NOTES:

1. DO NOT PLACE RUMBLE STRIPS ON STRUCTURES OR APPROACH SLABS.
2. DO NOT PLACE RUMBLE STRIPS WITHIN 6 INCHES OF PCCP TRANSVERSE JOINTS.
3. APPLY FLUSH OR SEAL COAT UNIFORMLY ON ALL RUMBLE STRIPS ON BITUMINOUS PAVEMENT SURFACES. SEE STANDARD SPECIFICATION 02761.
4. MILL RUMBLE STRIPS TO LEAVE A RECTANGULAR SHAPE WITH UNIFORM EDGES. DO NOT DAMAGE ADJACENT PAVEMENT DURING MILLING OPERATION.
5. RESTART RUMBLE STRIP SEQUENCE (SEE STD DWG PV 7A & 7B) WHEN RUMBLE STRIPS ARE HALTED OR INTERRUPTED, EXCEPT WHEN TRANSVERSE JOINTS ARE ENCOUNTERED ON PCCP, MANUALLY INTERRUPT SEQUENCE SO RUMBLE STRIPS DO NOT GO THROUGH TRANSVERSE JOINT WHILE MAINTAINING SEQUENCE LENGTH.
6. INSTALL RUMBLE STRIPS ONLY WHERE A MINIMUM UNINTERRUPTED LENGTH OF 100 FT CAN BE INSTALLED. DISCONTINUE RUMBLE STRIPS WHEN SHOULDER WIDTH VARIES AND WHEN WIDTH IS LESS THAN SHOWN IN RUMBLE STRIP TABLES. RESUME WHEN WIDTH IS SUFFICIENT AS SHOWN IN RUMBLE STRIP TABLES, FOR MORE THAN A 100 FT IN LENGTH.
7. SEE STD DWG PV 6A FOR RUMBLE STRIP TABLES WITH GROOVE WIDTH AND LOCATION.

REVISIONS

NO.	DATE	APPR.	REMARKS

UTAH DEPARTMENT OF TRANSPORTATION
STANDARD DRAWINGS FOR ROAD AND BRIDGE CONSTRUCTION
SALT LAKE CITY, UTAH

RECOMMENDED FOR APPROVAL — JAN.01.2017 DATE
CHAIRMAN STANDARDS COMMITTEE APPROVED — JAN.01.2017 DATE
DEPUTY DIRECTOR

RUMBLE STRIPS
DEPTH AND
LOCATION DETAILS

STANDARD DRAWING TITLE

STD. DWG. NO.
PV 6B

28-NOV-2016 DGN File:L:\Standard Drawings\Imperial\2017 Approved\1-All Drawings\PV06B.dgn

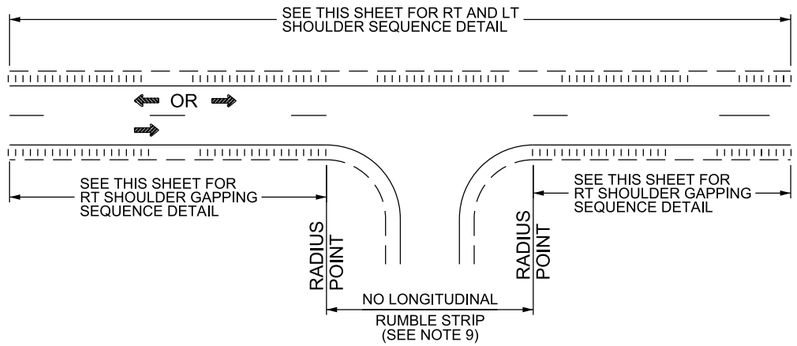

TYPICAL SHOULDER INSTALLATION AT DRIVEWAY OR ACCESS DETAIL

USE CONTINUOUS RUMBLE STRIP ON LEFT
SHOULDER IN ONE WAY TRAFFIC SITUATIONS

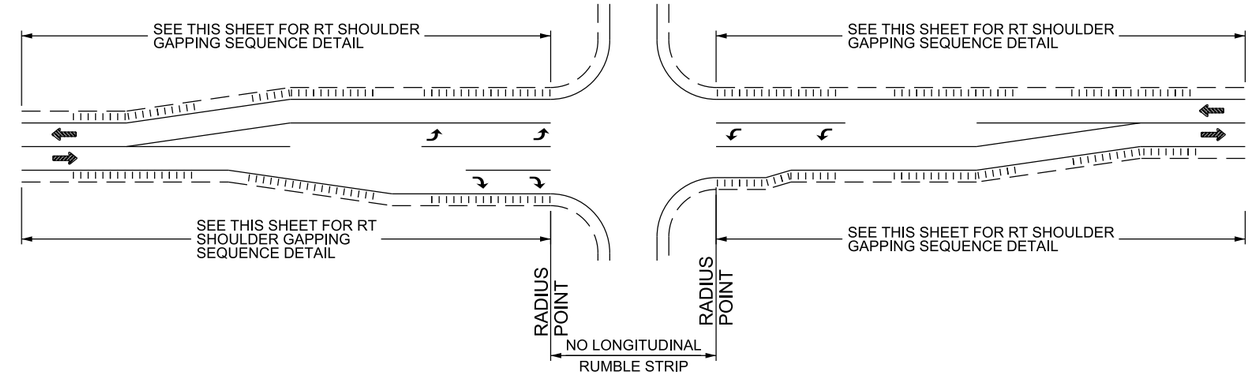

TYPICAL SHOULDER INSTALLATION AT INTERSECTION DETAIL

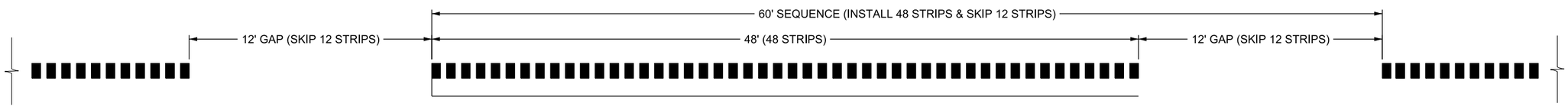

TYPICAL RIGHT SHOULDER GAPPING SEQUENCE DETAIL

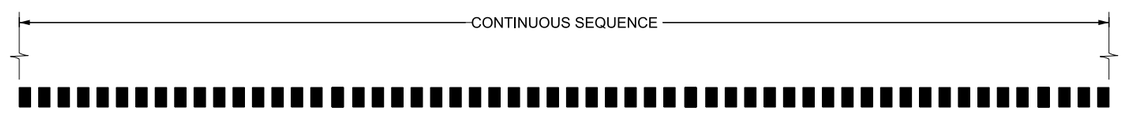

TYPICAL LEFT SHOULDER CONTINUOUS SEQUENCE DETAIL

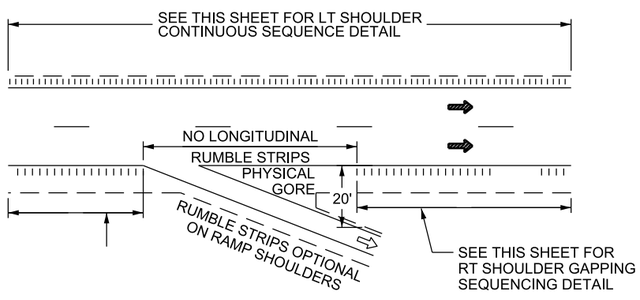

TYPICAL SHOULDER INSTALLATION ON EXIT RAMP DETAIL ENTRANCE RAMP SIMILAR

NOTES:

1. DO NOT PLACE RUMBLE STRIPS ON STRUCTURES OR APPROACH SLABS.
2. DO NOT PLACE RUMBLE STRIPS WITHIN 6 INCHES OF PCCP TRANSVERSE JOINTS.
3. APPLY FLUSH OR SEAL COAT UNIFORMLY ON ALL RUMBLE STRIPS ON BITUMINOUS PAVEMENT SURFACES. SEE STANDARD SPECIFICATION 02761.
4. MILL RUMBLE STRIPS TO LEAVE A RECTANGULAR SHAPE WITH UNIFORM EDGES. DO NOT DAMAGE ADJACENT PAVEMENT DURING MILLING OPERATION.
5. RESTART RUMBLE STRIP SEQUENCE (SEE STD DWG PV 7A & 7B) WHEN RUMBLE STRIPS ARE HALTED OR INTERRUPTED, EXCEPT WHEN TRANSVERSE JOINTS ARE ENCOUNTERED ON PCCP, MANUALLY INTERRUPT SEQUENCE SO RUMBLE STRIPS DO NOT GO THROUGH TRANSVERSE JOINT WHILE MAINTAINING SEQUENCE LENGTH.
6. INSTALL RUMBLE STRIPS ONLY WHERE A MINIMUM UNINTERRUPTED LENGTH OF 100 FT CAN BE INSTALLED. DISCONTINUE RUMBLE STRIPS WHEN SHOULDER WIDTH VARIES AND WHEN WIDTH IS LESS THAN SHOWN IN RUMBLE STRIP TABLES. RESUME WHEN WIDTH IS SUFFICIENT AS SHOWN IN RUMBLE STRIP TABLES, FOR MORE THAN A 100 FT IN LENGTH.
7. SEE STD DWG PV 6A FOR RUMBLE STRIP TABLES WITH GROOVE WIDTH AND LOCATION.
8. SEE STD DWG PV 6B FOR RUMBLE STRIP MILL DETAILS.
9. DO NOT PLACE SHOULDER RUMBLE STRIPS THROUGH INTERSECTIONS. DO NOT PLACE SHOULDER RUMBLE STRIPS THROUGH DRIVEWAYS AND ACCESSES WITH NON-CONTINUOUS EDGE LINES. INSTALL SHOULDER RUMBLE STRIP THROUGH DRIVEWAYS AND ACCESSES WITH CONTINUOUS EDGE LINES. SEE DETAILS ON THIS SHEET.
10. SEE STD DWG PV 7B FOR CENTER LINE RUMBLE STRIP APPLICATIONS.

REVISIONS

NO.	DATE	APPR.	REMARKS

UTAH DEPARTMENT OF TRANSPORTATION
STANDARD DRAWINGS FOR ROAD AND BRIDGE CONSTRUCTION
SALT LAKE CITY, UTAH

RECOMMENDED FOR APPROVAL — JAN.01.2017 DATE
CHAIRMAN STANDARDS COMMITTEE APPROVED — JAN.01.2017 DATE
DEPUTY DIRECTOR

STANDARD DRAWING TITLE
TYPICAL RUMBLE STRIP SHOULDER SEQUENCING AND APPLICATIONS

STD. DWG. NO.
PV 7A

DGN File:L:\Standard Drawings\Imperial\2017 Approved\1-All Drawings\PV07A.dgn
28-NOV-2016

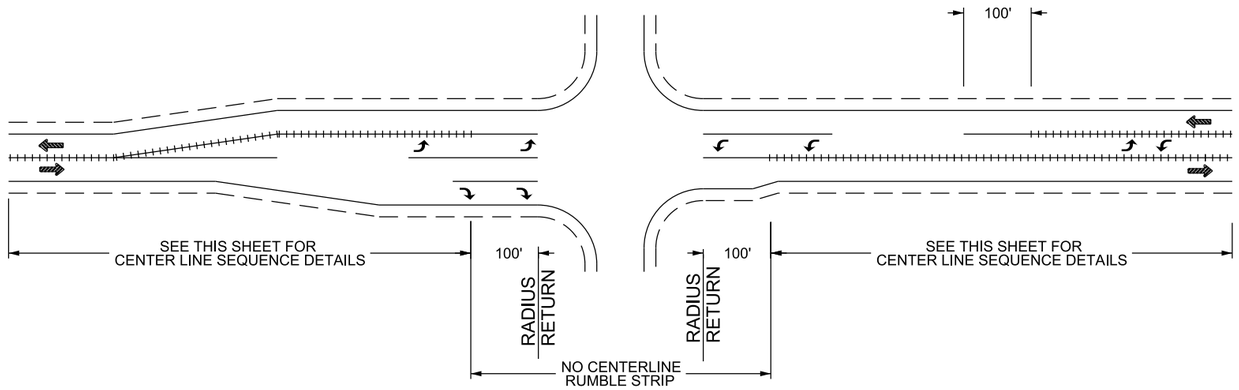

TYPICAL INSTALLATION FOR AN INTERSECTION OR TURN LANE

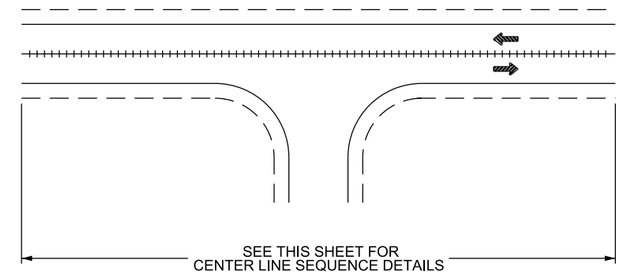

TYPICAL CENTER LINE INSTALLATION AT DRIVEWAYS AND ACCESSES WITH CONTINUOUS CENTER LINE

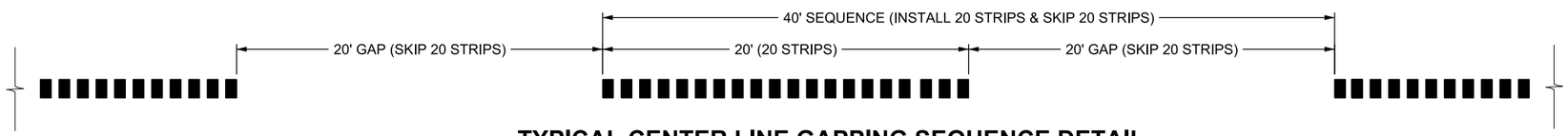

TYPICAL CENTER LINE GAPPING SEQUENCE DETAIL

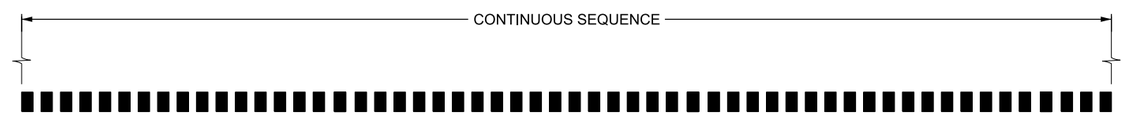

TYPICAL CENTER LINE CONTINUOUS SEQUENCE DETAIL

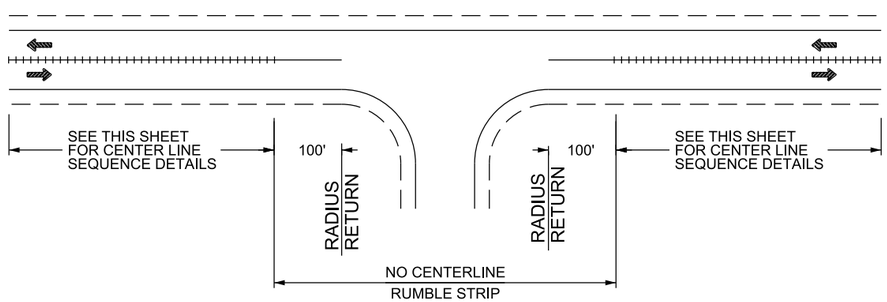

TYPICAL CENTER LINE INSTALLATION AT DRIVEWAY AND ACCESSES WITH NON CONTINUOUS CENTER LINE

NOTES:

1. DO NOT PLACE RUMBLE STRIPS ON STRUCTURES OR APPROACH SLABS.
2. DO NOT PLACE RUMBLE STRIPS WITHIN 6 INCHES OF PCCP TRANSVERSE JOINTS.
3. APPLY FLUSH OR SEAL COAT UNIFORMLY ON ALL RUMBLE STRIPS ON BITUMINOUS PAVEMENT SURFACES. SEE STANDARD SPECIFICATION 02761.
4. MILL RUMBLE STRIPS TO LEAVE A RECTANGULAR SHAPE WITH UNIFORM EDGES. DO NOT DAMAGE ADJACENT PAVEMENT DURING MILLING OPERATION.
5. RESTART RUMBLE STRIP SEQUENCE (SEE STD DWG PV 7A & 7B) WHEN RUMBLE STRIPS ARE HALTED OR INTERRUPTED, EXCEPT WHEN TRANSVERSE JOINTS ARE ENCOUNTERED ON PCCP, MANUALLY INTERRUPT SEQUENCE SO RUMBLE STRIPS DO NOT GO THROUGH TRANSVERSE JOINT WHILE MAINTAINING SEQUENCE LENGTH.
6. SEE STD DWG PV 6A FOR RUMBLE STRIP TABLES WITH GROOVE WIDTH AND LOCATION.
7. SEE STD DWG PV 6B FOR RUMBLE STRIP MILL DETAIL.
8. SEE STD DWG PV 7A & 7B FOR RUMBLE STRIP SEQUENCING.
9. DO NOT PLACE CENTERLINE RUMBLE STRIPS THROUGH INTERSECTIONS. DO NOT PLACE CENTER LINE RUMBLE STRIPS THROUGH DRIVEWAYS AND ACCESSES WITH NON-CONTINUOUS CENTER LINE. PLACE CENTER LINE RUMBLE STRIP THROUGH DRIVEWAYS AND ACCESSES WITH CONTINUOUS CENTER LINE. SEE DETAILS ON THIS SHEET.
10. SEE STD DWG PV 7A FOR SHOULDER RUMBLE STRIP APPLICATIONS.

REVISIONS

NO.	DATE	APPR.	REMARKS

UTAH DEPARTMENT OF TRANSPORTATION
STANDARD DRAWINGS FOR ROAD AND BRIDGE CONSTRUCTION
SALT LAKE CITY, UTAH

RECOMMENDED FOR APPROVAL — JAN.01.2017 DATE
CHAIRMAN STANDARDS COMMITTEE APPROVED — JAN.01.2017 DATE
DEPUTY DIRECTOR

STANDARD DRAWING TITLE
TYPICAL RUMBLE STRIP
CENTER LINE SEQUENCING
AND APPLICATION

STD. DWG. NO.
PV 7B

DGN File:L:\Standard Drawings\Imperial\2017 Approved\1-All Drawings\PV07B.dgn
28-NOV-2016

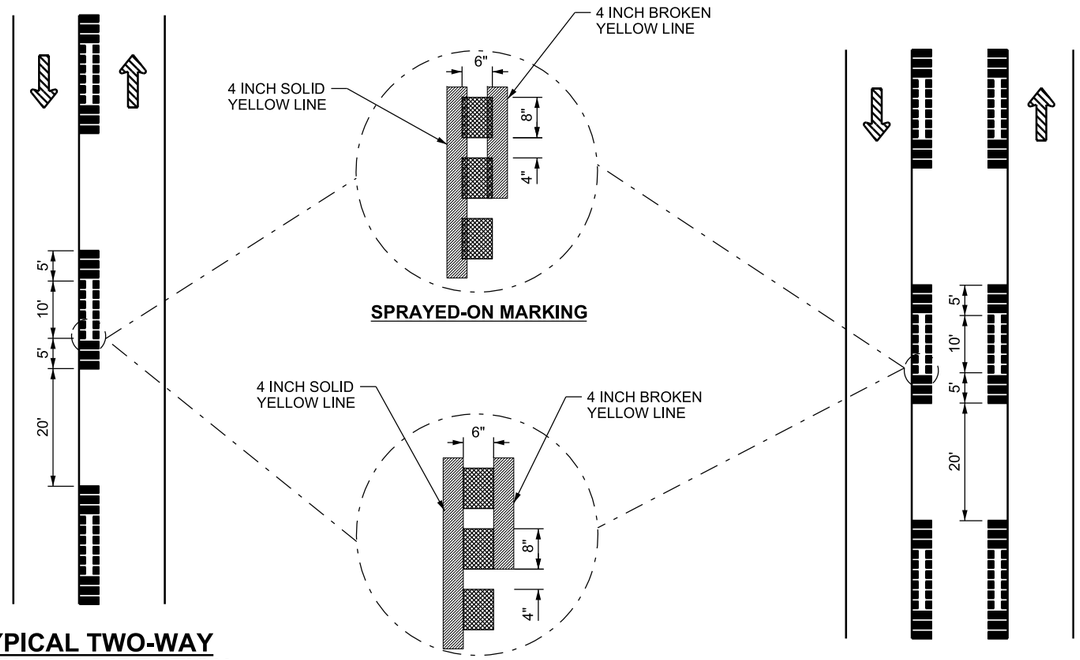

TYPICAL TWO-WAY WITH ONE-DIRECTION NO-PASSING ZONE

TYPICAL TWO-WAY WITH LEFT TURN LANE

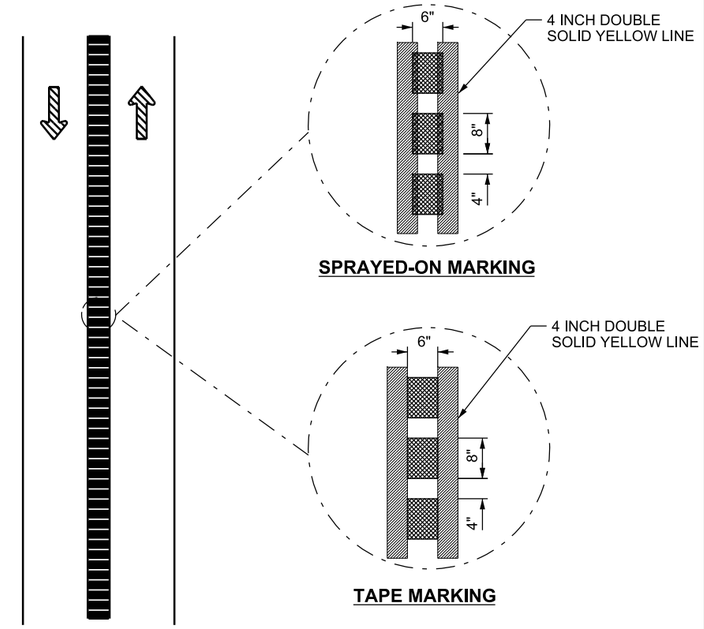

TYPICAL TWO-WAY WITH NO PASSING ZONES

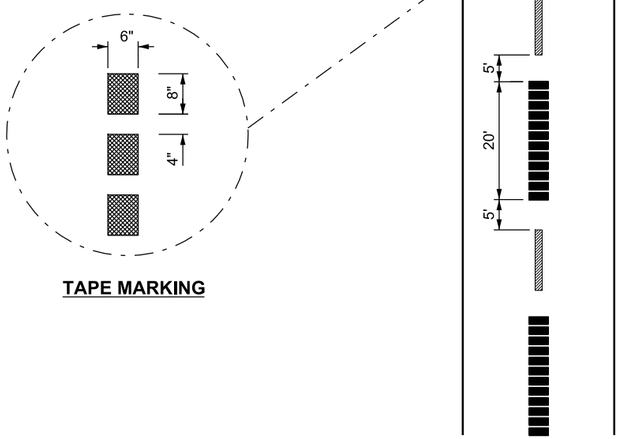

TAPE MARKING

TYPICAL TWO-DIRECTION PASSING ZONE (TAPE MARKING)

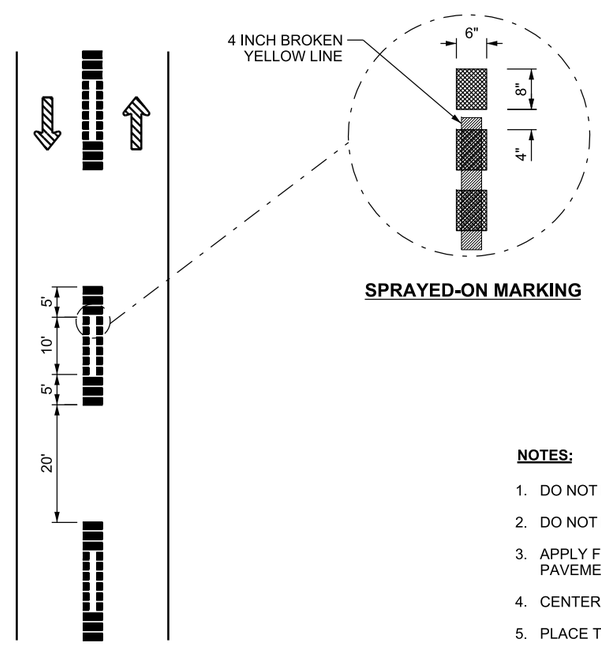

SPRAYED-ON MARKING

TYPICAL TWO-DIRECTION PASSING ZONE (SPRAYED-ON MARKINGS)

NOTES:

1. DO NOT PLACE RUMBLE STRIPS ON STRUCTURES OR APPROACH SLABS.
2. DO NOT PLACE RUMBLE STRIPS WITHIN 6 INCHES OF PCCP TRANSVERSE JOINTS.
3. APPLY FLUSH OR SEAL COAT UNIFORMLY ON ALL RUMBLE STRIPS ON BITUMINOUS PAVEMENT SURFACES. SEE STANDARD SPECIFICATION 02761.
4. CENTER SPRAYED-ON MARKINGS ON RUMBLE STRIPS.
5. PLACE TAPE MARKINGS MIDWAY BETWEEN BROKEN LINES.
6. SEE STD DWG PV 7B FOR CENTERLINE RUMBLE STRIP DETAIL.

REVISIONS

NO.	DATE	APPR.	REMARKS

UTAH DEPARTMENT OF TRANSPORTATION
STANDARD DRAWINGS FOR ROAD AND BRIDGE CONSTRUCTION
SALT LAKE CITY, UTAH

RECOMMENDED FOR APPROVAL — JAN.01.2017 DATE
CHAIRMAN STANDARDS COMMITTEE APPROVED — JAN.01.2017 DATE
DEPUTY DIRECTOR

TYPICAL RUMBLE STRIP CENTERLINE APPLICATION
STANDARD DRAWING TITLE

STD. DWG. NO.
PV 8

DGN File:L:\Standard Drawings\Imperial\2017 Approved\1-All Drawings\PV08.dgn
28-NOV-2016

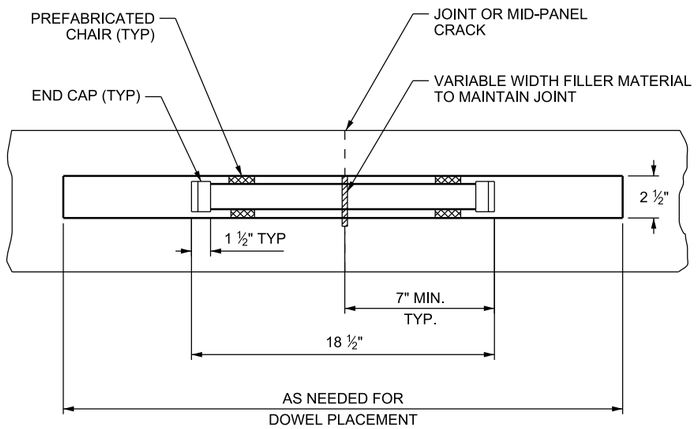

PLAN

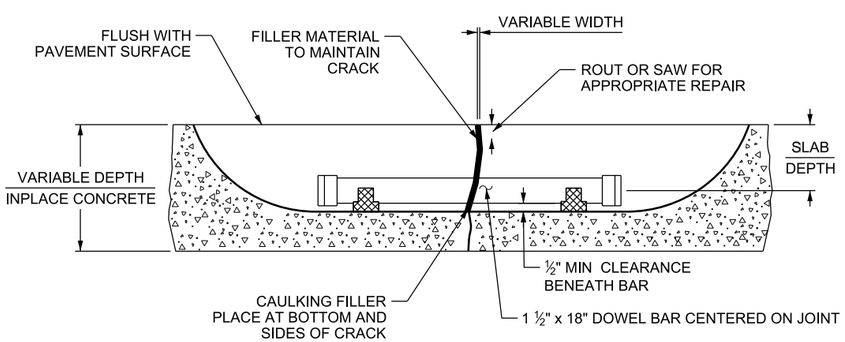

ELEVATION

SEE NOTE 2

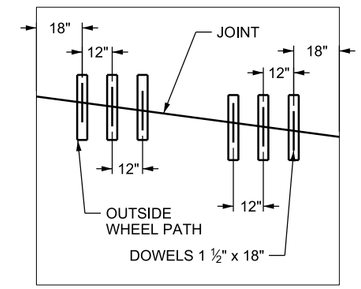

TYPICAL LANE

SEE NOTES 3 & 4

JOINT RETROFIT DOWEL LAYOUT

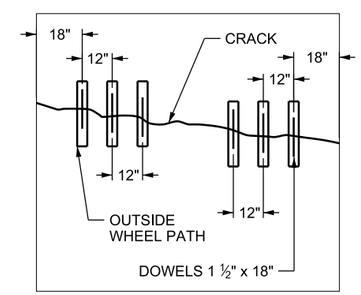

CRACK RETROFIT DOWEL LAYOUT

(FOR MID-PANEL CRACK)

NOTES:

1. THIS REPAIR IS INTENDED TO BE USED TO ESTABLISH AND RESTORE LOAD TRANSFER AT JOINTS OR CRACKS
2. PROVIDE ½ INCH MINIMUM CLEARANCE AROUND BAR EXCEPT FOR DEPTH OF COVER.
3. PROVIDE DOWEL BARS PARALLEL TO THE CENTERLINE AND TO THE PAVEMENT SURFACE.
4. LIMIT DEVIATIONS FROM PARALLEL TO ¼ INCH IN THE LENGTH OF THE DOWEL BARS.

REVISIONS

NO.	DATE	APPR.	REMARKS

UTAH DEPARTMENT OF TRANSPORTATION
STANDARD DRAWINGS FOR ROAD AND BRIDGE CONSTRUCTION
SALT LAKE CITY, UTAH

RECOMMENDED FOR APPROVAL — JAN.01.2017 DATE
CHAIRMAN STANDARDS COMMITTEE — JAN.01.2017 DATE
DEPUTY DIRECTOR

STANDARD DRAWING TITLE
DOWEL BAR RETROFIT

STD. DWG. NO.
PV 9

DGN File: L:\Standard Drawings\Imperial\2017 Approved\1-All Drawings\PV09.dgn
28-NOV-2016

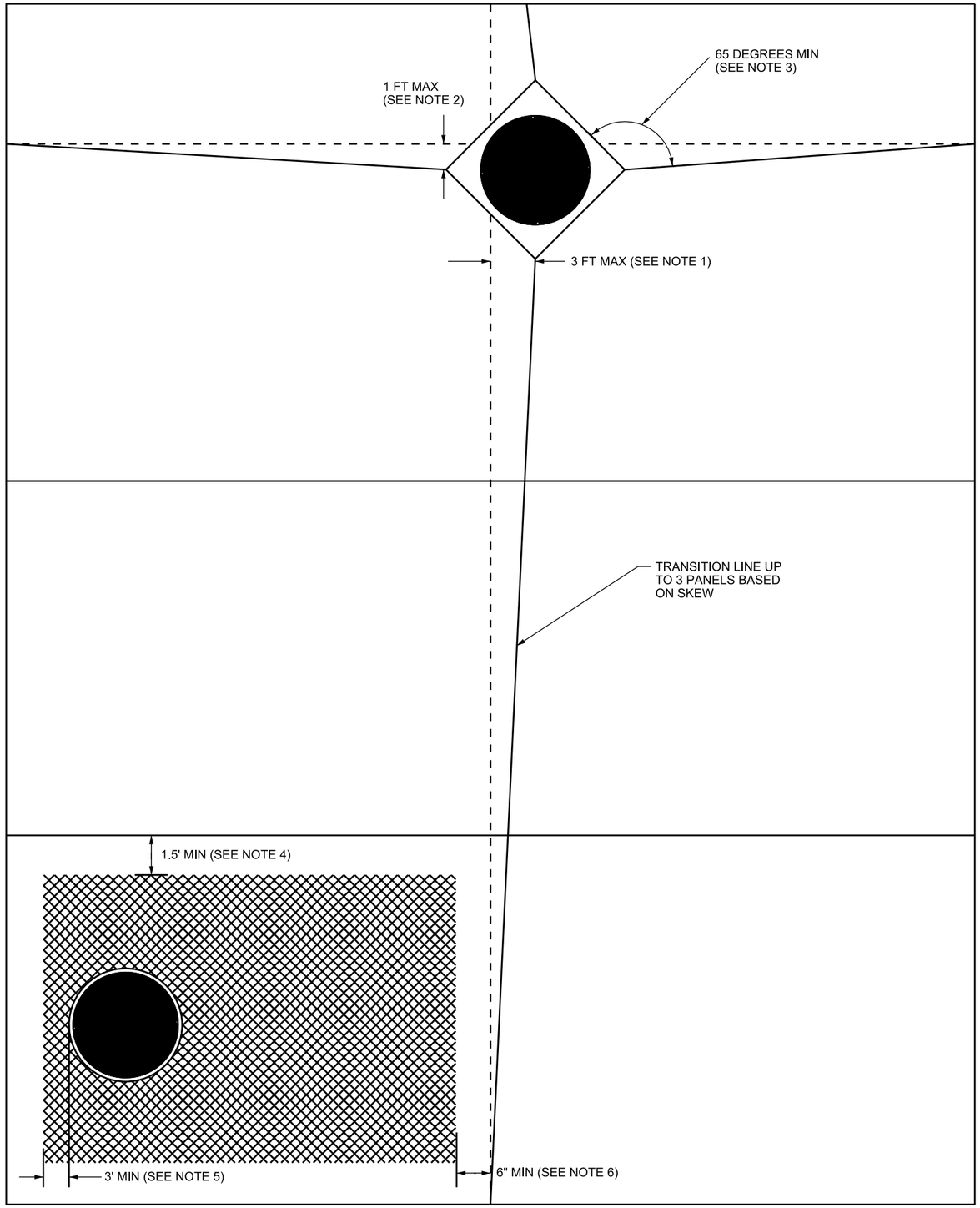

UTILITY ORIENTATION/ADJUSTMENT OPTIONS IN PCCP

NOTES:

OPTION 1: PLACE BLOCKOUT AND ADJUST LONGITUDINAL AND TRANSVERSE JOINTS.

1 - LONGITUDINAL SKEW NO MORE THAN 3 FT.
2 - SKEW TRANSVERSE JOINT UP TO 1 FT OVER 1 PANEL.
3 - ANGLE BETWEEN TRANSVERSE JOINT AND BLOCKOUT TO BE 65 DEGREES OR GREATER.

OPTION 2: PLACE REINFORCING MESH AROUND MANHOLE LID.

4 - 1.5 FT MINIMUM CLEARANCE FROM DOWELED JOINT. DO NOT PLACE MESH ACROSS TRANSVERSE JOINT.
5 - 3 FT MINIMUM MESH COVERAGE FROM LID PERIMETER.
6 - 6 NCHES MINIMUM FROM LONGITUDINAL JOINT.
7 - INSTALLATION DEPTH OF MESH IS MIDSLAB +/- 1.5 INCHES.
8 - USE NO. 6 GAUGE 6 INCHES x 6 INCHES GALVANIZED MESH.

REVISIONS

NO.	DATE	APPR.	REMARKS

UTAH DEPARTMENT OF TRANSPORTATION
STANDARD DRAWINGS FOR ROAD AND BRIDGE CONSTRUCTION
SALT LAKE CITY, UTAH

RECOMMENDED FOR APPROVAL — JAN.01, 2017 DATE
CHAIRMAN STANDARDS COMMITTEE APPROVED — JAN.01, 2017 DATE
DEPUTY DIRECTOR

UTILITY ORIENTATION/ ADJUSTMENT OPTIONS IN PCCP
STANDARD DRAWING TITLE

STD. DWG. NO.
PV 10

DGN File: L:\Standard Drawings\Imperial\2017 Approved\1-All Drawings\PV10.dgn
28-NOV-2016

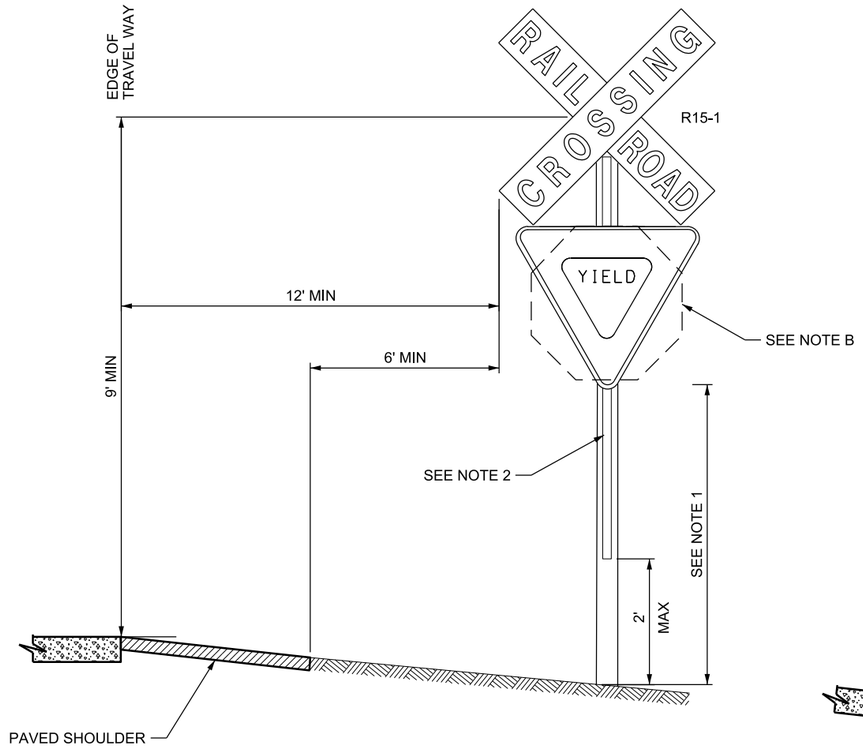

RURAL LOCATION
DETAIL A

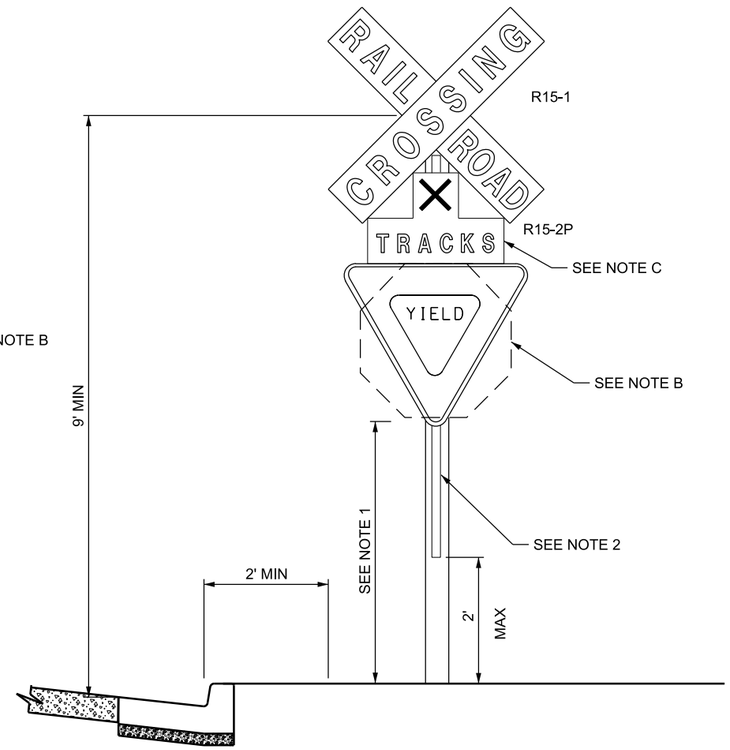

URBAN LOCATION
DETAIL B

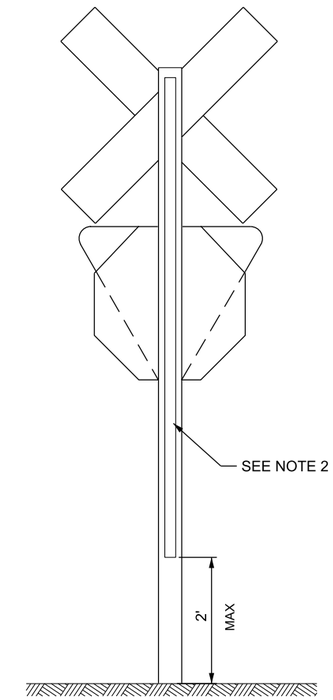

BACK (TYP)
DETAIL C

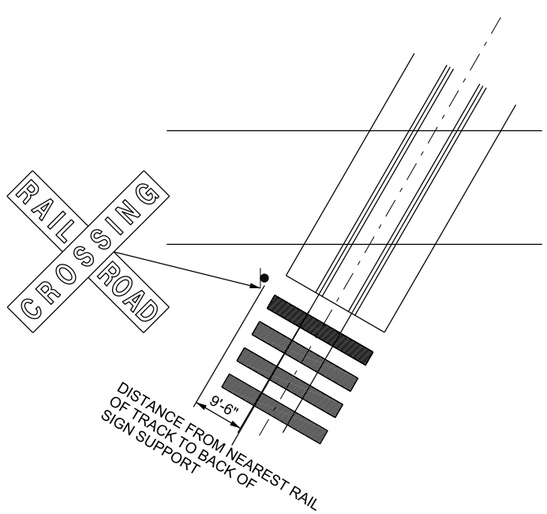

CROSSBUCK PLACEMENT
DETAIL D

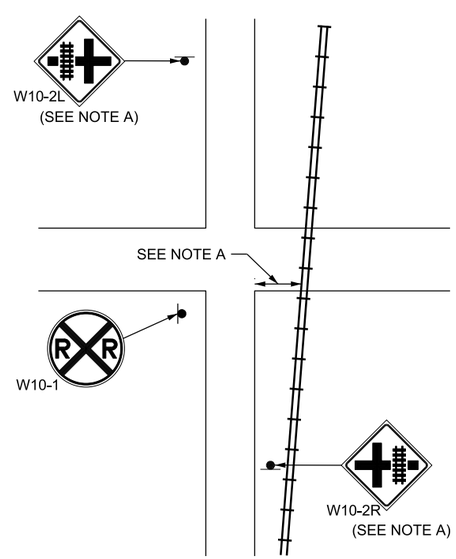

CROSSING NEAR INTERSECTION
DETAIL E

DESIGN-ONLY NOTES:

A. PROVIDE APPROPRIATE W10 SERIES SIGNS WHEN DISTANCE BETWEEN NEAREST RAIL AND EDGE OF ROADWAY IS 100 FT OR LESS.

B. USE YIELD (R1-2) OR STOP (R1-1) SIGNS ONLY AT PASSIVE CROSSINGS, SEE MUTCD.

C. USE NUMBER OF TRACKS (R15-2P) PLAQUE SIGN WHEN MORE THAN ONE TRACK EXISTS.

NOTES:

1. SEE STD DWG SN 7A FOR MOUNTING HEIGHT.

2. PLACE A 2 INCH WIDE WHITE RETROREFLECTIVE STRIP ON BACK AND FRONT OF ALL CROSSBUCK SUPPORTS.

REVISIONS

NO.	DATE	APPR.	REMARKS

UTAH DEPARTMENT OF TRANSPORTATION
STANDARD DRAWINGS FOR ROAD AND BRIDGE CONSTRUCTION
SALT LAKE CITY, UTAH

RECOMMENDED FOR APPROVAL — JAN. 01, 2017 DATE
CHAIRMAN STANDARDS COMMITTEE APPROVED — JAN. 01, 2017 DATE
DEPUTY DIRECTOR

STANDARD DRAWING TITLE
SIGNS AT RAILROAD CROSSING

STD. DWG. NO.
RR 1

28-NOV-2016 14:27 bbyeates DGN File: 1:\Standard Drawings\Imperial\2017 Approved\1-All Drawings\RR01.dgn

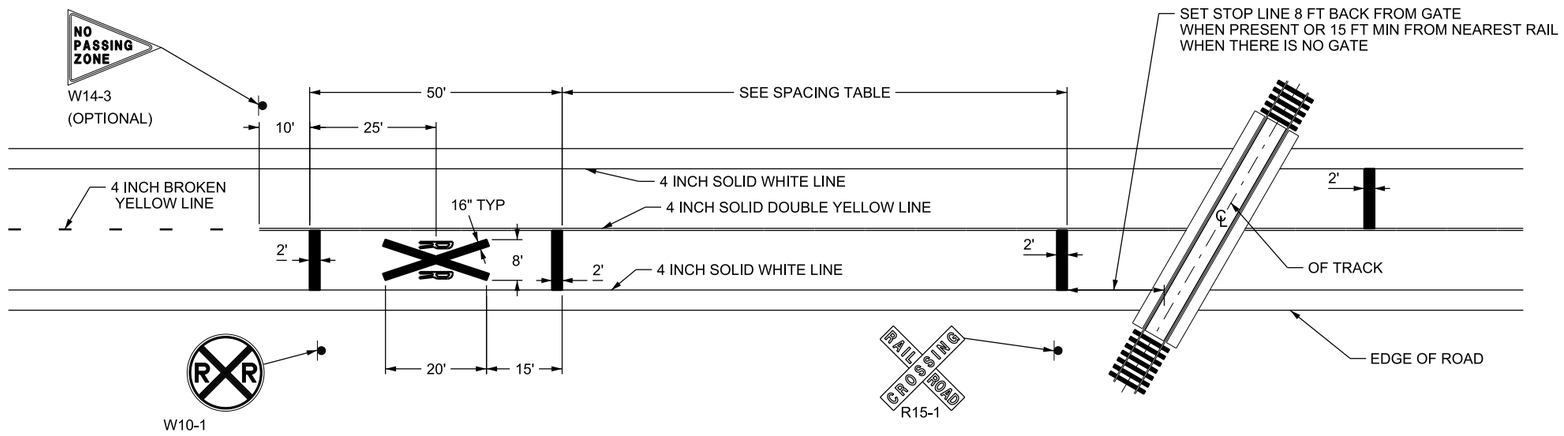

TWO LANE FACILITY
DETAIL A

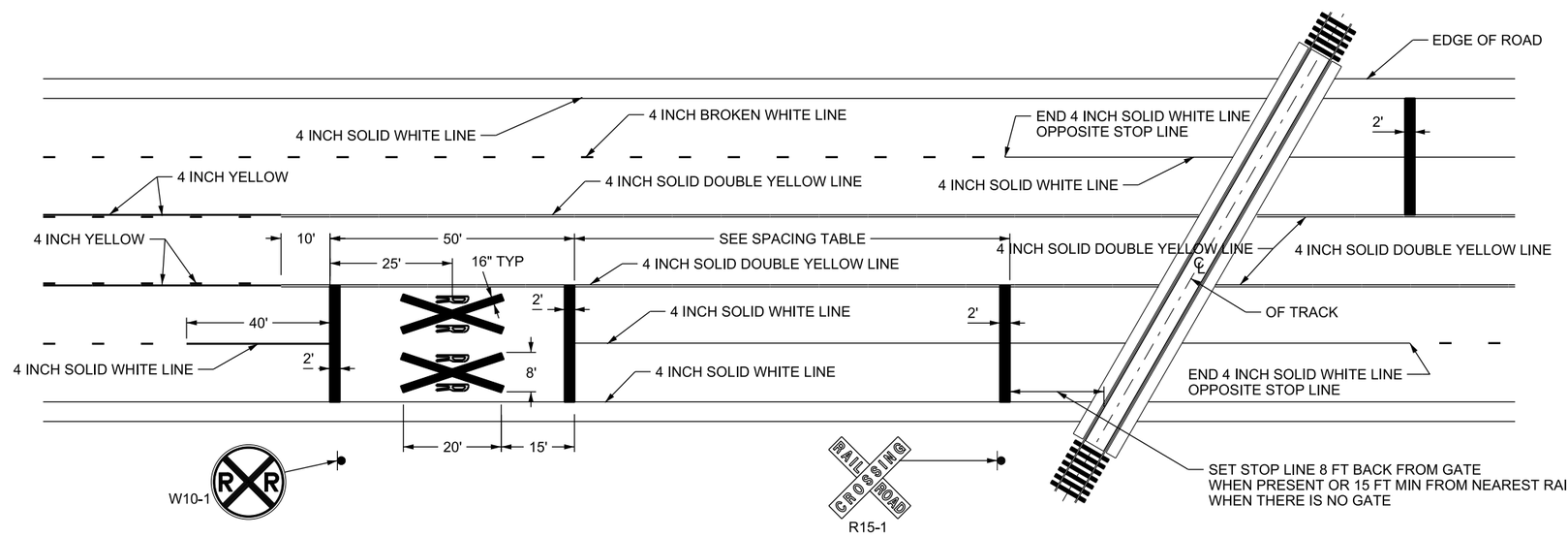

MULTI-LANE FACILITY
DETAIL B

SPACING TABLE	
SPEED LIMIT MPH	MIN DISTANCE (FT)
65 - 70	750
55 - 60	550
45 - 50	375
35 - 40	225
25 - 30	100

NOTES:

1. PLACE PAVEMENT MARKINGS CONSISTING OF AN "RXR," TRANSVERSE LINES, AND NO-PASSING MARKINGS. USE MARKINGS IN EACH APPROACH LANE ON ALL PAVED APPROACHES TO GRADE CROSSING WHERE GRADE CROSSING SIGNALS OR AUTOMATIC GATES ARE PRESENT AND AT ALL OTHER GRADE CROSSINGS WHERE THE POSTED SPEED IS 40 MPH OR GREATER. PLACE PAVEMENT MARKINGS AT OTHER CROSSINGS AS DIRECTED BY THE REGION TRAFFIC ENGINEER.
2. EXTEND TRANSVERSE LINES ACROSS ALL APPROACH LANES ON MULTI-LANE ROADS. USE INDIVIDUAL "RXR" MARKINGS IN EACH APPROACH LANE.
3. USE THE STANDARD HIGHWAY SIGNS AND MARKING BOOK FOR DIMENSIONS OF "RXR" PAVEMENT MARKINGS.
4. SEE STD DWG RR 1 FOR ALL SIGN DETAILS AND INSTALLATION INFORMATION.

REVISIONS

NO.	DATE	APPR.	REMARKS

UTAH DEPARTMENT OF TRANSPORTATION
STANDARD DRAWINGS FOR ROAD AND BRIDGE CONSTRUCTION
SALT LAKE CITY, UTAH

RECOMMENDED FOR APPROVAL — JAN. 01, 2017 DATE
CHAIRMAN STANDARDS COMMITTEE APPROVED — JAN. 01, 2017 DATE
DEPUTY DIRECTOR

STANDARD DRAWING TITLE
PAVEMENT MARKINGS AT RAILROAD CROSSING

STD. DWG. NO.
RR 2

28-NOV-2016 DGN File: L:\Standard_Drawings\Imperial\2017 Approved\1-All Drawings\RR02.dgn

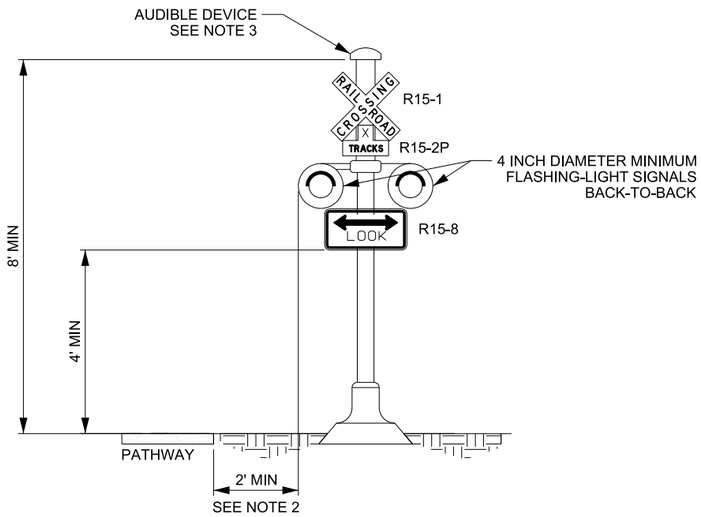

PATHWAY FLASHING-LIGHT SIGNALS
DETAIL A

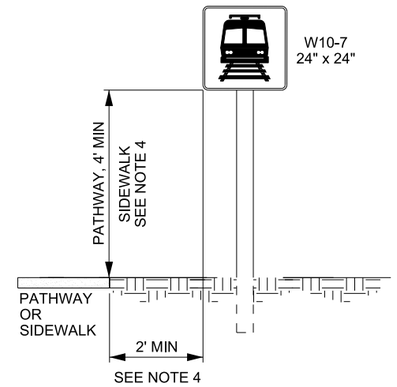

TRAIN ACTIVATED
BLANKOUT SIGN
DETAIL B

TABLE 1		
SIGN SIZES		
SIGN	DETAIL A	DETAIL C
R15-1	24" X 4 1/2"	48" X 9"
R15-2P	13 1/2" x 9"	27" x 18"
R15-8	18" x 9"	36" x 18"

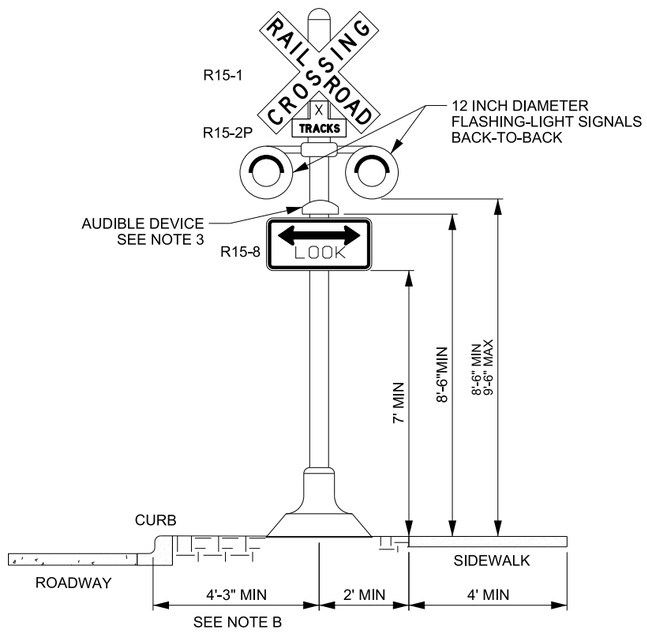

SHARED ROADWAY/PEDESTRIAN
FLASHING-LIGHT SIGNALS
DETAIL C

DESIGN-ONLY NOTES:

A. DEFINITIONS:
1. STREET RUNNING ALIGNMENT - A RAILROAD ALIGNMENT IN WHICH TRAINS OPERATE IN MIXED TRAFFIC WITH ALL TYPES OF ROAD USERS. THE ALIGNMENT IS TYPICALLY SEPARATED FROM TRAFFIC BY A CURB OR STRIPING.
2. SEMI-EXCLUSIVE ALIGNMENT - A RAILROAD ALIGNMENT THAT IS IN A SEPARATE RIGHT-OF-WAY OR ALONG A ROADWAY WHERE MOTOR VEHICLES, PEDESTRIANS, AND BICYCLES HAVE LIMITED ACCESS AND CROSS AT DESIGNATED LOCATIONS ONLY. THE ALIGNMENT IS TYPICALLY SEPARATED BY FENCING OR BARRIERS BETWEEN CROSSINGS.
3. DYNAMIC ENVELOPE - THE CLEARANCE REQUIRED FOR THE TRAIN OR LIGHT RAIL TRANSIT EQUIPMENT OVERHANG.
4. SIDEWALK - THAT PORTION OF A STREET BETWEEN THE CURB LINE OR THE LATERAL LINE OF A ROADWAY AND THE ADJACENT PROPERTY LINE THAT IS PAVED OR IMPROVED AND INTENDED FOR USE BY PEDESTRIANS.
5. PATHWAY - A PUBLIC WAY OUTSIDE OF THE TRAVELED WAY AND PHYSICALLY SEPARATED FROM THE ROADWAY BY OPEN SPACE OR BARRIER. PATHWAYS DO NOT INCLUDE SIDEWALKS.
6. PEDESTRIAN ACCESS ROUTE - CAN BE EITHER A SIDEWALK OR A PATHWAY.

B. USE A LATERAL OFFSET OF A MINIMUM OF 4 FT 3 INCHES FROM THE FACE OF CURB AND A MINIMUM OF 8 FT 3 INCHES FROM THE EDGE OF THE TRAVELED WAY TO THE CENTER OF THE VEHICLE GATE SIGNAL POLE WHEN NO CURB IS PRESENT.

C. USE A NUMBER OF TRACKS (R15-2P) PLAQUE WHEN THERE IS MORE THAN 1 TRACK.

D. SEE TABLE 1 FOR SIGN SIZES.

NOTES:

1. DIRECT FLASHING-LIGHT SIGNALS TO ALL PEDESTRIAN APPROACHES. INSTALL ADDITIONAL FLASHING-LIGHT SIGNALS AS NECESSARY.

2. MAY USE A LATERAL OFFSET OF 2 FT TO THE CENTER OF THE SIGNAL POLE WHEN THE MOUNTING HEIGHT OF THE LOOK (R15-8) SIGN ADJACENT TO A PATHWAY IS 8 FT OR GREATER.

3. PLACE THE AUDIBLE DEVICE ON THE FRONT SIDE OF THE POLE WHERE IT DOES NOT CONFLICT WITH THE SIGNS OR FLASHING-LIGHT SIGNALS.

4. SEE STD DWG SN 7A FOR MOUNTING HEIGHT AND LATERAL OFFSET WHEN THE W10-7 BLANKOUT SIGN IS USED AT A LOCATION OTHER THAN A PATHWAY SUCH AS A SIDEWALK, A STATION PLATFORM OR A ROADWAY.

REVISIONS

NO.	DATE	APPR.	REMARKS

UTAH DEPARTMENT OF TRANSPORTATION
STANDARD DRAWINGS FOR ROAD AND BRIDGE CONSTRUCTION
SALT LAKE CITY, UTAH

RECOMMENDED FOR APPROVAL — JAN. 01, 2017 DATE
CHAIRMAN STANDARDS COMMITTEE APPROVED — JAN. 01, 2017 DATE
DEPUTY DIRECTOR

STANDARD DRAWING TITLE
ACTIVE PEDESTRIAN CONTROLS FOR RAILROAD CROSSINGS SHEET 1 OF 2

STD. DWG. NO.
RR 3A1

28-NOV-2016 14:27 bbyeates DGN File: L:\Standard Drawings\Imperial\2017 Approved\1-4\Drawings\RR03A1.dgn

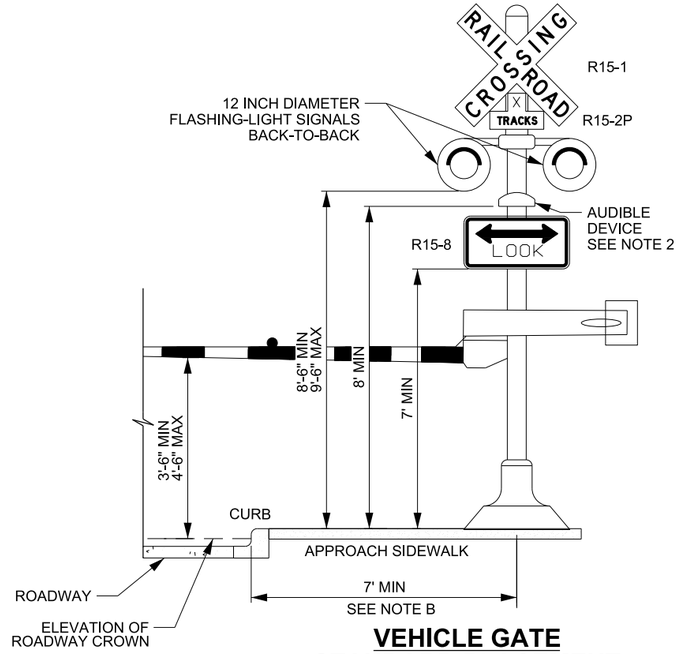

VEHICLE GATE
STANDARD PLACEMENT
DECISION AREA <10'
DETAIL D
SEE NOTE C AND D

TABLE 2			
SIGN SIZES			
SIGN	DETAIL D	DETAIL E	DETAIL F
R15-1	48" X 9"	48" X 9"	48" X 9"
R15-2P	27" x 18"	27" x 18"	27" x 18"
R15-8	36" x 18"	36" x 18"	36" x 18"

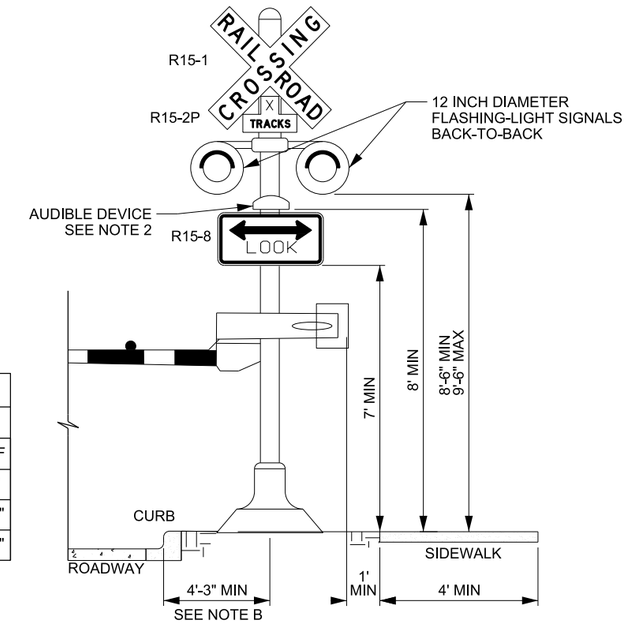

VEHICLE GATE
ALTERNATE PLACEMENT
DETAIL E
SEE NOTE C

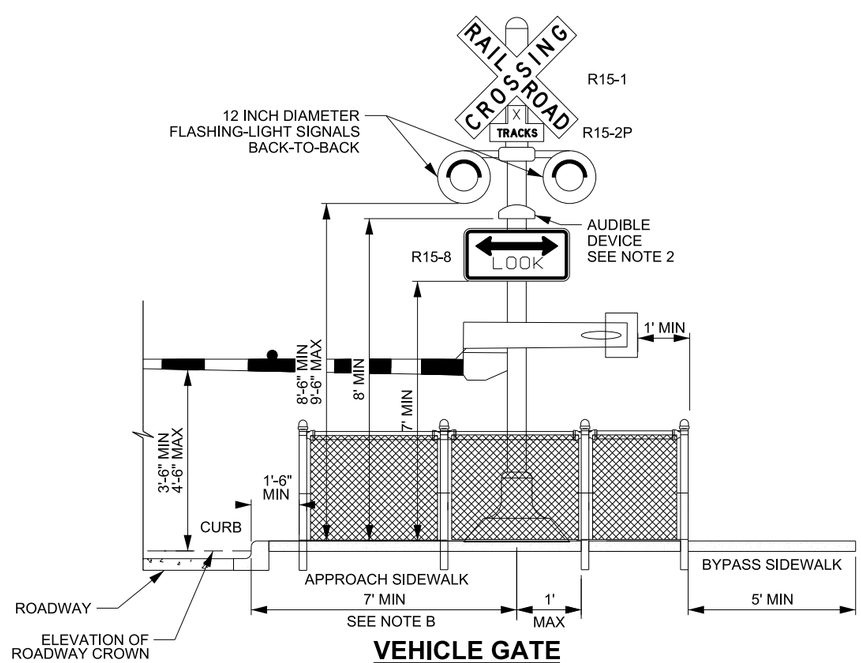

VEHICLE GATE
STANDARD PLACEMENT
DECISION AREA ≥10'
DETAIL F
SEE NOTE C AND D

DESIGN-ONLY NOTES:

A. DEFINITIONS:
1. STREET RUNNING ALIGNMENT - A RAILROAD ALIGNMENT IN WHICH TRAINS OPERATE IN MIXED TRAFFIC WITH ALL TYPES OF ROAD USERS. THE ALIGNMENT IS TYPICALLY SEPARATED FROM TRAFFIC BY A CURB OR STRIPING.
2. SEMI-EXCLUSIVE ALIGNMENT - A RAILROAD ALIGNMENT THAT IS IN A SEPARATE RIGHT-OF-WAY OR ALONG A ROADWAY WHERE MOTOR VEHICLES, PEDESTRIANS, AND BICYCLES HAVE LIMITED ACCESS AND CROSS AT DESIGNATED LOCATIONS ONLY. THE ALIGNMENT IS TYPICALLY SEPARATED BY FENCING OR BARRIERS BETWEEN CROSSINGS.
3. DYNAMIC ENVELOPE - THE CLEARANCE REQUIRED FOR THE TRAIN OR LIGHT RAIL TRANSIT EQUIPMENT OVERHANG.
4. SIDEWALK - THAT PORTION OF A STREET BETWEEN THE CURB LINE OR THE LATERAL LINE OF A ROADWAY AND THE ADJACENT PROPERTY LINE THAT IS PAVED OR IMPROVED AND INTENDED FOR USE BY PEDESTRIANS.
5. PATHWAY - A PUBLIC WAY OUTSIDE OF THE TRAVELED WAY AND PHYSICALLY SEPARATED FROM THE ROADWAY BY OPEN SPACE OR BARRIER. PATHWAYS DO NOT INCLUDE SIDEWALKS.
6. PEDESTRIAN ACCESS ROUTE - EITHER A SIDEWALK OR A PATHWAY.

B. USE A LATERAL OFFSET OF A MINIMUM OF 4 FT 3 INCHES FROM THE FACE OF CURB AND A MINIMUM OF 8 FT 3 INCHES FROM THE EDGE OF THE TRAVELED WAY TO THE CENTER OF THE VEHICLE GATE SIGNAL POLE WHEN NO CURB IS PRESENT.

C. LOCATE VEHICLE GATES BEHIND THE SIDEWALK UNLESS SITE SPECIFIC CONDITIONS RESTRICT GATE ARM LENGTHS SUCH AS OVERHEAD UTILITIES, MULTIPLE TRAFFIC LANES, OR CONDITIONS THAT REQUIRE A GATE LONGER THAN 32 FT. LOCATE VEHICLE GATES IN FRONT OF THE SIDEWALK ACCORDING TO THE ALTERNATE PLACEMENT (DETAIL E) IF SITE SPECIFIC CONDITIONS PREVENT STANDARD PLACEMENT OF VEHICLE GATES BEHIND THE SIDEWALK (DETAILS D AND F).

D. SEE STD DWG RR 5A2 FOR DECISION AREA DETAILS.

E. SEE STD DWG RR 4A2 FOR CHANNELIZING BARRIER OR FENCE DETAILS.

NOTES:

1. DIRECT FLASHING-LIGHT SIGNALS TO ALL PEDESTRIAN APPROACHES. INSTALL ADDITIONAL FLASHING-LIGHT SIGNALS AS NECESSARY.

2. PLACE THE AUDIBLE DEVICE ON THE FRONT SIDE OF THE POLE WHERE IT DOES NOT CONFLICT WITH THE SIGNS OR FLASHING-LIGHT SIGNALS.

REVISIONS

NO.	DATE	APPR.	REMARKS

UTAH DEPARTMENT OF TRANSPORTATION
STANDARD DRAWINGS FOR ROAD AND BRIDGE CONSTRUCTION
SALT LAKE CITY, UTAH

RECOMMENDED FOR APPROVAL — JAN. 01, 2017 DATE
CHAIRMAN STANDARDS COMMITTEE APPROVED — JAN. 01, 2017 DATE
DEPUTY DIRECTOR

ACTIVE PEDESTRIAN CONTROLS FOR RAILROAD CROSSINGS SHEET 2 OF 2
STANDARD DRAWING TITLE

STD. DWG. NO.
RR 3A2

28-NOV-2016 14:27 bbyeates DGN File: L:\Standard Drawings\Imperial\2017 Approved\1-4\Drawings\RR03A2.dgn

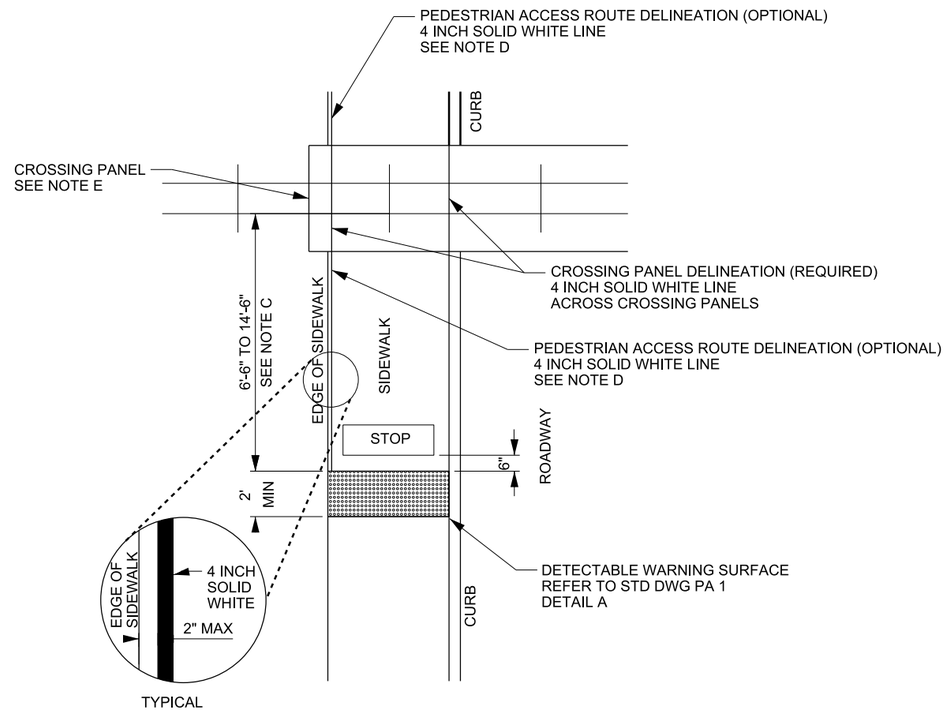

PLACEMENT OF DETECTABLE WARNING SURFACE (PERPENDICULAR CROSSING) DETAIL A

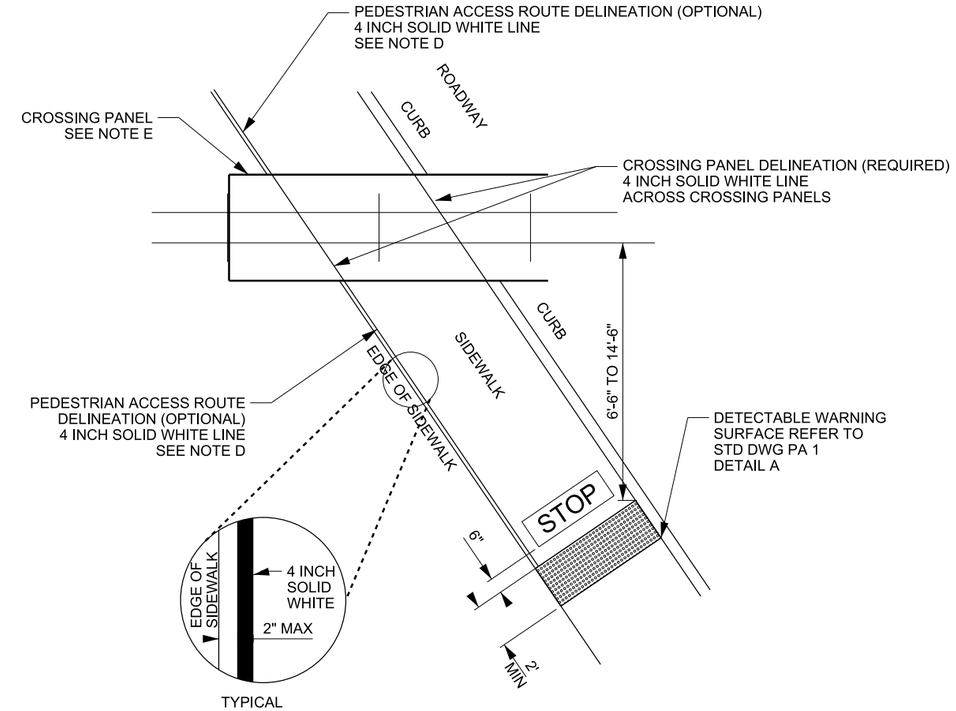

PLACEMENT OF DETECTABLE WARNING SURFACE (SKEWED CROSSING) DETAIL B

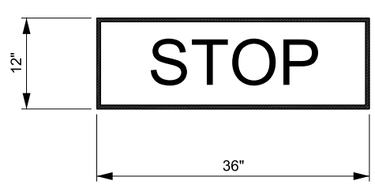

"STOP" PAVEMENT MARKING DETAIL C

SEE NOTES 1 AND 2

DESIGN-ONLY NOTES:

A. DEFINITIONS:
1. STREET RUNNING ALIGNMENT - A RAILROAD ALIGNMENT IN WHICH TRAINS OPERATE IN MIXED TRAFFIC WITH ALL TYPES OF ROAD USERS. THE ALIGNMENT IS TYPICALLY SEPARATED FROM TRAFFIC BY A CURB OR STRIPING.
2. SEMI-EXCLUSIVE ALIGNMENT - A RAILROAD ALIGNMENT THAT IS IN A SEPARATE RIGHT-OF-WAY OR ALONG A ROADWAY WHERE MOTOR VEHICLES, PEDESTRIANS, AND BICYCLES HAVE LIMITED ACCESS AND CROSS AT DESIGNATED LOCATIONS ONLY. THE ALIGNMENT IS TYPICALLY SEPARATED BY FENCING OR BARRIERS BETWEEN CROSSINGS.
3. DYNAMIC ENVELOPE - THE CLEARANCE REQUIRED FOR THE TRAIN OR LIGHT RAIL TRANSIT EQUIPMENT OVERHANG.
4. SIDEWALK - THAT PORTION OF A STREET BETWEEN THE CURB LINE OR THE LATERAL LINE OF A ROADWAY AND THE ADJACENT PROPERTY LINE THAT IS PAVED OR IMPROVED AND INTENDED FOR USE BY PEDESTRIANS.
5. PATHWAY - A PUBLIC WAY OUTSIDE OF THE TRAVELED WAY AND PHYSICALLY SEPARATED FROM THE ROADWAY BY OPEN SPACE OR BARRIER. PEDESTRIAN ACCESS ROUTES DO NOT INCLUDE SIDEWALKS.
6. PEDESTRIAN ACCESS ROUTE - EITHER A SIDEWALK OR A PEDESTRIAN ACCESS ROUTE.

B. USE "STOP" PAVEMENT MARKING IN STREET RUNNING ALIGNMENTS WHERE THERE IS A STATION ENTRANCE (SEE STD DWG RR 6, DETAIL A, AND STD DWG RR 7, DETAIL A) AND IN SEMI-EXCLUSIVE ALIGNMENTS IN QUADRANTS WHERE PEDESTRIANS ARE NOT CONTROLLED BY GATES.

C. MAXIMIZE SIGHT DISTANCE BY PLACING THE DETECTABLE WARNING SURFACE (DWS) WITHIN THE PRESCRIBED DISTANCES. THE PREFERRED DISTANCE IS 10 FT FROM NEAREST RAIL OR 2 FT FROM FLASHING-LIGHT SIGNALS OR AUTOMATIC GATES. EXTEND DWS FULL WIDTH OF THE PEDESTRIAN ACCESS ROUTE. VERIFY THE DWS IS OUTSIDE THE TRAIN'S DYNAMIC ENVELOPE AND OUTSIDE THE SWING PATH OF VEHICLE OR PEDESTRIAN GATE COUNTERWEIGHTS.

D. DELINEATE PEDESTRIAN ACCESS ROUTE UP TO THE CROSSING PANEL WITH A 4 INCH SOLID WHITE LINE IN SEMI-EXCLUSIVE ALIGNMENTS WHEN PEDESTRIAN ACCESS ROUTE IS NOT OTHERWISE DEFINED THROUGH CONTRASTING COLOR OR TEXTURE. MATCH PEDESTRIAN ACCESS ROUTE DELINEATION TO CROSSING PANEL DELINEATION.

E. EXTEND CROSSING PANEL A MINIMUM OF 2 FT BEYOND SIDEWALK.

NOTES:

1. USE 8 INCH RED LETTERS ON WHITE NON-SLIP THERMOPLASTIC BACKGROUND WITH 1 INCH RED BORDER OR 8 INCH WHITE LETTERS ON RED NON-SLIP THERMOPLASTIC BACKGROUND WITH 1 INCH WHITE BORDER. BOND TO PAVEMENT.

2. DO NOT EXCEED THE ADA THICKNESS REQUIREMENTS OF 1/4 INCH VERTICAL OR 1/2 INCH BEVELED FOR THE STOP PAVEMENT MARKING.

REVISIONS				
NO.	DATE	APPR.	REMARKS	

UTAH DEPARTMENT OF TRANSPORTATION
STANDARD DRAWINGS FOR ROAD AND BRIDGE CONSTRUCTION
SALT LAKE CITY, UTAH

RECOMMENDED FOR APPROVAL — JAN. 01, 2017 DATE
CHAIRMAN STANDARDS COMMITTEE APPROVED — JAN. 01, 2017 DATE
DEPUTY DIRECTOR

STANDARD DRAWING TITLE
PASSIVE PEDESTRIAN CONTROLS FOR RAILROAD CROSSINGS SHEET 1 OF 2

STD. DWG. NO.
RR 4A1

28-NOV-2016 DGN File:L:\Standard Drawings\Imperial\2017 Approved\1-All Drawings\RR04A1.dgn

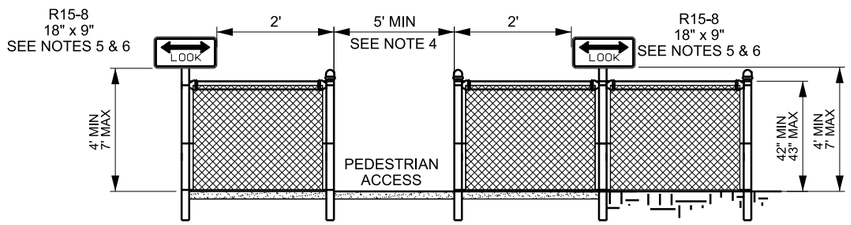

CHANNELIZING FENCE/BARRIER DETAIL D1

SEE NOTES 2 AND B

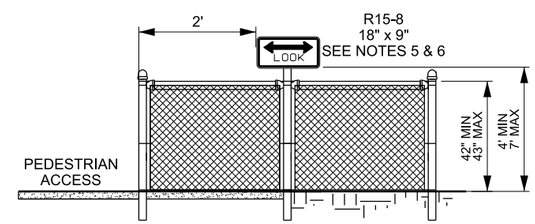

CHANNELIZING FENCE/BARRIER DETAIL D2

SEE NOTES 2 AND B

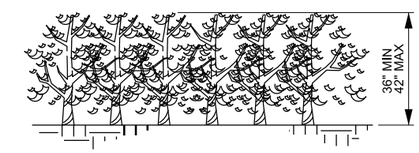

CHANNELIZING LANDSCAPING DETAIL E

SEE NOTE 6

TABLE 1				
SIGN SIZES				
SIGN	DETAIL D1	DETAIL D2	DETAIL F	DETAIL G
R15-1	–	–	24" X 4 1/2"	48" X 9"
R15-2P	–	–	13 1/2" x 9"	27" x 18"
R15-8	18" x 9"	18" x 9"	18" x 9"	36" x 18"

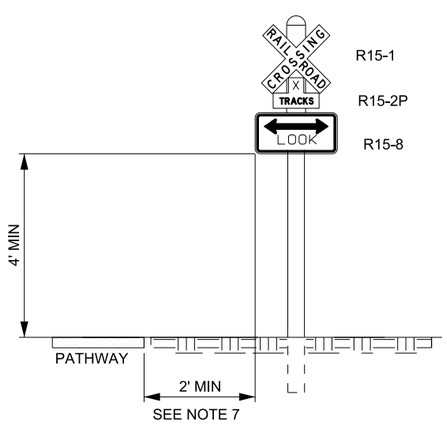

PATHWAY PEDESTRIAN PASSIVE CONTROLS DETAIL F

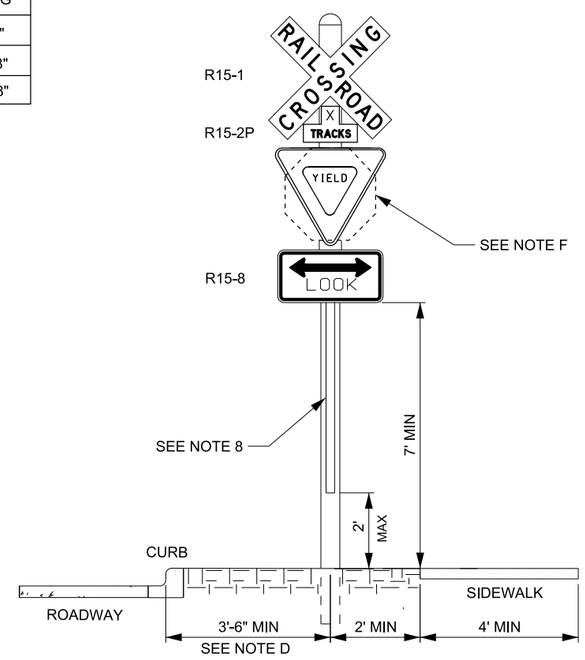

SHARED ROADWAY/PEDESTRIAN PASSIVE CONTROLS DETAIL G

DESIGN-ONLY NOTES:

A. DEFINITIONS:
1. STREET RUNNING ALIGNMENT - A RAILROAD ALIGNMENT IN WHICH TRAINS OPERATE IN MIXED TRAFFIC WITH ALL TYPES OF ROAD USERS. THE ALIGNMENT IS TYPICALLY SEPARATED FROM TRAFFIC BY A CURB OR STRIPING.
2. SEMI-EXCLUSIVE ALIGNMENT - A RAILROAD ALIGNMENT THAT IS IN A SEPARATE RIGHT-OF-WAY OR ALONG A ROADWAY WHERE MOTOR VEHICLES, PEDESTRIANS, AND BICYCLES HAVE LIMITED ACCESS AND CROSS AT DESIGNATED LOCATIONS ONLY. THE ALIGNMENT IS TYPICALLY SEPARATED BY FENCING OR BARRIERS BETWEEN CROSSINGS.
3. DYNAMIC ENVELOPE - THE CLEARANCE REQUIRED FOR THE TRAIN OR LIGHT RAIL TRANSIT EQUIPMENT OVERHANG.
4. SIDEWALK - THAT PORTION OF A STREET BETWEEN THE CURB LINE OR THE LATERAL LINE OF A ROADWAY AND THE ADJACENT PROPERTY LINE THAT IS PAVED OR IMPROVED AND INTENDED FOR USE BY PEDESTRIANS.
5. PATHWAY - A PUBLIC WAY OUTSIDE OF THE TRAVELED WAY AND PHYSICALLY SEPARATED FROM THE ROADWAY BY OPEN SPACE OR BARRIER. PATHWAYS DO NOT INCLUDE SIDEWALKS.
6. PEDESTRIAN ACCESS ROUTE - EITHER A SIDEWALK OR A PATHWAY.

B. USE CHANNELIZING FENCE OR BARRIER TO DEFINE PEDESTRIAN ACCESSES AND TO RESTRICT ERRANT PEDESTRIAN MOVEMENT.

C. USE CHANNELIZING LANDSCAPE TO RESTRICT ERRANT PEDESTRIAN MOVEMENT ONLY. DO NOT USE TO DEFINE PEDESTRIAN ACCESSES.

D. USE A LATERAL OFFSET OF A MINIMUM OF 3 FT 6 INCHES FROM THE FACE OF CURB AND A MINIMUM OF 7 FT 6 INCHES FROM THE EDGE OF THE TRAVELED WAY TO THE CENTER OF THE SIGN POLE WHEN NO CURB IS PRESENT.

E. USE A NUMBER OF TRACKS (R15-2P) PLAQUE WHEN THERE IS MORE THAN 1 TRACK.

F. USE YIELD OR STOP SIGNS ONLY AT PASSIVE CROSSINGS. SEE MUTCD.

G. SEE TABLE 1 FOR SIGN SIZES.

NOTES:

1. ADJUST CHANNELIZATION AND BARRIER LAYOUT SHOWN ON THIS DRAWING AS NECESSARY BASED ON SITE SPECIFIC SITUATIONS, WHILE MAINTAINING COMPLIANCE WITH THE MINIMUMS SHOWN.
2. USE 2 INCH MAXIMUM MESH FOR CHAIN LINK CHANNELIZING FENCES NEAR GRADE CROSSINGS.
3. PLACE FENCE TOP RAIL AS SHOWN IN PLANS.
4. MATCH WIDTH OF PEDESTRIAN ACCESS TO SIDEWALK OR CROSSWALK WIDTH.
5. PLACE LOOK (R15-8) SIGN TO FACE PEDESTRIANS APPROACHING TRACKS ON BOTH SIDES OF THE CROSSING.
6. PLACE TWO LOOK (R15-8) SIGNS BACK TO BACK WHEN CHANNELIZING FENCE OR BARRIER IS INSTALLED BETWEEN TRACKS.
7. MAY USE A LATERAL OFFSET OF 2 FT TO THE CENTER OF THE SIGN POLE WHEN THE MOUNTING HEIGHT OF THE LOOK (R15-8) SIGN ADJACENT TO A PATHWAY IS 8 FT OR GREATER.
8. PLACE A 2 INCH WIDE WHITE RETROREFLECTIVE STRIP ON BACK AND FRONT OF ALL CROSSBUCK SUPPORTS.

REVISIONS

NO.	DATE	APPR.	REMARKS

UTAH DEPARTMENT OF TRANSPORTATION
STANDARD DRAWINGS FOR ROAD AND BRIDGE CONSTRUCTION
SALT LAKE CITY, UTAH

RECOMMENDED FOR APPROVAL — JAN. 01, 2017 DATE
CHAIRMAN STANDARDS COMMITTEE APPROVED — JAN. 01, 2017 DATE
DEPUTY DIRECTOR

STANDARD DRAWING TITLE
PASSIVE PEDESTRIAN CONTROLS FOR RAILROAD CROSSINGS SHEET 2 OF 2

STD. DWG. NO.
RR 4A2

28-NOV-2016 14:27 bbyeates DGN File: L:\Standard Drawings\Ingerdall\2017 Approved\1-All Drawings\RR04A2.dgn

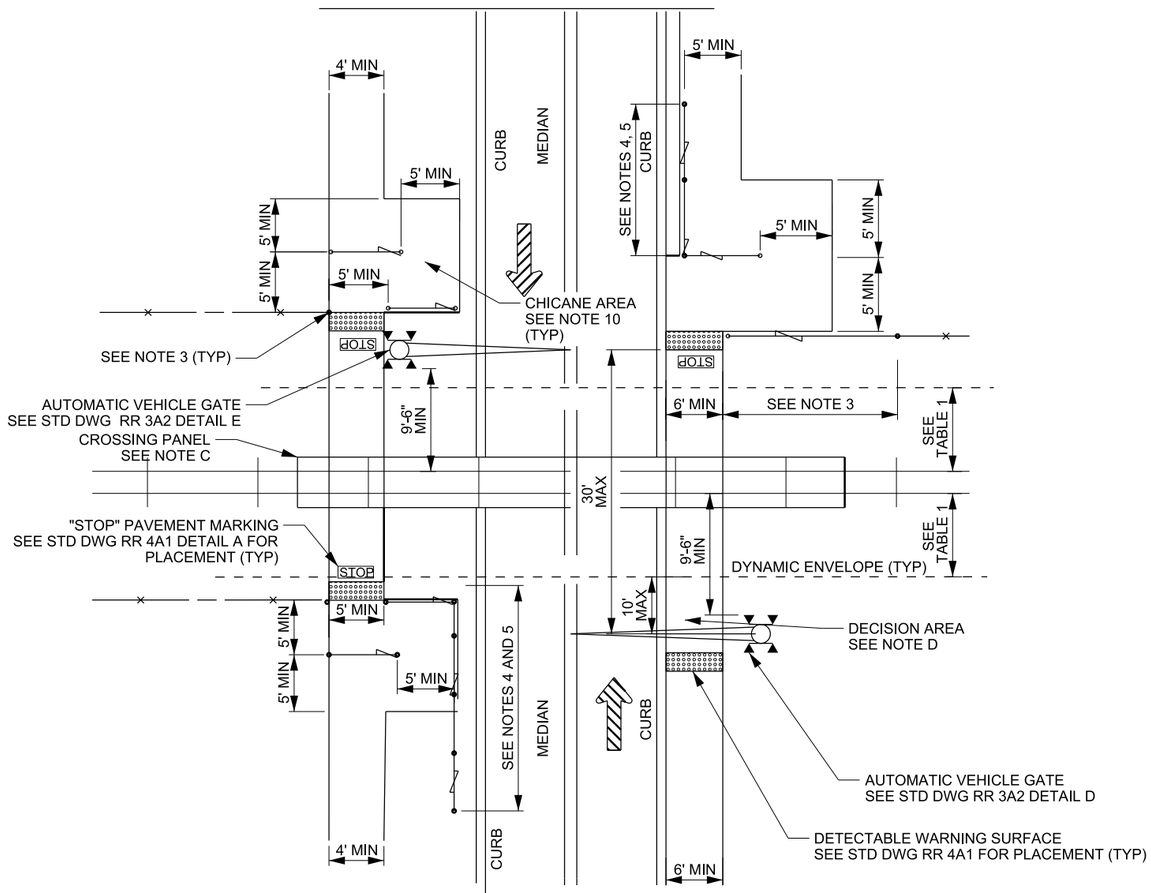

PERPENDICULAR CROSSINGS
DETAIL A

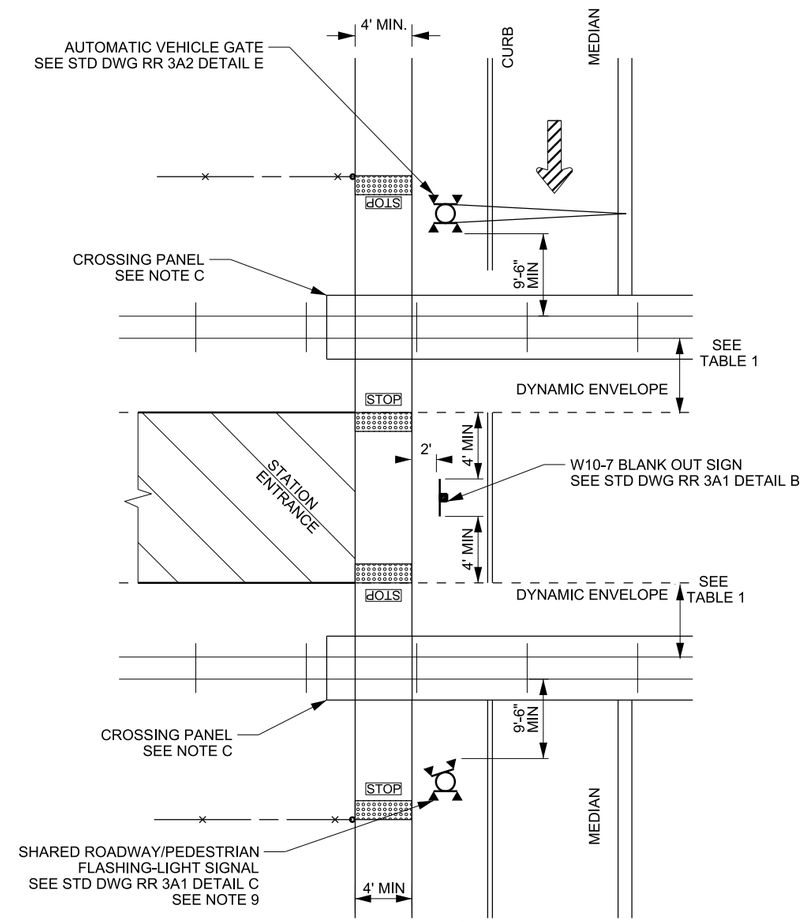

FLASHING-LIGHT SIGNALS
DETAIL B

TABLE 1	
DYNAMIC ENVELOPE WIDTH	
VEHICLE TYPE	WIDTH*
LIGHT RAIL/TROLLEY ONLY	4'-6"
SHARED USE	6'-0"
HEAVY RAIL	6'-0"

* MEASURED FROM EDGE OF NEAREST RAIL

LEGEND:

- CHANNELIZING FENCE/BARRIER OR CHANNELIZING LANDSCAPING SEE STD DWG RR 4A2 DETAILS D1, D2, AND E
- CHANNELIZING FENCE/BARRIER SEE STD DWG RR 4A2 DETAILS D1 AND D2
- RIGHT-OF-WAY FENCE

DESIGN-ONLY NOTES:

A. DEFINITIONS:
1. STREET RUNNING ALIGNMENT - A RAILROAD ALIGNMENT IN WHICH TRAINS OPERATE IN MIXED TRAFFIC WITH ALL TYPES OF ROAD USERS. THE ALIGNMENT IS TYPICALLY SEPARATED FROM TRAFFIC BY A CURB OR STRIPING.
2. SEMI-EXCLUSIVE ALIGNMENT - A RAILROAD ALIGNMENT THAT IS IN A SEPARATE RIGHT -OF-WAY OR ALONG A ROADWAY WHERE MOTOR VEHICLES, PEDESTRIANS, AND BICYCLES HAVE LIMITED ACCESS AND CROSS AT DESIGNATED LOCATIONS ONLY. THE ALIGNMENT IS TYPICALLY SEPARATED BY FENCING OR BARRIERS BETWEEN CROSSINGS.
3. DYNAMIC ENVELOPE - THE CLEARANCE REQUIRED FOR THE TRAIN OR LIGHT RAIL TRANSIT EQUIPMENT OVERHANG.
4. SIDEWALK - THAT PORTION OF A STREET BETWEEN THE CURB LINE, OR THE LATERAL LINE OF A ROADWAY, AND THE ADJACENT PROPERTY LINE THAT IS PAVED OR IMPROVED AND INTENDED FOR USE BY PEDESTRIANS.
5. PATHWAY - A PUBLIC WAY OUTSIDE OF THE TRAVELED WAY AND PHYSICALLY SEPARATED FROM THE ROADWAY BY OPEN SPACE OR BARRIER. PATHWAYS DO NOT INCLUDE SIDEWALKS.
6. PEDESTRIAN ACCESS ROUTE - EITHER A SIDEWALK OR A PATHWAY.

B. PROVIDE DENSE LANDSCAPING WHEN USED IN PLACE OF CHANNELIZING FENCING OR BARRIER TO RESTRICT PEDESTRIANS FROM USING LOCATIONS OTHER THAN PEDESTRIAN ACCESSES.

C. EXTEND CROSSING PANEL A MINIMUM OF 2 FT BEYOND SIDEWALK.

D. INSTALL GATE AND BYPASS ACCORDING TO STD DWG RR 3A2 DETAIL F WHEN THE DISTANCE BETWEEN THE GATE AND THE DYNAMIC ENVELOPE IS GREATER THAN 10 FT OR THE DISTANCE BETWEEN THE DETECTABLE WARNING SURFACE AND THE GATE ON THE OPPOSITE SIDE OF THE CROSSING IS GREATER THAN 30 FT.

NOTES:

1. ADJUST CHANNELIZATION AND BARRIER LAYOUT SHOWN ON THIS SHEET AS NECESSARY BASED ON SITE SPECIFIC CONDITIONS, WHILE MAINTAINING COMPLIANCE WITH THE MINIMUMS SHOWN.
2. ALIGN CROSSING ENTRANCES TO MINIMIZE CROSSING DISTANCE AND MAXIMIZE VISIBLITY IN BOTH DIRECTIONS.
3. EXTEND CHANNELIZING FENCE OR BARRIER PARALLEL TO TRACKS 25 FT MINIMUM OR EXTEND RIGHT-OF-WAY FENCE TO CONTROL DEVICES.
4. EXTEND CHANNELIZING FENCE OR BARRIER PARALLEL TO ROADWAY IN NON-GATED QUADRANTS 25 FT MINIMUM OR TO RIGHT-OF-WAY LIMITS.
5. PLACE CHANNELIZING FENCE OR BARRIER 18 INCHES FROM THE FACE OF CURB OR ADJACENT TO THE SIDEWALK WHICHEVER PROVIDES GREATER CLEARANCE FOR ROAD USERS WHEN CHANNELIZING FENCE OR BARRIER RUNS PARALLEL TO THE ROADWAY.
6. DO NOT OBSTRUCT SIGHT DISTANCE WITH FENCING OR BARRIERS. USE A CHANNELIZING FENCE OR BARRIER WITH A MINIMUM HEIGHT OF 42 INCHES AND A MAXIMUM HEIGHT OF 43 INCHES WHEN NEAR GRADE CROSSINGS.
7. PLACE THE DETECTABLE WARNING SURFACE ACCORDING TO STD DWG RR 4A1, DETAILS A AND B, FOR LOCATIONS OTHER THAN EMERGENCY EXIT SWING GATES, AUTOMATIC VEHICLE GATES, OR ROADWAY/PEDESTRIAN FLASHING-LIGHT SIGNALS.
8. SEE STD DWG RR 4A1 FOR "STOP" PAVEMENT MARKING DETAILS.
9. ANGLE AND LOUVRE BACK FLASHING-LIGHT SIGNALS FOR PEDESTRIAN VISIBILITY ONLY.
10. ADJUST SIDEWALK WIDTH THROUGH CHICANE AREA TO PROVIDE 5 FT MINIMUM GAP BETWEEN FENCE POSTS AND EDGE OF SIDEWALK TO ACCOMODATE BICYCLE TRAFFIC.

REVISIONS

NO.	DATE	APPR.	REMARKS

UTAH DEPARTMENT OF TRANSPORTATION
STANDARD DRAWINGS FOR ROAD AND BRIDGE CONSTRUCTION
SALT LAKE CITY, UTAH

RECOMMENDED FOR APPROVAL — JAN. 01, 2017 DATE
CHAIRMAN STANDARDS COMMITTEE APPROVED — JAN. 01, 2017 DATE
DEPUTY DIRECTOR

PEDESTRIAN CONTROLS
SEMI-EXCLUSIVE
RAILROAD ALIGNMENTS
SHEET 1 OF 2
STANDARD DRAWING TITLE

STD. DWG. NO.
RR 5A1

DGN File:L:\Standard_Drawings\Imperial\2017 Approved\1-All Drawings\RR05A1.dgn
28-NOV-2016

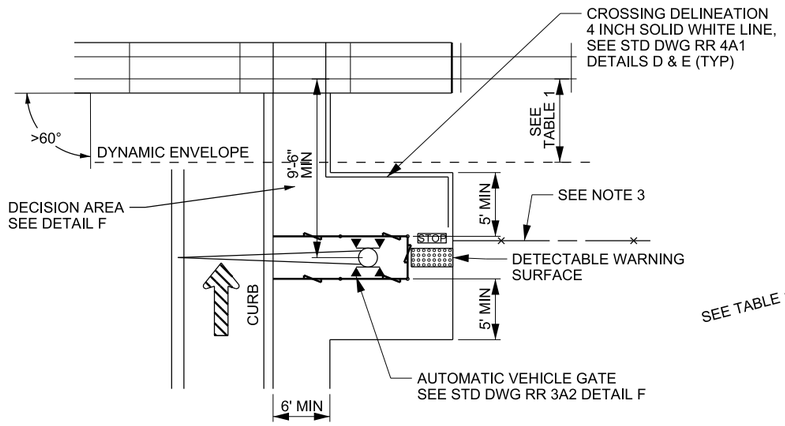

PERPENDICULAR AND ANGLE CROSSINGS > 60°
DECISION AREA ≥ 10 FT
DETAIL C

SEE NOTE D

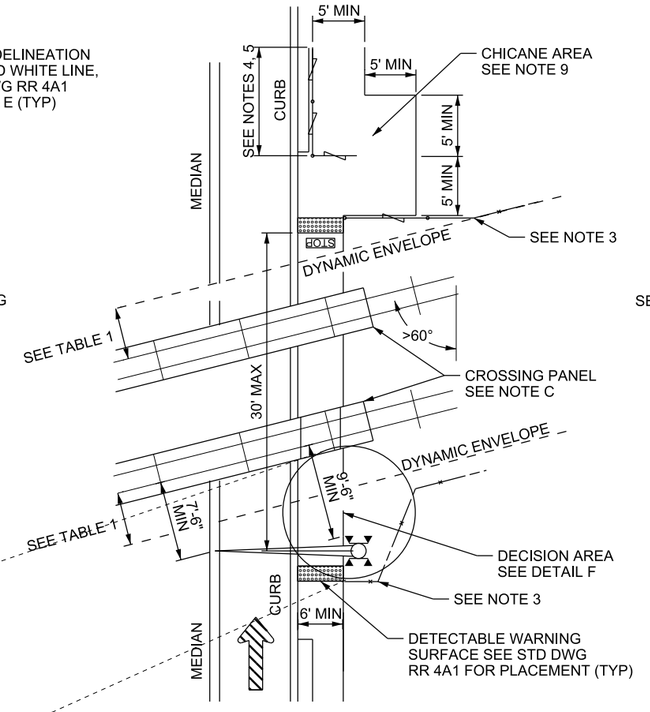

ANGLE CROSSINGS > 60°
DECISION AREA < 10 FT
DETAIL D

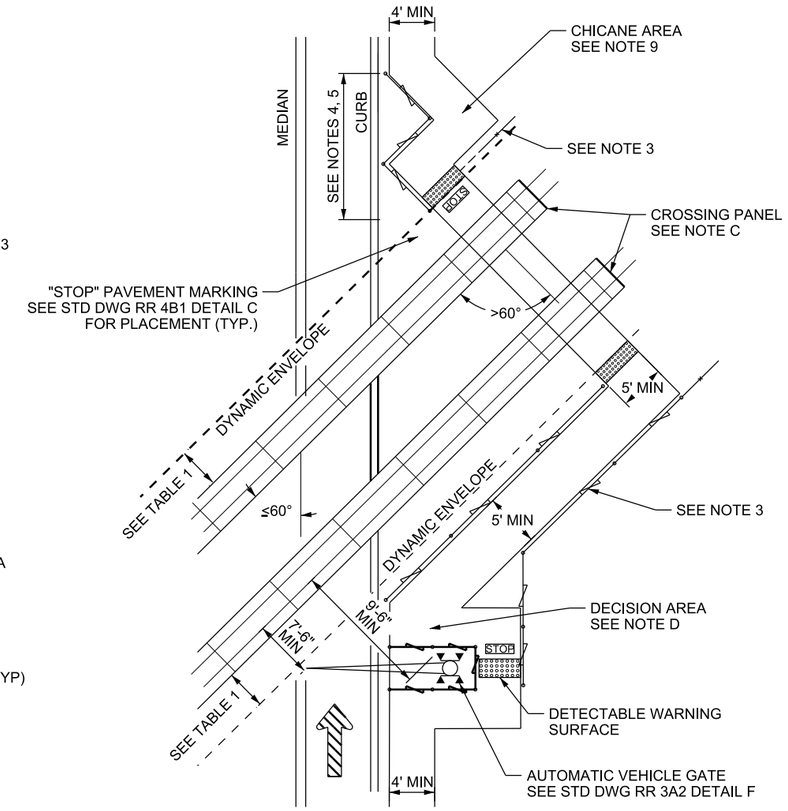

ANGLE CROSSINGS ≤ 60°
DETAIL E

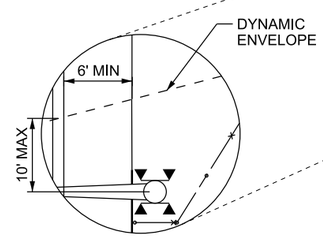

DECISION AREA
DETAIL F

SEE NOTE D

TABLE 1	
DYNAMIC ENVELOPE WIDTH	
VEHICLE TYPE	WIDTH*
LIGHT RAIL/TROLLEY ONLY	4'-6"
SHARED USE	6'-0"
HEAVY RAIL	6'-0"

* MEASURED FROM EDGE OF NEAREST RAIL

LEGEND:

- CHANNELIZING FENCE/BARRIER OR CHANNELIZING LANDSCAPING SEE STD DWG RR 4A2 DETAILS D1, D2, AND E
- CHANNELIZING FENCE/BARRIER SEE STD DWG RR 4A2 DETAILS D1 AND D2
- RIGHT-OF-WAY FENCE

DESIGN-ONLY NOTES:

A. DEFINITIONS:
1. STREET RUNNING ALIGNMENT - A RAILROAD ALIGNMENT IN WHICH TRAINS OPERATE IN MIXED TRAFFIC WITH ALL TYPES OF ROAD USERS. THE ALIGNMENT IS TYPICALLY SEPARATED FROM TRAFFIC BY A CURB OR STRIPING.
2. SEMI-EXCLUSIVE ALIGNMENT - A RAILROAD ALIGNMENT THAT IS IN A SEPARATE RIGHT-OF-WAY OR ALONG A ROADWAY WHERE MOTOR VEHICLES, PEDESTRIANS, AND BICYCLES HAVE LIMITED ACCESS AND CROSS AT DESIGNATED LOCATIONS ONLY. THE ALIGNMENT IS TYPICALLY SEPARATED BY FENCING OR BARRIERS BETWEEN CROSSINGS.
3. DYNAMIC ENVELOPE - THE CLEARANCE REQUIRED FOR THE TRAIN OR LIGHT RAIL TRANSIT EQUIPMENT OVERHANG.
4. SIDEWALK - THAT PORTION OF A STREET BETWEEN THE CURB LINE OR THE LATERAL LINE OF A ROADWAY AND THE ADJACENT PROPERTY LINE THAT IS PAVED OR IMPROVED AND INTENDED FOR USE BY PEDESTRIANS.
5. PATHWAY - A PUBLIC WAY OUTSIDE OF THE TRAVELED WAY AND PHYSICALLY SEPARATED FROM THE ROADWAY BY OPEN SPACE OR BARRIER. PATHWAYS DO NOT INCLUDE SIDEWALKS.
6. PEDESTRIAN ACCESS ROUTE - EITHER A SIDEWALK OR A PATHWAY.

B. PROVIDE DENSE LANDSCAPING WHEN USED IN PLACE OF CHANNELIZING FENCING OR BARRIER TO RESTRICT PEDESTRIANS FROM USING LOCATIONS OTHER THAN PEDESTRIAN ACCESSES.

C. EXTEND CROSSING PANEL A MINIMUM OF 2 FT BEYOND SIDEWALK.

D. INSTALL GATE AND BYPASS ACCORDING TO STD DWG RR 3A2 DETAIL F WHEN THE DISTANCE BETWEEN THE GATE AND THE DYNAMIC ENVELOPE IS GREATER THAN 10 FT OR THE DISTANCE BETWEEN THE DETECTABLE WARNING SURFACE AND THE GATE ON THE OPPOSITE SIDE OF THE CROSSING IS GREATER THAN 30 FT.

NOTES:

1. ADJUST CHANNELIZATION AND BARRIER LAYOUT SHOWN ON THIS DRAWING AS NECESSARY BASED ON SITE SPECIFIC CONDITIONS, WHILE MAINTAINING COMPLIANCE WITH THE MINIMUMS SHOWN.
2. ALIGN CROSSING ENTRANCES TO MINIMIZE CROSSING DISTANCE AND MAXIMIZE VISIBILITY IN BOTH DIRECTIONS.
3. EXTEND CHANNELIZING FENCE OR BARRIER PARALLEL TO TRACKS 25 FT MINIMUM OR EXTEND RIGHT-OF-WAY FENCE TO CONTROL DEVICES.
4. EXTEND CHANNELIZING FENCE OR BARRIER PARALLEL TO ROADWAY IN NON-GATED QUADRANTS 25 FT MINIMUM OR TO RIGHT-OF-WAY LIMITS.
5. PLACE CHANNELIZING FENCE OR BARRIER 18 INCHES FROM THE FACE OF CURB OR ADJACENT TO THE SIDEWALK WHICHEVER PROVIDES GREATER CLEARANCE FOR ROAD USERS WHEN CHANNELIZING FENCE OR BARRIER RUNS PARALLEL TO THE ROADWAY.
6. DO NOT OBSTRUCT SIGHT DISTANCE WITH FENCING OR BARRIERS. USE A CHANNELIZING FENCE OR BARRIER WITH A MINIMUM HEIGHT OF 42 INCHES AND A MAXIMUM HEIGHT OF 43 INCHES WHEN NEAR GRADE CROSSINGS.
7. PLACE THE DETECTABLE WARNING SURFACE ACCORDING TO STD DWG RR 4A1, DETAILS A AND B, FOR LOCATIONS OTHER THAN AUTOMATIC VEHICLE GATES OR ROADWAY AND PEDESTRIAN FLASHING-LIGHT SIGNALS.
8. SEE STD DWG RR 4A1 FOR "STOP" PAVEMENT MARKING DETAILS.
9. ADJUST SIDEWALK WIDTH THROUGH CHICANE AREA TO PROVIDE 5 FT MINIMUM GAP BETWEEN FENCE POSTS AND EDGE OF SIDEWALK TO ACCOMODATE BICYCLE TRAFFIC.

NO.	DATE	APPR.	REMARKS
REVISIONS			

UTAH DEPARTMENT OF TRANSPORTATION
STANDARD DRAWINGS FOR ROAD AND BRIDGE CONSTRUCTION
SALT LAKE CITY, UTAH

RECOMMENDED FOR APPROVAL — JAN. 01, 2017 DATE
CHAIRMAN STANDARDS COMMITTEE APPROVED — JAN. 01, 2017 DATE
DEPUTY DIRECTOR

PEDESTRIAN CONTROLS
SEMI-EXCLUSIVE
RAILROAD ALIGNMENTS
SHEET 2 OF 2
STANDARD DRAWING TITLE

STD. DWG. NO.
RR 5A2

DGN File:L:\Standard Drawings\Imperial\2017 Approved\1-All Drawings\RR05A2.dgn
28-NOV-2016

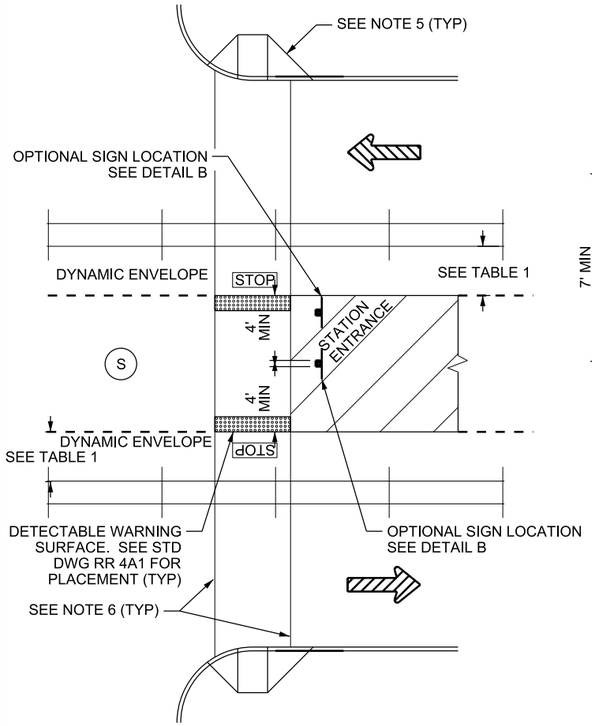

BLANK-OUT SIGNS AT STATION ENTRANCES (PLAN) DETAIL A

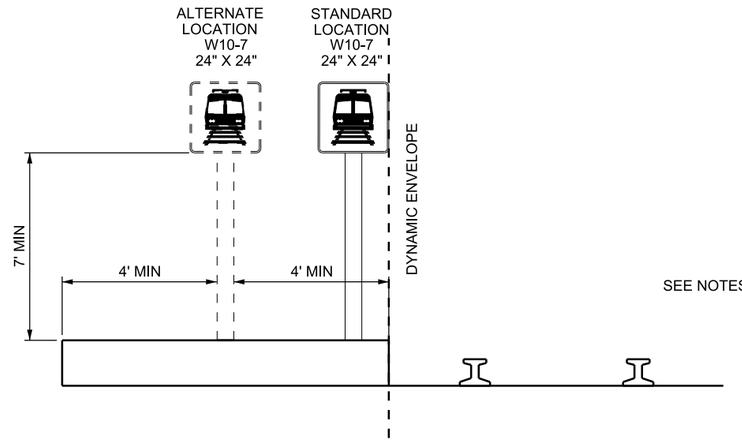

BLANK-OUT SIGN AT STATION ENTRANCE (PROFILE) DETAIL B

SEE NOTE B

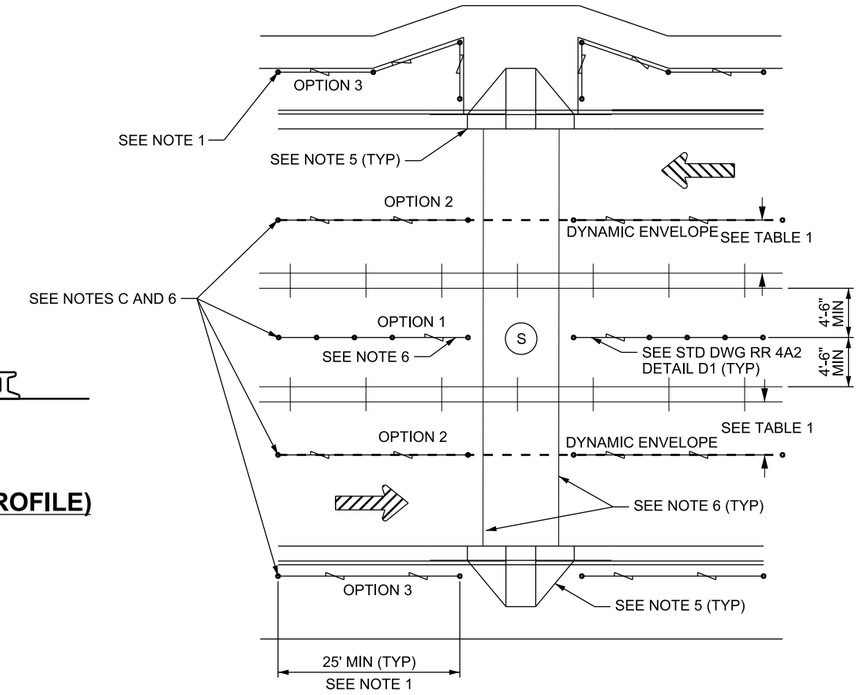

MID-BLOCK CROSSINGS STREET RUNNING ALIGNMENTS DETAIL C

SEE NOTE 1

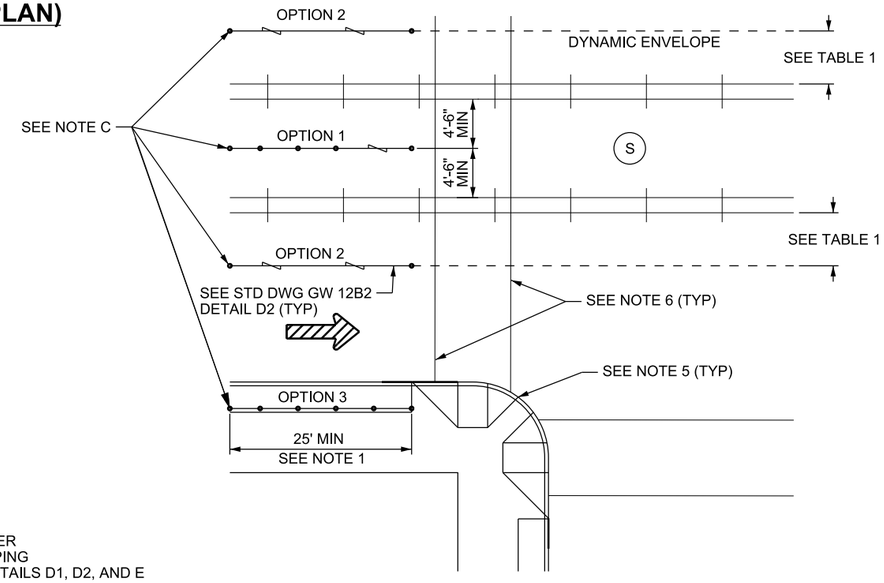

INTERSECTIONS STREET RUNNING ALIGNMENTS DETAIL D

TABLE 1	
DYNAMIC ENVELOPE WIDTH	
VEHICLE TYPE	WIDTH*
LIGHT RAIL/TROLLEY ONLY	4'-6"
SHARED USE	6'-0"
HEAVY RAIL	6'-0"

* MEASURED FROM EDGE OF NEAREST RAIL

LEGEND:

CHANNELIZING FENCE/BARRIER
OR CHANNELIZING LANDSCAPING
SEE STD DWG GW RR 4A2 DETAILS D1, D2, AND E

CHANNELIZING FENCE/BARRIER
SEE STD DWG GW RR 4A2 DETAILS D1 AND D2

(S) SIGNALIZED INTERSECTION

DESIGN-ONLY NOTES:

A. DEFINITIONS:
1. STREET RUNNING ALIGNMENT - A RAILROAD ALIGNMENT IN WHICH TRAINS OPERATE IN MIXED TRAFFIC WITH ALL TYPES OF ROAD USERS. THE ALIGNMENT IS TYPICALLY SEPARATED FROM TRAFFIC BY A CURB OR STRIPING.
2. SEMI-EXCLUSIVE ALIGNMENT - A RAILROAD ALIGNMENT THAT IS IN A SEPARATE RIGHT-OF-WAY OR ALONG A ROADWAY WHERE MOTOR VEHICLES, PEDESTRIANS, AND BICYCLES HAVE LIMITED ACCESS AND CROSS AT DESIGNATED LOCATIONS ONLY. THE ALIGNMENT IS TYPICALLY SEPARATED BY FENCING OR BARRIERS BETWEEN CROSSINGS.
3. DYNAMIC ENVELOPE - THE CLEARANCE REQUIRED FOR THE TRAIN OR LIGHT RAIL TRANSIT EQUIPMENT OVERHANG.
4. SIDEWALK - THAT PORTION OF A STREET BETWEEN THE CURB LINE OR THE LATERAL LINE OF A ROADWAY AND THE ADJACENT PROPERTY LINE THAT IS PAVED OR IMPROVED AND INTENDED FOR USE BY PEDESTRIANS.
5. PATHWAY - A PUBLIC WAY OUTSIDE OF THE TRAVELED WAY AND PHYSICALLY SEPARATED FROM THE ROADWAY BY OPEN SPACE OR BARRIER. PATHWAYS DO NOT INCLUDE SIDEWALKS.
6. PEDESTRIAN ACCESS ROUTE - EITHER A SIDEWALK OR A PATHWAY.

B. PLACE A W10-7 BLANK-OUT SIGN IN THE ALTERNATE LOCATION ONLY IF THE 4 FT MINIMUM CLEARANCE CAN BE PROVIDED TO EITHER SIDE OF THE SIGN.

C. PLACE CHANNELIZING FENCE OR BARRIER 18 INCHES FROM THE FACE OF CURB OR ADJACENT TO THE SIDEWALK WHICHEVER PROVIDES GREATER CLEARANCE FOR ROAD USERS WHEN CHANNELIZING FENCE OR BARRIER RUNS PARALLEL TO THE ROADWAY.

D. PROVIDE DENSE LANDSCAPING WHEN USED IN PLACE OF CHANNELIZING FENCING OR BARRIER TO RESTRICT PEDESTRIANS FROM USING LOCATIONS OTHER THAN PEDESTRIAN ACCESSES.

NOTES:

1. PLACE CHANNELIZING FENCE OR BARRIER 18 INCHES FROM THE FACE OF CURB OR ADJACENT TO THE SIDEWALK WHICHEVER PROVIDES GREATER CLEARANCE FOR ROAD USERS WHEN CHANNELIZING FENCE OR BARRIER RUNS PARALLEL TO THE ROADWAY.
2. DO NOT OBSTRUCT SIGHT DISTANCE WITH FENCING OR BARRIERS. USE A CHANNELIZING FENCE OR BARRIER WITH A MINIMUM HEIGHT OF 42 INCHES AND A MAXIMUM HEIGHT OF 43 INCHES WHEN NEAR GRADE CROSSINGS.
3. ADJUST CHANNELIZATION AND BARRIER LAYOUT FROM THE LAYOUT SHOWN ON THIS DRAWING AS NECESSARY BASED ON SITE SPECIFIC SITUATIONS WHILE MAINTAINING COMPLIANCE WITH THE MINIMUMS SHOWN.
4. PLACE THE DETECTABLE WARNING SURFACE ACCORDING TO STD DWG RR 4A1, DETAILS A AND B, FOR LOCATIONS OTHER THAN AUTOMATIC VEHICLE GATES OR ROADWAY AND PEDESTRIAN FLASHING-LIGHT SIGNALS.
5. REFER TO PA SERIES STD DWGS FOR PEDESTRIAN RAMP DETAILS.
6. REFER TO STD DWG ST 4 FOR CROSSWALK MARKING DETAILS.

REVISIONS

NO.	DATE	APPR.	REMARKS

UTAH DEPARTMENT OF TRANSPORTATION
STANDARD DRAWINGS FOR ROAD AND BRIDGE CONSTRUCTION
SALT LAKE CITY, UTAH

RECOMMENDED FOR APPROVAL — JAN.01.2017 DATE
CHAIRMAN STANDARDS COMMITTEE APPROVED — JAN.01.2017 DATE
DEPUTY DIRECTOR

PEDESTRIAN CONTROLS
STREET RUNNING
RAILROAD ALIGNMENT
SIGNALIZED
INTERSECTIONS

STANDARD DRAWING TITLE

STD. DWG. NO.
RR 6

DGN File:L:\Standard Drawings\Imperial\2017 Approved\1-All Drawings\RR06.dgn
28-NOV-2016

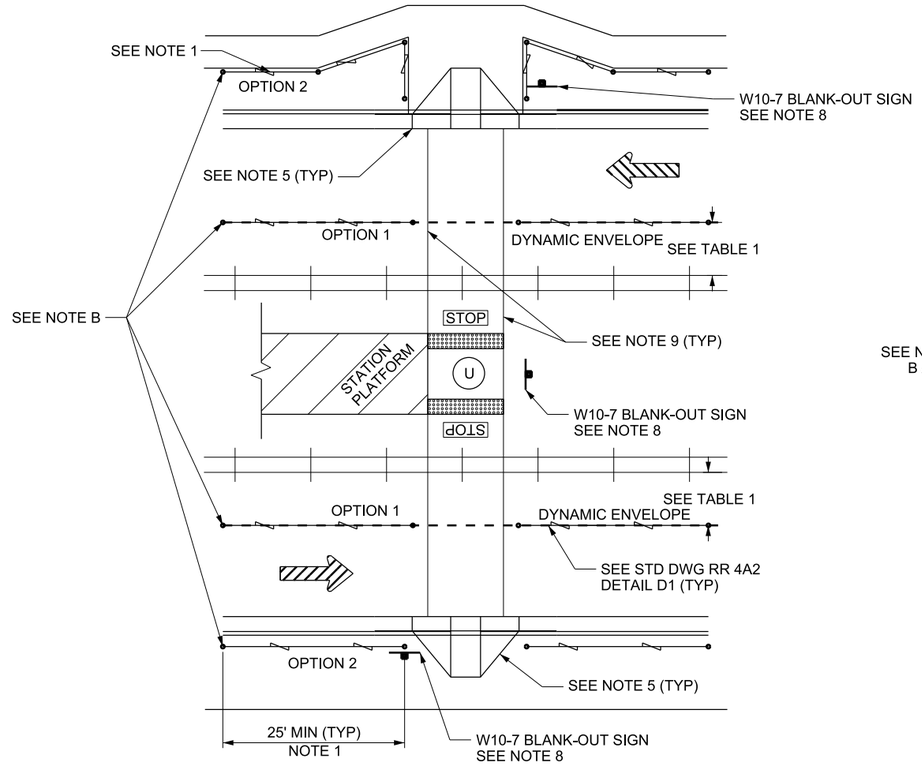

MID-BLOCK STATION ACCESS STREET RUNNING ALIGNMENTS DETAIL A

SEE NOTE 1

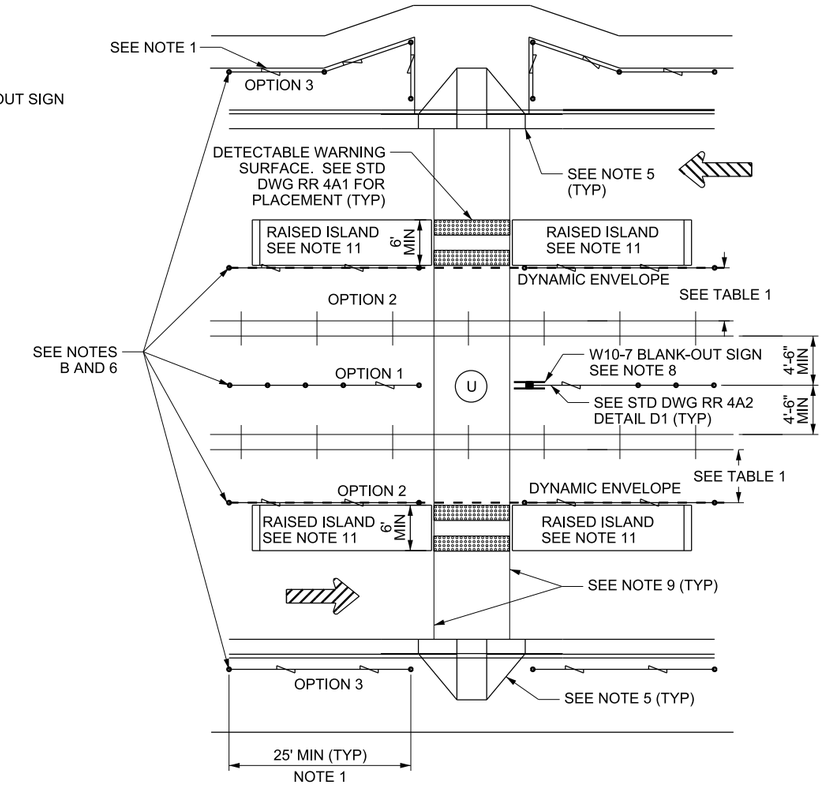

MID-BLOCK CROSSINGS STREET RUNNING ALIGNMENTS DETAIL B

SEE NOTE 1

TABLE 1	
DYNAMIC ENVELOPE WIDTH	
VEHICLE TYPE	WIDTH*
LIGHT RAIL/TROLLEY ONLY	4'-6"
SHARED USE	6'-0"
HEAVY RAIL	6'-0"

* MEASURED FROM EDGE OF NEAREST RAIL

LEGEND:

CHANNELIZING FENCE/BARRIER
OR CHANNELIZING LANDSCAPING
SEE STD DWG RR 4A2 DETAILS D1, D2, AND E

CHANNELIZING FENCE/BARRIER
SEE STD DWG RR 4A2 DETAILS D1 AND D2

(U) UNSIGNALIZED INTERSECTION

DESIGN-ONLY NOTES:

A. DEFINITIONS:
1. STREET RUNNING ALIGNMENT - A RAILROAD ALIGNMENT IN WHICH TRAINS OPERATE IN MIXED TRAFFIC WITH ALL TYPES OF ROAD USERS. THE ALIGNMENT IS TYPICALLY SEPARATED FROM TRAFFIC BY A CURB OR STRIPING.
2. SEMI-EXCLUSIVE ALIGNMENT - A RAILROAD ALIGNMENT THAT IS IN A SEPARATE RIGHT-OF-WAY OR ALONG A ROADWAY WHERE MOTOR VEHICLES, PEDESTRIANS, AND BICYCLES HAVE LIMITED ACCESS AND CROSS AT DESIGNATED LOCATIONS ONLY. THE ALIGNMENT IS TYPICALLY SEPARATED BY FENCING OR BARRIERS BETWEEN CROSSINGS.
3. DYNAMIC ENVELOPE - THE CLEARANCE REQUIRED FOR THE TRAIN OR LIGHT RAIL TRANSIT EQUIPMENT OVERHANG.
4. SIDEWALK - THAT PORTION OF A STREET BETWEEN THE CURB LINE OR THE LATERAL LINE OF A ROADWAY AND THE ADJACENT PROPERTY LINE THAT IS PAVED OR IMPROVED AND INTENDED FOR USE BY PEDESTRIANS.
5. PATHWAY - A PUBLIC WAY OUTSIDE OF THE TRAVELED WAY AND PHYSICALLY SEPARATED FROM THE ROADWAY BY OPEN SPACE OR BARRIER. PATHWAYS DO NOT INCLUDE SIDEWALKS.
6. PEDESTRIAN ACCESS ROUTE - EITHER A SIDEWALK OR A PATHWAY.

B. PLACE CHANNELIZING FENCE OR BARRIER WHEN USED ACCORDING TO OPTION 1 UNLESS SITE SPECIFIC CONDITIONS SUCH AS RIGHT-OF-WAY AVAILABILITY, CHANNELIZATION TYPE, OR SIGHT DISTANCE REQUIRE ALTERNATE PLACEMENT. CONSTRUCT FENCING A MINIMUM OF 25 FT PARALLEL TO THE TRACKS.

C. PROVIDE DENSE LANDSCAPING WHEN USED IN PLACE OF CHANNELIZING FENCING OR BARRIER TO RESTRICT PEDESTRIANS FROM USING LOCATIONS OTHER THAN PEDESTRIAN ACCESSES.

NOTES:

1. PLACE CHANNELIZING FENCE OR BARRIER 18 INCHES FROM THE FACE OF CURB OR ADJACENT TO THE SIDEWALK WHICHEVER PROVIDES GREATER CLEARANCE FOR ROAD USERS WHEN CHANNELIZING FENCE OR BARRIER RUNS PARALLEL TO THE ROADWAY.
2. DO NOT OBSTRUCT SIGHT DISTANCE WITH FENCING OR BARRIERS. USE A CHANNELIZING FENCE OR BARRIER WITH A MINIMUM HEIGHT OF 42 INCHES AND A MAXIMUM HEIGHT OF 43 INCHES WHEN NEAR GRADE CROSSINGS.
3. ADJUST CHANNELIZATION AND BARRIER LAYOUT FROM THE LAYOUT SHOWN ON THIS DRAWING AS NECESSARY BASED ON SITE SPECIFIC SITUATIONS WHILE MAINTAINING COMPLIANCE WITH THE MINIMUMS SHOWN.
4. PLACE THE DETECTABLE WARNING SURFACE ACCORDING TO STD DWG RR 4A1, DETAILS A AND B, FOR LOCATIONS OTHER THAN AUTOMATIC VEHICLE GATES OR ROADWAY OR PEDESTRIAN FLASHING-LIGHT SIGNALS.
5. SEE PA SERIES STD DWGS FOR PEDESTRIAN RAMP DETAILS.
6. INSTALL CHANNELIZING FENCE OR BARRIER WITH A LOOK (R15-8) SIGN ACCORDING TO STD DWG RR 4A2 DETAIL D1 UNLESS SIGHT DISTANCE RESTRICTIONS NECESSITATE W10-7 BLANK-OUT SIGNS. REPLACE R15-8 LOOK SIGNS WITH W10-7 BLANK-OUT SIGNS, IF REQUIRED.
7. INSTALL CHANNELIZING FENCE OR BARRIER WITH A LOOK (R15-8) SIGN ACCORDING TO STD DWG RR 4A2 DETAIL D2 UNLESS SIGHT DISTANCE RESTRICTIONS NECESSITATE W10-7 BLANK-OUT SIGNS. INSTALL CHANNELIZING FENCE OR BARRIER ACCORDING TO DETAIL A ON THIS SHEET IF BLANK-OUT SIGNS ARE REQUIRED.
8. INSTALL W10-7 BLANK-OUT SIGN ACCORDING TO STD DWG RR 3A1, DETAIL B.
9. SEE STD DWG ST 4 FOR CROSSWALK MARKING DETAILS.
10. SEE STD DWG PA 2, MEDIAN BREAK EXAMPLE, FOR PEDESTRIAN REFUGE DETAILS.
11. SEE STD DWG GW 1B FOR RAISED ISLAND AND PLOWABLE END SECTION DETAILS.

REVISIONS

NO.	DATE	APPR.	REMARKS

UTAH DEPARTMENT OF TRANSPORTATION
STANDARD DRAWINGS FOR ROAD AND BRIDGE CONSTRUCTION
SALT LAKE CITY, UTAH

RECOMMENDED FOR APPROVAL — JAN.01.2017 DATE
CHAIRMAN STANDARDS COMMITTEE APPROVED — JAN.01.2017 DATE
DEPUTY DIRECTOR — DATE

STANDARD DRAWING TITLE
PEDESTRIAN CONTROLS
STREET RUNNING
RAILROAD ALIGNMENT
UNSIGNALIZED
INTERSECTIONS

STD. DWG. NO.
RR 7

DGN File:L:\Standard Drawings\Imperial\2017 Approved\1-All Drawings\RR07.dgn
28-NOV-2016

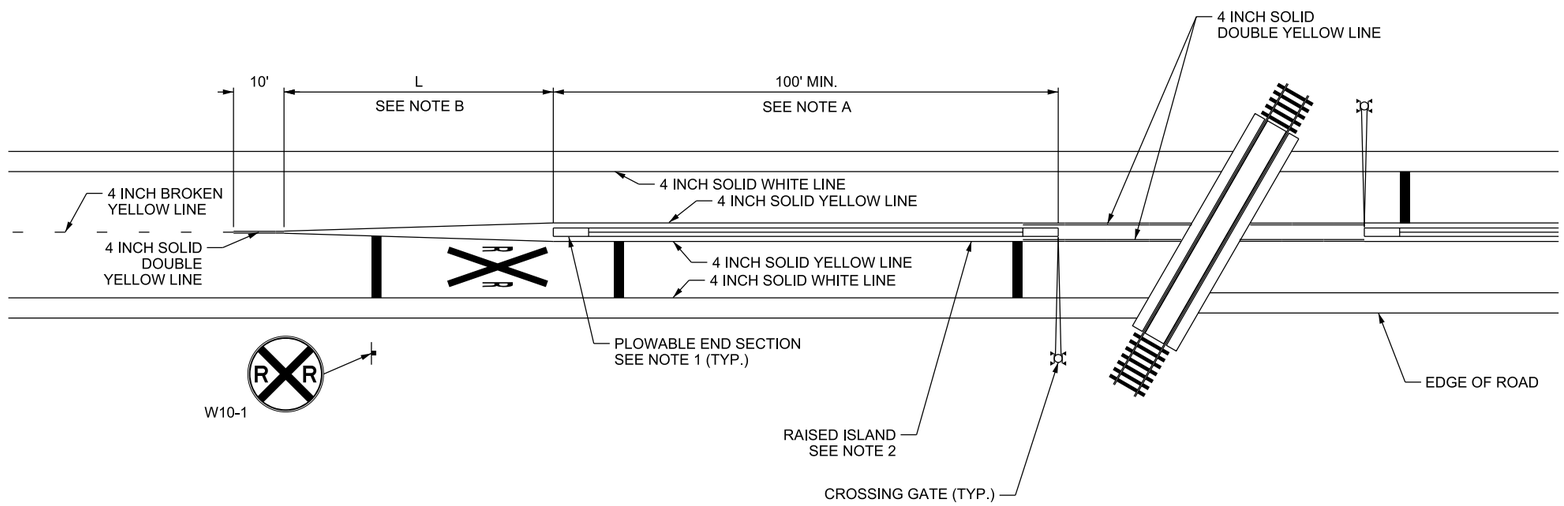

DESIGN-ONLY NOTES:

A. RAISED ISLAND LENGTH MAY BE REDUCED TO 60 FT MINIMUM IF NEARBY INTERSECTIONS PREVENT INSTALLATION OF A FULL LENGTH BARRIER UPON APPROVAL FROM THE ENGINEER.

B. SEE TABLE 1 ON STD DWG DD3 FOR TAPER LENGTH "L."

NOTES:

1. PLACE PLOWABLE END SECTIONS AT BOTH ENDS OF RAISED ISLAND. SEE STD DWG GW 01B FOR PLOWABLE END SECTION DETAILS.
2. USE TYPE B5 CURB. SEE STD DWG GW 01A FOR RAISED ISLAND DETAILS.
3. SEE STD DWG RR 2 FOR PAVEMENT MARKING INFORMATION.
4. TYPICAL PLACEMENT FOR BOTH SIDES OF RAILROAD CROSSING.
5. DELINEATE EACH END OF RAISED ISLAND.

REVISIONS

NO.	DATE	APPR.	REMARKS

UTAH DEPARTMENT OF TRANSPORTATION
STANDARD DRAWINGS FOR ROAD AND BRIDGE CONSTRUCTION
SALT LAKE CITY, UTAH

RECOMMENDED FOR APPROVAL — JAN. 01, 2017 DATE
CHAIRMAN STANDARDS COMMITTEE APPROVED — JAN. 01, 2017 DATE
DEPUTY DIRECTOR

RAISED ISLAND PLACEMENT AT RAILROAD CROSSINGS
STANDARD DRAWING TITLE

STD. DWG. NO.
RR 8

28-NOV-2016 DGN File:L:\Standard Drawings\Imperial\2017 Approved\1-All Drawings\RR08.dgn

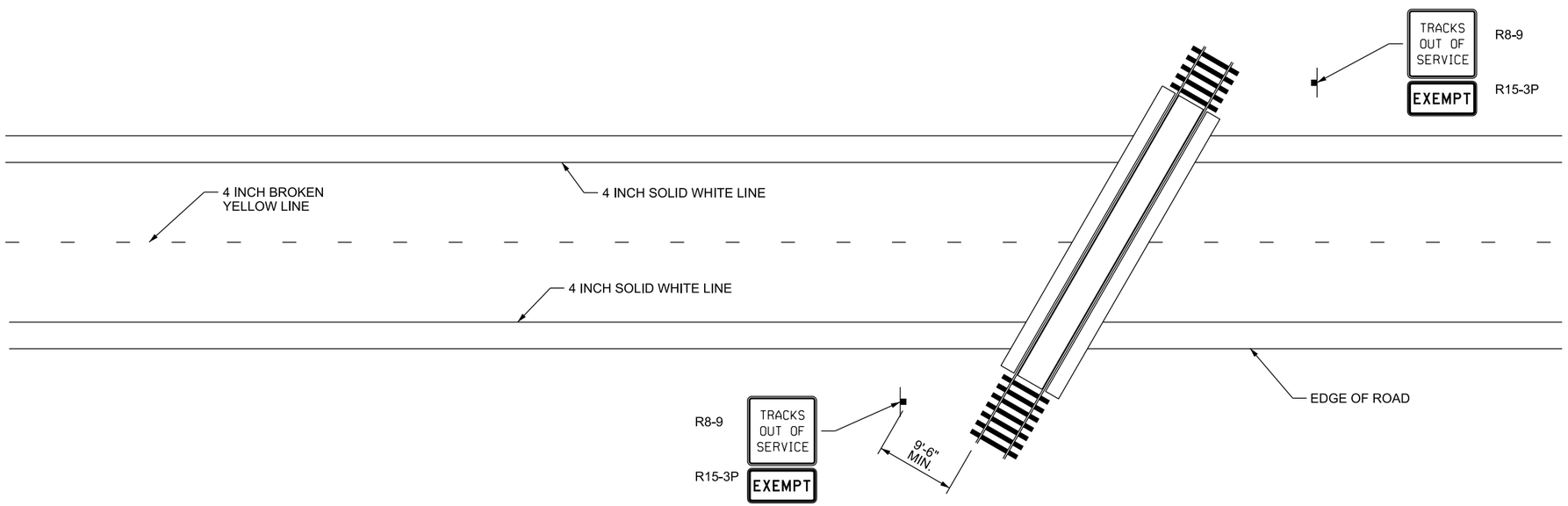

NOTES:

1. SEE STD DWG SN 7A FOR MOUNTING HEIGHT AND OFFSET.
2. REMOVE ALL WARNING DEVICES AND RAILROAD SPECIFIC PAVEMENT MARKINGS.
3. TYPICAL PLACEMENT FOR BOTH SIDES OF RAILROAD CROSSING.

REVISIONS

NO.	DATE	APPR.	REMARKS

UTAH DEPARTMENT OF TRANSPORTATION
STANDARD DRAWINGS FOR ROAD AND BRIDGE CONSTRUCTION
SALT LAKE CITY, UTAH

RECOMMENDED FOR APPROVAL — JAN. 01, 2017 DATE

CHAIRMAN STANDARDS COMMITTEE APPROVED — JAN. 01, 2017 DATE

DEPUTY DIRECTOR

STANDARD DRAWING TITLE

SIGNING AND STRIPING AT INACTIVE RAILROAD CROSSINGS

STD. DWG. NO.

RR 9

28-NOV-2016 DGN File:L:\Standard_Drawings\Imperial\2017 Approved\1-All Drawings\RR09.dgn

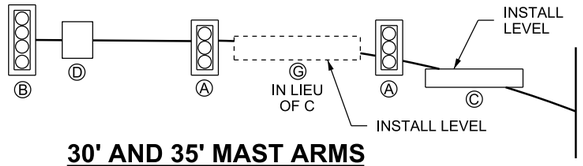

30' AND 35' MAST ARMS MAXIMUM LOADING
(SEE NOTE 8 AND A)

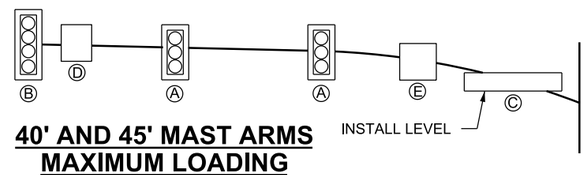

40' AND 45' MAST ARMS MAXIMUM LOADING
(SEE NOTE 8 AND A)

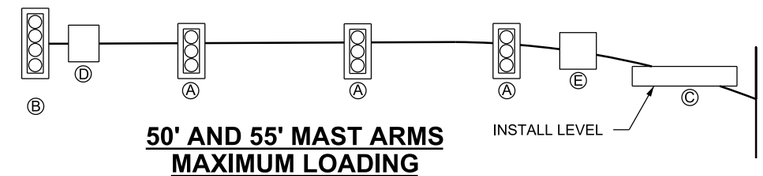

50' AND 55' MAST ARMS MAXIMUM LOADING
(SEE NOTE 8 AND A)

FIELD CUT END OF MAST ARM IF 25 FOOT MAST ARM LENGTH IS REQUIRED. INSTALL CUSTOM ARM END CAP.

TYPICAL SIGNAL HEAD & SIGN PLACEMENT FOR MAXIMUM LOADING

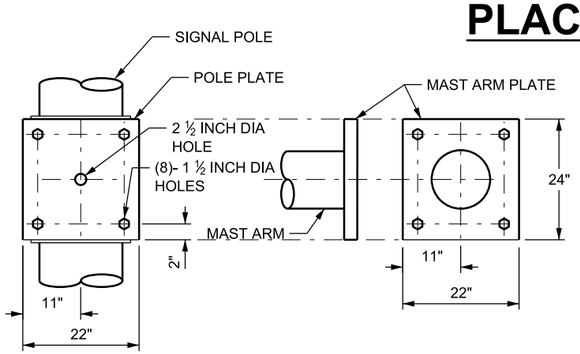

30' TO 55' MAST ARM AND POLE PLATE DETAIL

DEVICE	DESCRIPTION/SIZE	MAXIMUM PROJECTED AREA (SF)	*MAXIMUM WEIGHT (LBS)	MOUNTING (SEE STD DWG SL 3D)
Ⓐ SIGNAL	12", 3-SECTION WITH BACK PLATE	8.7	55	BRACKET
Ⓑ SIGNAL	12", 4-SECTION WITH BACK PLATE	11.1	72	BRACKET
Ⓖ SIGN	STREET SIGN 18" x 96", OR 30" X 60"	12.5	24	OPTION A
Ⓒ SIGN	STREET SIGN 24" x 120", (MAX) OR	20.0	38	OPTION B
	18" X 96", OR 30" x 60"	12.5	24	
Ⓓ SIGN	SIGN 30" x 36" (MAX)	7.5	15	OPTION A
Ⓔ SIGN	BLANKOUT SIGN 36" x 36" (MAX)	9.0	80	BRACKET

* DOES NOT ACCOUNT FOR PROGRAMMABLE HEADS. SEE NOTE A.

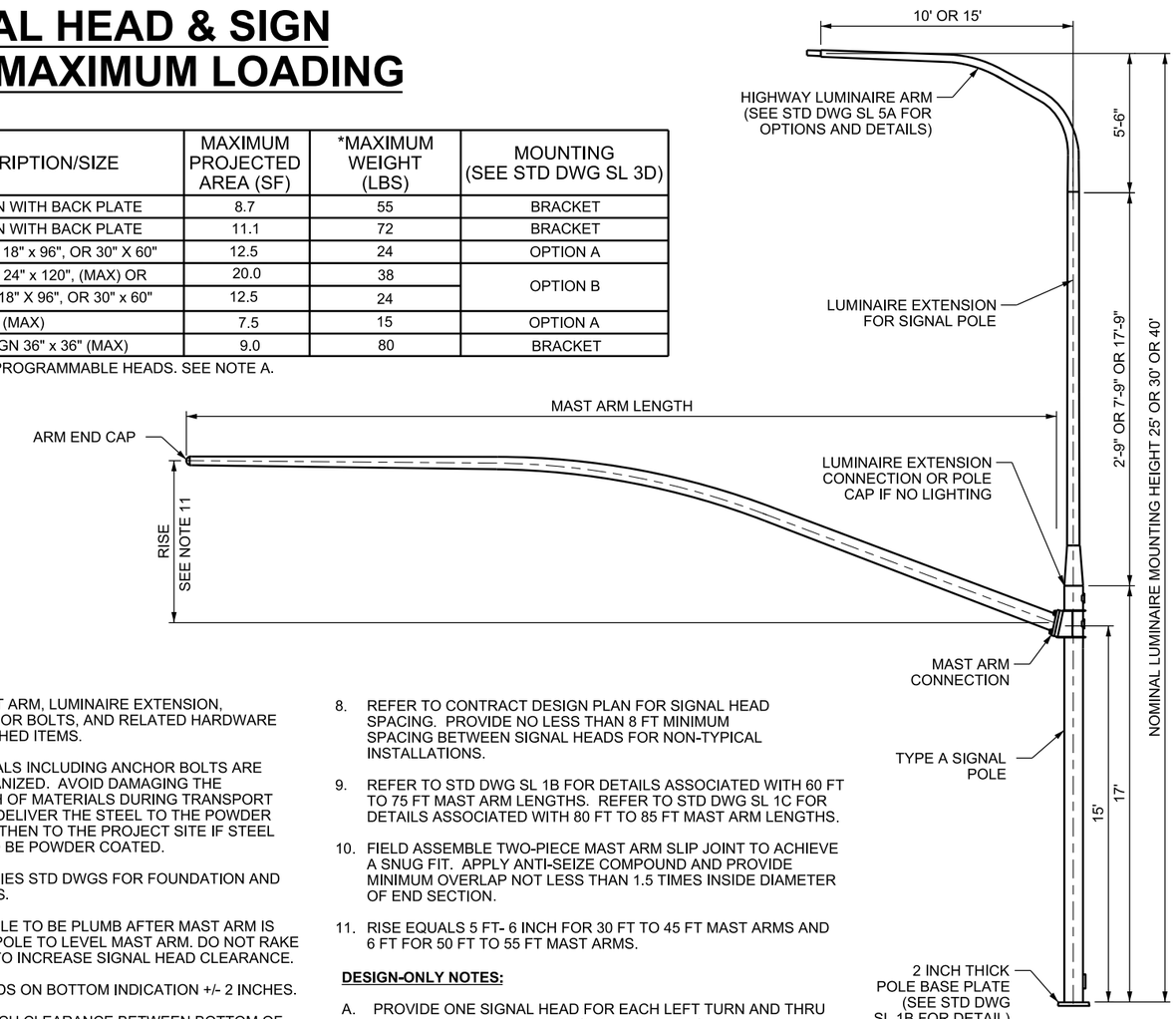

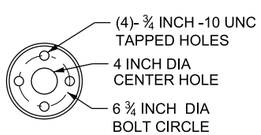

SECTION A-A

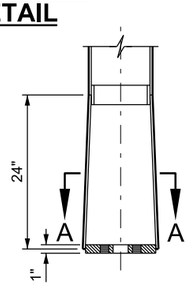

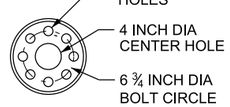

SECTION B-B

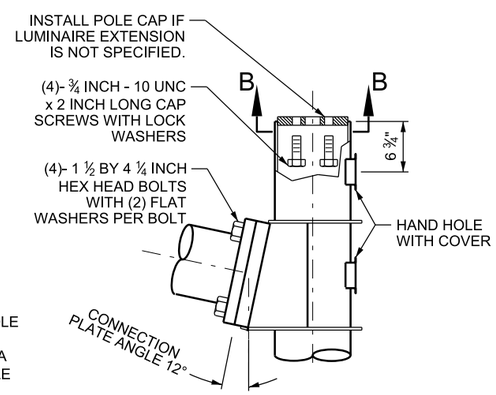

30' TO 55' MAST ARM POLE EXTENSION AND CONNECTION DETAIL

GENERAL NOTES:

1. SIGNAL POLE, MAST ARM, LUMINAIRE EXTENSION, FOUNDATION ANCHOR BOLTS, AND RELATED HARDWARE ARE STATE FURNISHED ITEMS.
2. ALL STEEL MATERIALS INCLUDING ANCHOR BOLTS ARE HOT-DIPPED GALVANIZED. AVOID DAMAGING THE GALVANIZED FINISH OF MATERIALS DURING TRANSPORT AND PLACEMENT. DELIVER THE STEEL TO THE POWDER COATING FACILITY THEN TO THE PROJECT SITE IF STEEL MATERIALS ARE TO BE POWDER COATED.
3. REFER TO SL 2 SERIES STD DWGS FOR FOUNDATION AND POLE BASE DETAILS.
4. INSTALL SIGNAL POLE TO BE PLUMB AFTER MAST ARM IS ATTACHED. RAKE POLE TO LEVEL MAST ARM. DO NOT RAKE THE SIGNAL POLE TO INCREASE SIGNAL HEAD CLEARANCE.
5. LEVEL SIGNAL HEADS ON BOTTOM INDICATION +/- 2 INCHES.
6. PROVIDE 18 FT-6 INCH CLEARANCE BETWEEN BOTTOM OF MAST ARM SIGN, INCLUDING BRACKETS, AND HIGHEST POINT OF ROADWAY SURFACE UNDER THE SIGN. A 17 FT-6 INCH MINIMUM TO 19 FT MAXIMUM CLEARANCE IS ALLOWED IF 18 FT-6 INCH CLEARANCE IS UNATTAINABLE,ONLY BY WRITTEN APPROVAL FROM REGION TRAFFIC OPERATIONS ENGINEER.
7. PROVIDE SIGNAL HEAD BRACKET MOUNT FOR ATTACHING SIGNAL HEADS AND SIGNS TO MAST ARM. SEE SL 3 SERIES STD DWGS FOR DETAILS.
8. REFER TO CONTRACT DESIGN PLAN FOR SIGNAL HEAD SPACING. PROVIDE NO LESS THAN 8 FT MINIMUM SPACING BETWEEN SIGNAL HEADS FOR NON-TYPICAL INSTALLATIONS.
9. REFER TO STD DWG SL 1B FOR DETAILS ASSOCIATED WITH 60 FT TO 75 FT MAST ARM LENGTHS. REFER TO STD DWG SL 1C FOR DETAILS ASSOCIATED WITH 80 FT TO 85 FT MAST ARM LENGTHS.
10. FIELD ASSEMBLE TWO-PIECE MAST ARM SLIP JOINT TO ACHIEVE A SNUG FIT. APPLY ANTI-SEIZE COMPOUND AND PROVIDE MINIMUM OVERLAP NOT LESS THAN 1.5 TIMES INSIDE DIAMETER OF END SECTION.
11. RISE EQUALS 5 FT- 6 INCH FOR 30 FT TO 45 FT MAST ARMS AND 6 FT FOR 50 FT TO 55 FT MAST ARMS.

DESIGN-ONLY NOTES:

A. PROVIDE ONE SIGNAL HEAD FOR EACH LEFT TURN AND THRU LANE. CENTER LEFT TURN SIGNAL HEADS WITH LEFT TURN APPROACH LANES AND CENTER THRU SIGNAL HEADS WITH THRU ACCEPTANCE LANES WHERE POSSIBLE. PROVIDE TWO THRU HEADS SPACED AT 8 FT TO 10 FT FOR ONE THRU LANE ROADWAYS. CONTACT TRAFFIC AND SAFETY SIGNAL AND LIGHTING ENGINEER THROUGH THE ENGINEER FOR LOADING APPROVAL IF MAST ARM LOADING EXCEEDS LOADING SHOWN OR IF USING PROGRAMMABLE SIGNAL HEADS.

REVISIONS

NO.	DATE	APPR.	REMARKS

UTAH DEPARTMENT OF TRANSPORTATION
STANDARD DRAWINGS FOR ROAD AND BRIDGE CONSTRUCTION
SALT LAKE CITY, UTAH

RECOMMENDED FOR APPROVAL — JAN. 01, 2017 DATE
CHAIRMAN STANDARDS COMMITTEE APPROVED — JAN. 01, 2017 DATE
DEPUTY DIRECTOR

STANDARD DRAWING TITLE
TRAFFIC SIGNAL MAST ARM POLE AND LUMINAIRE EXTENSION 30 FT THROUGH 55 FT

STD. DWG. NO.
SL 1A

DGN File: L:\Standard_Drawings\Imperial\2017 Approved\1-All Drawings\SL01A.dgn
28-NOV-2016

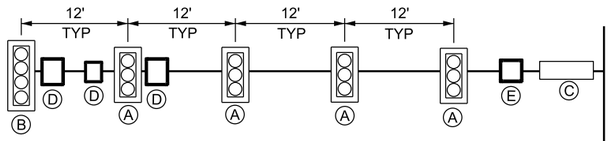

60' AND 65' MAST ARMS MAXIMUM LOADING
(SEE NOTE 9 STD DWG SL1A)

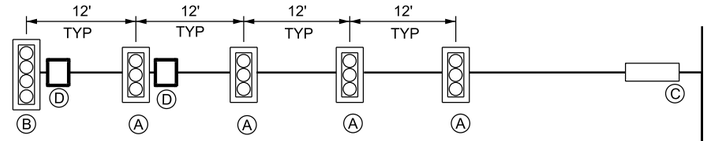

70' AND 75' MAST ARMS MAXIMUM LOADING
(SEE NOTE 9 STD DWG SL1A)

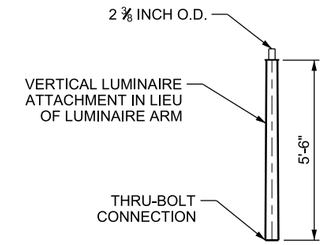

VERTICAL LUMINAIRE ATTACHMENT

TYPICAL SIGNAL HEAD & SIGN PLACEMENT FOR MAXIMUM LOADING

DEVICE	DESCRIPTION/SIZE	PROJECTED AREA (SF)	WEIGHT (LBS)
Ⓐ SIGNAL	12", 3-SECTION WITH BACK PLATE	8.7	55
Ⓑ SIGNAL	12", 4-SECTION WITH BACK PLATE	11.1	72
Ⓒ SIGN	STREET SIGN 18" X 96", OR 24" X 120", (MAX) OR 30" X 60"	20.0	38
Ⓓ SIGN	SIGN 30" X 36" (MAX) 24" X 24"	7.5	15
Ⓔ SIGN	BLANKOUT SIGN 36" X 36" (MAX)	9.0	80

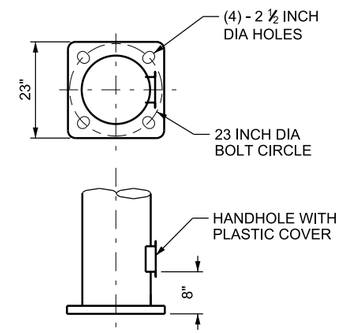

TYPICAL BASE PLATE DETAIL

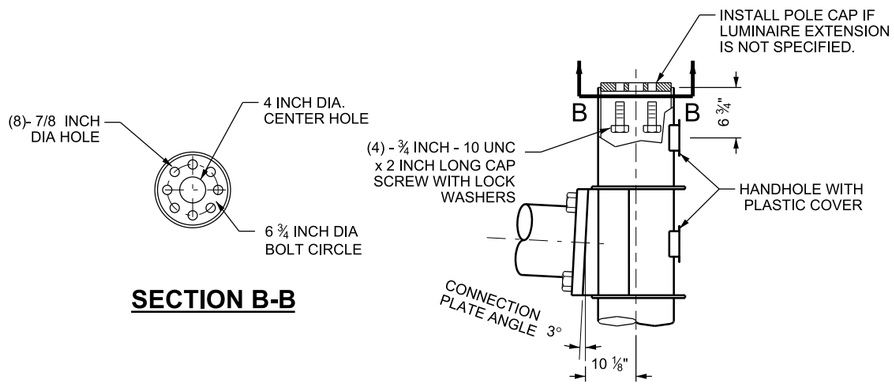

SECTION B-B

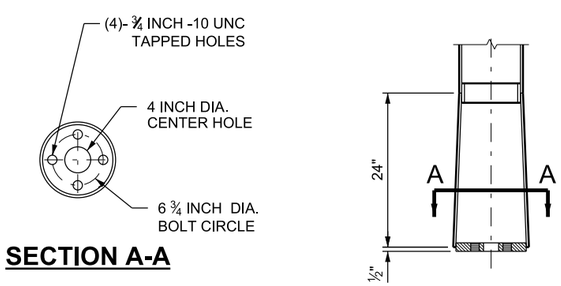

SECTION A-A

60' THRU 75' MAST ARM POLE EXTENSION AND CONNECTION DETAIL

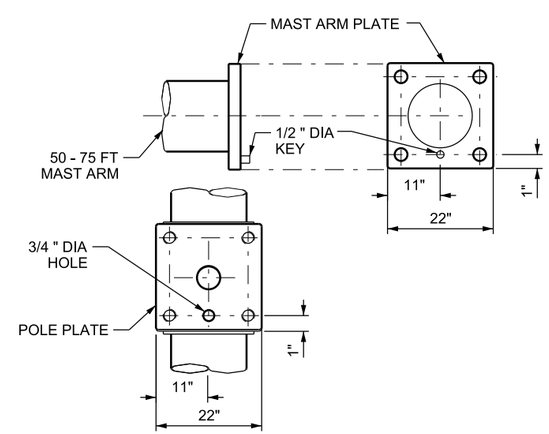

60' THRU 75' MAST ARM AND POLE KEY DETAIL

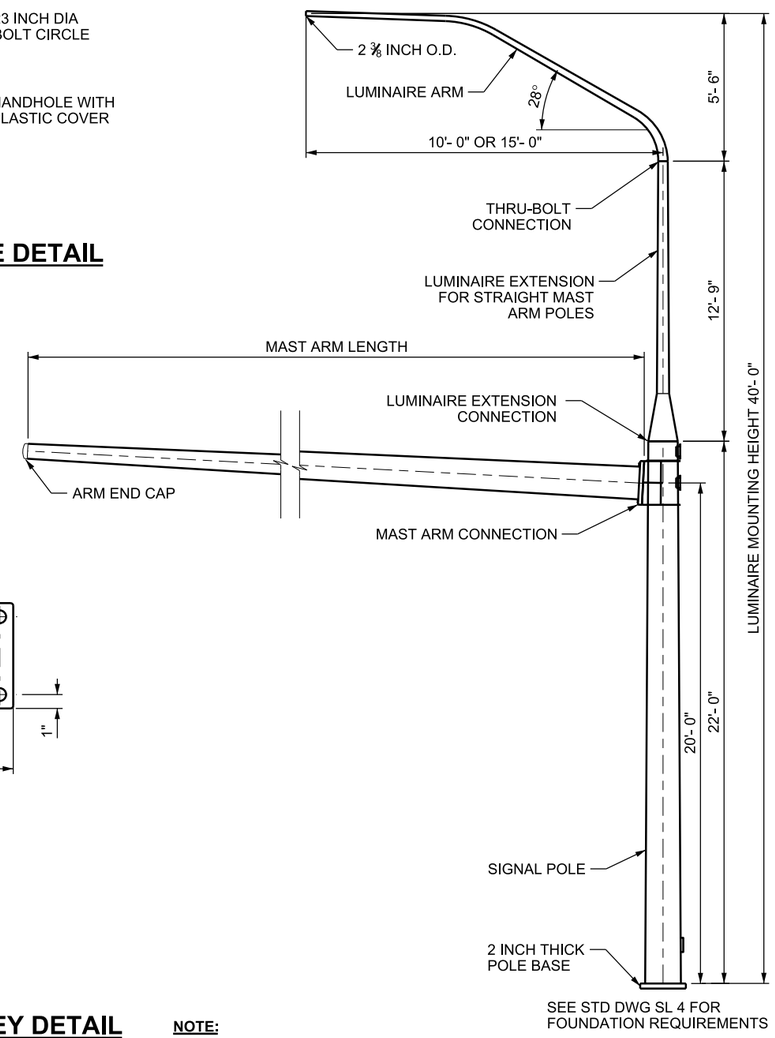

NOTE:

1. SEE STD DWG SL 1A FOR SIGNAL POLE AND MAST ARM GENERAL NOTES.

REVISIONS

NO.	DATE	APPR.	REMARKS

UTAH DEPARTMENT OF TRANSPORTATION
STANDARD DRAWINGS FOR ROAD AND BRIDGE CONSTRUCTION
SALT LAKE CITY, UTAH

RECOMMENDED FOR APPROVAL — JAN.01, 2017 (DATE)
CHAIRMAN STANDARDS COMMITTEE APPROVED — JAN.01, 2017 (DATE)
DEPUTY DIRECTOR

STANDARD DRAWING TITLE: TRAFFIC SIGNAL MAST ARM POLE AND LUMINAIRE EXTENSION 60 FT THROUGH 75 FT

STD. DWG. NO. SL 1B

DGN File:L:\Standard Drawings\Imperial\2017 Approved\1-All Drawings\SL01B.dgn
28-NOV-2016

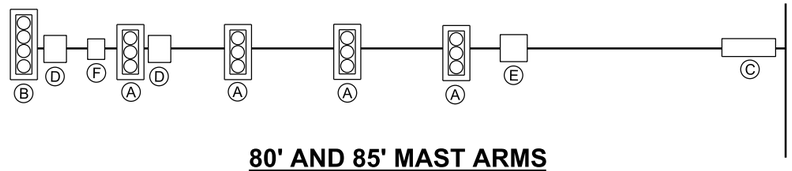

80' AND 85' MAST ARMS MAXIMUM LOADING

(SEE NOTE 8 AND 9 STD DWG SL 1A)

TYPICAL SIGNAL HEAD & SIGN PLACEMENT FOR MAXIMUM LOADING

DEVICE	DESCRIPTION/SIZE	MAXIMUM PROJECTED AREA (SF)	*MAXIMUM WEIGHT (LBS)	MOUNTING (SEE STD DWG SL 2C)
Ⓐ SIGNAL	12", 3-SECTION WITH BACK PLATE	8.7	55	BRACKET
Ⓑ SIGNAL	12", 4-SECTION WITH BACK PLATE	11.1	72	BRACKET
Ⓒ SIGN	STREET SIGN 18" x 96", OR	12.0	23	OPTION A
	24" x 120", (MAX) OR	20.0	38	OPTION B
	30" x 60"	12.5	24	OPTION A
Ⓓ SIGN	SIGN 30" x 36" (MAX)	7.5	15	OPTION A
Ⓕ SIGN	SIGN 24" x 24"	4.0	8	OPTION A
Ⓔ SIGN	BLANKOUT SIGN 36" x 36" (MAX)	9.0	80	BRACKET

*DOES NOT ACCOUNT FOR PROGRAMMABLE HEADS. SEE NOTE 9 AND STD DWG SL 1A.

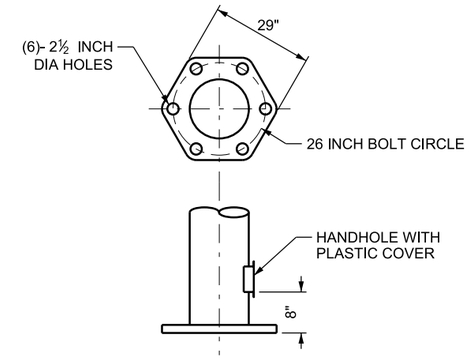

BASE PLATE DETAIL

(APPLIES TO TYPE C SIGNAL POLES)

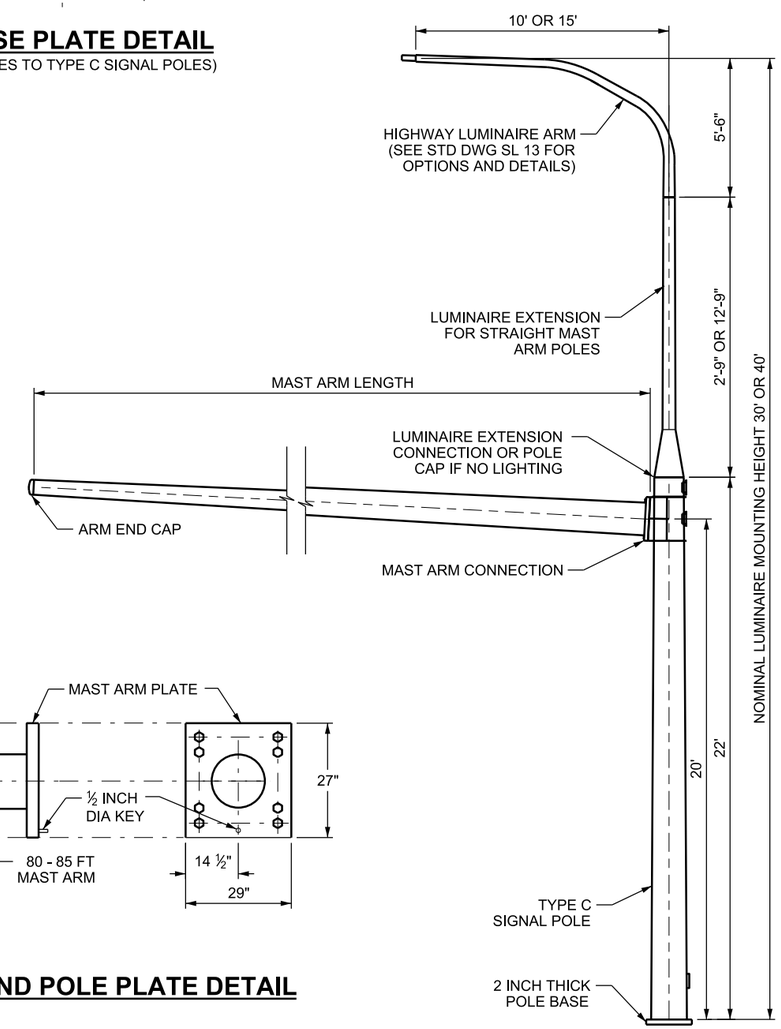

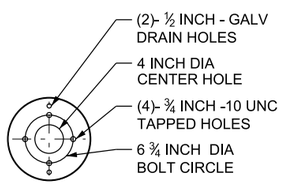

SECTION A-A

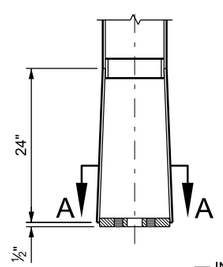

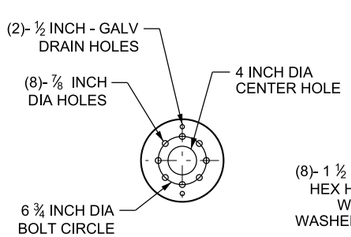

SECTION B-B

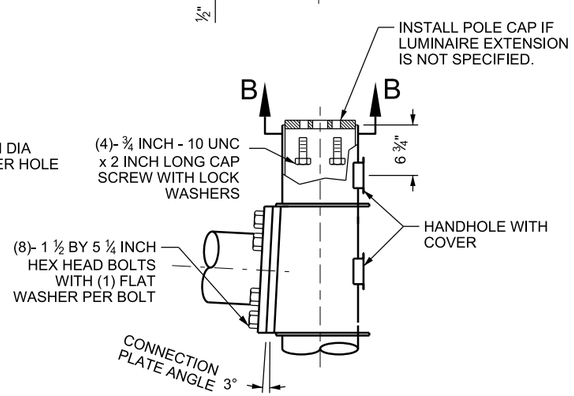

80' TO 85' MAST ARM POLE EXTENSION AND CONNECTION DETAIL

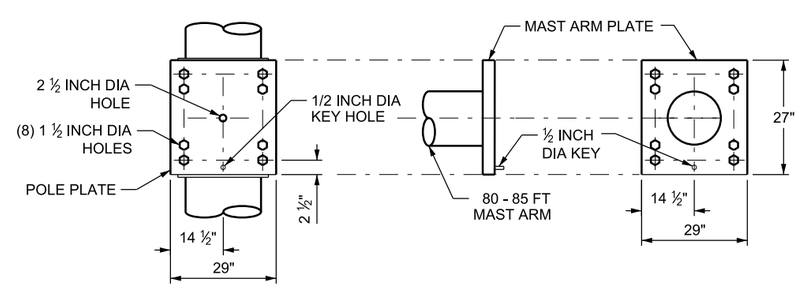

80' TO 85' MAST ARM AND POLE PLATE DETAIL

NOTE:

1. SEE STD DWG SL 1A FOR SIGNAL POLE AND MAST ARM GENERAL NOTES.

REVISIONS

NO.	DATE	APPR.	REMARKS

UTAH DEPARTMENT OF TRANSPORTATION
STANDARD DRAWINGS FOR ROAD AND BRIDGE CONSTRUCTION
SALT LAKE CITY, UTAH

RECOMMENDED FOR APPROVAL — JAN. 01, 2017 DATE
CHAIRMAN STANDARDS COMMITTEE APPROVED — JAN. 01, 2017 DATE
DEPUTY DIRECTOR

STANDARD DRAWING TITLE
TRAFFIC SIGNAL MAST ARM POLE AND LUMINAIRE EXTENSION 80 FT THROUGH 85 FT

STD. DWG. NO.
SL 1C

DGN File: L:\Standard Drawings\Imperial\2017 Approved\1-All Drawings\SL01C.dgn
28-NOV-2016

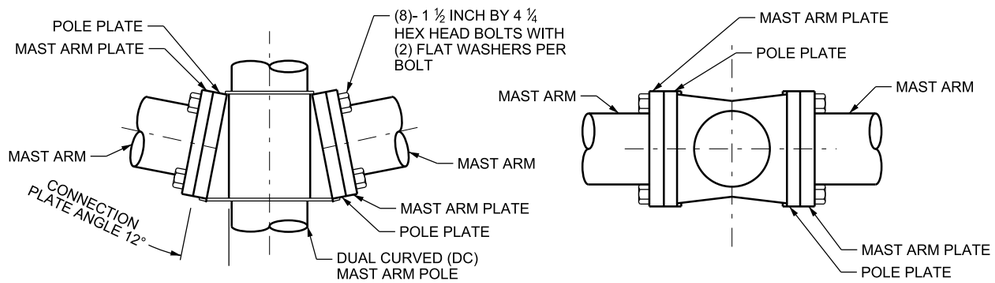

CURVED 180° 30' TO 45' DUAL MAST ARM POLE CONNECTION DETAIL

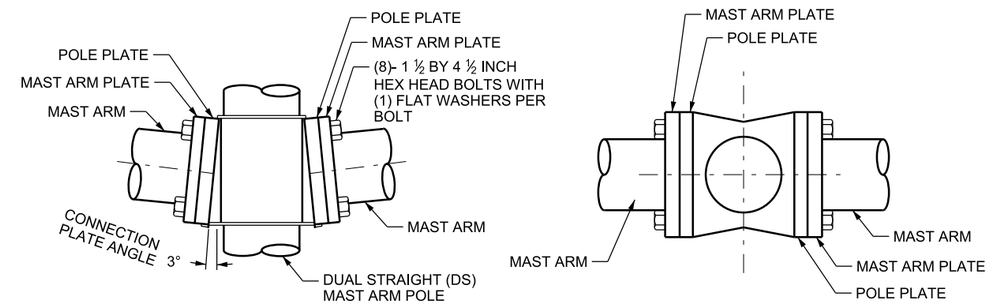

STRAIGHT 180° 40' TO 55' DUAL MAST ARM POLE CONNECTION DETAIL

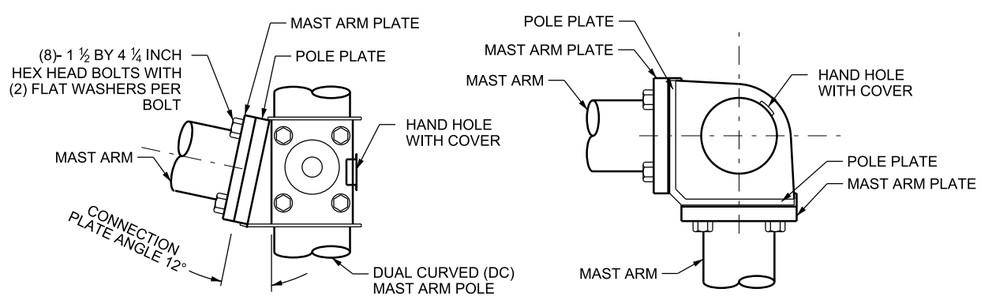

CURVED 90° 30' TO 45' DUAL MAST ARM POLE CONNECTION DETAIL

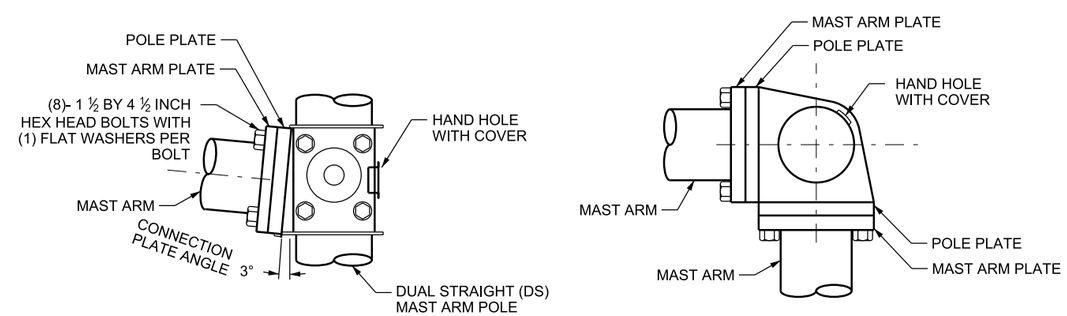

STRAIGHT 90° 40' TO 55' DUAL MAST ARM POLE CONNECTION DETAIL

DUAL CURVED MAST ARM CONNECTIONS

(SEE NOTE 3)

DUAL STRAIGHT MAST ARM CONNECTIONS

(SEE NOTE 4)

NOTES:

1. SEE STD DWG SL 1A FOR SIGNAL POLE AND MAST ARM GENERAL NOTES.
2. MAXIMUM LOADING CASES APPLY TO EACH MAST ARM.
3. SEE STD DWG SL 1A FOR MAXIMUM LOADING AND DETAILS FOR CURVED MAST ARMS.
4. SEE STD DWG SL 1B FOR MAXIMUM LOADING AND DETAILS FOR STRAIGHT MAST ARMS.

REVISIONS

NO.	DATE	APPR.	REMARKS

UTAH DEPARTMENT OF TRANSPORTATION
STANDARD DRAWINGS FOR ROAD AND BRIDGE CONSTRUCTION
SALT LAKE CITY, UTAH

RECOMMENDED FOR APPROVAL — JAN. 01, 2017 DATE
CHAIRMAN STANDARDS COMMITTEE APPROVED — JAN. 01, 2017 DATE
DEPUTY DIRECTOR

STANDARD DRAWING TITLE
TRAFFIC SIGNAL DUAL MAST ARM POLE

STD. DWG. NO.
SL 1D

DGN File: L:\Standard Drawings\Imperial\2017 Approved\1-All Drawings\SL01D.dgn
28-NOV-2016

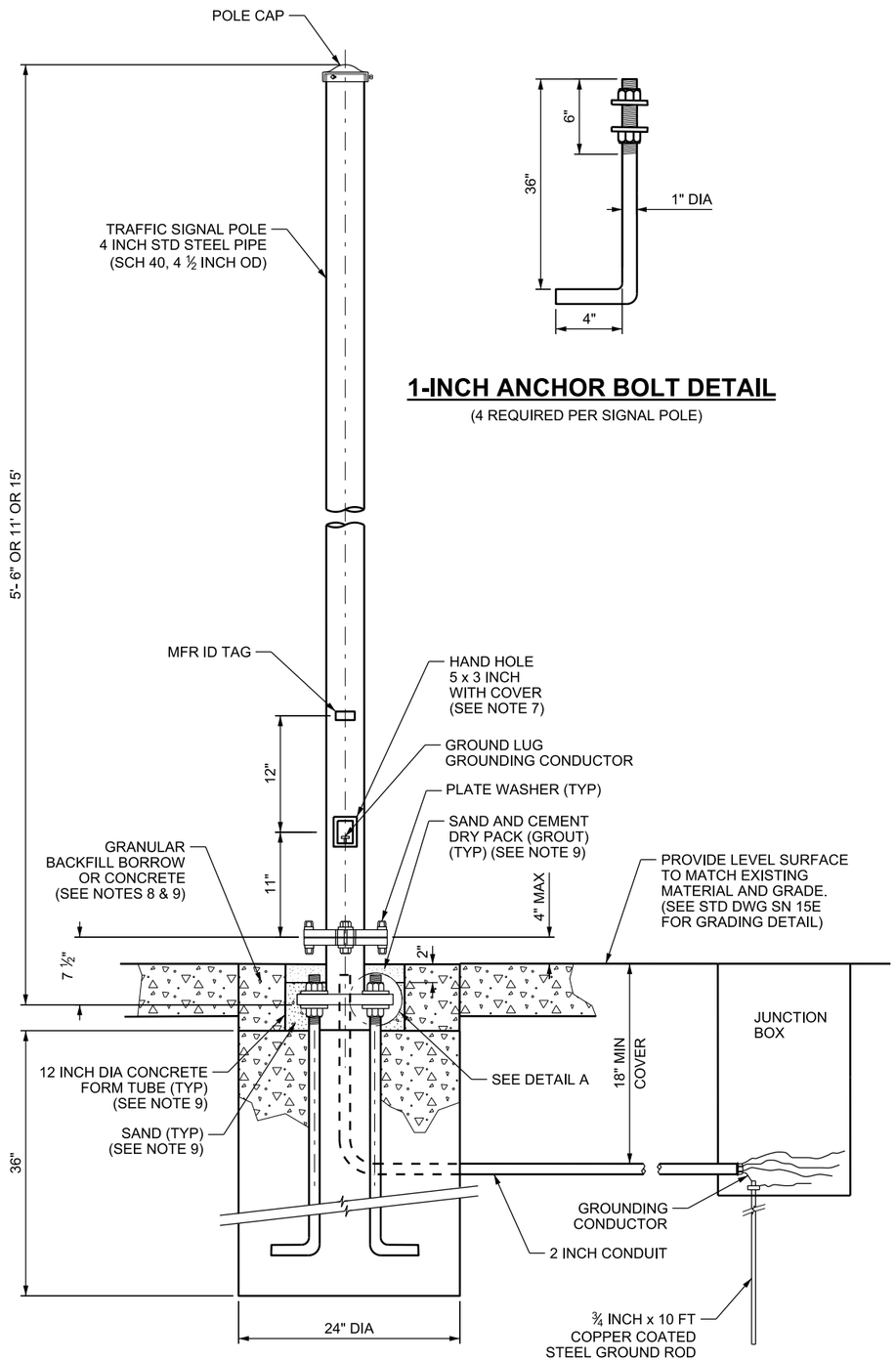

1-INCH ANCHOR BOLT DETAIL

(4 REQUIRED PER SIGNAL POLE)

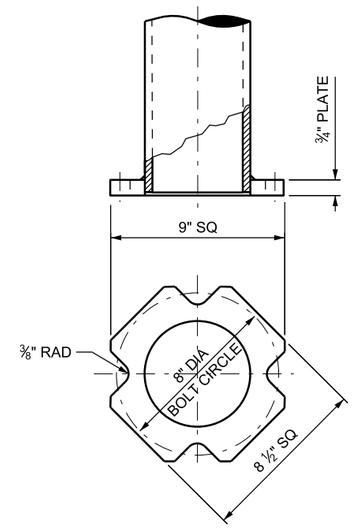

POLE BASE

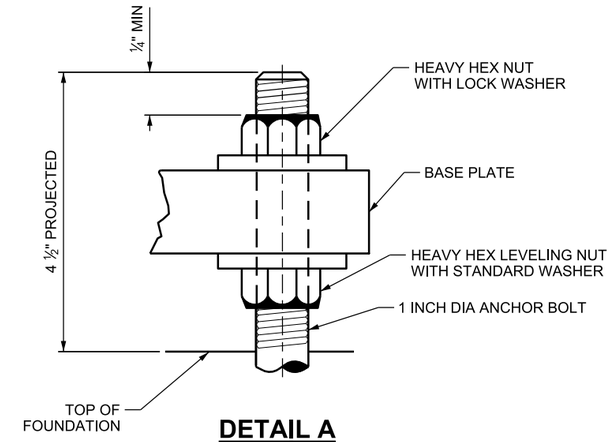

DETAIL A

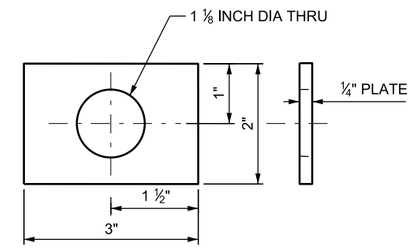

PLATE WASHER

FOR SLIP BASE BOLTS
(2 REQUIRED EACH BOLT)

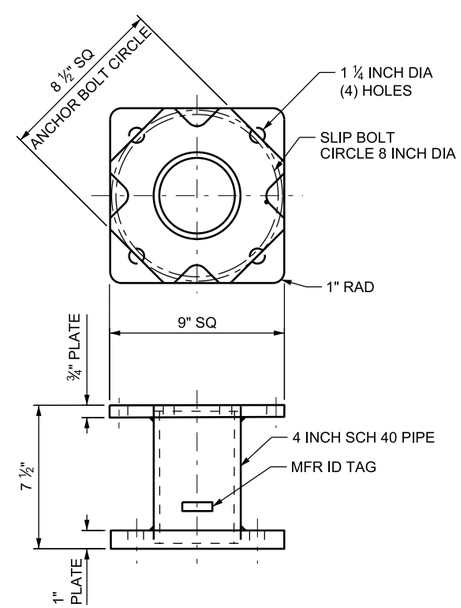

GROUND BASE

NOTES:

1. TRAFFIC SIGNAL POLE, SLIP BASE, FOUNDATION ANCHOR BOLTS, AND RELATED HARDWARE ARE STATE FURNISHED ITEMS.
2. ALL STEEL MATERIALS INCLUDING ANCHOR BOLTS ARE HOT-DIPPED GALVANIZED. AVOID DAMAGING THE GALVANIZED FINISH OF MATERIALS DURING TRANSPORT AND PLACEMENT.
3. USE CLASS AA(AE) CAST-IN-PLACE CONCRETE FOR FOUNDATION. CAP CONDUIT ON BOTH ENDS PRIOR TO PLACING CONCRETE.
4. USE STATE FURNISHED ⅝ x 3 INCH SLIP BOLTS. TORQUE EACH BOLT TO 80 FT-LBS. RELEASE AND RE-TORQUE TO 70 FT-LBS.
5. SEE STD DWG SN 15E FOR BREAKAWAY SUPPORT STUB HEIGHT MEASUREMENT.
6. REFER TO STD DWG SL 3A AND SL 6A FOR SIGNAL AND PEDESTRIAN HEAD DETAILS.
7. ORIENT SIGNAL POLE SUCH THAT A TECHNICIAN FACING THE HAND HOLE WILL FACE THE ROADWAY OR ONCOMING TRAFFIC.
8. MATCH EXISTING SURFACE IF SURROUNDING MATERIAL IS NOT CONCRETE. USE GRANULAR BACKFILL BORROW, IF FOUNDATION IS NOT SURROUNDED BY SURFACE TREATMENT, FROM TOP OF FOUNDATION TO FINISHED GRADE.
9. INSTALL 12 INCH DIAMETER CONCRETE FORM TUBE ON TOP OF FOUNDATION TO FINISHED GRADE IF SURROUNDING MATERIAL IS CONCRETE OR IF TRAFFIC SIGNAL POLE HAS A PEDESTRIAN PUSH BUTTON. FILL CONCRETE FORM TUBE WITH ⅜ INCH MAXIMUM WELL GRADED SAND TO 2 INCHES FROM FINISHED GRADE. INSTALL SAND AND CEMENT DRY PACK (GROUT) FROM TOP OF SAND TO FINISHED GRADE. INSTALL CONCRETE FROM TOP OF FOUNDATION TO FINISHED GRADE OUTSIDE CONCRETE FORM TUBE.

NO.	DATE	APPR.	REMARKS

REVISIONS

UTAH DEPARTMENT OF TRANSPORTATION
STANDARD DRAWINGS FOR ROAD AND BRIDGE CONSTRUCTION
SALT LAKE CITY, UTAH

RECOMMENDED FOR APPROVAL — JAN. 01, 2017 DATE
CHAIRMAN STANDARDS COMMITTEE APPROVED — JAN. 01, 2017 DATE
DEPUTY DIRECTOR

STANDARD DRAWING TITLE
TRAFFIC SIGNAL POLE

STD. DWG. NO.
SL 1E

DGN File: L:\Standard Drawings\Imperial\2017 Approved\1-All Drawings\SL01E.dgn
28-NOV-2016

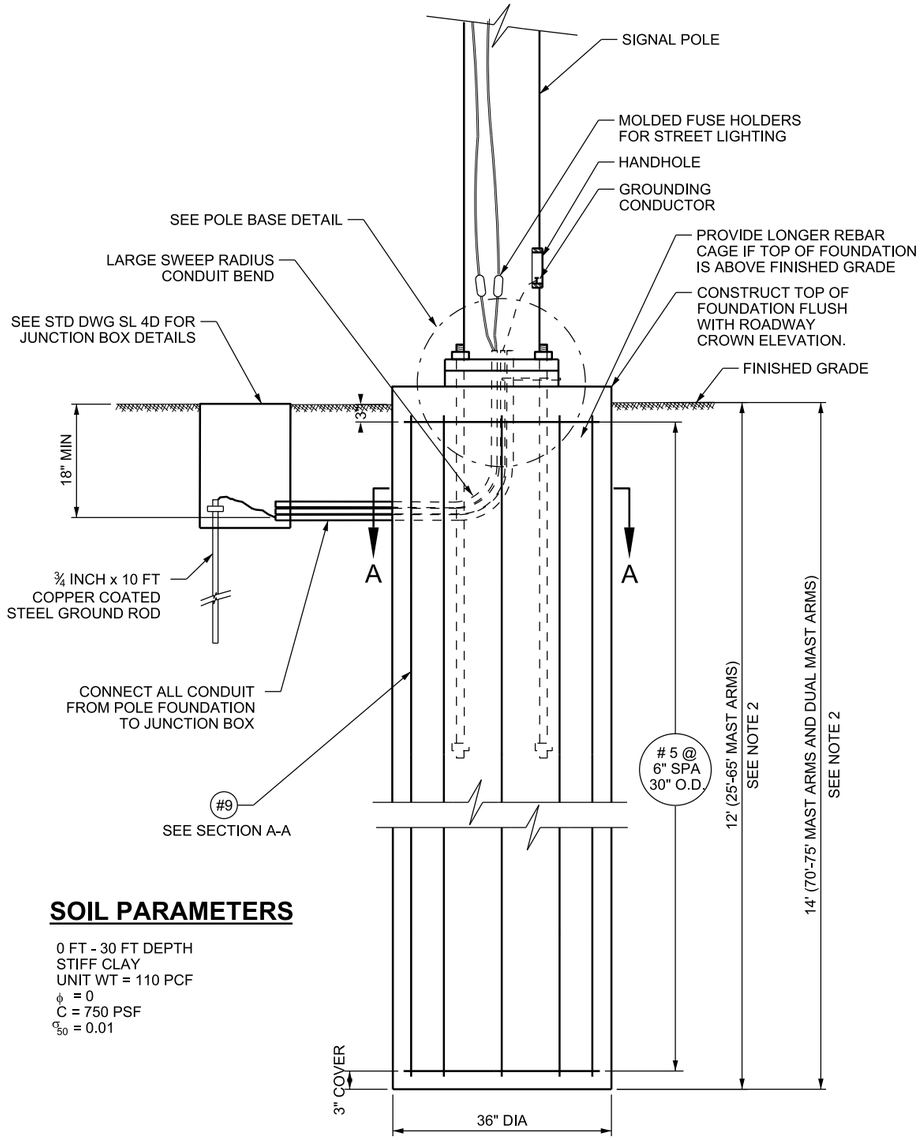

POLE FOUNDATION

SOIL PARAMETERS

0 FT - 30 FT DEPTH
STIFF CLAY
UNIT WT = 110 PCF
ϕ = 0
C = 750 PSF
ε_{50} = 0.01

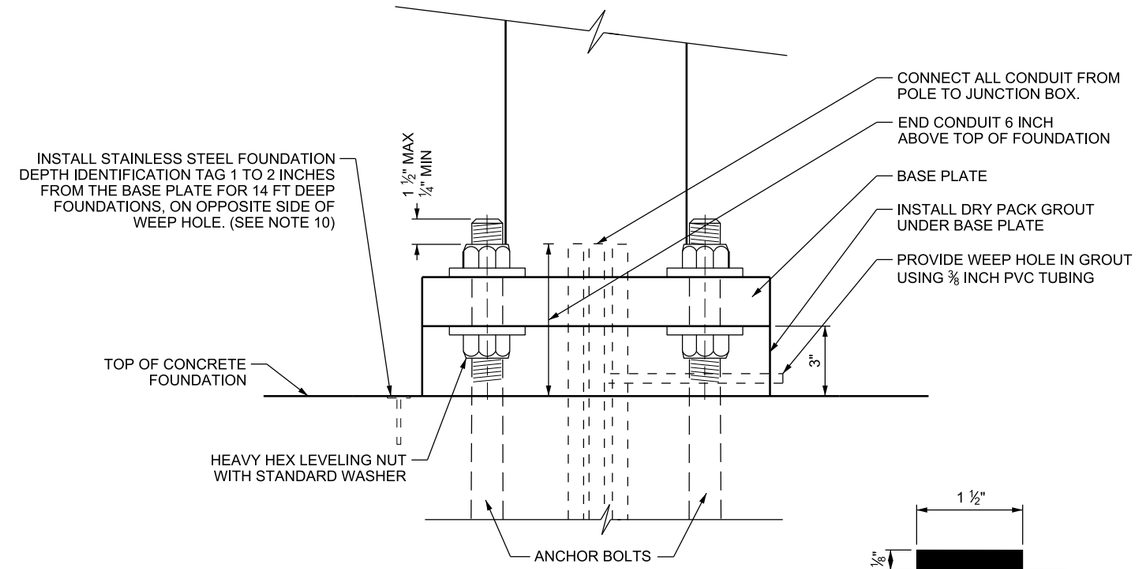

POLE BASE DETAIL

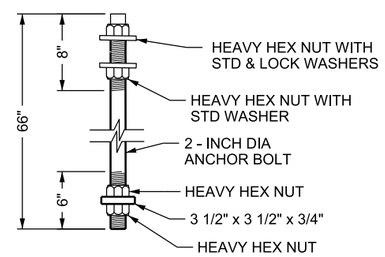

2-INCH ANCHOR BOLT DETAIL

(4 REQUIRED PER SIGNAL POLE)

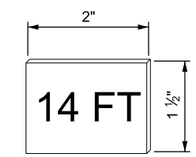

FOUNDATION DEPTH IDENTIFICATION TAG

TOP VIEW

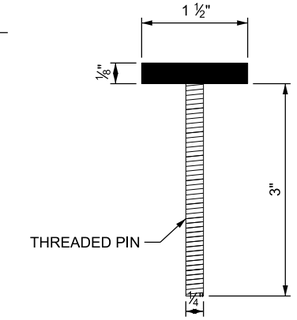

FOUNDATION DEPTH IDENTIFICATION TAG

ELEVATION VIEW

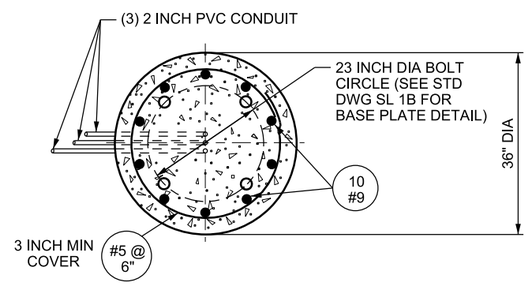

SECTION A-A

NOTES:

1. USE STATE FURNISHED 2 x 66 INCH ANCHOR BOLTS. TIGHTEN EACH BOLT TO SNUG-TIGHT PLUS ⅓ TURN. DO NOT WELD ANCHOR BOLT TO THE REINFORCING STEEL.
2. CAST FOUNDATIONS IN PLACE AGAINST UNDISTURBED EARTH. 12 FT FOUNDATIONS WILL HAVE 12 FT OF ITS LENGTH BELOW FINISH GRADE AND 14 FT FOUNDATIONS WILL HAVE 14 FT OF ITS LENGTH BELOW FINISH GRADE. USE A CIRCULAR FORM FOR THE TOP 18 INCHES OF FOUNDATION EMBEDMENT.
3. DO NOT WELD REINFORCING STEEL.
4. PLACE ALL CONDUIT IN SAME TRENCH WHERE POSSIBLE.
5. USE COATED REBAR AND CLASS AA(AE) CONCRETE FOR FOUNDATION.
6. CAP CONDUIT ON BOTH ENDS PRIOR TO FOUNDATION POUR.
7. FOUNDATION MAY BE A MAXIMUM OF 18 INCHES ABOVE THE CROWN IF ROADWAY IS A HIGH LOAD ROUTE.
8. PROVIDE MINIMUM 10 FT HORIZONTAL EDGE-TO-EDGE CLEARANCE BETWEEN SIGNAL MAST ARM FOUNDATIONS.
9. PROVIDE AND INSTALL FOUNDATION DEPTH IDENTIFICATION TAG IN FOUNDATIONS 14 FT DEEP. INSTALL 1 TO 2 INCHES FROM THE BASE PLATE AS SHOWN. DRILL HOLE AND INSTALL TAG IN EPOXY FILLED MEDIUM 24 HOURS AFTER CONCRETE IS PLACED IF TAG IS NOT INSTALLED DURING CONCRETE PLACEMENT.
10. CONSTRUCT TOP OF FOUNDATION ELEVATION TO MATCH ELEVATION AT BACK OF SIDEWALK; OR 2 PERCENT GRADE HIGHER THAN TBC; OR WITH THE ROADWAY CENTERLINE OVER WHICH THE MAST ARM WILL HANG, WHICHEVER IS HIGHEST.

REVISIONS

NO.	DATE	APPR.	REMARKS

UTAH DEPARTMENT OF TRANSPORTATION
STANDARD DRAWINGS FOR ROAD AND BRIDGE CONSTRUCTION
SALT LAKE CITY, UTAH

RECOMMENDED FOR APPROVAL — JAN. 01, 2017 DATE
CHAIRMAN STANDARDS COMMITTEE APPROVED — JAN. 01, 2017 DATE
DEPUTY DIRECTOR

TRAFFIC SIGNAL MAST ARM POLE FOUNDATION 25 FT THROUGH 75 FT

STANDARD DRAWING TITLE

STD. DWG. NO.
SL 2A

DGN File:L:\Standard Drawings\Imperial\2017 Approved\1-All Drawings\SL02A.dgn
28-NOV-2016

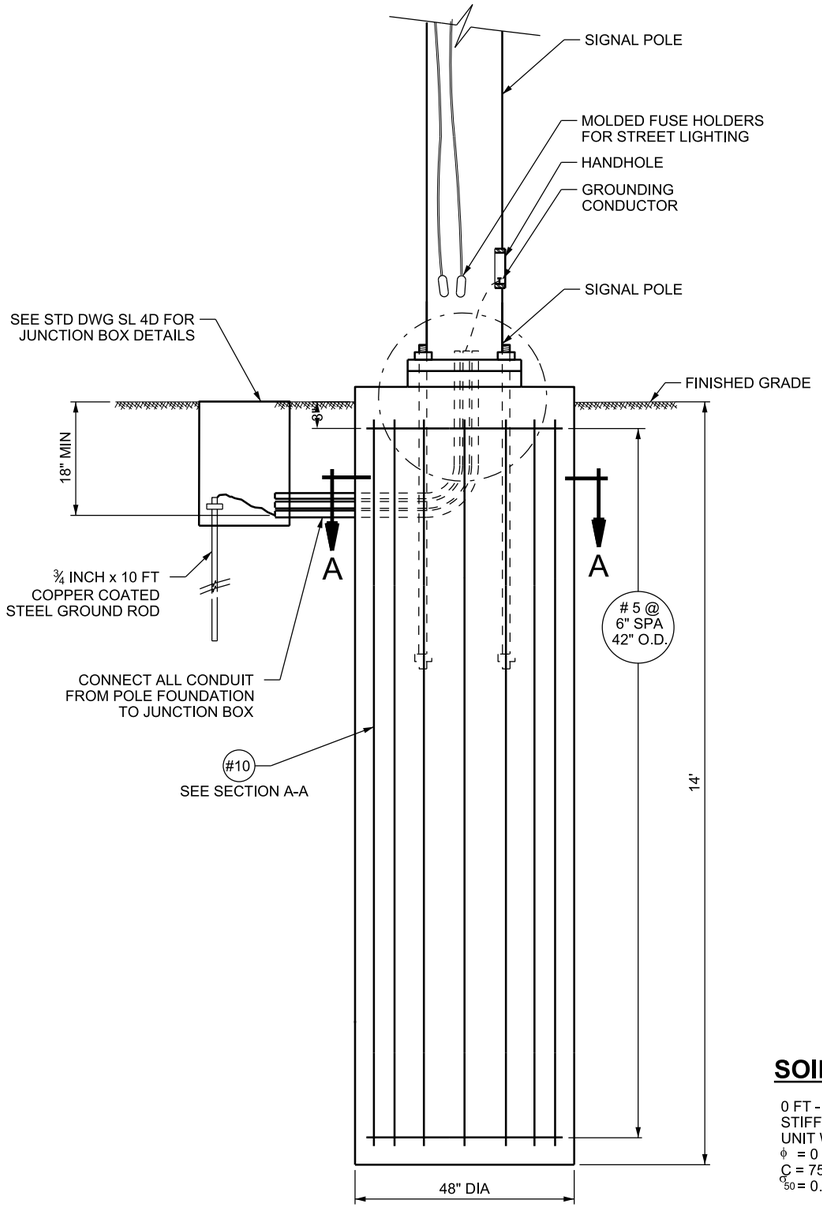

80'- 85' POLE FOUNDATION

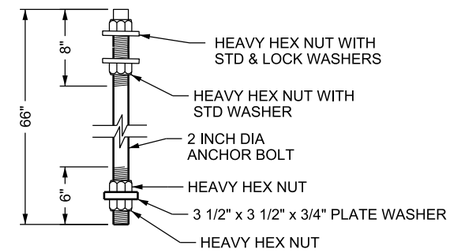

2-INCH ANCHOR BOLT DETAIL

(6 REQUIRED PER SIGNAL POLE)

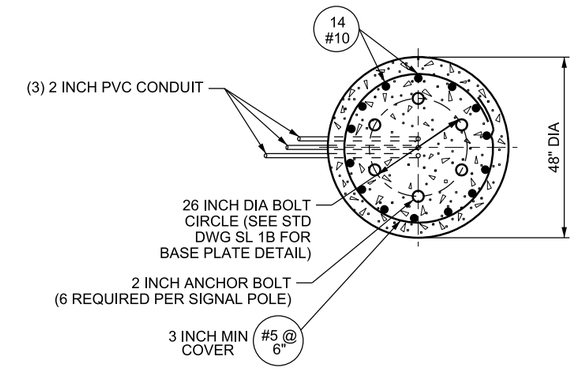

SECTION A-A

SOIL PARAMETERS

0 FT - 30 FT DEPTH
STIFF CLAY
UNIT WT = 110 PCF
ϕ = 0
C = 750 PSF
ϵ_{50} = 0.01

NOTES:

1. USE STATE FURNISHED 2 x 66 INCH ANCHOR BOLTS. TIGHTEN EACH BOLT TO SNUG-TIGHT PLUS ⅓ TURN. DO NOT WELD ANCHOR BOLT TO THE REINFORCING STEEL.
2. CAST FOUNDATIONS IN PLACE AGAINST UNDISTURBED EARTH. FOUNDATIONS WILL HAVE 14 FT OF ITS LENGTH BELOW FINISH GRADE. USE A CIRCULAR FORM FOR THE TOP 18 INCHES OF FOUNDATION EMBEDMENT.
3. DO NOT WELD REINFORCING STEEL.
4. PLACE ALL CONDUIT IN SAME TRENCH WHERE POSSIBLE.
5. USE COATED REBAR AND CLASS AA(AE) CONCRETE FOR FOUNDATION.
6. CAP CONDUIT ON BOTH ENDS PRIOR TO FOUNDATION POUR.
7. FOUNDATION MAY BE A MAXIMUM OF 18 INCHES ABOVE THE CROWN IF ROADWAY IS A HIGH LOAD ROUTE.
8. PROVIDE MINIMUM 10 FT HORIZONTAL EDGE-TO-EDGE CLEARANCE BETWEEN SIGNAL MAST ARM FOUNDATIONS.
9. PROVIDE AND INSTALL FOUNDATION DEPTH IDENTIFICATION TAG. SEE STD DWG SL 2A FOR POLE BASE DETAIL AND FOUNDATION DEPTH IDENTIFICATION TAG DETAILS.
10. CONSTRUCT TOP OF FOUNDATION ELEVATION TO MATCH ELEVATION AT BACK OF SIDEWALK; OR 2 PERCENT GRADE HIGHER THAN TBC; OR WITH THE ROADWAY CENTERLINE OVER WHICH THE MAST ARM WILL HANG, WHICHEVER IS HIGHEST.

REVISIONS

NO.	DATE	APPR.	REMARKS

UTAH DEPARTMENT OF TRANSPORTATION
STANDARD DRAWINGS FOR ROAD AND BRIDGE CONSTRUCTION
SALT LAKE CITY, UTAH

RECOMMENDED FOR APPROVAL — JAN. 01, 2017 DATE
CHAIRMAN STANDARDS COMMITTEE APPROVED — JAN. 01, 2017 DATE
DEPUTY DIRECTOR

STANDARD DRAWING TITLE
TRAFFIC SIGNAL MAST ARM POLE FOUNDATION 80 FT AND 85 FT

STD. DWG. NO.
SL 2B

DGN File:L:\Standard Drawings\Imperial\2017 Approved\1-All Drawings\SL02B.dgn
28-NOV-2016

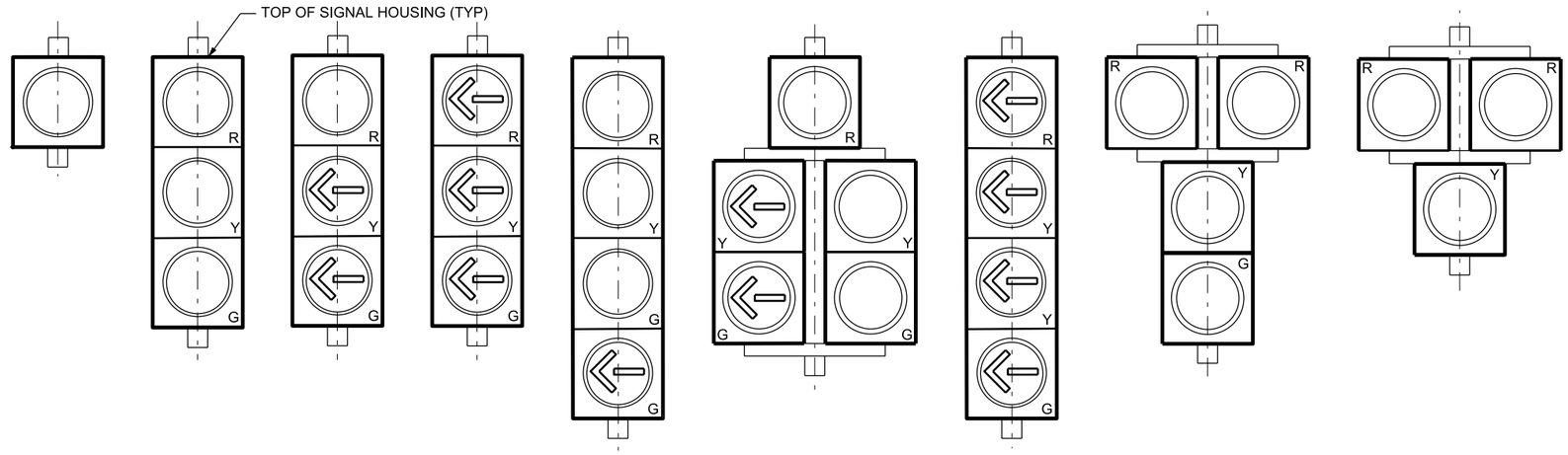

TYPE 0 **TYPE I** **TYPE II** **TYPE III** **TYPE IV** **TYPE V** **TYPE VI** **TYPE VII** **HYBRID BEACON**

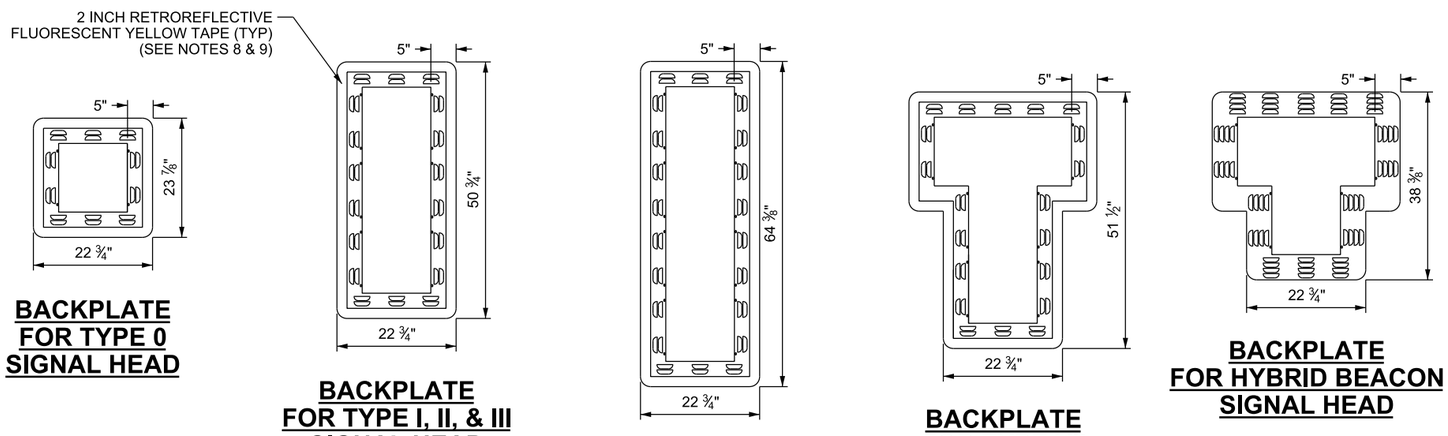

BACKPLATE FOR TYPE 0 SIGNAL HEAD

BACKPLATE FOR TYPE I, II, & III SIGNAL HEAD

BACKPLATE FOR TYPE IV, & VI SIGNAL HEAD

BACKPLATE FOR TYPE VII SIGNAL HEAD

BACKPLATE FOR HYBRID BEACON SIGNAL HEAD

LOUVERED BACKPLATE DETAILS

MAXIMUM MOUNTING HEIGHT OF SIGNAL FACES BETWEEN 40 FT AND 49 FT FROM STOP LINE (SEE NOTE A)

HORIZONTAL DISTANCE FROM STOP LINE (FT)	HEIGHT TO TOP OF SIGNAL HOUSING ABOVE PAVEMENT (FT)
40	21
42	21.7
44	22.4
46	23.1
48	23.8
49	24.2

NOTES:

1. USE 12 x 12 INCH BALLCAP/CUTAWAY VISORS FOR TRAFFIC SIGNALS. USE FULL VISORS WHEN THE INTERSECTION IS SKEWED.
2. APPLY A BEAD OF SILICONE AROUND VISORS.
3. ALL EXTERIOR AND INTERIOR OF THE SIGNAL HOUSING, DOOR, AND OUTSIDE OF VISOR TO BE HIGHWAY YELLOW. INSIDE OF VISOR IS PAINTED FLAT BLACK. BOTH SIDES OF BACKPLATES PRIMED AND PAINTED FLAT BLACK.
4. LOCATE TERMINAL BLOCK IN TOP SECTION FOR TYPE I, II, III, IV, AND VI SIGNAL HEADS. REFER TO STD DWG SL 3C FOR WIRE PATH AND TERMINAL BLOCK LOCATIONS FOR TYPE V, TYPE VII, AND HYBRID BEACON SIGNAL HEADS.
5. INSTALL TYPE V, TYPE VII, AND HYBRID BEACON SIGNAL ASSEMBLIES SO THAT HINGED SIGNAL FACES SWING OPEN TO THE OUTSIDE.
6. ORIENT ALL LED LENSES FOR TOP UPWARD ALIGNMENT UNLESS OTHERWISE SPECIFIED ON PLAN SHEETS.
7. PROVIDE BACKPLATE FOR ALL TYPE 0, I, II, III, IV, VI, VII, HYBRID BEACON SIGNAL HEADS. PROVIDE BACKPLATE FOR TYPE V SIGNAL HEADS ONLY AS SPECIFIED.
8. INSTALL 2 INCH RETROREFLECTIVE YELLOW TAPE-ASTM TYPE XI AROUND OUTSIDE EDGE OF BACKPLATES EXCEPT AS STATED IN NOTE 9.
9. DO NOT APPLY RETROREFLECTIVE TAPE TO SIGNAL HEADS ON RAMP METERS, PEDESTRIAN HYBRID BEACONS, PEDESTRIAN FLASHING BEACONS, AWS, OR REDUCED SPEED SCHOOL ZONE ASSEMBLIES.
10. RIVETED ASSEMBLY OF MULTI-PIECE BACKPLATES IS REQUIRED.
11. ALL SIGNAL HEAD FUNCTIONS TO BE CONTROLLED BY THE SIGNAL CONTROLLER IN THE SIGNAL CABINET.

DESIGN-ONLY NOTES:

A. OBTAIN APPROVAL FOR PLACEMENT OF SIGNAL FACES LESS THAN 50 FT FROM STOP LINE FROM THE ENGINEER.

REVISIONS

NO.	DATE	APPR.	REMARKS

UTAH DEPARTMENT OF TRANSPORTATION
STANDARD DRAWINGS FOR ROAD AND BRIDGE CONSTRUCTION
SALT LAKE CITY, UTAH

RECOMMENDED FOR APPROVAL — JAN. 01, 2017 DATE
CHAIRMAN STANDARDS COMMITTEE APPROVED — JAN. 01, 2017 DATE
DEPUTY DIRECTOR

STANDARD DRAWING TITLE: TRAFFIC SIGNAL HEADS

STD. DWG. NO. SL 3A

DGN File: L:\Standard Drawings\Imperial\2017 Approved\1-All Drawings\SL03A.dgn
28-NOV-2016

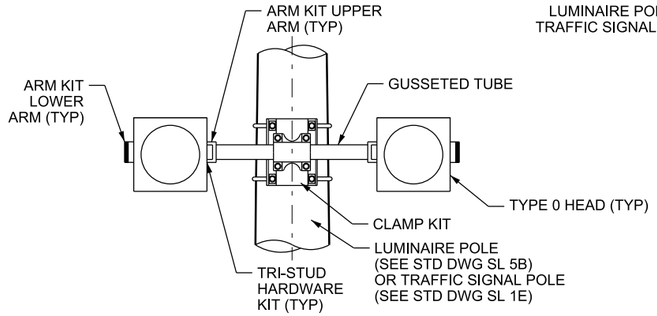

ELEVATION VIEW

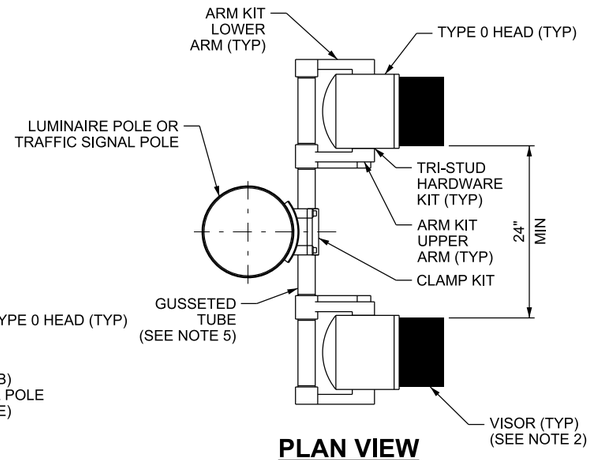

PLAN VIEW

TYPE 0 POST MOUNT - CLAMP BRACKET

LUMINAIRE POLE OR
4 ½ INCH OD SIGNAL POLE (OPTIONAL)

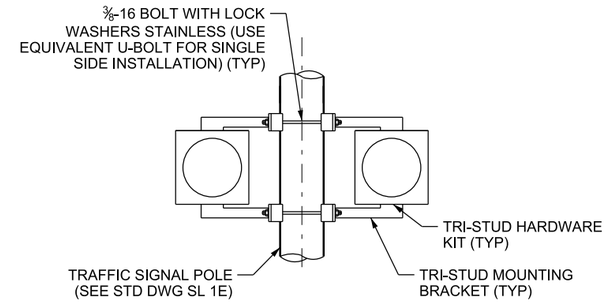

TYPE 0 POST MOUNT - BOLT BRACKET

4 ½ INCH OD SIGNAL POLE (PREFERRED)

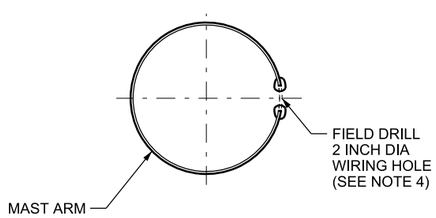

WIRE ENTRY HOLE DETAIL

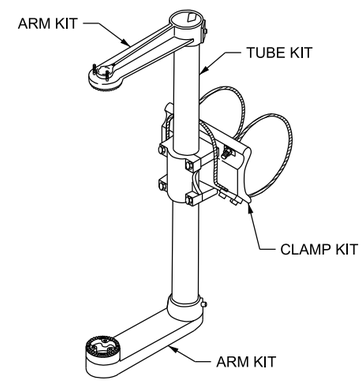

SIGNAL HEAD MOUNTING BRACKET DETAIL

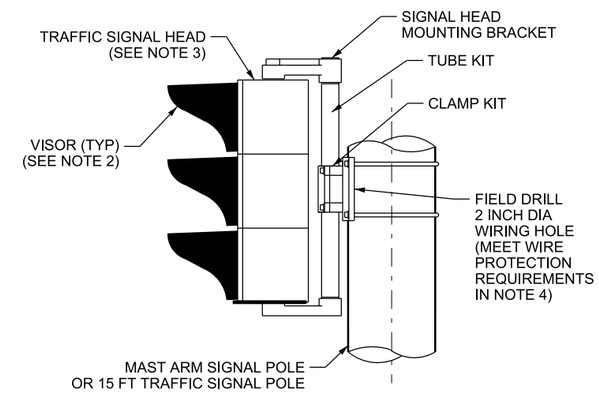

SIGNAL POLE MOUNT

NOTES:

1. SEE STD DWG SL 1A FOR SIGNAL POLE AND MAST ARM GENERAL NOTES.
2. SEE STD DWG SL 3A FOR SIGNAL HEAD DETAILS, BACK PLATE, AND VISOR REQUIREMENTS.
3. PROVIDE AN 8 FT MINIMUM AND 19 FT MAXIMUM CLEARANCE FROM BOTTOM OF NEARSIDE SIGNAL HEADS, INCLUDING BACK PLATES AND BRACKETS, TO TOP OF SIDEWALK OR PAVEMENT CROWN ELEVATION.
4. FIELD DRILL 2 INCH DIAMETER WIRING HOLE ALONG THE HORIZONTAL CENTROID OF THE MAST ARM AT EACH SIGNAL HEAD LOCATION. DEBURR THE HOLE PRIOR TO INSTALLING SIGNAL HEAD BRACKET.
5. PROVIDE A SINGLE GUSSETED TUBE THAT EXTENDS THROUGH BOTH UPPER ARM KITS AND THREADS INTO LOWER ARM KITS.

REVISIONS

NO.	DATE	APPR.	REMARKS

UTAH DEPARTMENT OF TRANSPORTATION
STANDARD DRAWINGS FOR ROAD AND BRIDGE CONSTRUCTION
SALT LAKE CITY, UTAH

RECOMMENDED FOR APPROVAL — JAN. 01, 2017 DATE
CHAIRMAN STANDARDS COMMITTEE APPROVED — JAN. 01, 2017 DATE
DEPUTY DIRECTOR

TRAFFIC SIGNAL MOUNTING

STANDARD DRAWING TITLE

STD. DWG. NO.
SL 3B

28-NOV-2016 DGN File:L:\Standard Drawings\Imperial\2017 Approved\1-All Drawings\SL03B.dgn

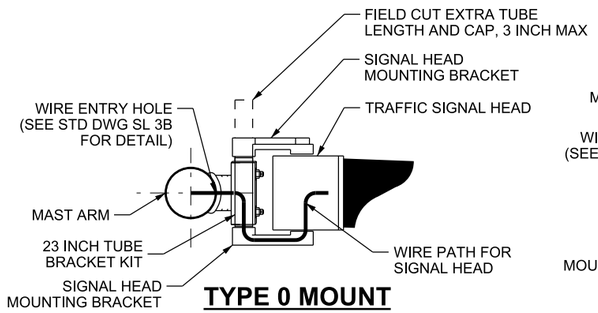

TYPE 0 MOUNT

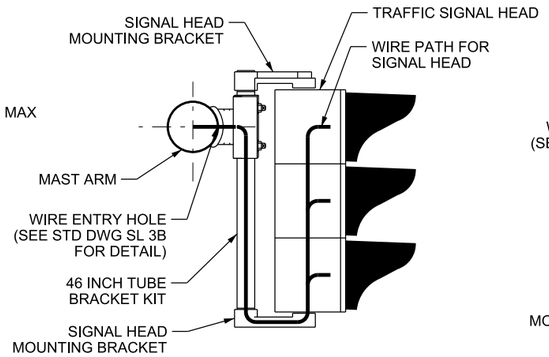

TYPE I, II, AND III MOUNT

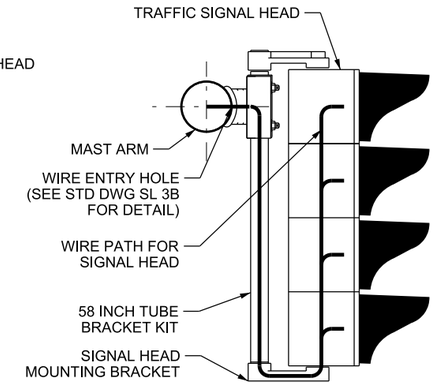

TYPE IV AND VI MOUNT

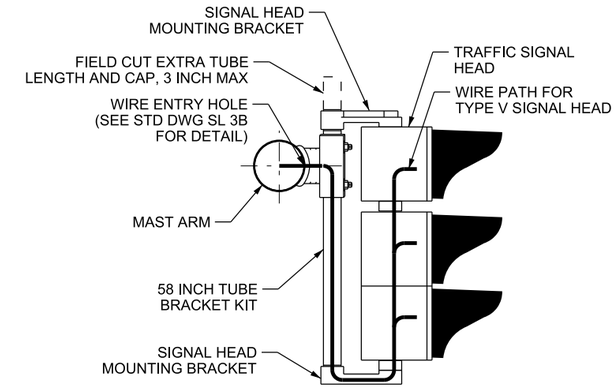

TYPE V AND VII MOUNT

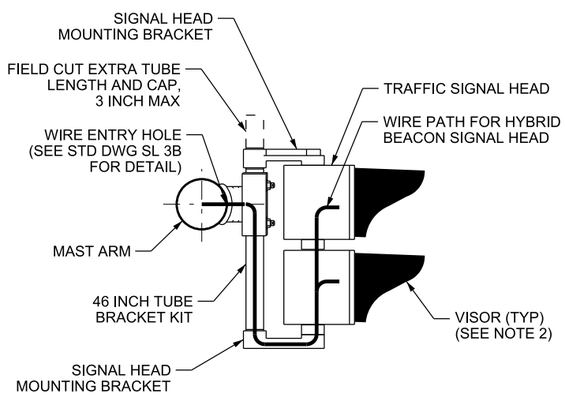

HYBRID BEACON MOUNT

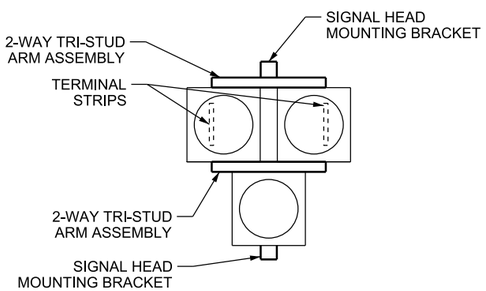

HYBRID BEACON CONFIGURATION

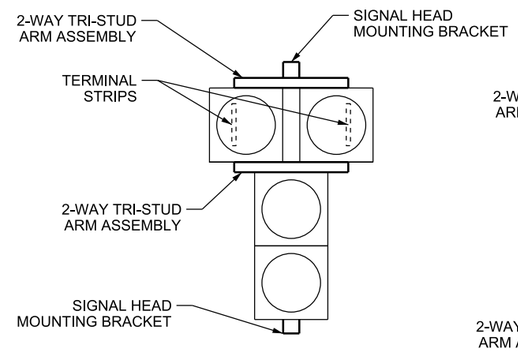

TYPE VII CONFIGURATION

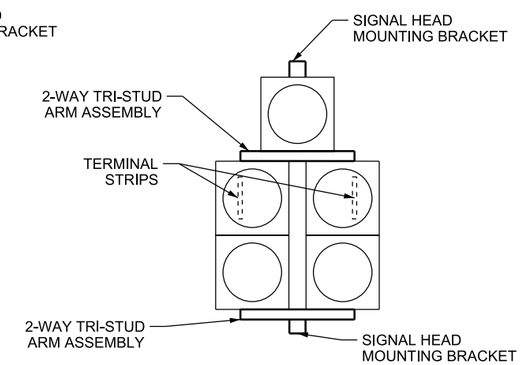

TYPE V CONFIGURATION

NOTES:

1. SEE STD DWG SL 1A FOR SIGNAL POLE AND MAST ARM GENERAL NOTES.
2. SEE STD DWG SL 3A FOR SIGNAL HEAD DETAILS, BACK PLATE, AND VISOR REQUIREMENTS.
3. PROVIDE AND INSTALL SIGNAL HEAD MOUNTING BRACKET. PROVIDE 24 INCH SLACK IN WIRE IN SIGNAL HEAD SO SIGNAL HEAD CAN ADJUST UP AND DOWN THE FULL EXTENT OF THE TUBE.
4. DO NOT STRIP BACK SIGNAL CABLE OUTER SHEATHING EXCEPT WITHIN THE SIGNAL HEAD. MAINTAIN THE OUTER SHEATHING THROUGH THE TUBE BRACKET KIT AND MOUNTING BRACKET.
5. SEE STD DWG SL 3B FOR SIGNAL HEAD MOUNTING BRACKET DETAIL.

REVISIONS

NO.	DATE	APPR.	REMARKS

UTAH DEPARTMENT OF TRANSPORTATION
STANDARD DRAWINGS FOR ROAD AND BRIDGE CONSTRUCTION
SALT LAKE CITY, UTAH

RECOMMENDED FOR APPROVAL — JAN. 01, 2017 DATE
CHAIRMAN STANDARDS COMMITTEE APPROVED — JAN. 01, 2017 DATE
DEPUTY DIRECTOR

TRAFFIC SIGNAL MOUNTING
STANDARD DRAWING TITLE

STD. DWG. NO.
SL 3C

28-NOV-2016 DGN File:L:\Standard_Drawings\Imperial\2017 Approved\1-All Drawings\SL03C.dgn

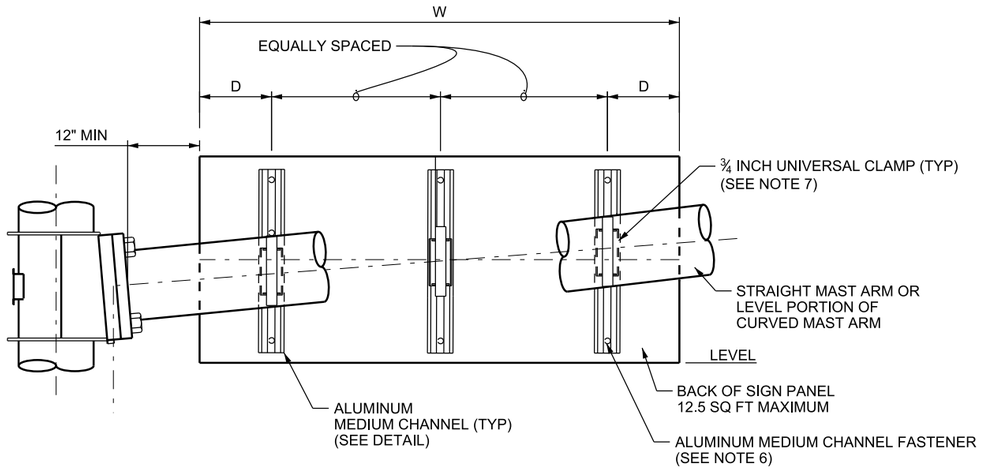

OPTION A MAST ARM SIGN MOUNT

(SEE TABLE 1)
(SEE NOTE 3)

TABLE 1
DIMENSIONS OF OPTION A

WIDTH OF SIGN (W, INCH)	D (INCH)	NUMBER OF MEDIUM CHANNELS
W ≤ 48	W/4	2
48 < W ≤ 96	12	3

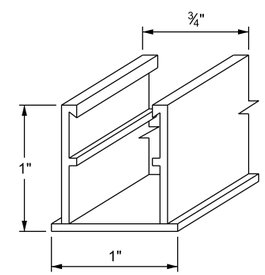

ALUMINUM MEDIUM CHANNEL DETAIL

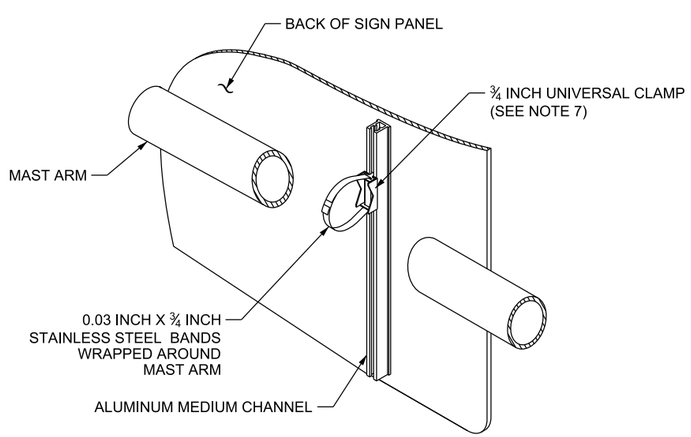

OPTION A INSTALLATION DETAIL

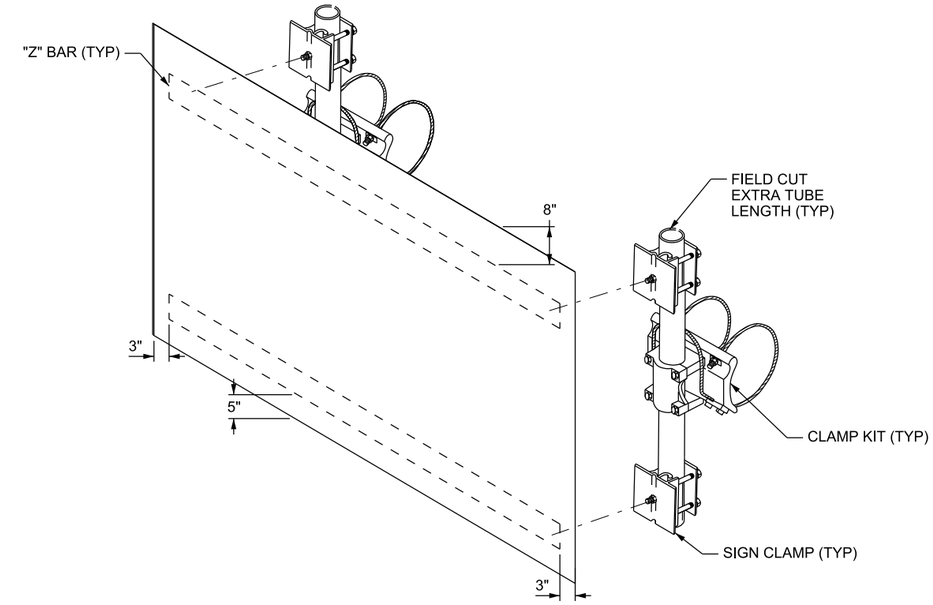

OPTION B MAST ARM SIGN MOUNT FOR LARGE SIGNS

HEIGHT: 24 TO 36 INCHES
(SEE NOTES 4 AND 5)

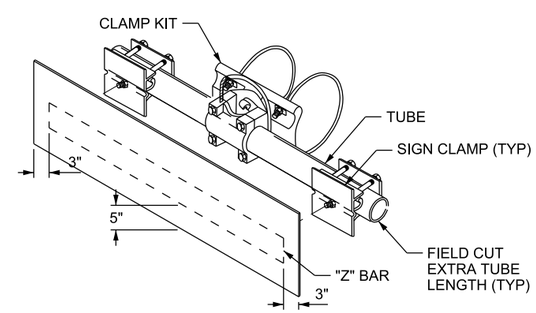

OPTION B MAST ARM SIGN MOUNT FOR SMALL SIGNS

HEIGHT: 18 INCHES OR LESS
(SEE NOTES 4 AND 5)

NOTES:

1. SEE SL 1 SERIES STD DWGS FOR MOUNTING OPTION ASSIGNMENTS OF MAST ARM SIGNS.
2. PROVIDE MINIMUM 18 FT- 6 INCH CLEARANCE FROM THE BOTTOM OF THE SIGN OR SIGN MOUNTING ASSEMBLY TO THE HIGHEST POINT ON THE ROADWAY SURFACE UNDER THE SIGN.
3. USE MAST ARM SIGN MOUNT OPTION A ONLY FOR SIGNS LESS THAN OR EQUAL TO 12.5 SQ FT ON STRAIGHT MAST ARMS OR ON THE LEVEL PORTION OF CURVED MAST ARMS.
4. USE 2 SIGN CLAMPS FOR SIGNS UP TO 3 FT LONG. USE 4 SIGN CLAMPS FOR SIGNS 3 FT TO 8 FT LONG. USE 6 SIGN CLAMPS FOR SIGNS LONGER THAN 8 FT.
5. MOUNT CENTER OF "Z" BAR 5 INCHES FROM THE BOTTOM EDGE OF SIGN. PROVIDE 3 INCHES FROM ENDS OF "Z" BAR TO BOTH EDGES OF SIGN. CONNECT THE OUTERMOST SIGN CLAMP 3 INCHES FROM THE ENDS OF THE "Z" BAR. USE STAINLESS STEEL TRUSS BOLTS FOR SIGN FASTENING. SEE STD DWG SN 9B.
6. ATTACH THE ALUMINUM MEDIUM CHANNEL TO SIGN PANEL WITH STAINLESS STEEL BOLTS, TAPPING SCREWS OR POP RIVETS AS SPECIFIED. USE ADHESIVE ONLY WHEN SHOP APPLIED. NO FIELD ADHESIVE IS ALLOWED.
7. ADJUST UNIVERSAL CLAMP LOCATION TO LEVEL SIGN. SEE STD DWG SN 10 FOR ¾ INCH UNIVERSAL CLAMP DETAILS.

REVISIONS

NO.	DATE	APPR.	REMARKS

UTAH DEPARTMENT OF TRANSPORTATION
STANDARD DRAWINGS FOR ROAD AND BRIDGE CONSTRUCTION
SALT LAKE CITY, UTAH

RECOMMENDED FOR APPROVAL — JAN. 01, 2017 DATE
CHAIRMAN STANDARDS COMMITTEE APPROVED — JAN. 01, 2017 DATE
DEPUTY DIRECTOR

MAST ARM SIGN MOUNTING
STANDARD DRAWING TITLE

STD. DWG. NO.
SL 3D

DGN File: L:\Standard_Drawings\Imperial\2017 Approved\L-All Drawings\SL030.dgn
28-NOV-2016

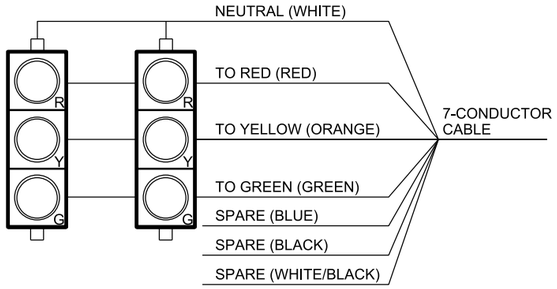

TYPE I SIGNAL HEAD WIRE ASSIGNMENT

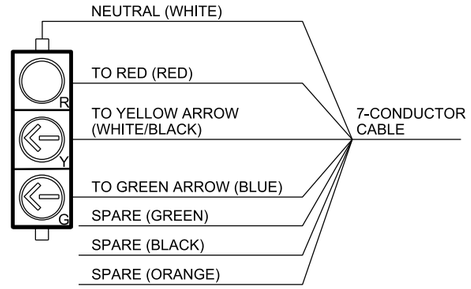

TYPE II SIGNAL HEAD WIRE ASSIGNMENT

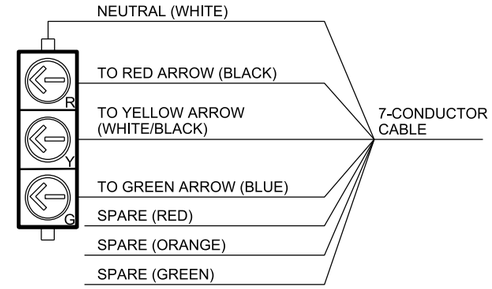

TYPE III SIGNAL HEAD WIRE ASSIGNMENT

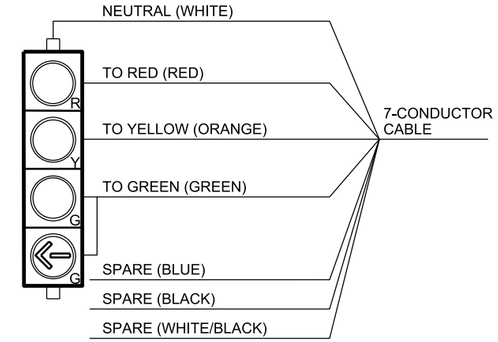

TYPE IV SIGNAL HEAD WIRE ASSIGNMENT

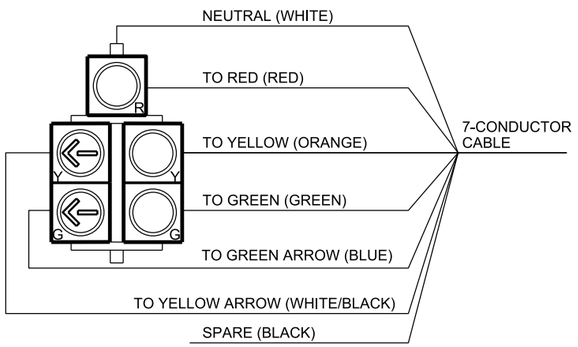

TYPE V SIGNAL HEAD WIRE ASSIGNMENT

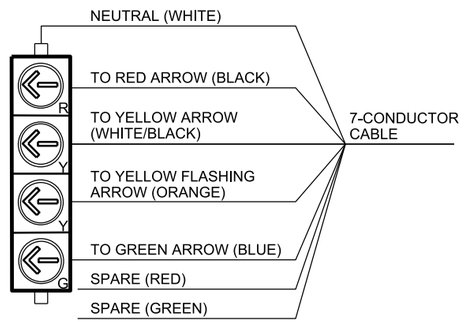

TYPE VI SIGNAL HEAD WIRE ASSIGNMENT

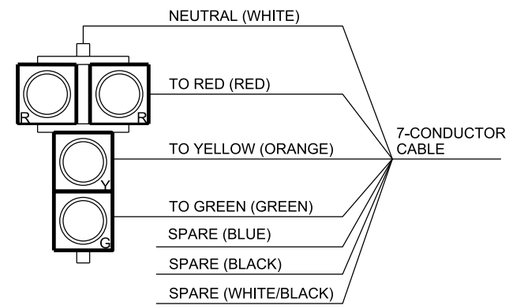

TYPE VII SIGNAL HEAD WIRE ASSIGNMENT

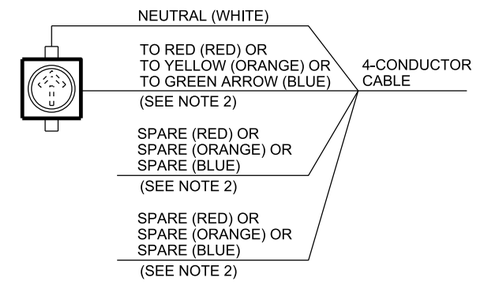

TYPE 0 SIGNAL HEAD WIRE ASSIGNMENT

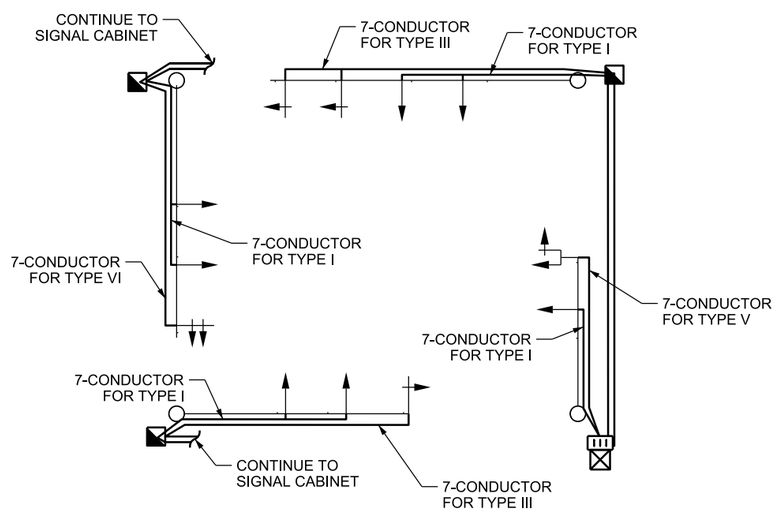

TYPICAL WIRING DIAGRAM (DEPICTING VARIOUS LEFT TURN TREATMENTS)

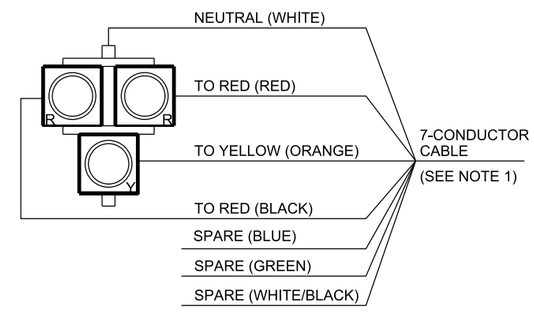

HYBRID BEACON WIRE ASSIGNMENT

NOTES:

1. A 4-CONDUCTOR MAY BE USED FOR HYBRID BEACONS AS APPROVED BY THE ENGINEER.

DESIGN-ONLY NOTES:

A. A 4-CONDUCTOR MAY BE USED FOR HYBRID BEACONS AS APPROVED BY THE ENGINEER.

LEGEND

- MAST ARM SIGNAL POLE
- TYPE I SIGNAL HEAD
- TYPE III SIGNAL HEAD
- TYPE V SIGNAL HEAD
- TYPE VI SIGNAL HEAD
- SIGNAL JUNCTION BOX
- TYPE IIII JUNCTION BOX
- SIGNAL CABINET

REVISIONS

NO.	DATE	APPR.	REMARKS

UTAH DEPARTMENT OF TRANSPORTATION
STANDARD DRAWINGS FOR ROAD AND BRIDGE CONSTRUCTION
SALT LAKE CITY, UTAH

RECOMMENDED FOR APPROVAL — JAN. 01, 2017 DATE
CHAIRMAN STANDARDS COMMITTEE APPROVED — JAN. 01, 2017 DATE
DEPUTY DIRECTOR

TRAFFIC SIGNAL HEAD WIRING

STANDARD DRAWING TITLE

STD. DWG. NO.
SL 3E

DGN File:L:\Standard_Drawings\Imperial\2017 Approved\1-All Drawings\SL03E.dgn
28-NOV-2016

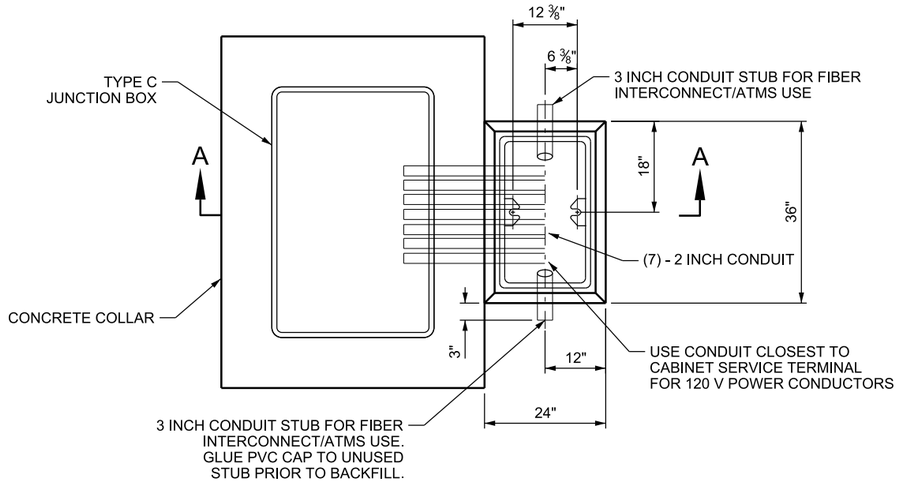

TYPE 5 CABINET BASE

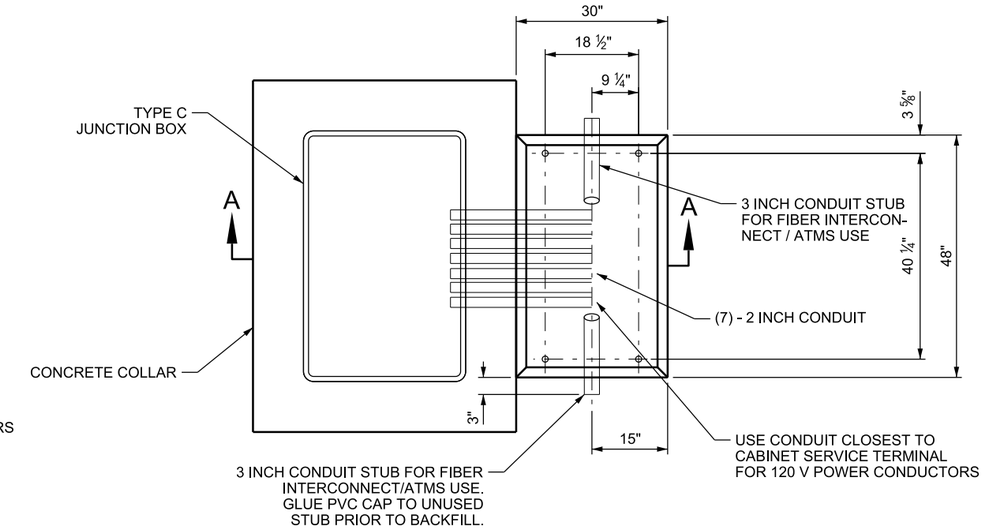

TYPE 6 CABINET BASE

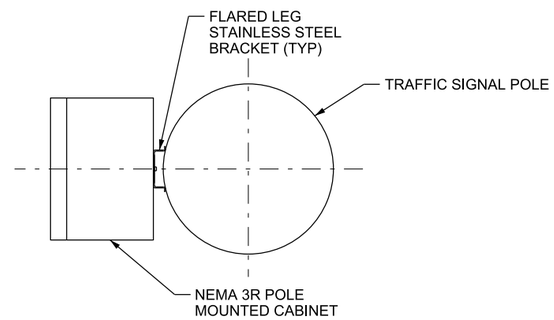

PLAN VIEW

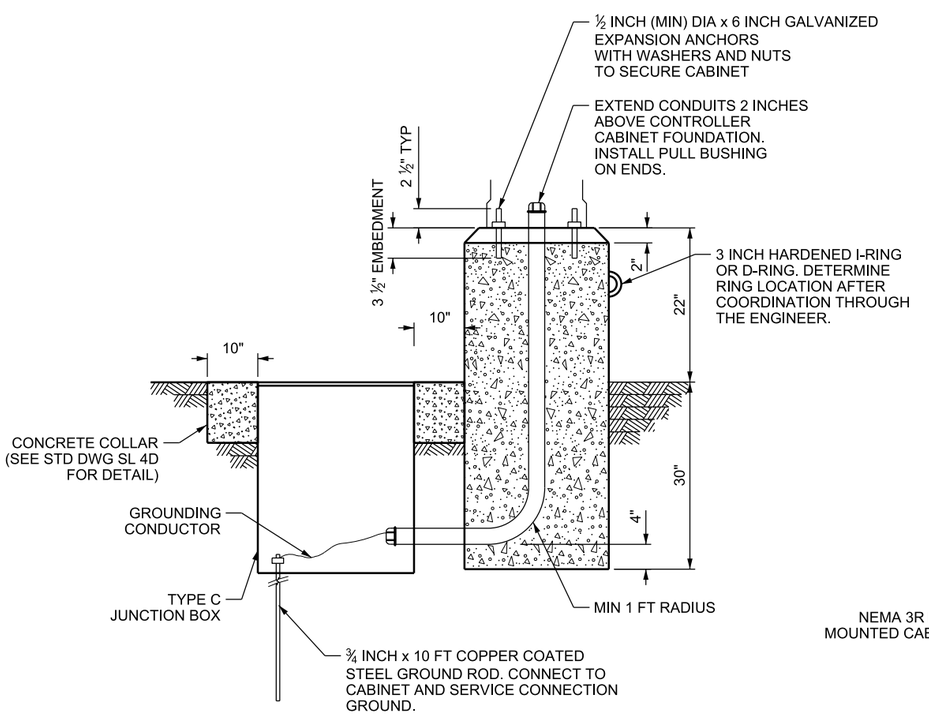

SECTION A-A

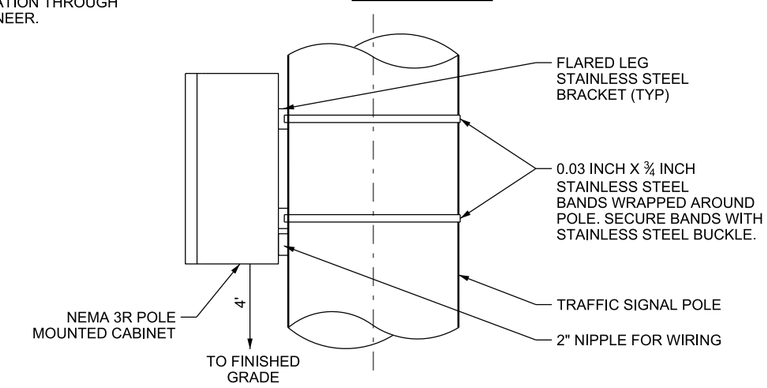

ELEVATION VIEW

POLE MOUNTED SIGNAL CABINET

NOTES:

1. ATTACH THE GROUNDED SIDE OF THE SERVICE PEDESTAL POWER SUPPLY TO GROUND ROD IN THE TYPE C JUNCTION BOX.
2. MAINTAIN 1 INCH MINIMUM SPACING BETWEEN CONDUITS IN CABINET BASE. CAP OR PLUG CONDUITS AT BOTH ENDS UNTIL USED.
3. GROUND CABINET BY CONNECTING GROUND WIRE TO GROUND ROD IN TYPE C JUNCTION BOX.
4. SEAL ALL CONDUIT ENDS WITH 2 INCHES OF DUCT SEAL AFTER WIRING IS COMPLETE.
5. USE CONCRETE CLASS AA (AE) FOR SIGNAL CABINET BASE AND JUNCTION BOX COLLAR. SIGNAL CABINET BASE MAY BE PRECAST OR CAST-IN-PLACE. CAST-IN-PLACE IS PREFERRED FOR NEW CONSTRUCTION. OBTAIN WRITTEN APPROVAL FROM THE ENGINEER TO USE PRECAST ON NEW CONSTRUCTION.
6. INSTALL PULL BUSHING ON ALL CONDUIT ENDS BEFORE INSTALLING WIRING.

DESIGN-ONLY NOTES:

A. USE POLE MOUNTED CABINET AT FLASHING BEACON ASSEMBLY ONLY. TYPE 6 CABINET REQUIRED AT ALL OTHER SIGNAL APPLICATIONS UNLESS SUBSTITUTION IS APPROVED BY REGION SIGNAL ENGINEER.

REVISIONS

NO.	DATE	APPR.	REMARKS

UTAH DEPARTMENT OF TRANSPORTATION
STANDARD DRAWINGS FOR ROAD AND BRIDGE CONSTRUCTION
SALT LAKE CITY, UTAH

RECOMMENDED FOR APPROVAL — JAN. 01, 2017 DATE
CHAIRMAN STANDARDS COMMITTEE APPROVED — JAN. 01, 2017 DATE
DEPUTY DIRECTOR

TRAFFIC SIGNAL CABINET BASE AND POLE MOUNTED CABINET
STANDARD DRAWING TITLE

STD. DWG. NO.
SL 4A

DGN File: L:\Standard Drawings\Imperial\2017 Approved\1-All Drawings\SL04A.dgn
28-NOV-2016

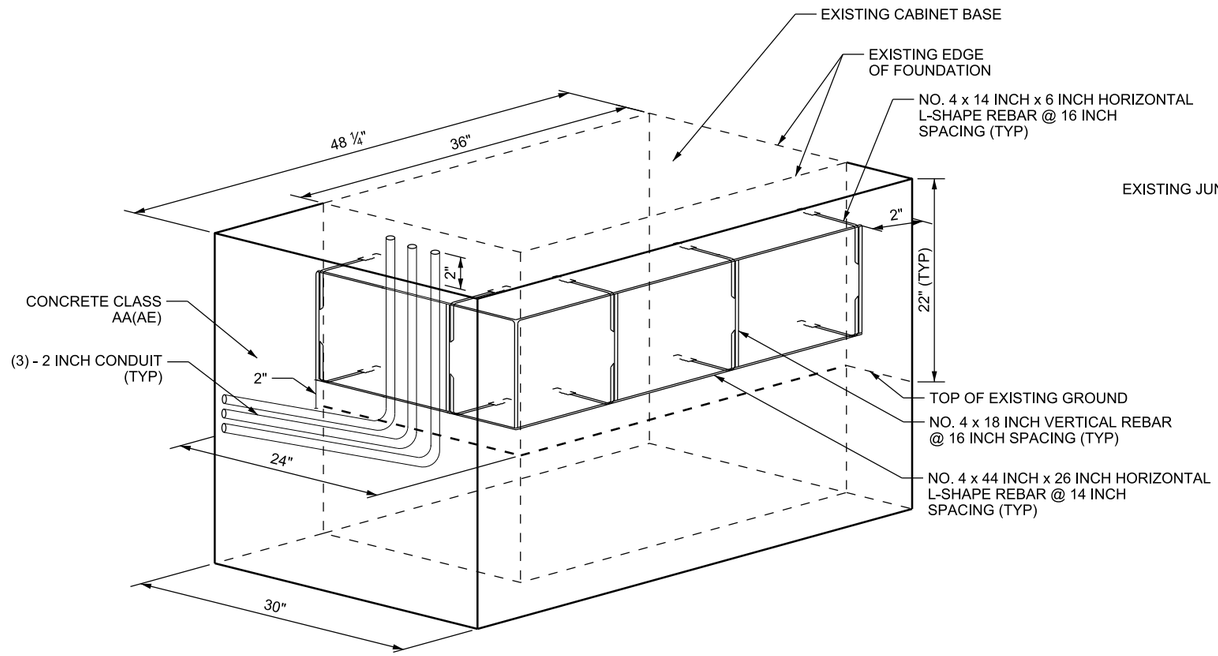

ISOMETRIC VIEW

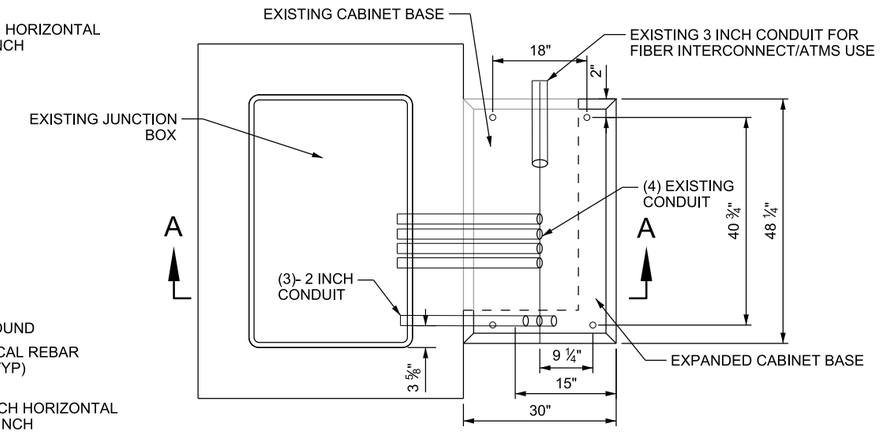

PLAN VIEW

TYPE 6 CABINET BASE EXPANSION

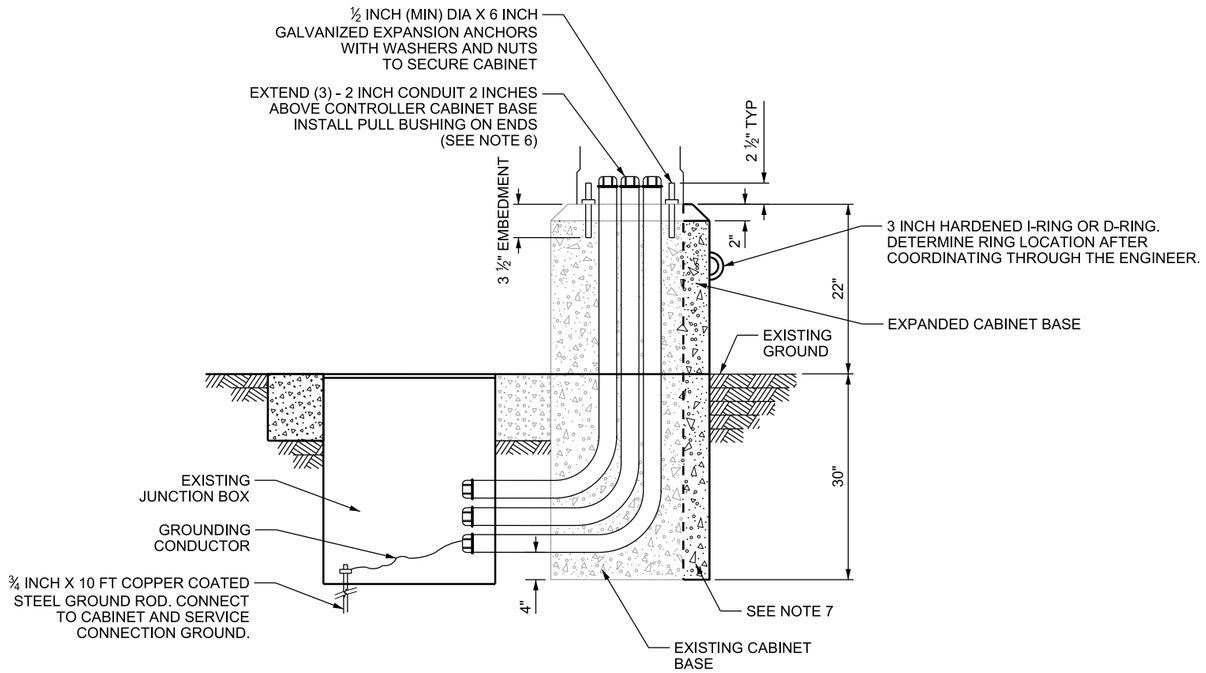

SECTION A-A

NOTES:

1. MAINTAIN 1 INCH MINIMUM SPACING BETWEEN CONDUITS IN CABINET BASE.
2. GROUND CABINET BY CONNECTING GROUND WIRE TO GROUND ROD IN EXISTING JUNCTION BOX.
3. SEAL ALL CONDUIT ENDS WITH 2 INCHES OF DUCT SEAL AFTER WIRING IS COMPLETE.
4. USE CONCRETE CLASS AA (AE) FOR SIGNAL CABINET BASE EXPANSION.
5. INSTALL PULL BUSHING ON ALL CONDUIT ENDS BEFORE INSTALLING WIRING.
6. INSTALL NEW CONDUITS WITH A MINIMUM 1 INCH CLEARANCE INSIDE THE NEW CABINET FLANGE.
7. EXTEND CABINET EXPANSION BASE TO THE FOLLOWING DEPTHS:
   A. PRE-CAST: BOTTOM OF EXISTING BASE
   B. CAST-IN-PLACE: AS DEEP AS EXISTING BASE PERMITS

REVISIONS

NO.	DATE	APPR.	REMARKS

UTAH DEPARTMENT OF TRANSPORTATION
STANDARD DRAWINGS FOR ROAD AND BRIDGE CONSTRUCTION
SALT LAKE CITY, UTAH

RECOMMENDED FOR APPROVAL — JAN. 01, 2017 DATE
CHAIRMAN STANDARDS COMMITTEE APPROVED — JAN. 01, 2017 DATE
DEPUTY DIRECTOR

TRAFFIC SIGNAL CABINET BASE EXPANSION
STANDARD DRAWING TITLE

STD. DWG. NO.
SL 4B

DGN File: L:\Standard Drawings\Imperial\2017 Approved\1-All Drawings\SL04B.dgn
28-NOV-2016

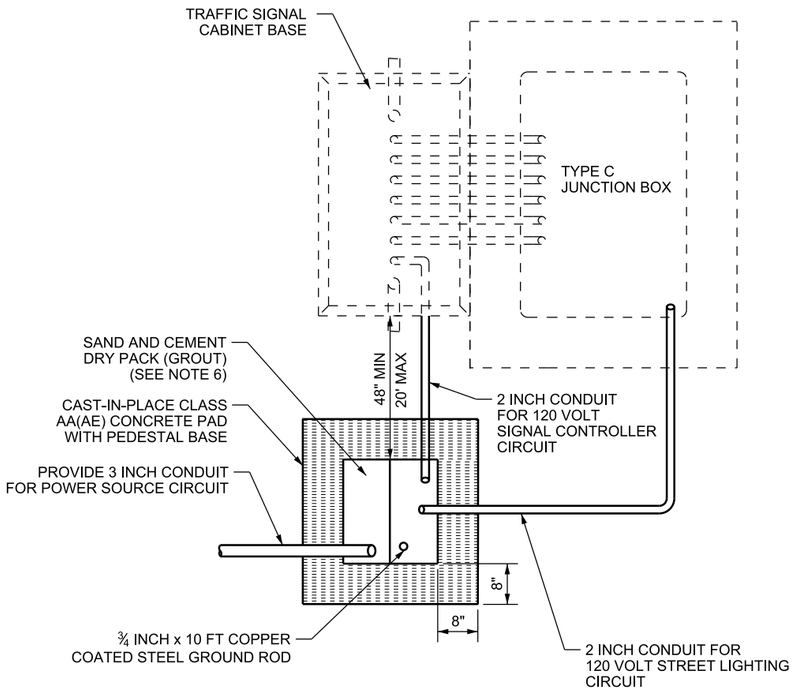

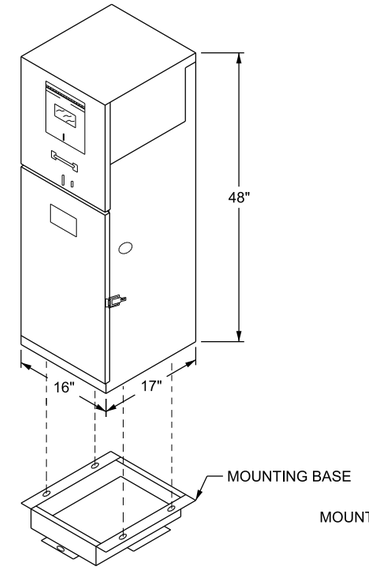

SINGLE METER UNDERGROUND SERVICE PEDESTAL

(ACTUAL DIMENSIONS MAY VARY, DIMENSIONS FOR INFORMATION ONLY)

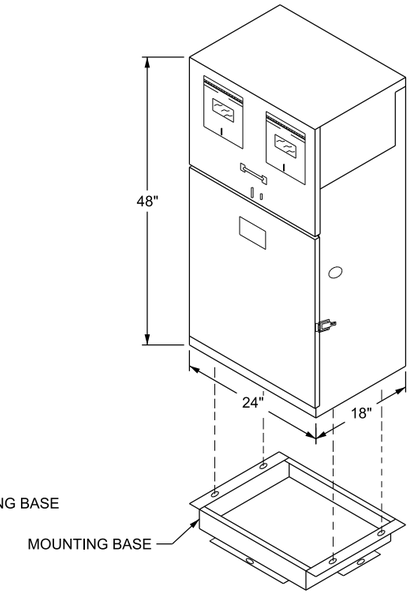

DUAL METER UNDERGROUND SERVICE PEDESTAL

(ACTUAL DIMENSIONS MAY VARY, DIMENSIONS FOR INFORMATION ONLY)

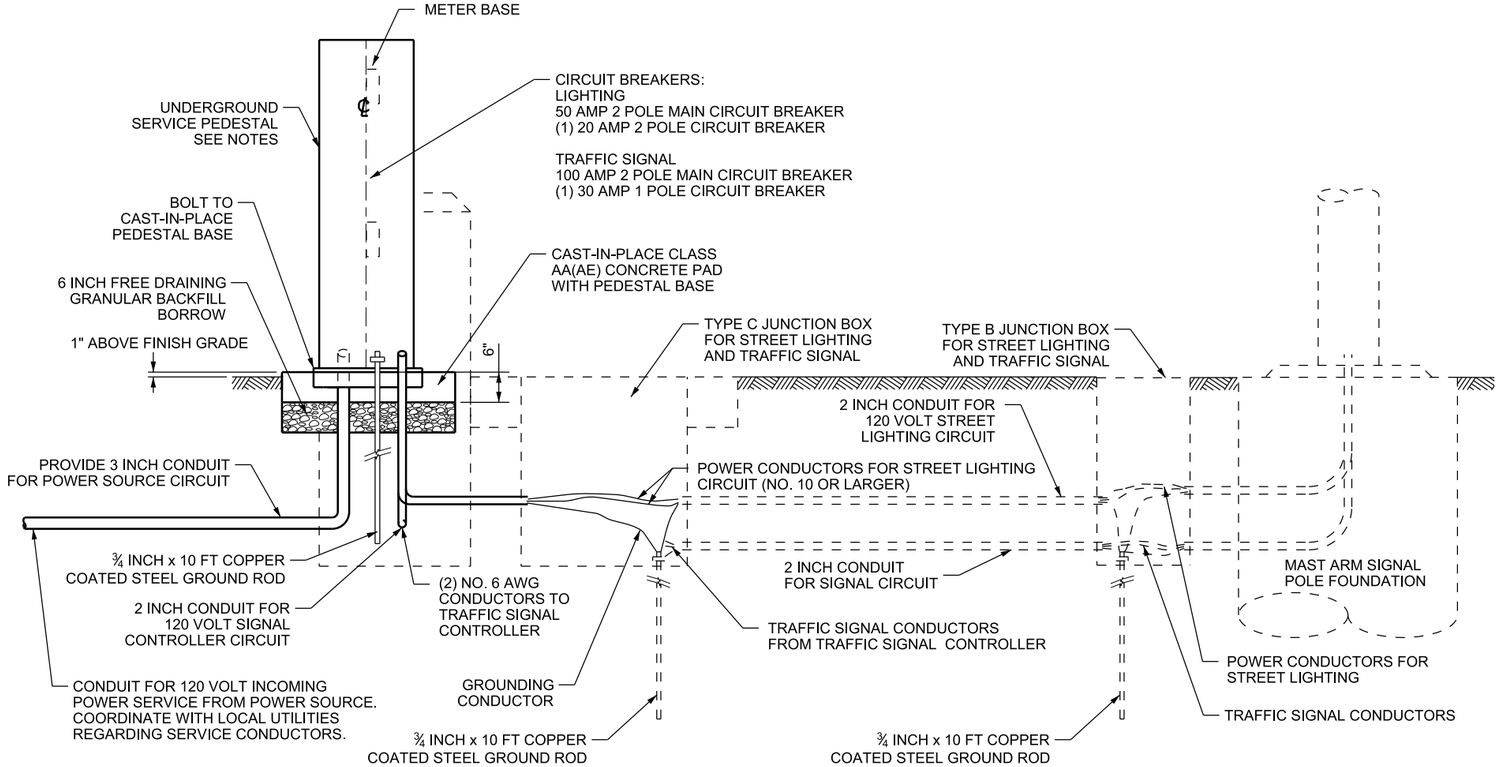

NOTES:

1. LOCATE SERVICE PEDESTAL ON EITHER SIDE OF CABINET FOUNDATION AS SPECIFIED. LOCATION MAY BE MODIFIED TO BEST SUIT FIELD CONDITIONS PER ENGINEER'S APPROVAL. MAINTAIN 48 INCH MINIMUM CLEARANCE AROUND EACH UNIT WITH DOORS OPENED TO ANY POSITION. PLACE UNDERGROUND SERVICE PEDESTAL WITHIN 20 FT OF CABINET.
2. LOCATE SERVICE PEDESTAL AND CONTROLLER SO WATER DRAINS AWAY FROM FOUNDATIONS AND JUNCTION BOXES. SITE PREPARATION, INCLUDING GRADING, MAY BE REQUIRED BEFORE PLACING EQUIPMENT.
3. INCLUDE METER SOCKET WITH TEST BLOCK (SAFETY SOCKET) REQUIRED FOR CIRCUIT BREAKERS.
4. PROVIDE UNDERGROUND SERVICE PEDESTAL (DUAL METER FOR TRAFFIC SIGNAL AND STREET LIGHTING):
   A. RATED 100 AMP AT 120 VOLTS.
   B. PROVIDE FOR SIX FULLSIZE POLES (INCLUDING MAINS) FOR BOTH CIRCUIT BREAKER INTERIORS.
   C. USE PLUG-IN CIRCUIT BREAKERS.
   D. LABEL ALL BREAKERS.
   E. USE DETACHABLE BASE FOR PRE-INSTALLATION IN CONCRETE FOUNDATION.
   F. SECURE PIANO HINGED DOORS WITH MASTER PADLOCK NO. P-848.
   G. MASTER PHOTOCELL FOR LIGHTING.
5. SEE STD DWG SL 4D FOR JUNCTION BOX DETAILS.
6. INSTALL SAND AND CEMENT DRY PACK (GROUT) WITHIN MOUNTING BASE AFTER INSTALLATION OF CONDUITS AND GROUND ROD. INSTALL ⅜ INCH WEEP HOLE IN THE SIDE OF UNDERGROUND SERVICE PEDESTAL TO ALLOW DRAINAGE FROM TOP OF GROUT.

REVISIONS			
NO.	DATE	APPR.	REMARKS

UTAH DEPARTMENT OF TRANSPORTATION
STANDARD DRAWINGS FOR ROAD AND BRIDGE CONSTRUCTION
SALT LAKE CITY, UTAH

RECOMMENDED FOR APPROVAL — JAN. 01, 2017 DATE
CHAIRMAN STANDARDS COMMITTEE APPROVED — JAN. 01, 2017 DATE
DEPUTY DIRECTOR

UNDERGROUND SERVICE PEDESTALS
STANDARD DRAWING TITLE

STD. DWG. NO.
SL 4C

DGN File:L:\Standard Drawings\Imperial\2017 Approved\1-All Drawings\SL04C.dgn
28-NOV-2016

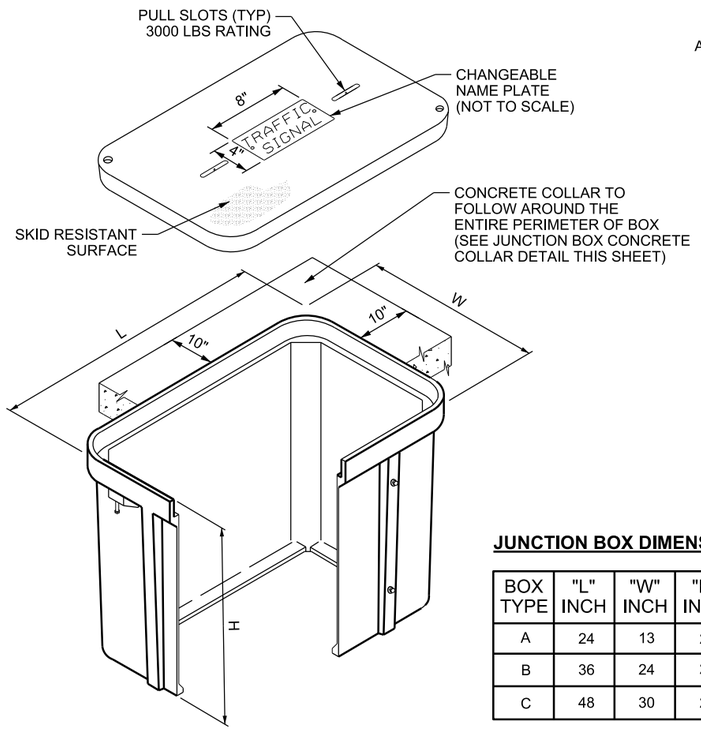

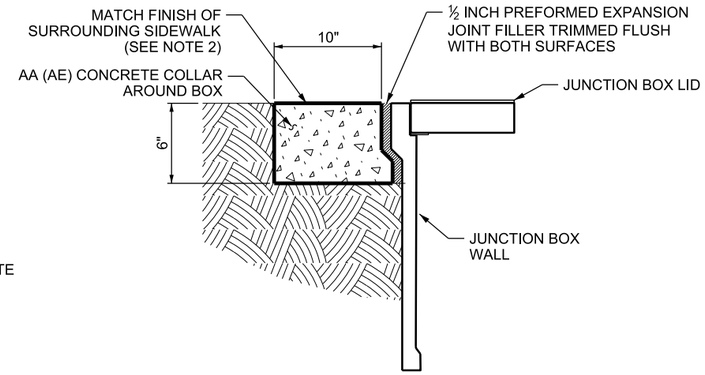

JUNCTION BOX CONCRETE COLLAR DETAIL

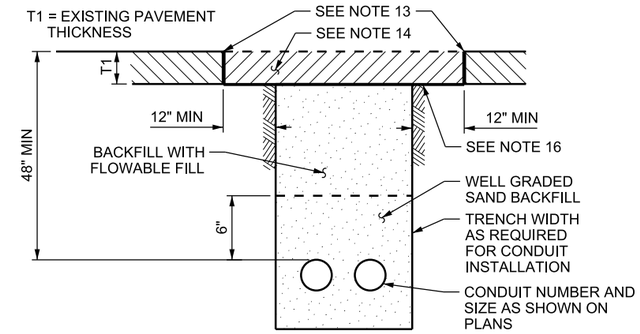

CONDUIT TRENCHED IN ASPHALT PAVEMENT DETAIL

JUNCTION BOX DIMENSIONS

BOX TYPE	"L" INCH	"W" INCH	"H" INCH	LOADING
A	24	13	24	TIER 22
B	36	24	24	TIER 22
C	48	30	24	TIER 22

MINIMUM CONDUIT DEPTH

DEPTH (INCH)	AREA
24	OUTSIDE OF PAVEMENT (TRENCHED)
48	UNDER PAVEMENT SURFACE (TRENCHED)
36	OUTSIDE 20 FT OF PAVEMENT EDGE (BORED)
48	HIGHWAY RIGHT-OF-WAY UNDER ASPHALT PAVEMENT SURFACE (BORED)
60	WITHIN 20 FT OF PAVEMENT EDGE (BORED)

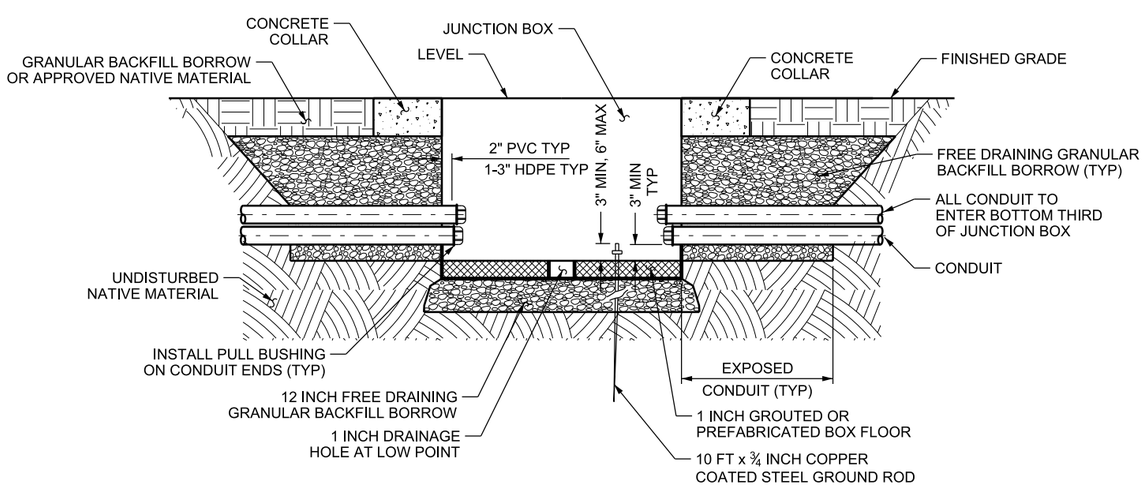

JUNCTION BOX CONDUIT PENETRATION DETAIL

NOTES:

1. DO NOT PLACE JUNCTION BOXES IN THE TRAVELED WAY OR ON ROADWAY SHOULDERS.
2. CONCRETE SIDEWALK/FLATWORK TAKES THE PLACE OF CONCRETE COLLARS ON ANY OR ALL SIDES. DO NOT PLACE SEPARATE CONCRETE COLLAR WITHIN CONCRETE SIDEWALK/FLATWORK.
3. SEAL ALL CONDUITS INSIDE JUNCTION BOX WITH 2 INCHES OF DUCT SEAL AFTER ALL WIRING IS COMPLETE.
4. INSTALL PULL BUSHING ON ALL CONDUIT ENDS BEFORE INSTALLING WIRING.
5. CONFORM TO ANSI/SCTE-77 "SPECIFICATION FOR UNDERGROUND ENCLOSURE INTEGRITY" TIER 22 LOADING FOR ALL JUNCTION BOXES. TIER 22 ID PLATE TO BE VISIBLE ON BOX.
6. EXTEND GROUND ROD A MINIMUM OF 3 INCHES AND A MAXIMUM OF 6 INCHES ABOVE BOTTOM OF JUNCTION BOX.
7. USE GROUND ROD CLAMP AND A SPLIT BOLT FOR BONDING TO GROUND ROD. ATTACH NOT MORE THAN 4 WIRES PER CLAMP.
8. DO NOT CUT GROUND RODS TO A LENGTH LESS THAN 10 FT.
9. PROVIDE CLEAR SPACE OF AT LEAST 36 INCHES FOR PERSONNEL TO PULL LID OFF BOX WITHOUT CONFLICT.
10. ATTACH NAME PLATE USING ADHESIVE ACCORDING TO THE MANUFACTURES DIRECTION AND MEETING OR EXCEEDING THE FOLLOWING SPECIFICATIONS:
    A. TENSILE STRENGTH - 1200 PSI
    B. SERVICE TEMPERATURE, CURED - SUBZERO TO +140° F
    C. CURE TIME - 24 HOURS
    INSERT TWO NON-CORRODING TAMPER RESISTANT SCREWS AFTER APPLYING ADHESIVE.
11. CHANGEABLE NAME PLATES ARE NOT REQUIRED ON POLYMER CONCRETE COVERS, CONTRACTOR MAY USE STAMPED COVERS.
12. PROVIDE TYPE C JUNCTION BOXES WITH A SPLIT LID.
13. SAW CUT PAVEMENT EDGES. APPLY A HOT-POUR RUBBERIZED ASPHALT JOINT SEALANT OR APPROVED EQUAL, APPLIED AFTER PATCH IS INSTALLED.
14. USE DEPARTMENT APPROVED MATERIAL FOR ALL BACKFILL AND PAVEMENT PATCHES.
15. INSTALL DETECTABLE PULL TAPE IN ALL EMPTY CONDUITS.
16. EVENLY APPLY TACK COAT ON FINAL BACKFILL BEFORE INSTALLING T-PATCH.
17. DO NOT TRENCH THROUGH ASPHALT WITHOUT WRITTEN APPROVAL OF THE ENGINEER.
18. USE COMPRESSION COUPLINGS WHEN CONNECTING HDPE TO PVC CONDUIT.
19. RESERVE TOPMOST CONDUITS FOR FUTURE USE.

REVISIONS

NO.	DATE	APPR.	REMARKS

UTAH DEPARTMENT OF TRANSPORTATION
STANDARD DRAWINGS FOR ROAD AND BRIDGE CONSTRUCTION
SALT LAKE CITY, UTAH

RECOMMENDED FOR APPROVAL — JAN. 01, 2017 DATE
CHAIRMAN STANDARDS COMMITTEE APPROVED — JAN. 01, 2017 DATE
DEPUTY DIRECTOR

STANDARD DRAWING TITLE
TRAFFIC SIGNAL JUNCTION BOX AND CONDUIT

STD. DWG. NO.
SL 4D

DGN File:L:\Standard_Drawings\Imperial\2017 Approved\1-All Drawings\SL04D.dgn
28-NOV-2016

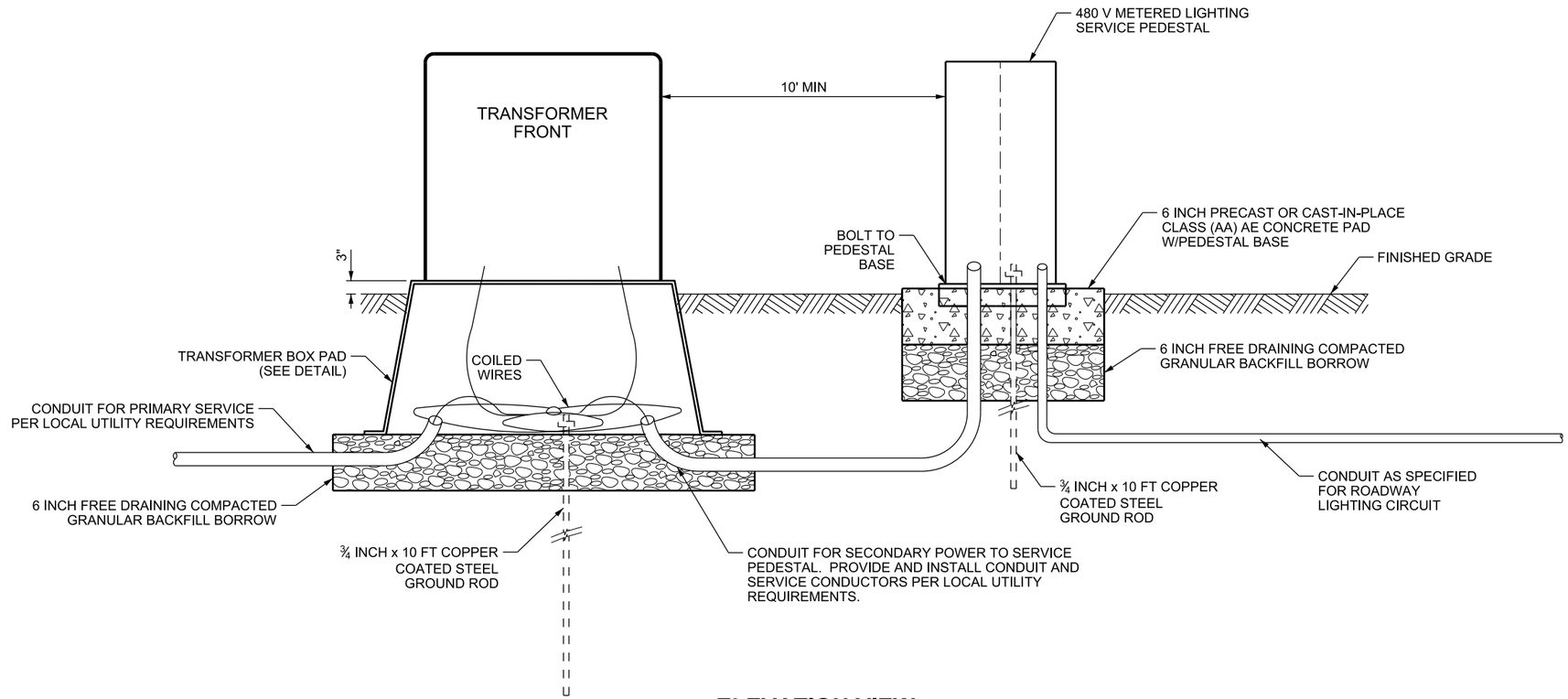

ELEVATION VIEW

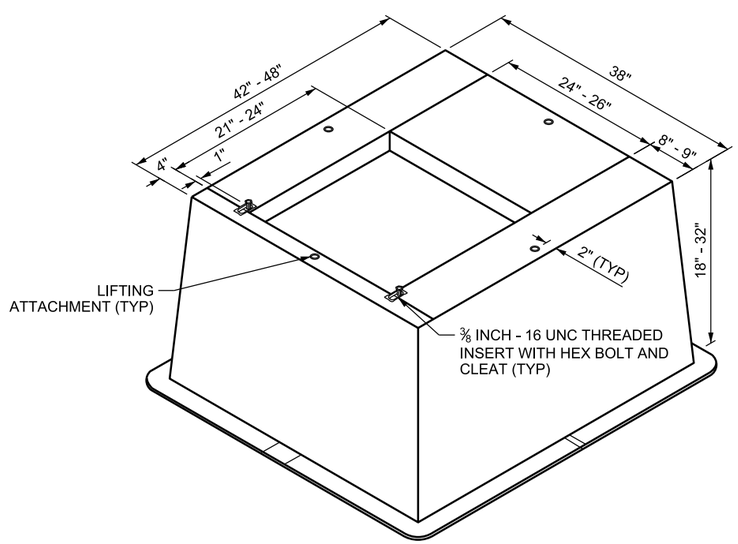

TRANSFORMER BOX PAD DETAIL

NOTES:

1. LOCAL UTILITY SERVICE POINT MUST BE SINGLE PHASE VOLTAGE WITH DISCONNECTING PROVISIONS. LOCAL UTILITY WILL INSTALL PRIMARY SERVICE CONNECTION CONDUCTORS IN CONTRACTOR FURNISHED CONDUIT.
   A. CONTACT LOCAL UTILITY TO VERIFY PRIMARY VOLTAGE AND CONNECTION TYPE.
   B. NOTIFY LOCAL UTILITY A MINIMUM 30 DAYS IN ADVANCE OF DESIRED POWER SOURCE CONNECTION.
2. PROVIDE 480 VOLT GROUND-MOUNT TRANSFORMER ACCORDING TO LOCAL UTILITY REQUIREMENTS AND CAPACITY AS SPECIFIED IN PROJECT PLANS.
3. CONFORM TO PACIFICORP SPECIFICATION ZG 411 FOR TRANSFORMER BOX PAD MATERIAL UNLESS OTHERWISE SPECIFIED ON PROJECT PLANS.
4. LOCATE SERVICE PEDESTAL ON EITHER SIDE OF TRANSFORMER AS SPECIFIED. LOCATION MAY BE MODIFIED TO BEST SUIT FIELD CONDITIONS PER THE ENGINEER'S APPROVAL. MAINTAIN 48 INCH MINIMUM CLEARANCE AROUND EACH UNIT WITH DOORS OPENED TO ANY POSITION.
5. LOCATE SERVICE PEDESTAL AND TRANSFORMER SO WATER DRAINS AWAY FROM FOUNDATIONS AND JUNCTION BOXES. SITE PREPARATION INCLUDING GRADING MAY BE REQUIRED BEFORE PLACING EQUIPMENT.

REVISIONS

NO.	DATE	APPR.	REMARKS

UTAH DEPARTMENT OF TRANSPORTATION
STANDARD DRAWINGS FOR ROAD AND BRIDGE CONSTRUCTION
SALT LAKE CITY, UTAH

RECOMMENDED FOR APPROVAL — JAN. 01, 2017 DATE
CHAIRMAN STANDARDS COMMITTEE APPROVED — JAN. 01, 2017 DATE
DEPUTY DIRECTOR

STANDARD DRAWING TITLE
SINGLE TRANSFORMER SUBSTATION

STD. DWG. NO.
SL 4E

DGN File:L:\Standard Drawings\Imperial\2017 Approved\1-All Drawings\SL04E.dgn
28-NOV-2016

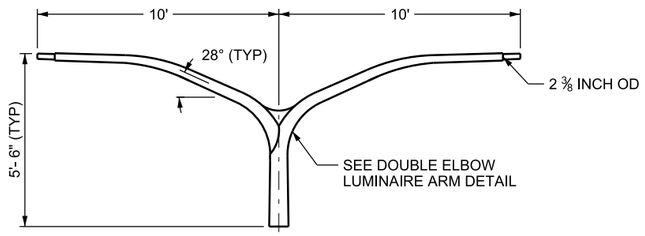

10' DUAL LUMINAIRE ARM

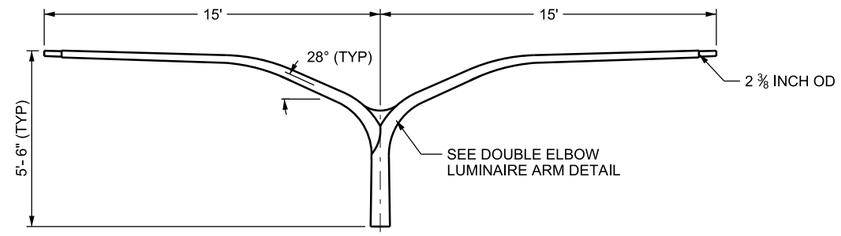

15' DUAL LUMINAIRE ARM

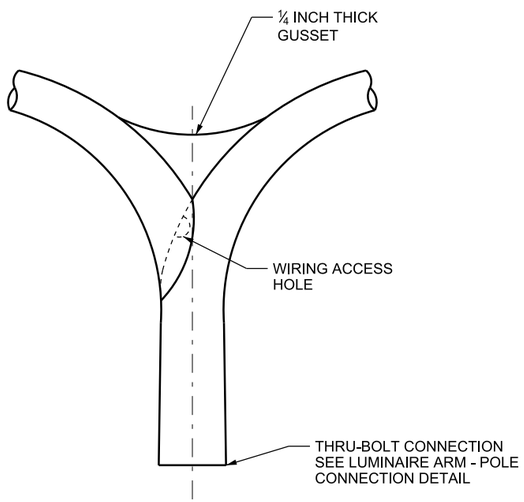

DOUBLE ELBOW LUMINAIRE ARM DETAIL

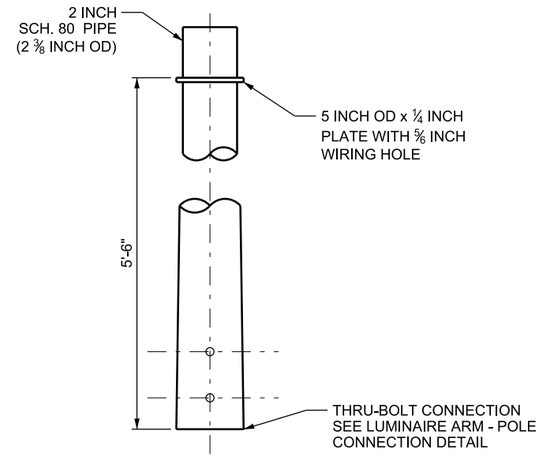

VERTICAL LUMINAIRE EXTENSION

(IN LIEU OF LUMINAIRE ARM)

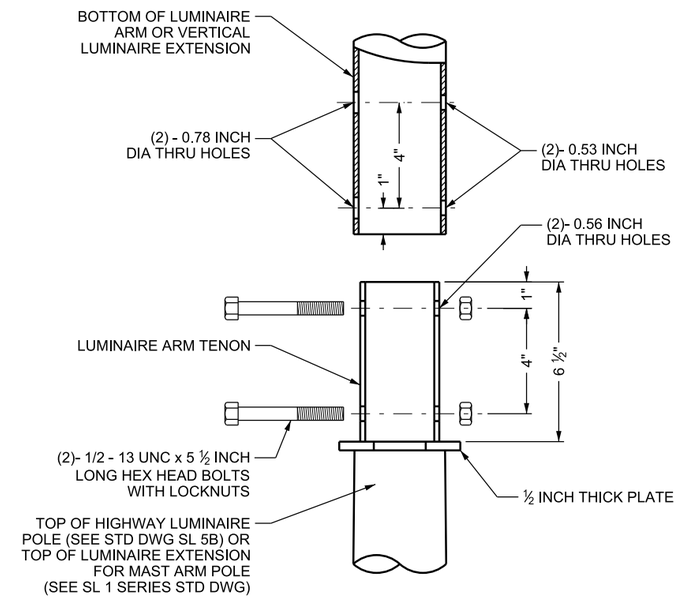

LUMINAIRE ARM - POLE CONNECTION DETAIL

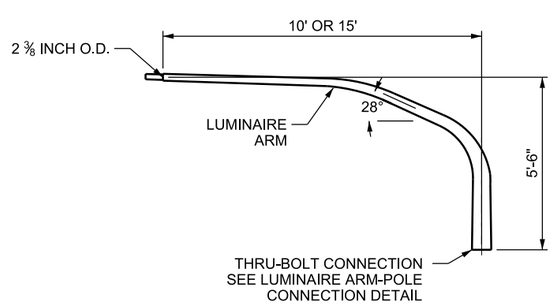

LUMINAIRE ARM DETAILS

NOTES:

1. LUMINAIRE ARMS, VERTICAL EXTENSION, AND RELATED HARDWARE ARE STATE FURNISHED MATERIALS.
2. ALL STEEL MATERIALS INCLUDING ANCHOR BOLTS ARE HOT-DIPPED GALVANIZED. AVOID DAMAGING THE GALVANIZED FINISH OF MATERIALS DURING TRANSPORT AND PLACEMENT. DELIVER THE STEEL TO THE POWDER COATING FACILITY THEN TO THE PROJECT SITE IF STEEL MATERIALS ARE TO BE POWDER COATED.

DESIGN-ONLY NOTES:

A. USE EITHER A TYPE A (250 WATT) OR TYPE B (400 WATT) LED. COORDINATE LED TYPE WITH REGION SIGNAL ENGINEER. LED'S ARE STATE FURNISHED MATERIALS.

B. A VERTICAL LUMINAIRE EXTENSION MAY BE USED IN LIEU OF A LUMINAIRE ARM TO AVOID OVERHEAD CONFLICTS OR AS SPECIFIED BY THE ENGINEER. A STATE FURNISHED VERTICAL LUMINAIRE ADAPTER IS REQUIRED TO INSTALL THE LED WHEN USING A VERTICAL LUMINAIRE EXTENSION.

REVISIONS

NO.	DATE	APPR.	REMARKS

UTAH DEPARTMENT OF TRANSPORTATION
STANDARD DRAWINGS FOR ROAD AND BRIDGE CONSTRUCTION
SALT LAKE CITY, UTAH

RECOMMENDED FOR APPROVAL — JAN. 01, 2017 DATE
CHAIRMAN STANDARDS COMMITTEE APPROVED — JAN. 01, 2017 DATE
DEPUTY DIRECTOR

HIGHWAY LUMINAIRE ARM AND VERTICAL EXTENSION

STANDARD DRAWING TITLE

STD. DWG. NO.
SL 5A

DGN File:L:\Standard Drawings\Imperial\2017 Approved\1-All Drawings\SL05A.dgn
28-NOV-2016

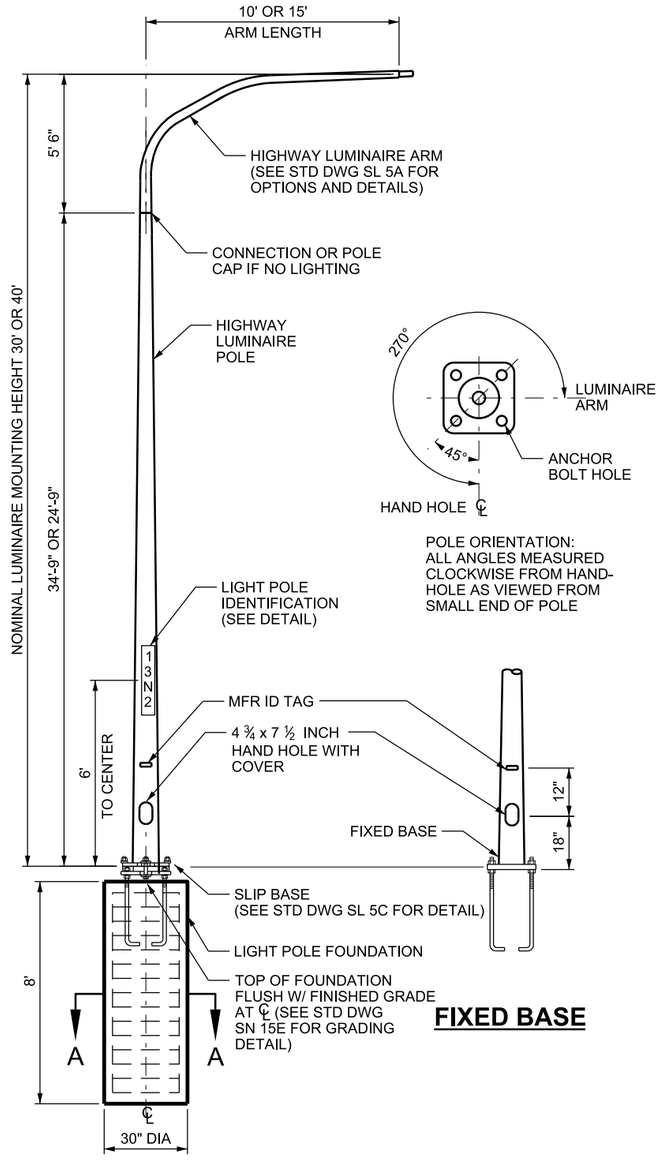

FIXED BASE

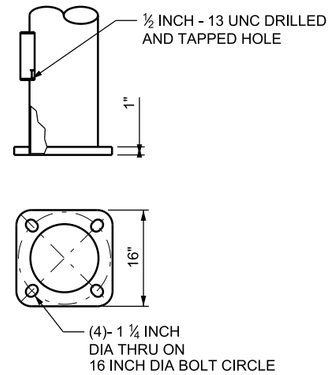

FIXED BASE PLATE DETAIL

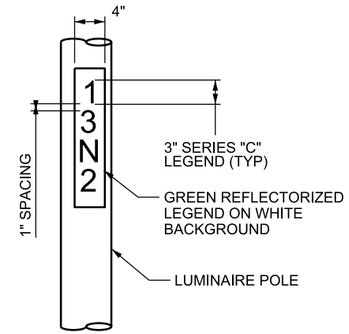

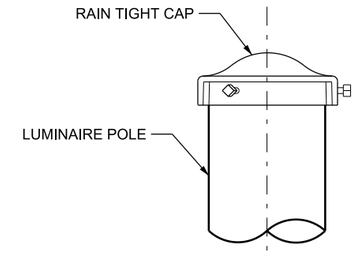

LUMINAIRE POLE CAP DETAIL

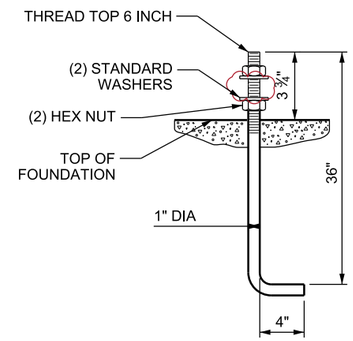

1 - INCH ANCHOR BOLT

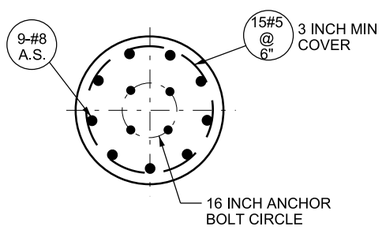

SECTION A-A

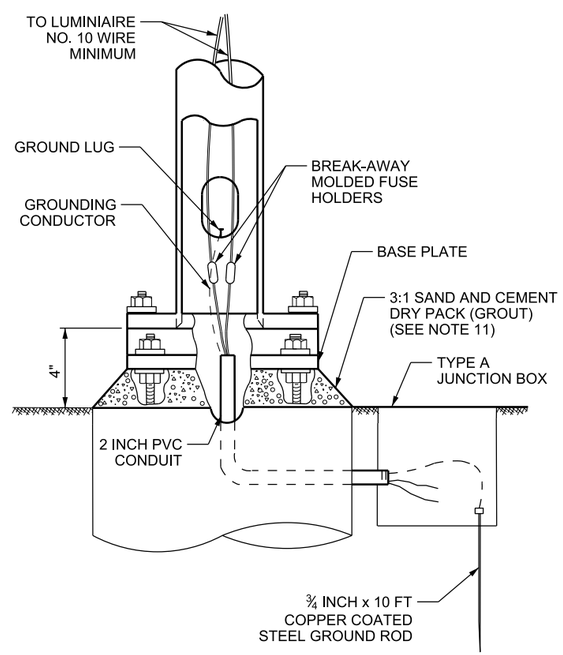

TYPICAL ELECTRICAL CONNECTIONS

NOTES:

1. LUMINAIRE POLE ASSEMBLY CONSISTS OF A POLE, ARM, BASE, INTERNAL CONDUCTORS, IDENTIFICATION, SPLICES, MOLDED CONNECTORS, FUSE HOLDERS, ANCHOR BOLTS, HARDWARE AND SLIP BASE OR FIXED BASE.
2. LUMINAIRE POLE WITH BASE, LED HEADS, LUMINAIRE ARM OR VERTICAL ATTACHMENT, ANCHOR BOLTS, AND RELATED HARDWARE ARE STATE FURNISHED ITEMS.
3. ALL STEEL MATERIALS INCLUDING ANCHOR BOLTS ARE HOT-DIPPED GALVANIZED, AVOID DAMAGING THE GALVANIZED FINISH OF MATERIALS DURING TRANSPORT AND PLACEMENT.
4. ORIENT ALL LUMINAIRE ARMS AT RIGHT ANGLES TO THE SURVEY LINE OF ROADWAY UNLESS OTHERWISE SPECIFIED ON PLAN SHEETS. ORIENT ALL LUMINAIRE POLES SUCH THAT A TECHNICIAN FACING THE HAND HOLE WILL FACE THE ROADWAY OR ONCOMING TRAFFIC.
5. PLUMB POLE FROM THE CENTERLINE AT BASEPLATE TO THE CENTERLINE AT CONNECTION AFTER ARM EXTENSION, LUMINAIRE, AND ALL ELECTRICAL ACCESSORIES ARE IN PLACE.
6. LOCATE LUMINAIRE POLE BEHIND SIGNS WHEN THERE IS CONFLICT.
7. INSTALL RAIN TIGHT CAP ON LUMINAIRE POLE IF NO LUMINAIRE ARM OR VERTICAL LUMINAIRE ATTACHMENT WILL BE INSTALLED.
8. USE SLIP BASE ON ALL LUMINAIRE POLES EXCEPT THOSE LOCATED ON STRUCTURES OR SPECIFIED ON PLANS. SEE STD DWG SL 5C FOR SLIP BASE DETAILS.
9. USE EPOXY COATED REBAR AND CLASS AA(AE) CONCRETE FOR ALL FOUNDATIONS.
10. CAST ALL FOUNDATIONS IN PLACE AGAINST UNDISTURBED EARTH. DO NOT WELD REINFORCING STEEL.
11. INSTALL DRY PACK GROUT AFTER LUMINAIRE POLE IS PLACED IN FINAL POSITION. GROUT MAY BE PLACED VERTICALLY FLUSH WITH THE BASE PLATE OR UP TO A 45 DEGREE ANGLE.

DESIGN-ONLY NOTES:

A. THE DEPARTMENT ASSUMES RESPONSIBILITY FOR LUMINAIRE POLE AND LIGHTING WHEN TRAFFIC SIGNAL OR PEDESTRIAN EQUIPMENT IS MOUNTED TO POLE. OBTAIN APPROVAL FROM TRAFFIC AND SAFETY SIGNAL AND LIGHTING ENGINEER FOR PLACEMENT OF THIS EQUIPMENT ON LUMINAIRE POLES.

NO.	DATE	APPR.	REMARKS

REVISIONS

UTAH DEPARTMENT OF TRANSPORTATION
STANDARD DRAWINGS FOR ROAD AND BRIDGE CONSTRUCTION
SALT LAKE CITY, UTAH

RECOMMENDED FOR APPROVAL — JAN. 01, 2017 DATE
CHAIRMAN STANDARDS COMMITTEE APPROVED — JAN. 01, 2017 DATE
DEPUTY DIRECTOR

HIGHWAY LUMINAIRE
GROUND MOUNTED POLE

STANDARD DRAWING TITLE

STD. DWG. NO.
SL 5B

DGN File: L:\Standard Drawings\Imperial\2017 Approved\1-All Drawings\SL05B.dgn
28-NOV-2016

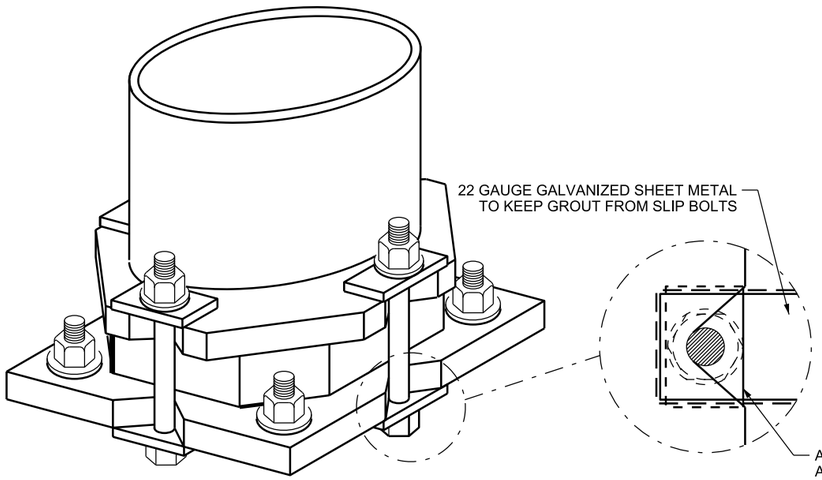

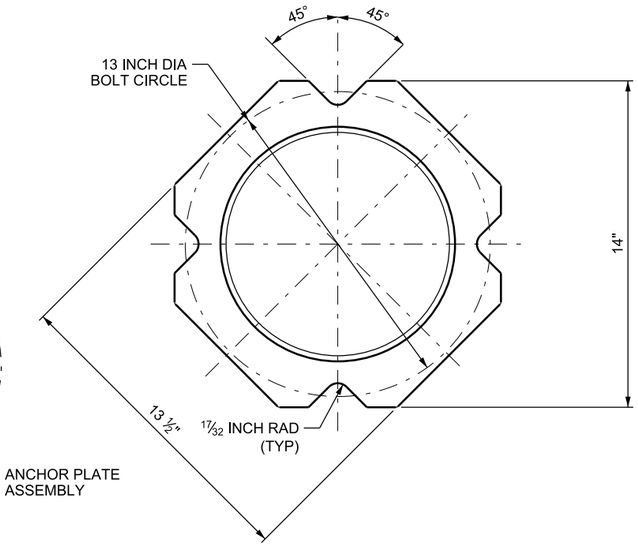

POLE BASE PLATE

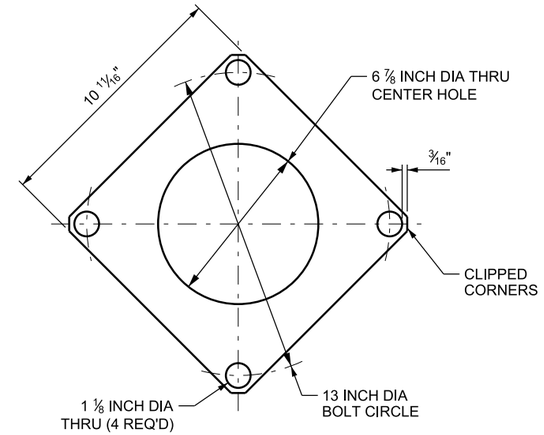

KEEPER PLATE

(28 GAUGE STAINLESS STEEL)

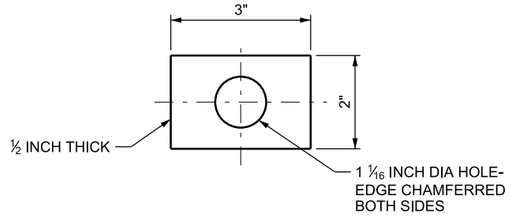

PLATE WASHER

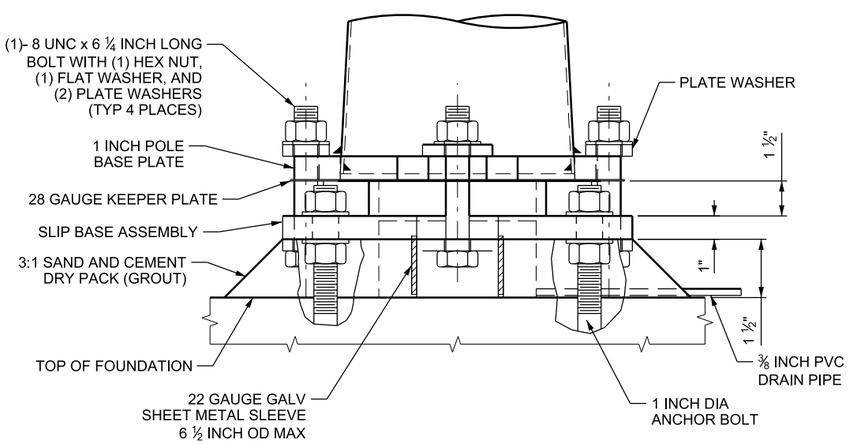

SLIP BASE DETAIL

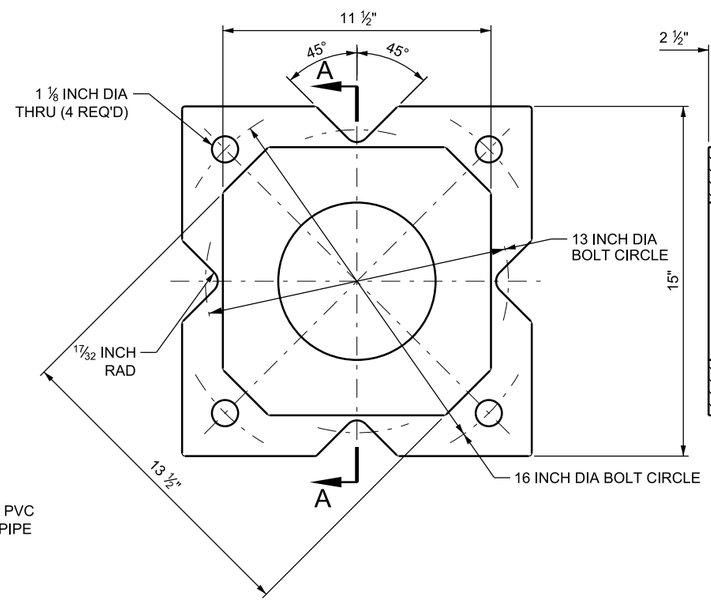

SLIP BASE ASSEMBLY

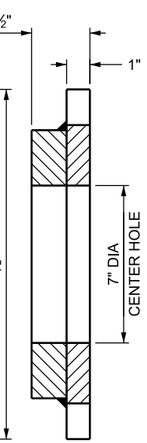

SECTION A-A

NOTES:

1. PLACE ANCHOR PLATE ASSEMBLY ON ANCHOR BOLT LEVELING NUTS AND SECURE IN PLACE.
2. ERECT LUMINAIRE POLE AND SECURE WITH 1 INCH DIA HIGH STRENGTH BOLTS. INSTALL BOLTS IN THE SLOTS SO THE BOLT SHANKS ARE IN CONTACT WITH THE LIGHT POLE PLATE AND ANCHOR PLATE ASSEMBLY.
3. ALL STEEL MATERIALS INCLUDING ANCHOR BOLT ARE HOT-DIPPED GALVANIZED. AVOID DAMAGING THE GALVANIZED FINISH OF MATERIALS DURING TRANSPORT AND PLACEMENT.
4. TORQUE ALL SLIP BOLTS TO 80 FT-LBS. RELEASE AND RE-TORQUE TO 70 FT-LBS.

REVISIONS

NO.	DATE	APPR.	REMARKS

UTAH DEPARTMENT OF TRANSPORTATION
STANDARD DRAWINGS FOR ROAD AND BRIDGE CONSTRUCTION
SALT LAKE CITY, UTAH

RECOMMENDED FOR APPROVAL — JAN. 01, 2017 DATE
CHAIRMAN STANDARDS COMMITTEE APPROVED — JAN. 01, 2017 DATE
DEPUTY DIRECTOR

HIGHWAY LUMINAIRE
SLIP BASE DETAILS

STANDARD DRAWING TITLE

STD. DWG. NO.
SL 5C

DGN File: L:\Standard Drawings\Imperial\2017 Approved\1-All Drawings\SL05C.dgn
28-NOV-2016

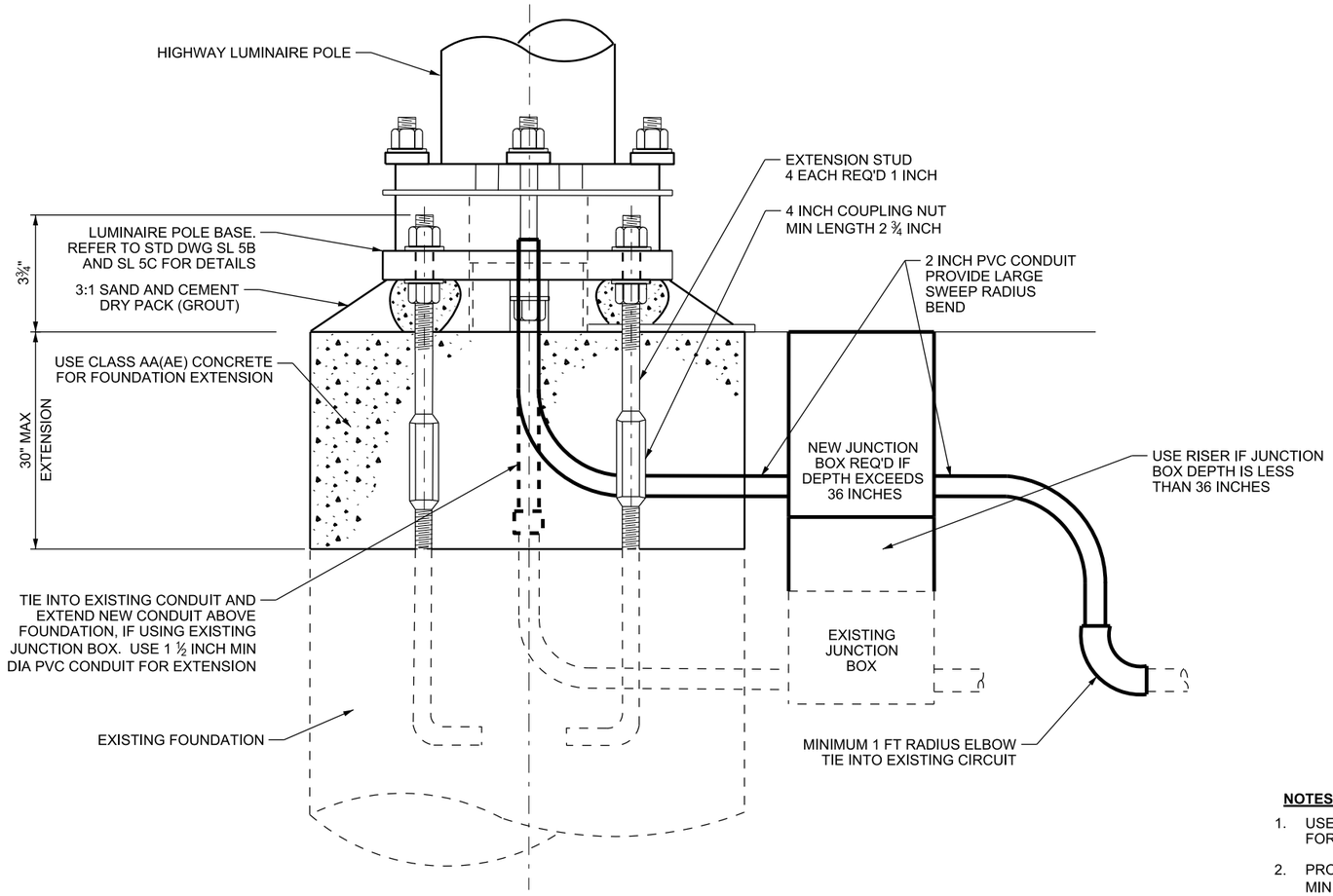

FOUNDATION EXTENSION DETAIL

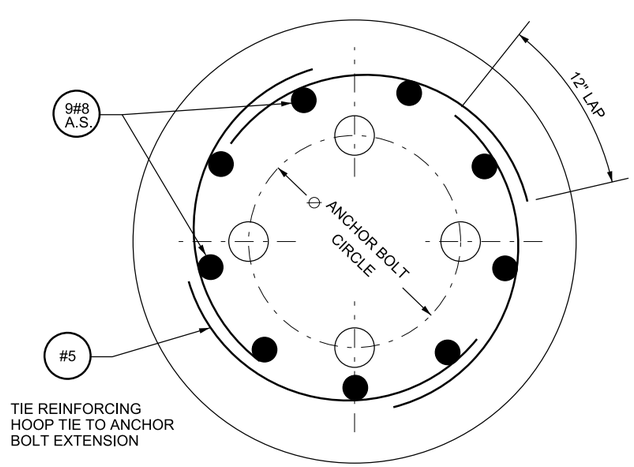

REINFORCEMENT DETAIL

SPACING GUIDE FOR REINFORCING STEEL HOOP TIE	
RISE IN FOUNDATION EXTENSION	NO. OF RINGS
6 INCH TO 12 INCH 12 INCH TO 30 INCH	2 3
TOP RING 3 INCH CONCRETE COVER	

NOTES:

1. USE COUPLING NUTS AND EXTENSION STUDS ON EXISTING LUMINAIRE POLE FOUNDATION FOR ANY EXTENSION HEIGHT REQUIRED.
2. PROVIDE COUPLING NUTS CONFORMING WITH ASTM A 307 SPECIFICATIONS WITH A MINIMUM LENGTH OF 2 ¾ INCH COUPLING NUTS IN ACCORDANCE WITH ASTM A 123, OR ZINC PLATED IN ACCORDANCE WITH ASTM A152.
3. USE 1 INCH DIA EXTENSION STUDS CONFORMING TO ASTM A307. GALVANIZE EXTENSION STUDS CONFORMING TO ASTM A 123 OR ZINC PLATE CONFORMING TO ASTM A 153.
4. ATTACH COUPLING NUTS TO EXISTING ANCHOR BOLTS. INSTALL EXTENSION STUDS TO PROVIDE 3 ¾ INCH PROJECTION ABOVE TOP OF NEW FOOTING. EXTEND AND PLACE CONDUIT AS SHOWN. PLACE REINFORCING STEEL AS SHOWN MEETING ASTM A 615 GRADE 60 REQUIREMENTS. DO NOT WELD REINFORCING STEEL. FORM AND CAST FOUNDATION EXTENSION WITH CLASS AA(AE) CONCRETE.
5. REINSTALL BREAKAWAY SLIP BASE PLATE BOTTOM AND SPACER PLATE ON EXTENDED ANCHOR BOLT LEVELING NUTS.
6. ERECT AND PLUMB POLE. INSTALL SLIP BOLT SHANKS IN CONTACT WITH PLATES. TORQUE SLIP BOLTS TO 80 FT-LBS. RELEASE AND RE-TORQUE TO 70 FT-LBS.
7. GROUT AFTER LUMINAIRE POLE IS SECURED IN FINAL POSITION.
8. RECONSTRUCT FOUNDATION EXTENSION TO A MAXIMUM OF 30 INCHES. USE EXISTING CONDUIT AND JUNCTION BOX. EXTEND CONDUIT AS SHOWN. ADD JUNCTION BOX RISERS TO MATCH GRADE FOR A MAXIMUM JUNCTION BOX DEPTH OF 36 INCHES. INSTALL NEW JUNCTION BOX AND CONDUIT SYSTEM AS SHOWN IF GREATER THAN 36 INCHES IN DEPTH.
9. ADJUST PULL BOXES (NOT LOCATED AT LUMINAIRE POLE) TO MATCH GRADE BY ADDING RISERS FOR A MAXIMUM JUNCTION BOX DEPTH OF 36 INCHES. INSTALL NEW JUNCTION BOX AND CONDUIT SYSTEM AS SHOWN IF GREATER THAN 36 INCHES IN DEPTH.
10. PROVIDE NEW CONDUIT LENGTH AND CONFIGURATION NECESSARY TO COUPLE THE EXISTING CONDUIT THROUGH FOUNDATION EXTENSION.
11. REMOVE ABANDONED JUNCTION BOXES, FILL HOLE WITH LOCAL MATERIAL, AND COMPACT TO MATCH ADJACENT GRADE.

REVISIONS

NO.	DATE	APPR.	REMARKS

UTAH DEPARTMENT OF TRANSPORTATION
STANDARD DRAWINGS FOR ROAD AND BRIDGE CONSTRUCTION
SALT LAKE CITY, UTAH

RECOMMENDED FOR APPROVAL — JAN. 01, 2017 DATE
CHAIRMAN STANDARDS COMMITTEE APPROVED — JAN. 01, 2017 DATE
DEPUTY DIRECTOR

HIGHWAY LUMINAIRE POLE FOUNDATION EXTENSION
STANDARD DRAWING TITLE

STD. DWG. NO.
SL 5D

DGN File: L:\Standard Drawings\Imperial\2017 Approved\1-All Drawings\SL05D.dgn
28-NOV-2016

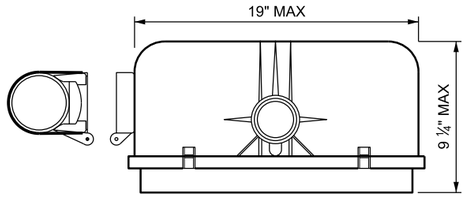

TOP VIEW

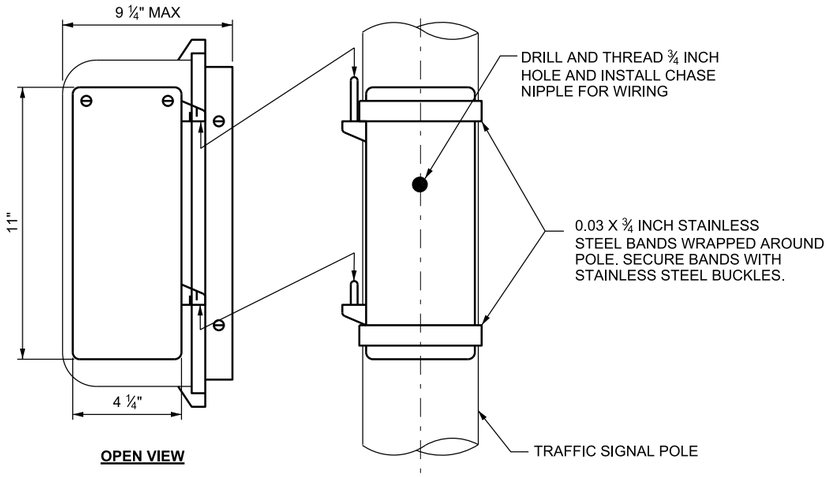

OPEN VIEW

TYPICAL MOUNTING OF PEDESTRIAN SIGNAL AND PUSH BUTTON ON A SIGNAL POLE

CLAMSHELL MOUNTING HARDWARE

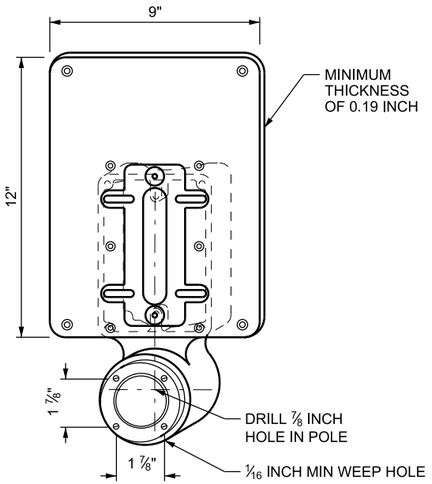

OPTION 1

FRAME TO ACCOMMODATE 5 X 7 INCH SIGN WITH ADAPTOR PLATE FOR 9 X 12 INCH SIGN

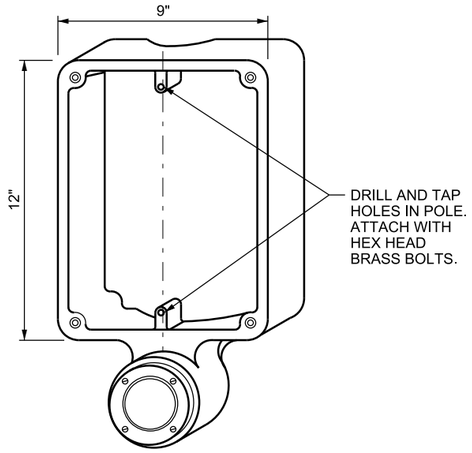

OPTION 2

FRAME TO ACCOMMODATE 9 X 12 INCH SIGN

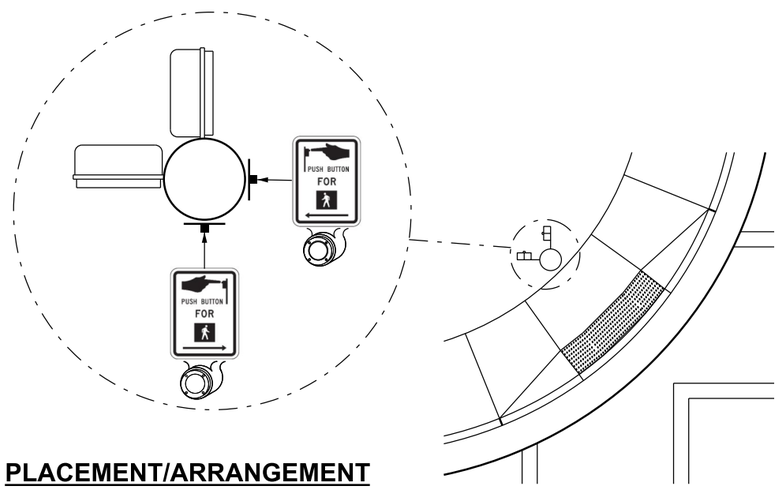

PLACEMENT/ARRANGEMENT DETAIL

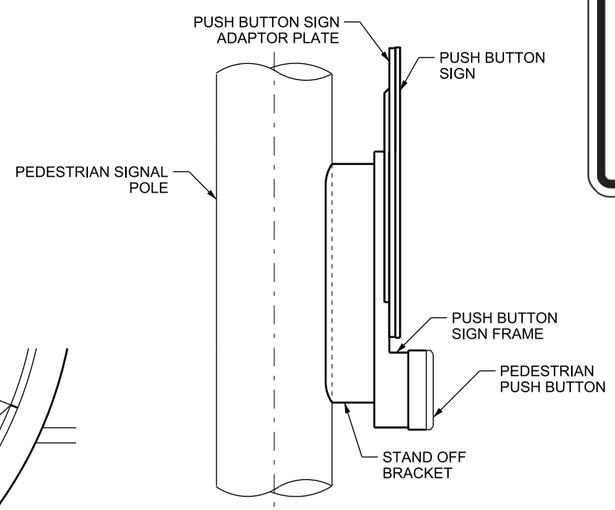

PUSH BUTTON FRAME STAND OFF BRACKET

(OPTION 1 SHOWN)
(SEE NOTE 4)

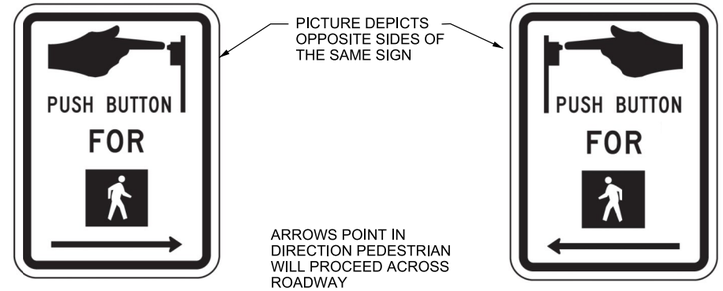

DOUBLE-SIDED R10-3 PUSH BUTTON SIGN

NOTES:

1. MOUNT PEDESTRIAN SIGNALS 9 FT - 3 INCH ± 6 INCHES FROM TURNING SPACE TO BOTTOM OF HOUSING.
2. MOUNT PUSH BUTTONS 42 ± 2 INCHES ABOVE TURNING SPACE.
3. LOCATE PUSH BUTTON WITHIN 10 FT OF THE ROADWAY SIDE EDGE OF THE DETECTABLE WARNING SURFACE, MEASURED FROM THE CENTER OF THE CURB CUT.
4. PROVIDE FRAME STANDOFF BRACKETS WHEN MOUNTING TWO SIGN FRAMES TO ONE PEDESTRIAN POLE. POINT ARROW ON SIGN R10-3 IN DIRECTION PEDESTRIAN WILL PROCEED ACROSS ROADWAY.
5. MOUNT PUSH BUTTON 10 INCHES OR LESS FROM EDGE OF THE TURNING SPACE SO THAT PUSH BUTTON IS ACCESSIBLE.
6. INSTALL PUSH BUTTONS AND PEDESTRIAN HEADS PARALLEL TO CROSSWALKS.
7. INSTALL PUSH BUTTONS AND PEDESTRIAN HEADS ON LARGE SIGNAL POLES WHENEVER POSSIBLE.

NO.	DATE	APPR.	REMARKS

REVISIONS

UTAH DEPARTMENT OF TRANSPORTATION
STANDARD DRAWINGS FOR ROAD AND BRIDGE CONSTRUCTION
SALT LAKE CITY, UTAH

RECOMMENDED FOR APPROVAL — JAN. 01, 2017 DATE
CHAIRMAN STANDARDS COMMITTEE APPROVED — JAN. 01, 2017 DATE
DEPUTY DIRECTOR

PEDESTRIAN SIGNAL ASSEMBLY
STANDARD DRAWING TITLE

STD. DWG. NO.
SL 6A

DGN File: L:\Standard Drawings\Imperial\2017 Approved\1-All Drawings\SL06A.dgn
28-NOV-2016

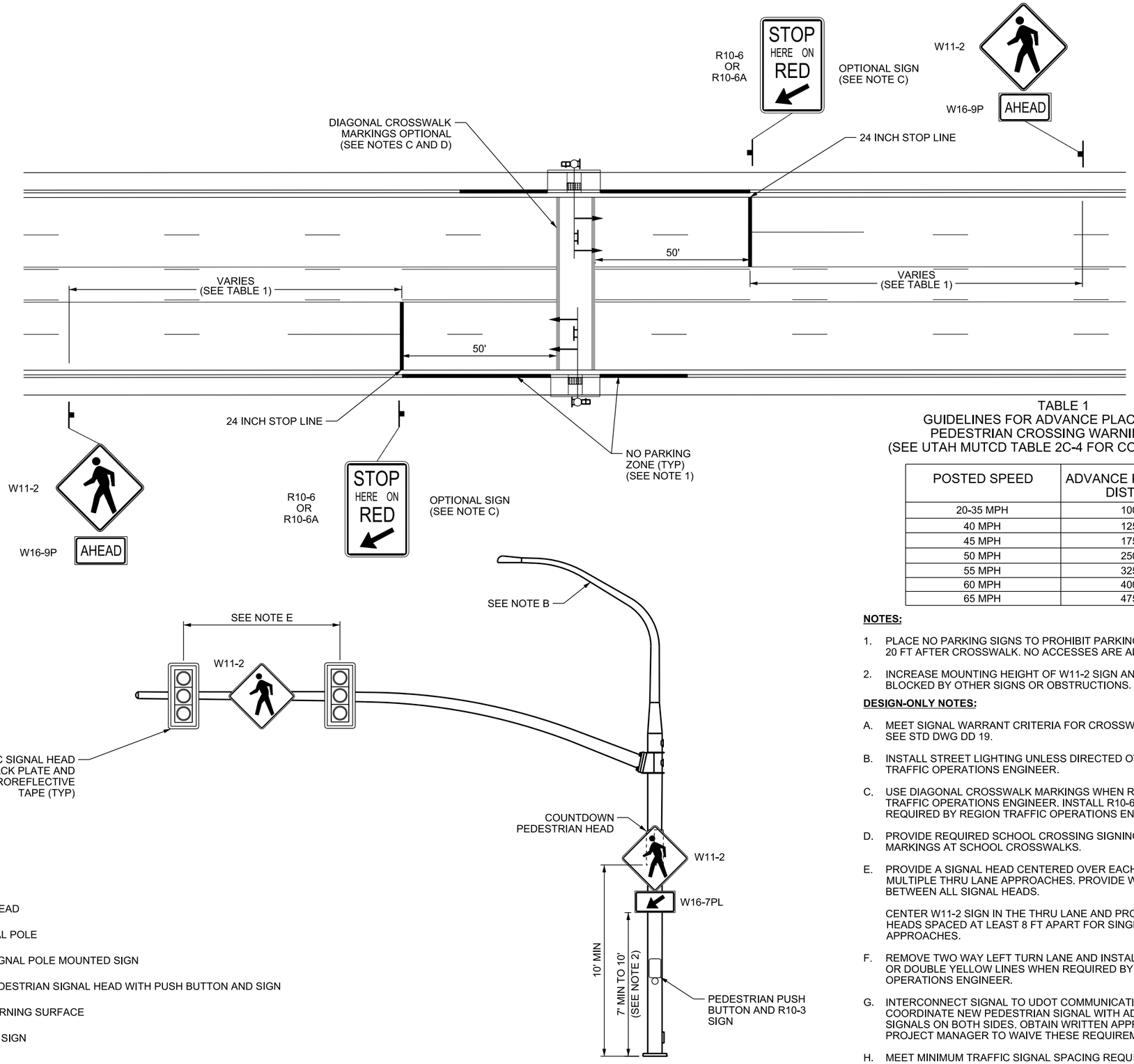

LEGEND

- TYPE 1 SIGNAL HEAD
- MAST ARM SIGNAL POLE
- MAST ARM OR SIGNAL POLE MOUNTED SIGN
- COUNTDOWN PEDESTRIAN SIGNAL HEAD WITH PUSH BUTTON AND SIGN
- DETECTABLE WARNING SURFACE
- GROUND MOUNT SIGN

TABLE 1
GUIDELINES FOR ADVANCE PLACEMENT OF
PEDESTRIAN CROSSING WARNING SIGNS
(SEE UTAH MUTCD TABLE 2C-4 FOR COMPLETE TABLE)

POSTED SPEED	ADVANCE PLACEMENT DISTANCE
20-35 MPH	100 FT
40 MPH	125 FT
45 MPH	175 FT
50 MPH	250 FT
55 MPH	325 FT
60 MPH	400 FT
65 MPH	475 FT

NOTES:

1. PLACE NO PARKING SIGNS TO PROHIBIT PARKING 50 FT BEFORE AND 20 FT AFTER CROSSWALK. NO ACCESSES ARE ALLOWED IN THIS AREA.
2. INCREASE MOUNTING HEIGHT OF W11-2 SIGN AND W16-7PL PLAQUE IF BLOCKED BY OTHER SIGNS OR OBSTRUCTIONS.

DESIGN-ONLY NOTES:

A. MEET SIGNAL WARRANT CRITERIA FOR CROSSWALK INSTALLATION. SEE STD DWG DD 19.

B. INSTALL STREET LIGHTING UNLESS DIRECTED OTHERWISE BY REGION TRAFFIC OPERATIONS ENGINEER.

C. USE DIAGONAL CROSSWALK MARKINGS WHEN REQUIRED BY REGION TRAFFIC OPERATIONS ENGINEER. INSTALL R10-6 OR R10-6A SIGNS WHEN REQUIRED BY REGION TRAFFIC OPERATIONS ENGINEER.

D. PROVIDE REQUIRED SCHOOL CROSSING SIGNING AND PAVEMENT MARKINGS AT SCHOOL CROSSWALKS.

E. PROVIDE A SIGNAL HEAD CENTERED OVER EACH THRU LANE FOR MULTIPLE THRU LANE APPROACHES. PROVIDE W11-2 SIGN CENTERED BETWEEN ALL SIGNAL HEADS.

CENTER W11-2 SIGN IN THE THRU LANE AND PROVIDE TWO SIGNAL HEADS SPACED AT LEAST 8 FT APART FOR SINGLE THRU LANE APPROACHES.

F. REMOVE TWO WAY LEFT TURN LANE AND INSTALL A RAISED MEDIAN OR DOUBLE YELLOW LINES WHEN REQUIRED BY REGION TRAFFIC OPERATIONS ENGINEER.

G. INTERCONNECT SIGNAL TO UDOT COMMUNICATIONS NETWORK. COORDINATE NEW PEDESTRIAN SIGNAL WITH ADJACENT TRAFFIC SIGNALS ON BOTH SIDES. OBTAIN WRITTEN APPROVAL FROM ATMS PROJECT MANAGER TO WAIVE THESE REQUIREMENTS.

H. MEET MINIMUM TRAFFIC SIGNAL SPACING REQUIREMENTS.

I. FOLLOW SIGNALIZED INTERSECTION DESIGN GUIDELINES.

REVISIONS

NO.	DATE	APPR.	REMARKS

UTAH DEPARTMENT OF TRANSPORTATION
STANDARD DRAWINGS FOR ROAD AND BRIDGE CONSTRUCTION
SALT LAKE CITY, UTAH

RECOMMENDED FOR APPROVAL — JAN. 01, 2017 DATE
CHAIRMAN STANDARDS COMMITTEE APPROVED — JAN. 01, 2017 DATE
DEPUTY DIRECTOR

PEDESTRIAN SIGNAL CROSSWALK
STANDARD DRAWING TITLE

STD. DWG. NO.
SL 6B

28-NOV-2016 DGN File:L:\Standard_Drawings\Imperial\2017 Approved\1-All Drawings\SL06B.dgn

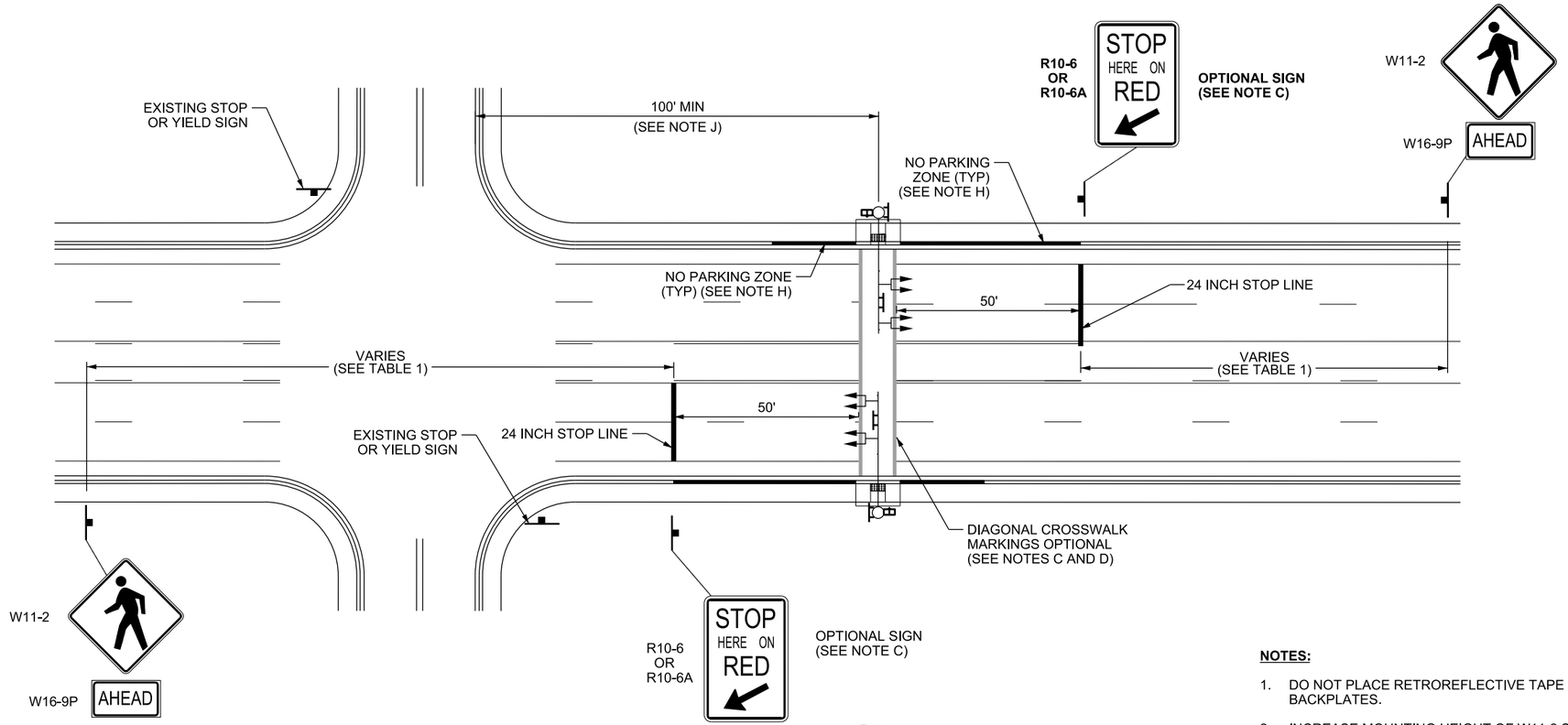

TABLE 1
GUIDELINES FOR ADVANCE PLACEMENT OF
PEDESTRIAN CROSSING WARNING SIGNS
(SEE UTAH MUTCD TABLE 2C-4 FOR COMPLETE TABLE)

POSTED SPEED	MINIMUM ADVANCE PLACEMENT DISTANCE
20-35 MPH	100 FT
40 MPH	125 FT
45 MPH	175 FT
50 MPH	250 FT
55 MPH	325 FT
60 MPH	400 FT
65 MPH	475 FT

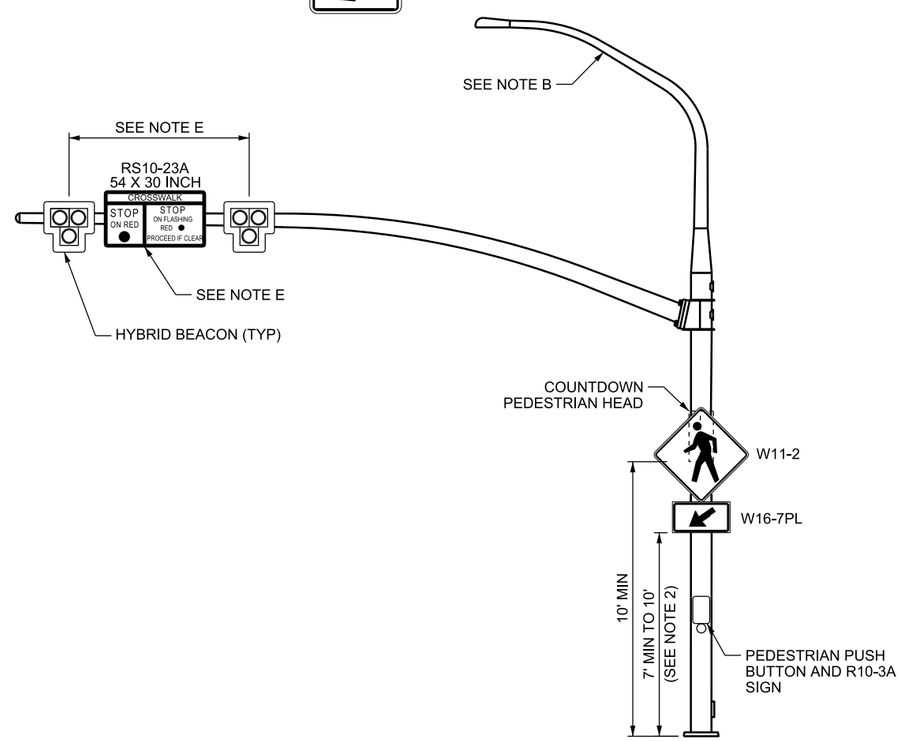

LEGEND

- 12" DIAMETER HYBRID BEACON
- MAST ARM SIGNAL POLE
- MAST ARM OR SIGNAL POLE MOUNTED SIGN
- COUNTDOWN PEDESTRIAN SIGNAL HEAD WITH PUSH BUTTON AND SIGN
- DETECTABLE WARNING SURFACE
- GROUND MOUNT SIGN

NOTES:

1. DO NOT PLACE RETROREFLECTIVE TAPE ON HYBRID BEACON BACKPLATES.
2. INCREASE MOUNTING HEIGHT OF W11-2 SIGN AND W16-7PL PLAQUE IF BLOCKED BY OTHER SIGNS OR OBSTRUCTIONS.

DESIGN-ONLY NOTES:

A. MEET PEDESTRIAN HYBRID BEACON SIGNAL GUIDELINES. SEE STD DWG DD 19.

B. INSTALL STREET LIGHTING UNLESS DIRECTED OTHERWISE BY REGION TRAFFIC OPERATIONS ENGINEER.

C. USE DIAGONAL CROSSWALK MARKINGS WHEN REQUIRED BY REGION TRAFFIC OPERATIONS ENGINEER. INSTALL R10-6 OR R10-6A SIGNS WHEN REQUIRED BY REGION TRAFFIC OPERATIONS ENGINEER.

D. PROVIDE REQUIRED SCHOOL CROSSING SIGNING AND PAVEMENT MARKINGS AT SCHOOL CROSSWALKS.

E. CENTER HYBRID BEACON IN EACH THRU LANE. PROVIDE RS10-23A SIGN CENTERED BETWEEN ALL HYBRID BEACONS. FOR SINGLE THRU LANE APPROACHES, CENTER RS10-23A SIGN IN THE LANE AND SPACE HYBRID BEACONS AT LEAST 10 FT APART.

F. REMOVE TWO WAY LEFT TURN LANE AND INSTALL A RAISED MEDIAN OR DOUBLE YELLOW LINES WHEN REQUIRED BY REGION TRAFFIC OPERATIONS ENGINEER.

G. INTERCONNECT SIGNAL TO UDOT COMMUNICATIONS NETWORK. COORDINATE NEW PEDESTRIAN HYBRID BEACON WITH ADJACENT TRAFFIC SIGNALS ON BOTH SIDES. OBTAIN WRITTEN APPROVAL FROM ATMS PROJECT MANAGER TO WAIVE THESE REQUIREMENTS.

H. PLACE NO PARKING SIGNS TO PROHIBIT PARKING 50 FT BEFORE AND 20 FT AFTER CROSSWALK. NO ACCESSES ARE ALLOWED IN THIS AREA.

I. MEET MINIMUM TRAFFIC SIGNAL SPACING REQUIREMENTS.

J. INSTALL THE PEDESTRIAN HYBRID BEACON AT LEAST 100 FT FROM SIDE STREETS AND DRIVEWAYS THAT ARE CONTROLLED BY STOP OR YIELD SIGNS. DO NOT INSTALL IN LEFT TURN LANE, STORAGE, GAP, OR DECELERATION AREAS. DO NOT INSTALL IN POTENTIAL FUTURE LEFT TURN LANE IF CURRENTLY MARKED AS A TWO WAY LEFT TURN LANE.

K. PLACE HYBRID BEACON ASSEMBLIES ON A SINGLE OR TWO SEPARATE MAST ARMS.

REVISIONS

NO.	DATE	APPR.	REMARKS

UTAH DEPARTMENT OF TRANSPORTATION
STANDARD DRAWINGS FOR ROAD AND BRIDGE CONSTRUCTION
SALT LAKE CITY, UTAH

RECOMMENDED FOR APPROVAL — JAN. 01, 2017 DATE
CHAIRMAN STANDARDS COMMITTEE APPROVED — JAN. 01, 2017 DATE
DEPUTY DIRECTOR

PEDESTRIAN HYBRID BEACON CROSSWALK (HAWK)
STANDARD DRAWING TITLE

STD. DWG. NO.
SL 6C

DGN File:L:\Standard_Drawings\Imperial\2017 Approved\1-All Drawings\SL06C.dgn
28-NOV-2016

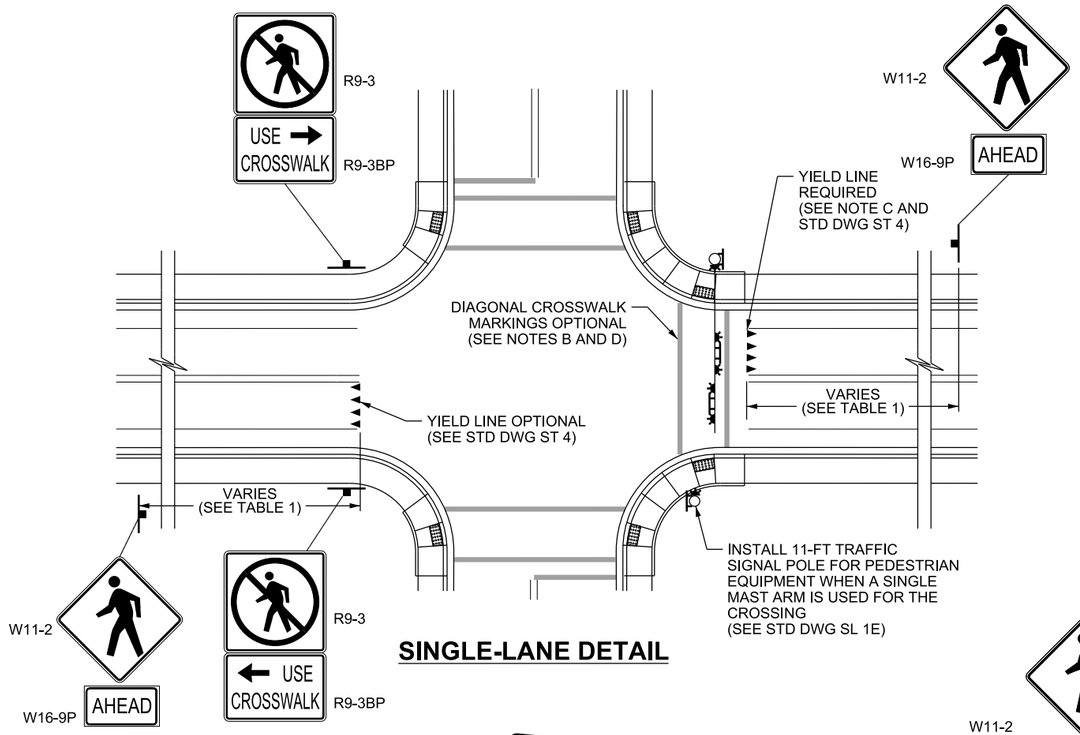

SINGLE-LANE DETAIL

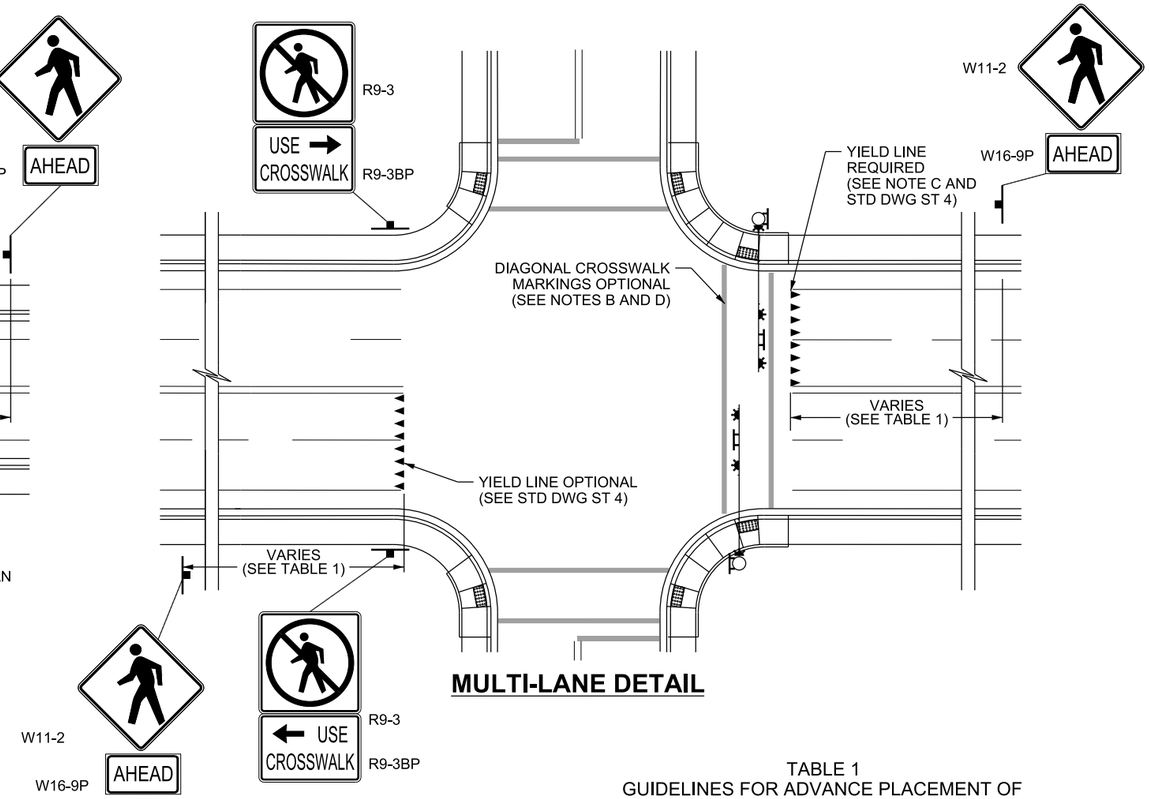

MULTI-LANE DETAIL

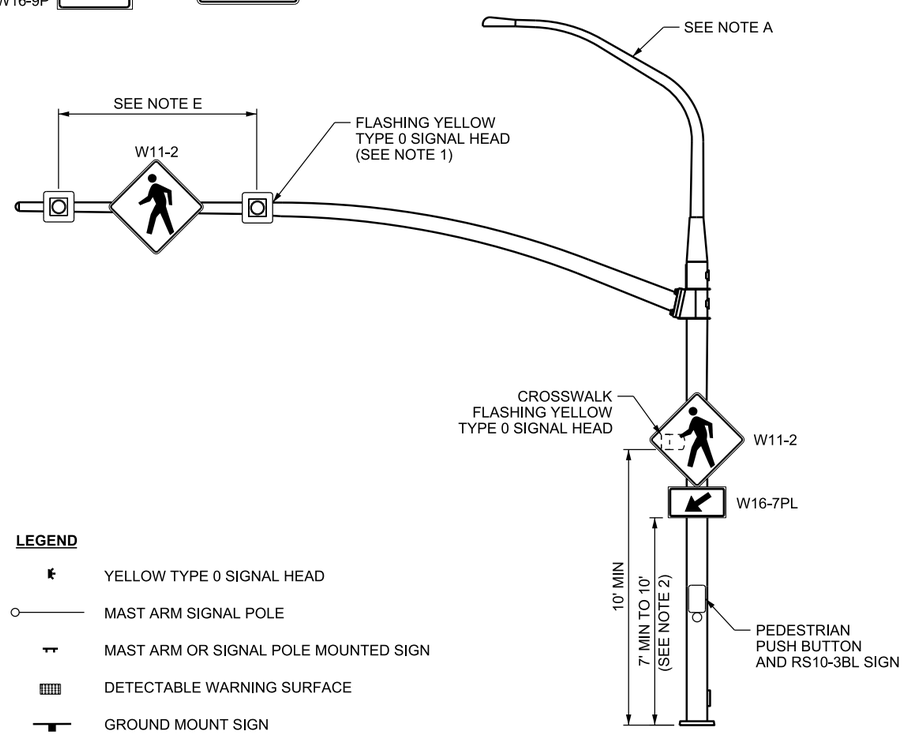

OVERHEAD DETAIL

LEGEND

- YELLOW TYPE 0 SIGNAL HEAD
- MAST ARM SIGNAL POLE
- MAST ARM OR SIGNAL POLE MOUNTED SIGN
- DETECTABLE WARNING SURFACE
- GROUND MOUNT SIGN

TABLE 1
GUIDELINES FOR ADVANCE PLACEMENT OF
PEDESTRIAN CROSSING WARNING SIGNS
(SEE UTAH MUTCD TABLE 2C-4 FOR COMPLETE TABLE)

POSTED SPEED	ADVANCE PLACEMENT DISTANCE
20-35 MPH	100 FT
40 MPH	125 FT
45 MPH	175 FT

NOTES:

1. DO NOT PLACE RETROREFLECTIVE TAPE ON TYPE 0 SIGNAL HEAD BACKPLATES.
2. INCREASE MOUNTING HEIGHT OF W11-2 SIGN AND W16-7PL PLAQUE IF BLOCKED BY OTHER SIGNS OR OBSTRUCTIONS.

DESIGN-ONLY NOTES:

A. INSTALL STREET LIGHTING UNLESS DIRECTED OTHERWISE BY REGION TRAFFIC OPERATIONS ENGINEER.

B. USE DIAGONAL CROSSWALK MARKINGS WHEN REQUIRED BY REGION TRAFFIC OPERATIONS ENGINEER.

C. PLACE YIELD LINE 4 FT FROM CROSSWALK AT INTERSECTIONS ON SINGLE-LANE AND MULTI-LANE APPROACHES.

D. PROVIDE REQUIRED SCHOOL CROSSING SIGNING AND PAVEMENT MARKINGS AT SCHOOL CROSSWALKS.

E. PROVIDE A TYPE 0 SIGNAL HEAD CENTERED OVER EACH THRU LANE, FOR MULTIPLE THRU LANE APPROACHES. PROVIDE W11-2 SIGN CENTERED BETWEEN ALL TYPE 0 SIGNAL HEADS.

CENTER W11-2 SIGN IN THE THRU LANE AND PROVIDE TWO TYPE 0 SIGNAL HEADS SPACED AT LEAST 8 FT APART, FOR SINGLE THRU LANE APPROACHES.

F. DO NOT INSTALL FLASHING BEACON CROSSWALK ON ROADWAYS WITH SPEEDS GREATER THAN 45 MPH UNLESS DIRECTED BY REGION TRAFFIC OPERATIONS ENGINEER. SEE STD DWG DD 19.

G. PLACE FLASHING BEACON ASSEMBLIES ON A SINGLE OR TWO SEPARATE MAST ARMS.

H. DO NOT INSTALL FLASHING BEACON CROSSWALK IN A REDUCED SPEED SCHOOL ZONE.

REVISIONS

NO.	DATE	APPR.	REMARKS

UTAH DEPARTMENT OF TRANSPORTATION
STANDARD DRAWINGS FOR ROAD AND BRIDGE CONSTRUCTION
SALT LAKE CITY, UTAH

RECOMMENDED FOR APPROVAL — JAN. 01, 2017 DATE
CHAIRMAN STANDARDS COMMITTEE — JAN. 01, 2017 DATE
APPROVED — DEPUTY DIRECTOR

STANDARD DRAWING TITLE
OVERHEAD FLASHING BEACON AT AN INTERSECTION CROSSWALK

STD. DWG. NO.
SL 6D

DGN File: L:\Standard Drawings\Imperial\2017 Approved\1-All Drawings\SL06D.dgn
28-NOV-2016

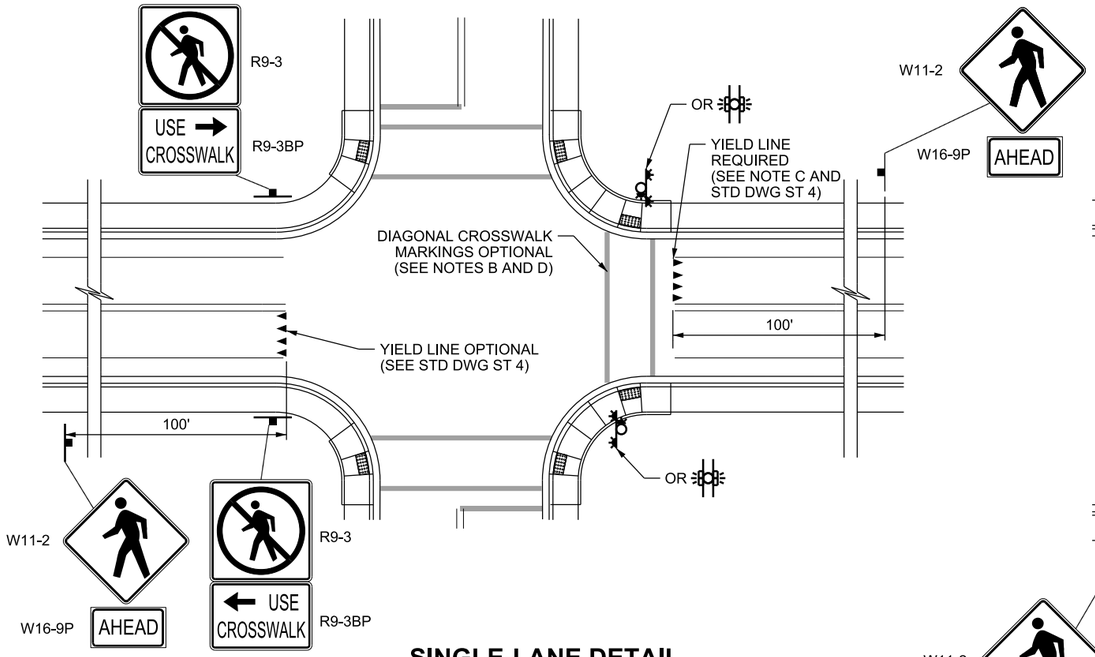

SINGLE-LANE DETAIL

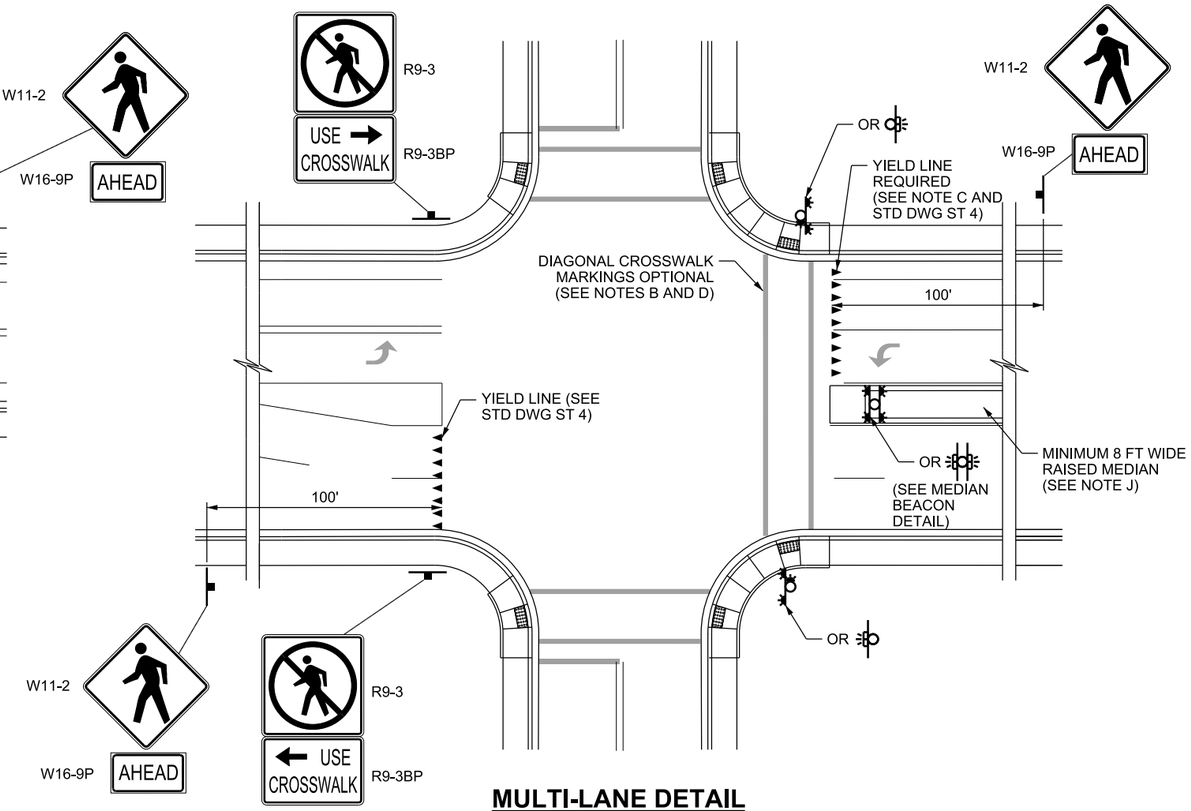

MULTI-LANE DETAIL

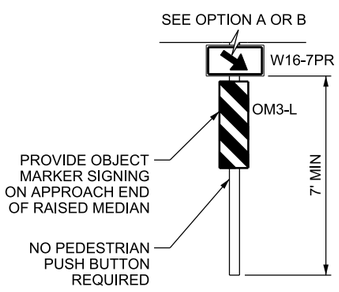

MEDIAN BEACON DETAIL

15 FT TRAFFIC SIGNAL POLE (SEE STD DWG SL 1E)

LEGEND

- YELLOW TYPE 0 SIGNAL HEAD
- DETECTABLE WARNING SURFACE
- GROUND MOUNT SIGN
- OPTION A
- OPTION A: BACK-TO-BACK (SEE NOTE K)
- OPTION B
- OPTION B: BACK-TO-BACK

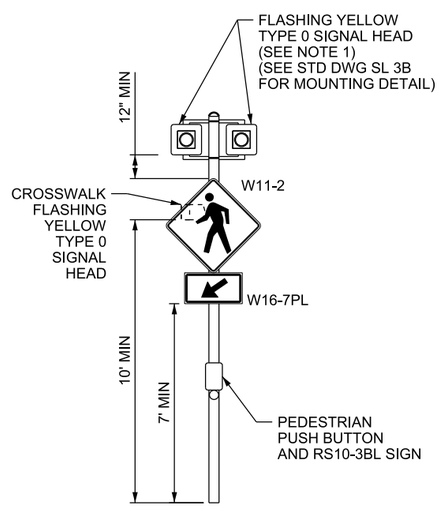

OPTION A FLASHING BEACON DETAIL

15 FT TRAFFIC SIGNAL POLE (SEE NOTES A, H, AND STD DWG SL 1E)

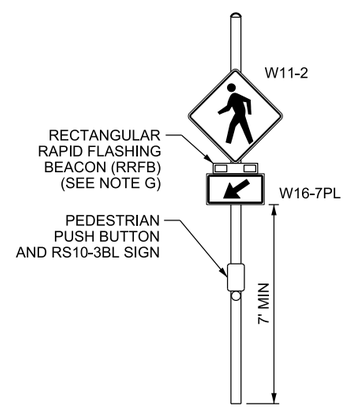

OPTION B RRFB DETAIL

15 FT TRAFFIC SIGNAL POLE (SEE NOTES A, H, I, AND STD DWG SL 1E)

NOTES:

1. DO NOT PLACE RETROREFLECTIVE TAPE ON TYPE 0 SIGNAL HEAD BACKPLATES.

DESIGN-ONLY NOTES:

A. INSTALL STREET LIGHTING UNLESS DIRECTED OTHERWISE BY REGION TRAFFIC OPERATIONS ENGINEER.

B. USE DIAGONAL CROSSWALK MARKINGS WHEN REQUIRED BY REGION TRAFFIC OPERATIONS ENGINEER.

C. PLACE YIELD LINE 4 FT FROM CROSSWALK AT INTERSECTIONS ON SINGLE-LANE AND MULTI-LANE APPROACHES.

D. PROVIDE REQUIRED SCHOOL CROSSING SIGNING AND PAVEMENT MARKINGS AT SCHOOL CROSSWALKS.

E. DO NOT USE POST-MOUNTED FLASHING BEACON CROSSWALK WHEN POSTED SPEED EXCEEDS 35 MPH UNLESS OTHERWISE DIRECTED BY REGION TRAFFIC OPERATIONS ENGINEER.

F. DO NOT INSTALL FLASHING BEACON CROSSWALK WITHIN A REDUCED SPEED SCHOOL ZONE.

G. MEET FHWA INTERIM APPROVAL REQUIREMENTS FOR RECTANGULAR RAPID FLASHING BEACON.

H. DO NOT INSTALL POST-MOUNTED FLASHING BEACONS WHERE THERE ARE THREE OR MORE THRU LANES IN ONE DIRECTION. EACH LANE, INCLUDING TURN LANES, MUST HAVE AN ADJACENT POST-MOUNTED FLASHING BEACON.

I. OPTION B, RRFB REQUIRES TWO BEACONS FOR EACH DIRECTION, ONE ON EACH SIDE.

J. RAISED MEDIAN CONFIGURATION DETERMINED BY LOCATION NEEDS. SEE GW SERIES STD DWGS. MEET LATERAL OFFSET REQUIREMENTS.

K. BACK-TO-BACK CONSISTS OF W11-2 AND W16-7PL SIGNS AND FLASHING BEACONS (TYPE 0 OR RRFB) FACING OPPOSITE DIRECTIONS MOUNTED ON THE SAME POLE.

L. DO NOT MIX POST-MOUNTED BEACON TYPES AT A CROSSWALK. USE ALL RRFB'S OR ALL FLASHING BEACONS.

REVISIONS

NO.	DATE	APPR.	REMARKS

UTAH DEPARTMENT OF TRANSPORTATION
STANDARD DRAWINGS FOR ROAD AND BRIDGE CONSTRUCTION
SALT LAKE CITY, UTAH

RECOMMENDED FOR APPROVAL — JAN. 01, 2017 DATE
CHAIRMAN STANDARDS COMMITTEE APPROVED — JAN. 01, 2017 DATE
DEPUTY DIRECTOR

STANDARD DRAWING TITLE: POST-MOUNTED FLASHING BEACON AT AN INTERSECTION CROSSWALK

STD. DWG. NO. SL 6E

DGN File: L:\Standard Drawings\Imperial\2017 Approved\1-All Drawings\SL06E.dgn
28-NOV-2016

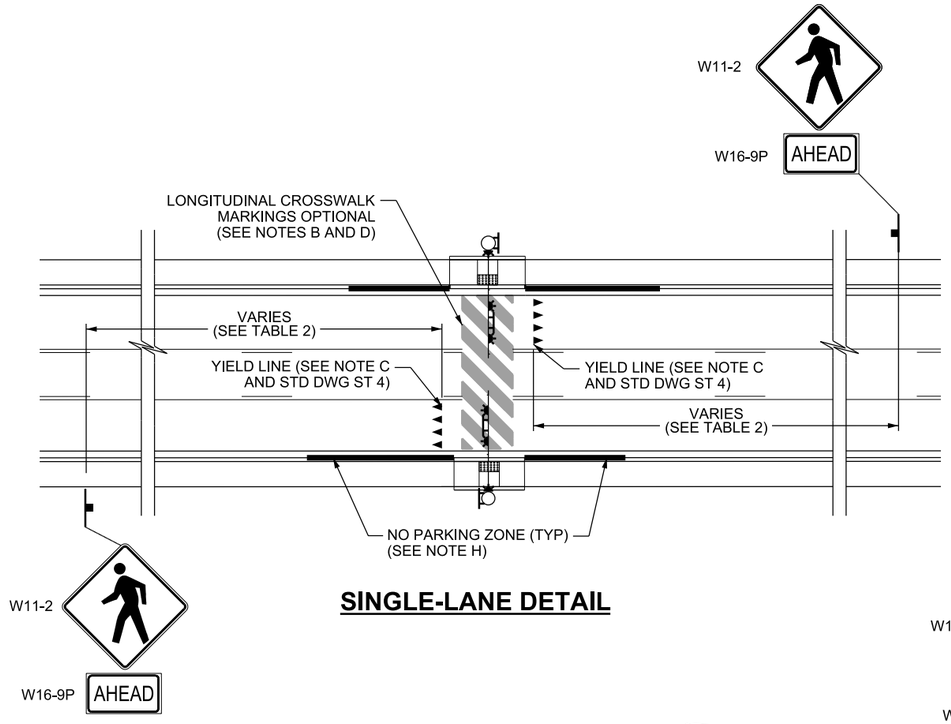

SINGLE-LANE DETAIL

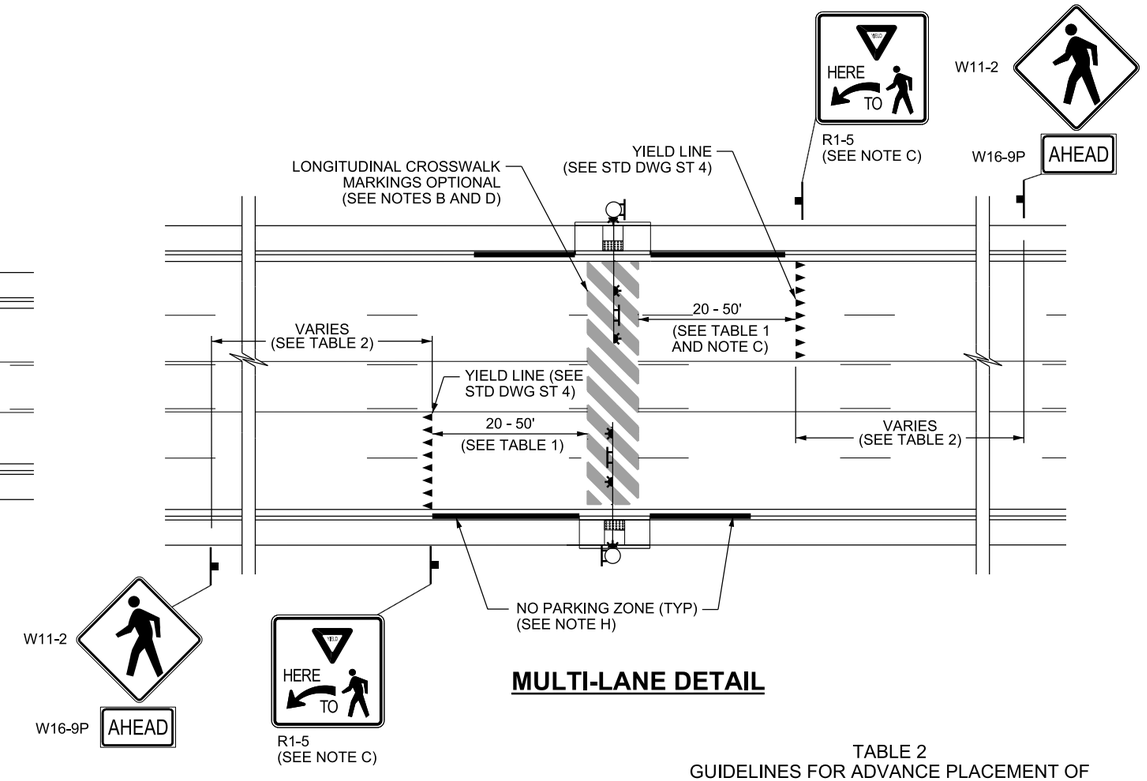

MULTI-LANE DETAIL

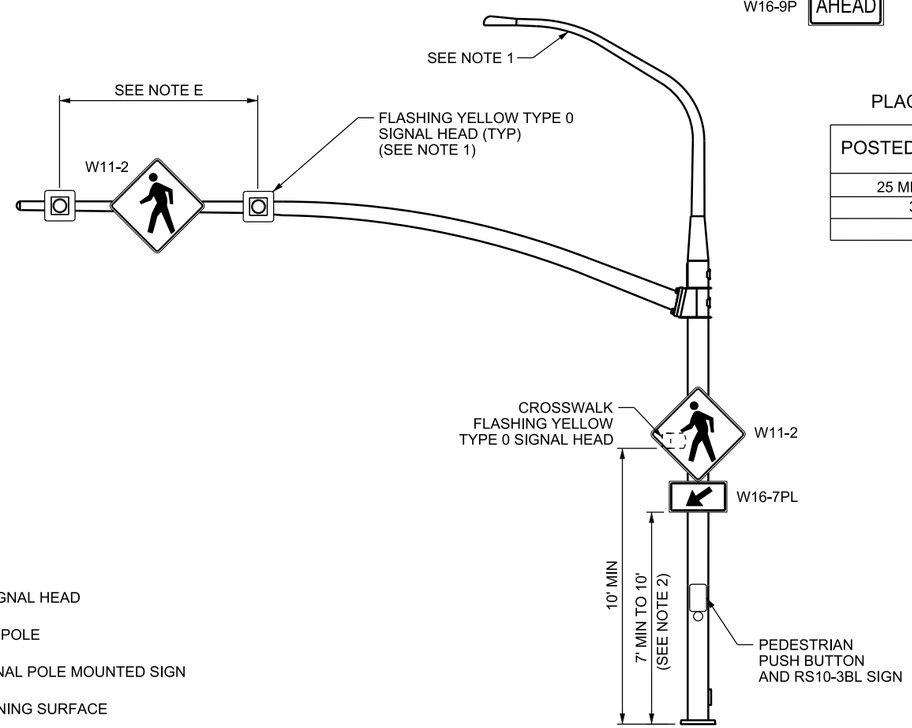

OVERHEAD MOUNT DETAIL

LEGEND

- YELLOW TYPE 0 SIGNAL HEAD
- MAST ARM SIGNAL POLE
- MAST ARM OR SIGNAL POLE MOUNTED SIGN
- DETECTABLE WARNING SURFACE
- GROUND MOUNT SIGN

TABLE 1
PLACEMENT OF YIELD LINES/NO PARKING

POSTED SPEED RANGE	PLACEMENT DISTANCE
25 MPH AND BELOW	20 FT
30 - 40 MPH	35 FT
45 MPH	50 FT

TABLE 2
GUIDELINES FOR ADVANCE PLACEMENT OF PEDESTRIAN CROSSING WARNING SIGNS
(SEE UTAH MUTCD TABLE 2C-4 FOR COMPLETE TABLE)

POSTED SPEED	ADVANCE PLACEMENT DISTANCE
20-35 MPH	100 FT
40 MPH	125 FT
45 MPH	175 FT

NOTES:

1. DO NOT PLACE RETROREFLECTIVE TAPE ON TYPE 0 SIGN HEAD BACKPLATES.
2. INCREASE MOUNTING HEIGHT OF W11-2 SIGN AND W16-7PL PLAQUE IF BLOCKED BY OTHER SIGNS OR OBSTRUCTIONS. USE A 10 FT MOUNTING HEIGHT TO BOTTOM OF W16-7PL PLAQUE IN MULTI-LANE SITUATIONS TO PREVENT VISUAL BLOCKING BY R1-5 SIGN.

DESIGN-ONLY NOTES:

A. INSTALL STREET LIGHTING UNLESS DIRECTED OTHERWISE BY REGION TRAFFIC OPERATIONS ENGINEER.

B. USE LONGITUDINAL CROSSWALK MARKINGS WHEN REQUIRED BY REGION TRAFFIC OPERATIONS ENGINEER.

C. PLACE YIELD LINE 4 FT FROM CROSSWALK ON SINGLE-LANE APPROACHES. USE "YIELD HERE TO PEDESTRIANS" R-1-5 SIGN AND SEE TABLE 1 FOR YIELD LINE PLACEMENT ON MULTI-LANE APPROACHES.

D. PROVIDE REQUIRED SCHOOL CROSSING SIGNING AND PAVEMENT MARKINGS AT SCHOOL CROSSWALKS.

E. CENTER SIGNAL HEAD IN EACH THRU LANE. PROVIDE W11-2 SIGN BETWEEN ALL SIGNAL HEADS. FOR SINGLE THRU LANE APPROACHES, CENTER W11-2 SIGN IN THE LANE AND SPACE SIGNAL HEADS AT LEAST 8 FT APART.

F. DO NOT INSTALL FLASHING BEACON CROSSWALK ON ROADWAYS WITH SPEEDS GREATER THAN 45 MPH UNLESS DIRECTED BY REGION TRAFFIC OPERATIONS ENGINEER. SEE STD DWG DD 19.

G. PLACE FLASHING BEACON ASSEMBLIES ON A SINGLE OR TWO SEPARATE MAST ARMS.

H. PLACE NO PARKING SIGNS TO PROHIBIT PARKING AT THE PLACEMENT DISTANCE IN TABLE 1 BEFORE AND 20 FT AFTER CROSSWALK. NO ACCESSES ARE ALLOWED IN THIS AREA.

I. DO NOT INSTALL FLASHING BEACON CROSSWALK WITHIN A REDUCED SPEED SCHOOL ZONE.

REVISIONS

NO.	DATE	APPR.	REMARKS

UTAH DEPARTMENT OF TRANSPORTATION
STANDARD DRAWINGS FOR ROAD AND BRIDGE CONSTRUCTION
SALT LAKE CITY, UTAH

RECOMMENDED FOR APPROVAL — JAN. 01, 2017 DATE
CHAIRMAN STANDARDS COMMITTEE APPROVED — JAN. 01, 2017 DATE
DEPUTY DIRECTOR

OVERHEAD FLASHING BEACON AT A MIDBLOCK CROSSWALK
STANDARD DRAWING TITLE

STD. DWG. NO.
SL 6F

DGN File: L:\Standard_Drawings\Imperial\2017 Approved\:All Drawings\SL06F.dgn
28-NOV-2016

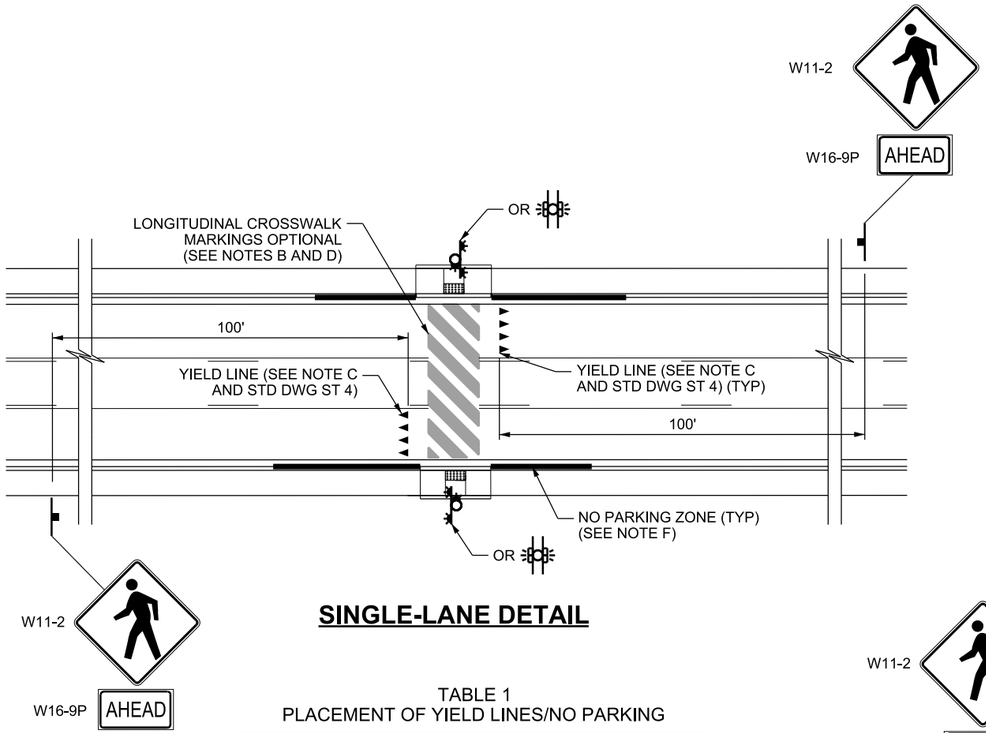

SINGLE-LANE DETAIL

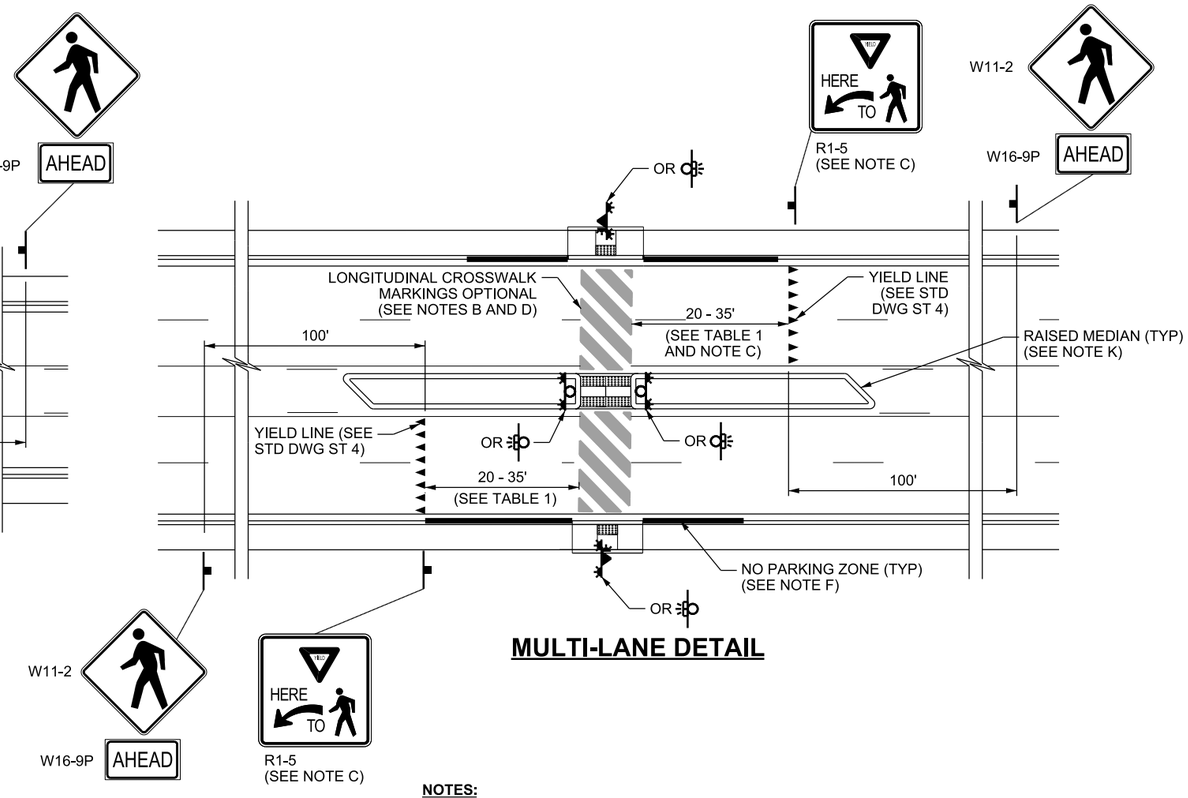

MULTI-LANE DETAIL

TABLE 1
PLACEMENT OF YIELD LINES/NO PARKING

POSTED SPEED RANGE	PLACEMENT DISTANCE
25 MPH AND BELOW	20 FT
30 - 40 MPH	35 FT

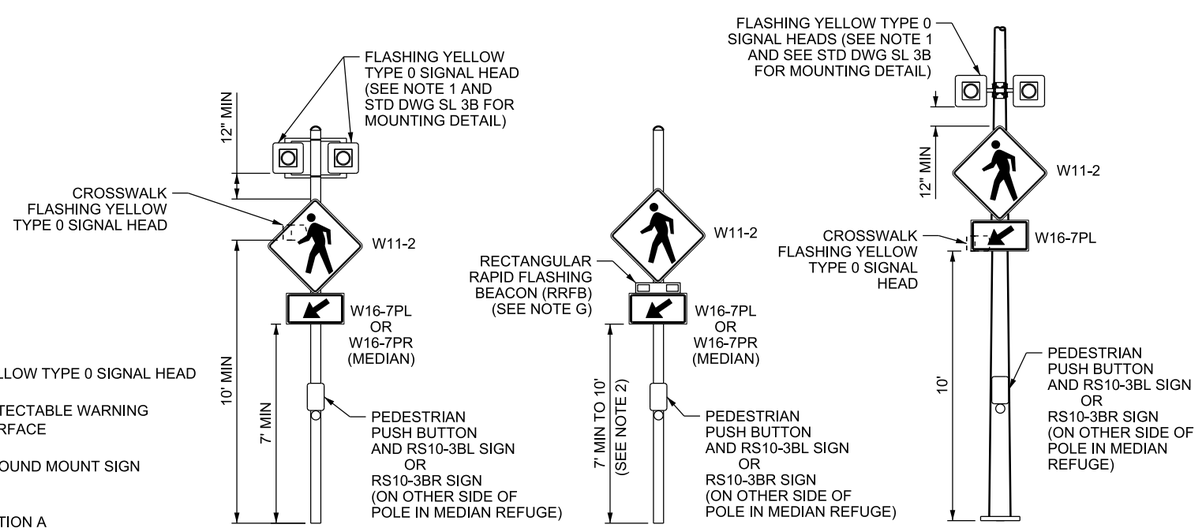

LEGEND

- YELLOW TYPE 0 SIGNAL HEAD
- DETECTABLE WARNING SURFACE
- GROUND MOUNT SIGN
- OPTION A
- OPTION B
- OPTION B - BACK TO BACK (SEE NOTE L)
- OPTION C

OPTION A FLASHING BEACON DETAIL

15 FT TRAFFIC SIGNAL POLE (SEE NOTES A, I, AND STD DWG SL 1E)

OPTION B RRFB DETAIL

15 FT TRAFFIC SIGNAL POLE (SEE NOTES A, I, J, AND STD DWG SL 1E)

OPTION C HIGH-MOUNT FLASHING BEACON DETAIL

LUMINAIRE POLE (SEE NOTES A, I, AND STD DWG SL 5B)

NOTES:

1. DO NOT PLACE RETROREFLECTIVE TAPE ON TYPE 0 SIGN HEAD BACKPLATES.
2. INCREASE MOUNTING HEIGHT OF W11-2 SIGN AND W16-7PL PLAQUE IF BLOCKED BY OTHER SIGNS OR OBSTRUCTIONS. USE A 10 FT TO BOTTOM OF SIGN MOUNTING HEIGHT FOR OPTION B ON OUTSIDE SHOULDER IN MULTI-LANE SITUATIONS TO PREVENT VISUAL BLOCKING FROM R1-5 SIGN.

DESIGN-ONLY NOTES:

A. INSTALL STREET LIGHTING UNLESS DIRECTED OTHERWISE BY REGION TRAFFIC OPERATIONS ENGINEER.

B. USE LONGITUDINAL CROSSWALK MARKINGS WHEN REQUIRED BY REGION TRAFFIC OPERATIONS ENGINEER.

C. PLACE YIELD LINE 4 FT FROM CROSSWALK ON SINGLE-LANE APPROACHES. USE "YIELD HERE TO PEDESTRIANS" R-1-5 SIGN AND SEE TABLE 1 FOR YIELD LINE PLACEMENT ON MULTI-LANE APPROACHES.

D. PROVIDE REQUIRED SCHOOL CROSSING SIGNING AND PAVEMENT MARKINGS AT SCHOOL CROSSWALKS.

E. DO NOT USE POST-MOUNTED FLASHING BEACON CROSSWALK WHEN POSTED SPEED EXCEEDS 35 MPH UNLESS OTHERWISE DIRECTED BY REGION TRAFFIC OPERATIONS ENGINEER.

F. PLACE NO PARKING SIGNS TO PROHIBIT PARKING AT THE PLACEMENT DISTANCE IN TABLE 1 BEFORE AND 20 FT AFTER CROSSWALK. NO ACCESSES ARE ALLOWED IN THIS AREA.

G. RECTANGULAR RAPID FLASHING BEACON MUST MEET FHWA INTERIM APPROVAL REQUIREMENTS.

H. DO NOT INSTALL FLASHING BEACON CROSSWALK WITHIN A REDUCED SPEED SCHOOL ZONE.

I. DO NOT INSTALL POST-MOUNTED FLASHING BEACONS WHERE THERE ARE THREE OR MORE THRU LANES IN ONE DIRECTION. EACH LANE, INCLUDING TURN LANES, MUST HAVE AN ADJACENT POST-MOUNTED FLASHING BEACON.

J. OPTION B, RRFB REQUIRES TWO BEACONS FOR EACH DIRECTION, ONE ON EACH SIDE.

K. RAISED MEDIAN DIMENSIONS DETERMINED BY LOCATION NEEDS. SEE GW SERIES STD DWGS. MEET LATERAL OFFSET REQUIREMENTS.

L. BACK-TO-BACK CONSISTS OF W11-2 AND W16-7P SIGNS AND FLASHING BEACONS (TYPE 0 OR RRFB) FACING OPPOSITE DIRECTIONS MOUNTED ON THE SAME POLE.

M. DO NOT MIX POST-MOUNTED BEACON TYPES AT A CROSSWALK. USE ALL RRFB'S OR ALL FLASHING BEACONS.

REVISIONS

NO.	DATE	APPR.	REMARKS

UTAH DEPARTMENT OF TRANSPORTATION
STANDARD DRAWINGS FOR ROAD AND BRIDGE CONSTRUCTION
SALT LAKE CITY, UTAH

RECOMMENDED FOR APPROVAL — JAN. 01, 2017 DATE
CHAIRMAN STANDARDS COMMITTEE APPROVED — JAN. 01, 2017 DATE
DEPUTY DIRECTOR

STANDARD DRAWING TITLE
POST-MOUNTED FLASHING BEACON AT A MIDBLOCK CROSSWALK

STD. DWG. NO.
SL 6G

DGN File:L:\Standard Drawings\Imperial\2017 Approved\1-All Drawings\SL06G.dgn
28-NOV-2016

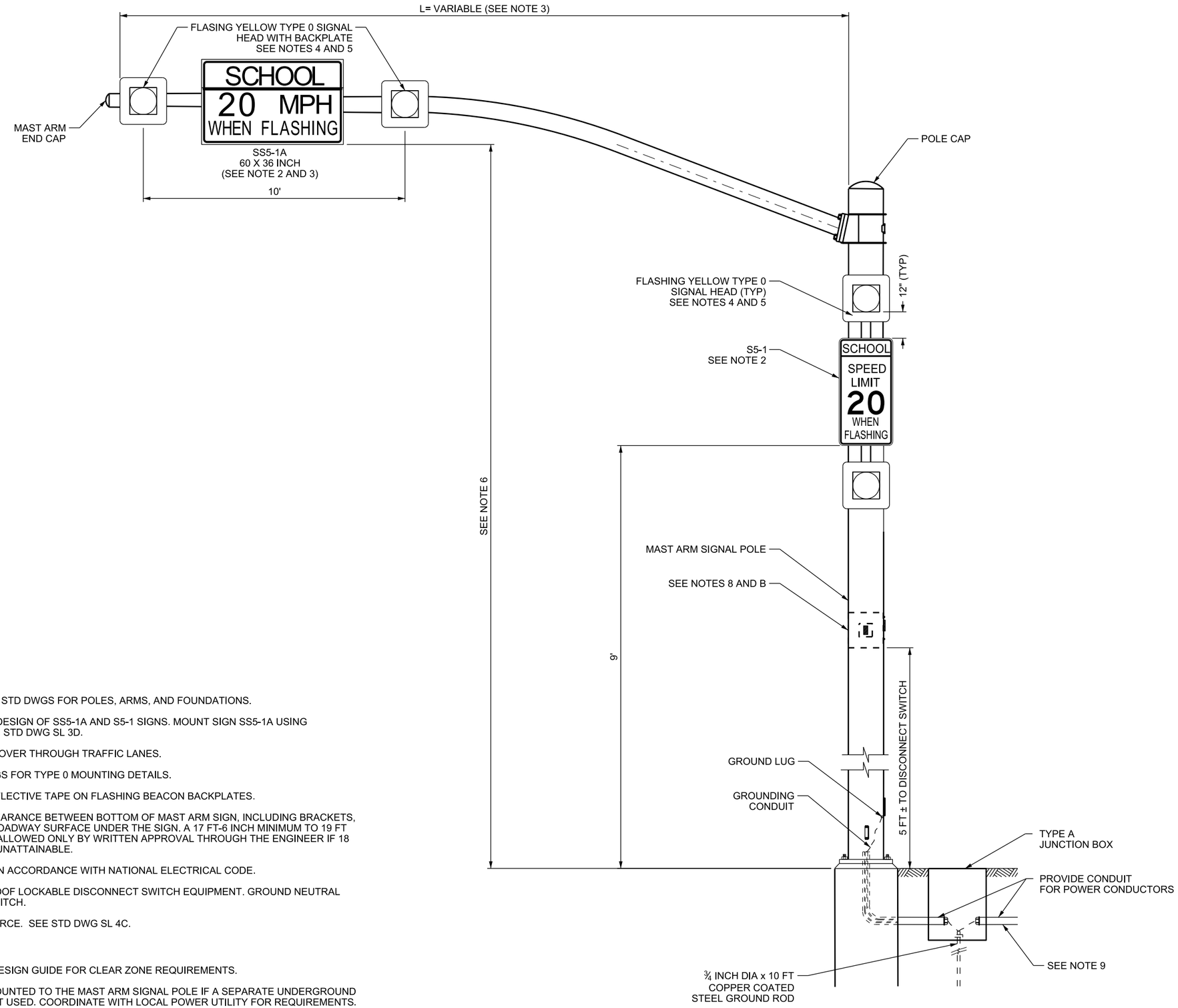

NOTES:

1. SEE SL 1 AND SL 2 SERIES STD DWGS FOR POLES, ARMS, AND FOUNDATIONS.
2. SEE STD DWG SL 7C FOR DESIGN OF SS5-1A AND S5-1 SIGNS. MOUNT SIGN SS5-1A USING SIGN MOUNT OPTION B ON STD DWG SL 3D.
3. CENTER OVERHEAD SIGN OVER THROUGH TRAFFIC LANES.
4. SEE SL 3 SERIES STD DWGS FOR TYPE 0 MOUNTING DETAILS.
5. DO NOT PLACE RETROREFLECTIVE TAPE ON FLASHING BEACON BACKPLATES.
6. PROVIDE 18 FT-6 INCH CLEARANCE BETWEEN BOTTOM OF MAST ARM SIGN, INCLUDING BRACKETS, AND HIGHEST POINT OF ROADWAY SURFACE UNDER THE SIGN. A 17 FT-6 INCH MINIMUM TO 19 FT MAXIMUM CLEARANCE IS ALLOWED ONLY BY WRITTEN APPROVAL THROUGH THE ENGINEER IF 18 FT-6 INCH CLEARANCE IS UNATTAINABLE.
7. INSTALL POWER SUPPLY IN ACCORDANCE WITH NATIONAL ELECTRICAL CODE.
8. USE 30 AMP WEATHERPROOF LOCKABLE DISCONNECT SWITCH EQUIPMENT. GROUND NEUTRAL TO THE FRAME AT THE SWITCH.
9. CONNECT TO POWER SOURCE. SEE STD DWG SL 4C.

DESIGN-ONLY NOTES:

A. USE AASHTO ROADSIDE DESIGN GUIDE FOR CLEAR ZONE REQUIREMENTS.

B. A METER BASE MAY BE MOUNTED TO THE MAST ARM SIGNAL POLE IF A SEPARATE UNDERGROUND SERVICE PEDESTAL IS NOT USED. COORDINATE WITH LOCAL POWER UTILITY FOR REQUIREMENTS.

REVISIONS

NO.	DATE	APPR.	REMARKS

UTAH DEPARTMENT OF TRANSPORTATION
STANDARD DRAWINGS FOR ROAD AND BRIDGE CONSTRUCTION
SALT LAKE CITY, UTAH

RECOMMENDED FOR APPROVAL — JAN. 01, 2017 DATE
CHAIRMAN STANDARDS COMMITTEE APPROVED — JAN. 01, 2017 DATE
DEPUTY DIRECTOR

STANDARD DRAWING TITLE
OVERHEAD SCHOOL SPEED LIMIT ASSEMBLY

STD. DWG. NO.
SL 7A

DGN File: L:\Standard Drawings\Imperial\2017 Approved\1-All Drawings\SL07A.dgn
28-NOV-2016

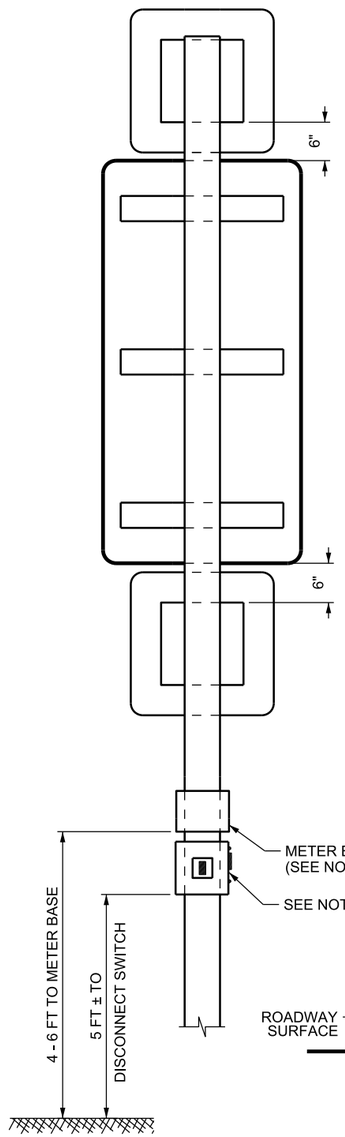

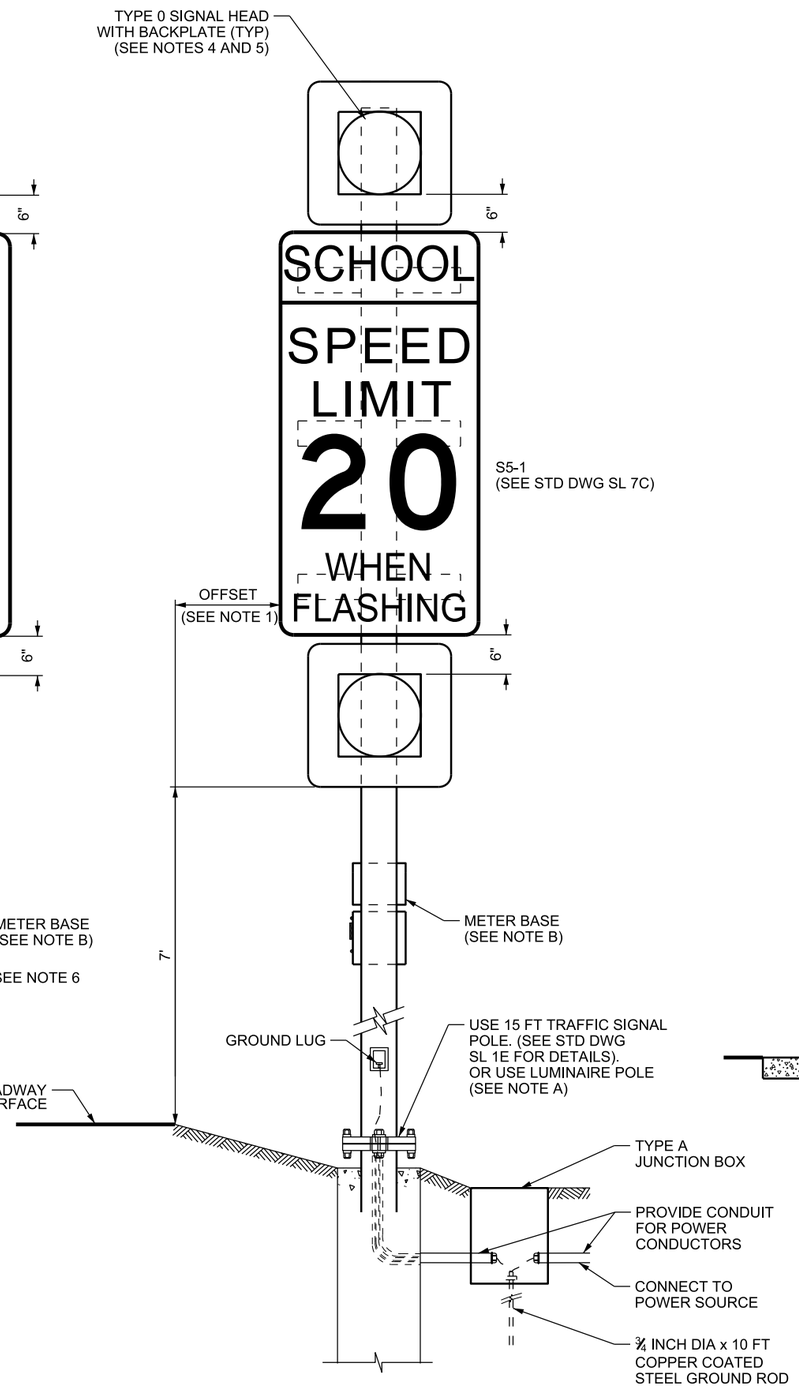

UTILITY POWER OPTION

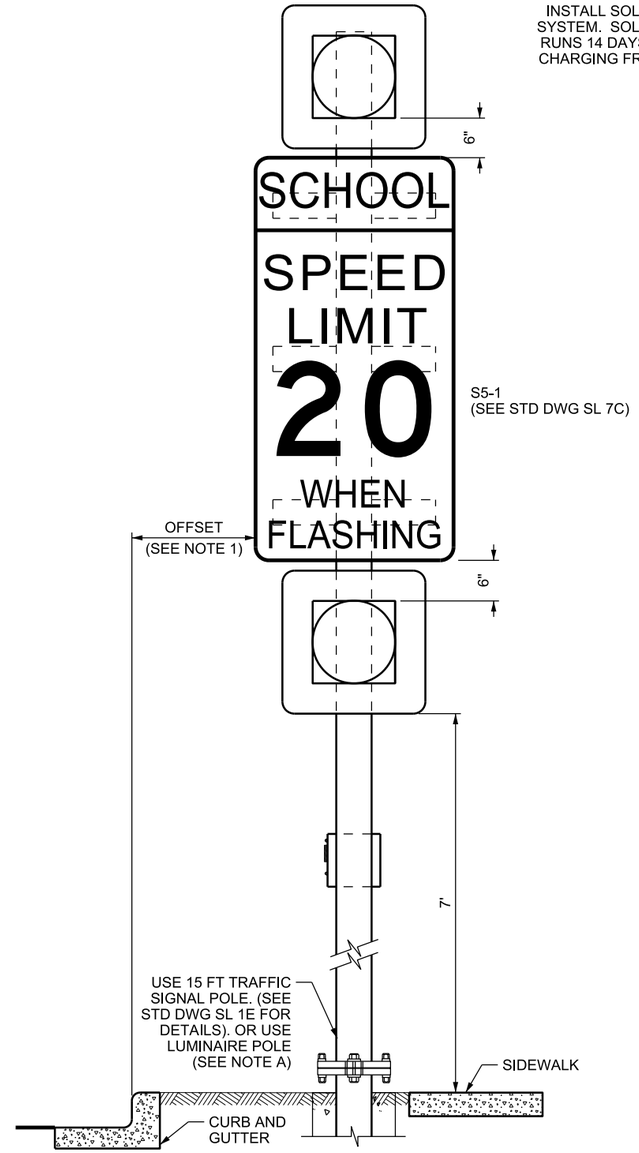

NOTES:

1. OFFSET SIGN ASSEMBLY A MINIMUM OF 18 INCHES FROM FACE OF CURB OR 6 FT FROM TRAVELED WAY IN ABSENCE OF CURB.
2. INSTALL FACE OF SIGN AT 90 DEGREE ANGLE TO THE EDGE OF ROADWAY.
3. INSTALL POWER SUPPLY IN ACCORDANCE WITH NATIONAL ELECTRICAL CODE.
4. SEE SL 3 SERIES STD DWGS FOR TYPE 0 MOUNTING DETAILS.
5. DO NOT PLACE RETROREFLECTIVE TAPE ON FLASHING BEACON BACKPLATES.
6. USE 30 AMP WEATHERPROOF LOCKABLE DISCONNECT SWITCH EQUIPMENT. GROUND NEUTRAL TO THE FRAME AT THE SWITCH.

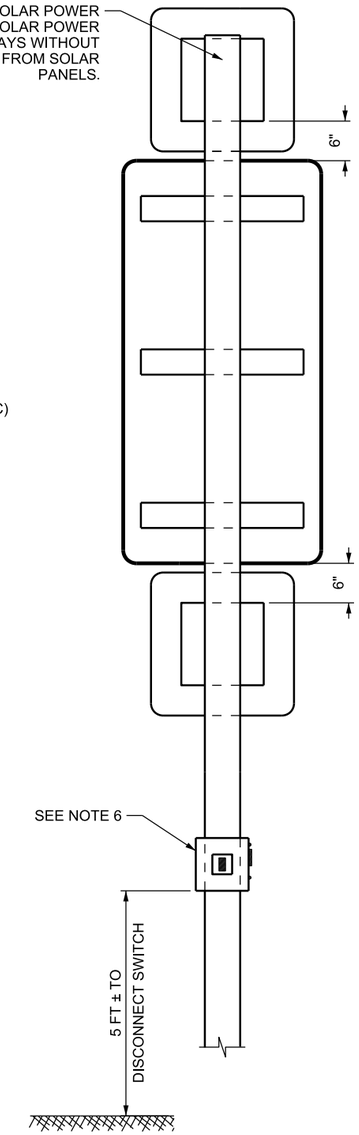

SOLAR POWER OPTION

DESIGN-ONLY NOTES:

A. A LUMINAIRE POLE WILL BE NECESSARY FOR 72 INCH TALL SIGN S5-1 TO ATTAIN REQUIRED CLEARANCES AND HEIGHTS. SEE STD DWG SL 5B FOR LUMINAIRE POLE DETAILS.

B. A METER BASE MAY BE MOUNTED TO THE MAST ARM SIGNAL POLE IF A SEPARATE UNDERGROUND SERVICE PEDESTAL IS NOT USED. COORDINATE WITH LOCAL POWER UTILITY FOR REQUIREMENTS.

C. DO NOT USE OVERSIZED S5-1 SIGNS ON 15 FT TRAFFIC POLES.

REVISIONS

NO.	DATE	APPR.	REMARKS

UTAH DEPARTMENT OF TRANSPORTATION
STANDARD DRAWINGS FOR ROAD AND BRIDGE CONSTRUCTION
SALT LAKE CITY, UTAH

RECOMMENDED FOR APPROVAL — JAN. 01, 2017 DATE
CHAIRMAN STANDARDS COMMITTEE APPROVED — JAN. 01, 2017 DATE
DEPUTY DIRECTOR

STANDARD DRAWING TITLE
POST-MOUNTED
SCHOOL SPEED LIMIT
ASSEMBLY

STD. DWG. NO.
SL 7B

DGN File: L:\Standard_Drawings\Imperial\2017 Approved\1-All Drawings\SL07B.dgn
28-NOV-2016

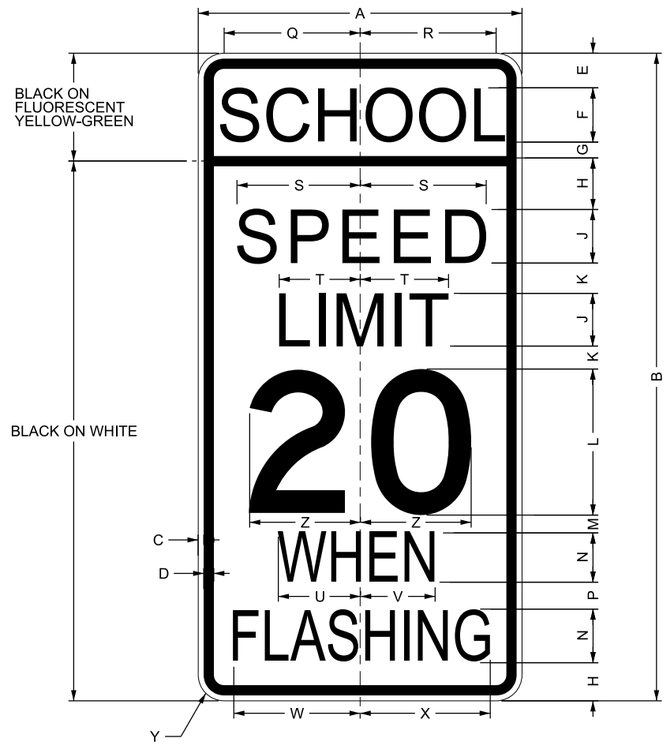

S5-1

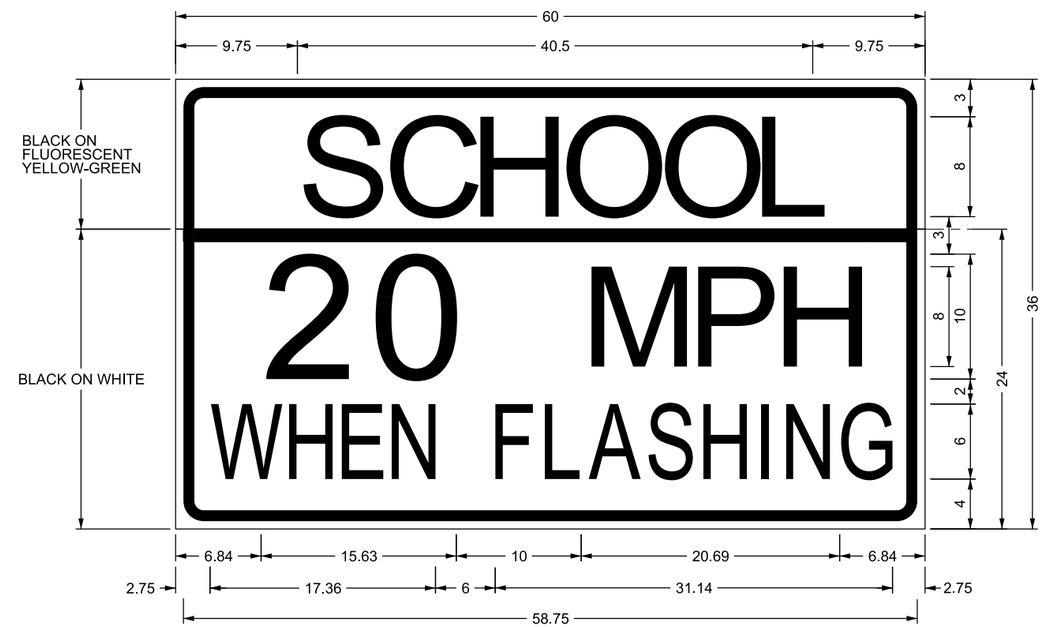

SS5-1a SCHOOL 20 MPH WHEN FLASHING Sign Overhead;
2.25" Radius, 0.88" Border, 0.63" Indent, Black on Fluorescent yellow green;
"SCHOOL" D;
2.25" Radius, 0.88" Border, 0.63" Indent, Black on White;
"20 MPH" D; "WHEN FLASHING" C;

SIGN	DIMENSION (INCHES)										
	A	B	C	D	E	F	G	H	J	K	L
CONVENTIONAL ROAD	24	48	⅜	⅝	2 ½	4D	1 ½	4	4E	2	10E
OVERSIZE	36	72	⅝	⅞	3 ¾	6D	2 ¼	6	6E	4	14E

SIGN	DIMENSION (INCHES)											
	M	N	P	R	S	T	U	V	W	X	Y	Z
CONVENTIONAL ROAD	3	2 ½ D	2	10 ¼	9 9/16	7 7/16	5 3/16	5 ⅛	9 3/16	9 ⅝	1 ½	9 ¼
OVERSIZE	4	4D	2	15 ⅜	14 ⅜	11	6 15/16	6 13/16	12 ¼	12 ⅞	2 ¼	13 ⅞

NOTES:

1. USE RETROREFLECTIVE SIGN SHEETING FOR ALL BACKGROUND COLORS AS NOTED.

REVISIONS

NO.	DATE	APPR.	REMARKS

UTAH DEPARTMENT OF TRANSPORTATION
STANDARD DRAWINGS FOR ROAD AND BRIDGE CONSTRUCTION
SALT LAKE CITY, UTAH

RECOMMENDED FOR APPROVAL — JAN. 01, 2017 DATE
CHAIRMAN STANDARDS COMMITTEE APPROVED — JAN. 01, 2017 DATE
DEPUTY DIRECTOR

SCHOOL SPEED LIMIT SIGNING
STANDARD DRAWING TITLE

STD. DWG. NO.
SL 7C

DGN File:L:\Standard.Drawings\Imperial\2017 Approved\L-All Drawings\SL07C.dgn
28-NOV-2016

LEGEND

- SIGNAL HEAD
- SIGNAL HEAD
- YELLOW TYPE 0 SIBNAL HEAD
- MAST ARM SIGNAL POLE
- MAST ARM OR SIGNAL POLE MOUNTED SIGN
- ADVANCED RADAR DETECTION
- STOP LINE RADAR DETECTION
- GROUND MOUNT SIGN

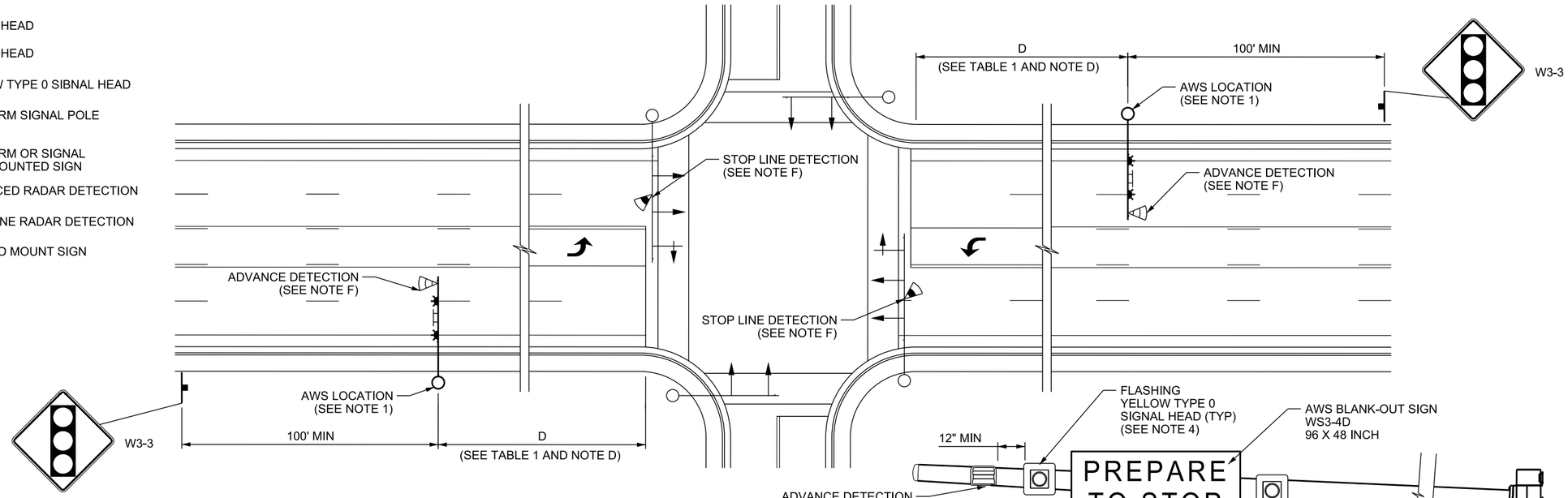

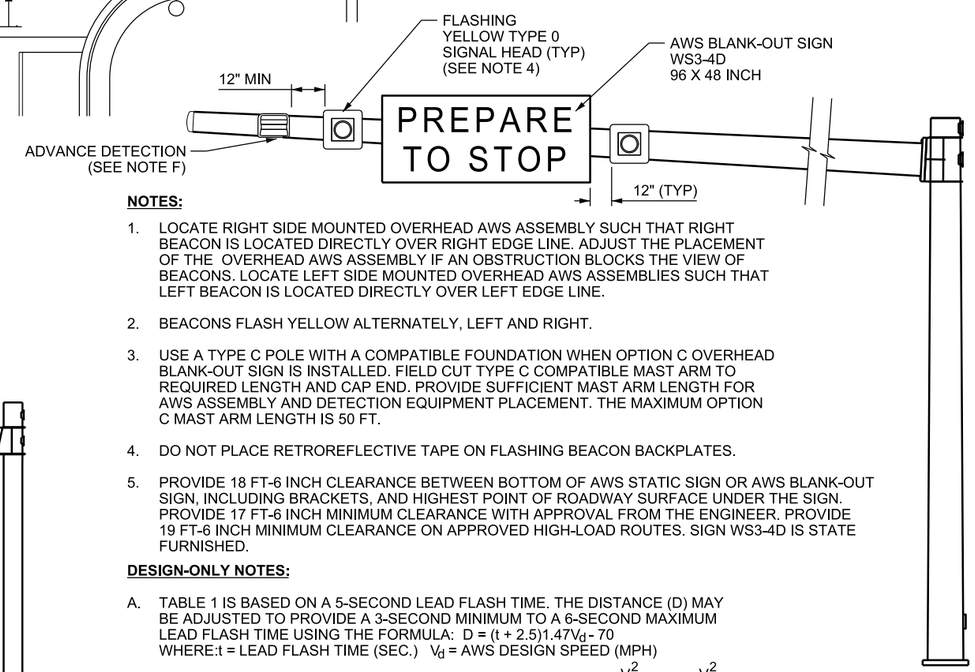

OPTION C
OVERHEAD
BLANK-OUT
SIGN

TYPE C MAST ARM
SIGNAL POLE
(SEE NOTE E, 3, 5, AND G
SEE STD DWG SL 1C)

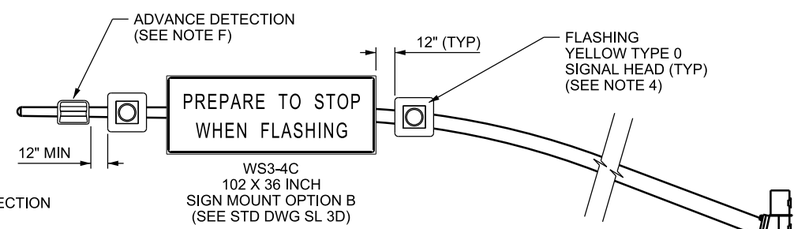

OPTION B
OVERHEAD
STATIC SIGN

TYPE A MAST ARM
SIGNAL POLE
(SEE NOTE E, 5, AND G
SEE STD DWG SL 1A
AND SL 2 SERIES STD DWGS)

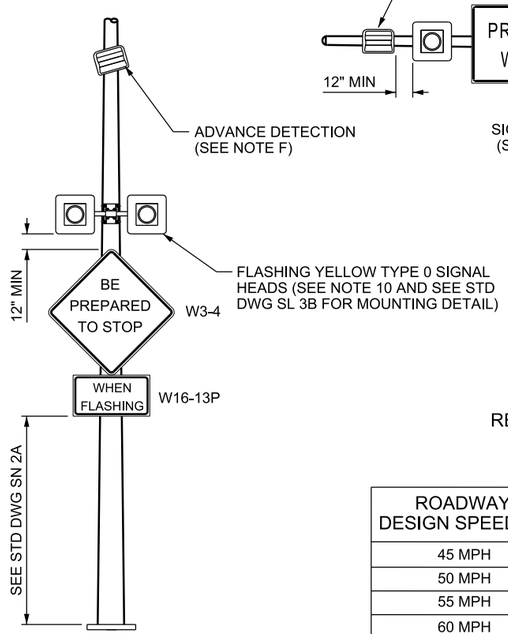

OPTION A
POST MOUNTED SIGN

HIGHWAY LUMINAIRE
POLE
(SEE NOTE E
SEE STD DWG SL 5B)

TABLE 1
RECOMMENDED PLACEMENT
OF AWS ASSEMBLY
(SEE NOTE A)

ROADWAY DESIGN SPEED (V)	AWS DESIGN SPEED (V_d)	DISTANCE FROM STOP LINE (D)
45 MPH	35 MPH	315 FT
50 MPH	40 MPH	370 FT
55 MPH	45 MPH	430 FT
60 MPH	50 MPH	485 FT
65 MPH	55 MPH	540 FT
70 MPH	60 MPH	595 FT
75 MPH	65 MPH	650 FT

NOTES:

1. LOCATE RIGHT SIDE MOUNTED OVERHEAD AWS ASSEMBLY SUCH THAT RIGHT BEACON IS LOCATED DIRECTLY OVER RIGHT EDGE LINE. ADJUST THE PLACEMENT OF THE OVERHEAD AWS ASSEMBLY IF AN OBSTRUCTION BLOCKS THE VIEW OF BEACONS. LOCATE LEFT SIDE MOUNTED OVERHEAD AWS ASSEMBLIES SUCH THAT LEFT BEACON IS LOCATED DIRECTLY OVER LEFT EDGE LINE.
2. BEACONS FLASH YELLOW ALTERNATELY, LEFT AND RIGHT.
3. USE A TYPE C POLE WITH A COMPATIBLE FOUNDATION WHEN OPTION C OVERHEAD BLANK-OUT SIGN IS INSTALLED. FIELD CUT TYPE C COMPATIBLE MAST ARM TO REQUIRED LENGTH AND CAP END. PROVIDE SUFFICIENT MAST ARM LENGTH FOR AWS ASSEMBLY AND DETECTION EQUIPMENT PLACEMENT. THE MAXIMUM OPTION C MAST ARM LENGTH IS 50 FT.
4. DO NOT PLACE RETROREFLECTIVE TAPE ON FLASHING BEACON BACKPLATES.
5. PROVIDE 18 FT-6 INCH CLEARANCE BETWEEN BOTTOM OF AWS STATIC SIGN OR AWS BLANK-OUT SIGN, INCLUDING BRACKETS, AND HIGHEST POINT OF ROADWAY SURFACE UNDER THE SIGN. PROVIDE 17 FT-6 INCH MINIMUM CLEARANCE WITH APPROVAL FROM THE ENGINEER. PROVIDE 19 FT-6 INCH MINIMUM CLEARANCE ON APPROVED HIGH-LOAD ROUTES. SIGN WS3-4D IS STATE FURNISHED.

DESIGN-ONLY NOTES:

A. TABLE 1 IS BASED ON A 5-SECOND LEAD FLASH TIME. THE DISTANCE (D) MAY BE ADJUSTED TO PROVIDE A 3-SECOND MINIMUM TO A 6-SECOND MAXIMUM LEAD FLASH TIME USING THE FORMULA: $D = (t + 2.5)1.47V_d - 70$
WHERE: t = LEAD FLASH TIME (SEC.) V_d = AWS DESIGN SPEED (MPH)

FOR DOWNGRADE APPROACHES OF 2 PERCENT OR GREATER ADD DISTANCE D_g TO D: $D_g = \frac{V_d^2}{9.32 - 30G} - \frac{V_d^2}{9.32}$

WHERE: G = PERCENT GRADE DIVIDED BY 100

B. AWS DESIGN SPEED (V_d) IS 10 MPH SLOWER THAN ROADWAY DESIGN SPEED.

C. PLACE AWS TO PROVIDE 2 SECONDS MINIMUM SIGHT DISTANCE ON APPROACH.

D. INSTALL AWS ASSEMBLY THE SAME DISTANCE FROM THE STOP BAR IN BOTH DIRECTIONS IF AWS WARRANT CRITERIA ARE MET FOR BOTH DIRECTIONS OR AS DIRECTED BY THE REGION TRAFFIC OPERATIONS ENGINEER. PROVIDE DETECTION IN BOTH DIRECTIONS AT A MINIMUM ACCORDING TO NOTE F.

E. COORDINATE WITH THE REGION TRAFFIC OPERATIONS ENGINEER TO DETERMINE WHICH OPTION TO USE. DO NOT INSTALL POST-MOUNTED AWS ON MULTI-LANE APPROACH WITHOUT APPROVAL FROM REGION TRAFFIC OPERATIONS ENGINEER.

F. INSTALL ADVANCE DETECTION THE SAME DISTANCE FROM THE STOP BAR IN BOTH DIRECTIONS. STOP LINE DETECTION REQUIRED AT INTERSECTION IN BOTH DIRECTIONS FOR ALL LANES. PLACE ADVANCE DETECTION AS CLOSE TO CENTER OF THRU LANES AS POSSIBLE WHILE MAINTAINING SPACING AS SHOWN.

G. PROTECT WITH AN APPROVED BARRIER OR GUARDRAIL SYSTEM WHEN POLE PLACEMENT IS WITHIN ROADSIDE CLEAR ZONE.

REVISIONS

NO.	DATE	APPR.	REMARKS

UTAH DEPARTMENT OF TRANSPORTATION
STANDARD DRAWINGS FOR ROAD AND BRIDGE CONSTRUCTION
SALT LAKE CITY, UTAH

RECOMMENDED FOR APPROVAL — JAN. 01, 2017 DATE
CHAIRMAN STANDARDS COMMITTEE APPROVED — JAN. 01, 2017 DATE
DEPUTY DIRECTOR

ADVANCE WARNING
SIGNAL (AWS) SYSTEM

STANDARD DRAWING TITLE

STD. DWG. NO.
SL 8

DGN File:L:\Standard Drawings\Imperial\2017 Approved\1-All Drawings\SL08.dgn
28-NOV-2016

GENERAL NOTES (APPLIES TO ALL SN SERIES STANDARD DRAWINGS):

NOTES:

1. TURN THE SIGN SLIGHTLY AWAY FROM THE ROAD WHERE MIRROR REFLECTION FROM THE SIGN FACE IS ENCOUNTERED TO SUCH A DEGREE AS TO REDUCE LEGIBILITY. TURN SIGNS TOWARDS THE ROAD IF SIGN IS INSTALLED 30 FT OR MORE FROM THE EDGE OF PAVEMENT. THE ANGLE OF PLACEMENT IS DETERMINED BY THE DIRECTION OF APPROACHING TRAFFIC RATHER THAN BY THE ROADWAY EDGE AT THE POINT WHERE THE SIGN IS LOCATED ON CURVED ALIGNMENTS.

2. PLACE THE REFERENCE SIGN AT THE TRUE MILEPOINT, WHERE POSSIBLE. PLACE AS FAR AS 30 FEET FROM THE TRUE MILEPOINT, IN EITHER DIRECTION IF A REFERENCE SIGN CANNOT BE PLACED AT THE TRUE MILEPOINT. OMIT THE SIGN, IF THE SIGN CANNOT BE PLACED WITHIN 30 FEET OF THE TRUE MILEPOINT.

3. INSTALL ALL GROUND MOUNTED SIGNS WITHIN UDOT RIGHT OF WAY ON BREAKAWAY BASE AND POST.

4. USE ELECTRONIC ELEMENTS THAT ARE CONSISTENT WITH CURRENT UDOT PRACTICES AS DETERMINED BY THE TRAFFIC MANAGEMENT DIVISION IF A SIGN INCLUDES VARIABLE OR ELECTRONIC ELEMENTS.

5. USE BA SERIES STD DWGS (MEDIAN SMALL SIGN SECTIONS) ON NEW PROJECTS FOR SMALL SIGNS INSTALLED IN CENTER MEDIAN.

6. PRECAST FOUNDATION MAY BE USED ON GROUND MOUNT SIGNS.

7. INSTALL RED DELINEATORS ON THE BACKSIDE OF ALL DELINEATOR POST, ON ALL INTERSTATE AND FREEWAY OFF RAMPS. THE "DO NOT ENTER" AND "WRONG WAY" SIGNS WILL HAVE A 4 INCH RED RETROREFLECTIVE STRIP ON THE POST.

8. DO NOT INSTALL SIGN BASE UNTIL FINAL GRADE HAS BEEN COMPLETED.

DESIGN-ONLY NOTES:

A. USE UTAH MUTCD, UTAH STANDARD HIGHWAY SIGNS, UTAH SIGN MANUAL AND STANDARD HIGHWAY SIGN MANUAL FOR ALL SIGN DESIGN.

B. SEE STRUCTURES DESIGN AND DETAILING MANUAL FOR OVERHEAD SIGNS DETAILS .

C. SIGNS WITHIN A 15 FT RADIUS SHOULD BE INSTALLED ON THE SAME POST IF ALLOWED BY THE MUTCD.

D. COORDINATE WITH THE LOCAL ENTITY AND UTILITIES BEFORE INSTALLING SIGNS ON LIGHT POLES, DECORATIVE LIGHT POLES, AND GUIDE WIRE POLES.

E. USE A 30 X 36 INCH SPEED LIMIT SIGN ON RURAL ROADS WHERE SPEED LIMIT EXCEEDS 45 MPH.

REVISIONS

NO.	DATE	APPR.	REMARKS

UTAH DEPARTMENT OF TRANSPORTATION
STANDARD DRAWINGS FOR ROAD AND BRIDGE CONSTRUCTION
SALT LAKE CITY, UTAH

RECOMMENDED FOR APPROVAL — JAN. 01, 2017 DATE

CHAIRMAN STANDARDS COMMITTEE APPROVED — JAN. 01, 2017 DATE

DEPUTY DIRECTOR

STANDARD DRAWING TITLE: SIGN DRAWING SERIES GENERAL NOTES

STD. DWG. NO. SN 1

28-NOV-2016 DGN File:L:\Standard Drawings\Imperial\2017 Approved\1-All Drawings\SN01.dgn

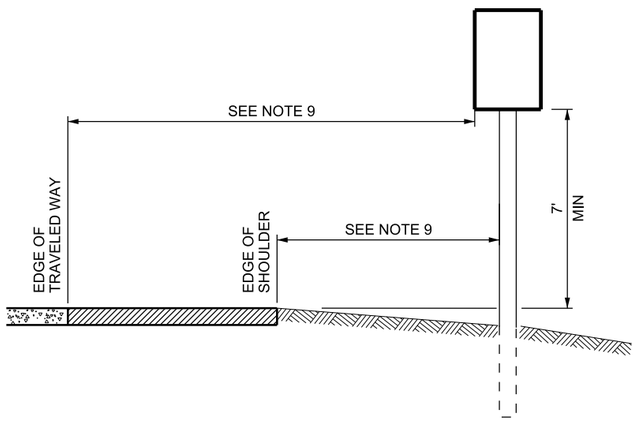

W/O SUPPLEMENTAL SIGN

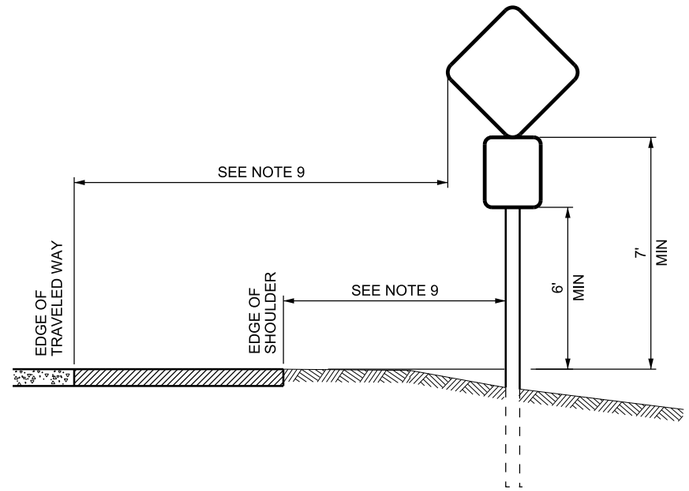

W/SUPPLEMENTAL SIGN

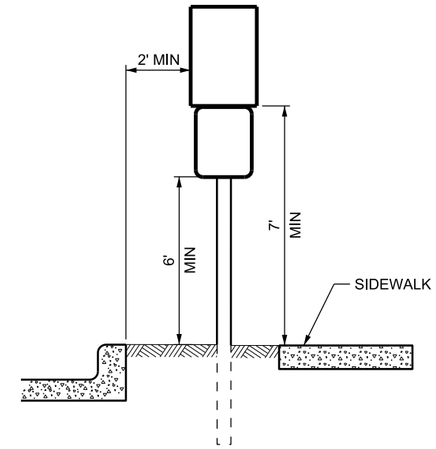

W/CURB & GUTTER

SEE NOTE 5 & 7

SINGLE SUPPORT SIGNS

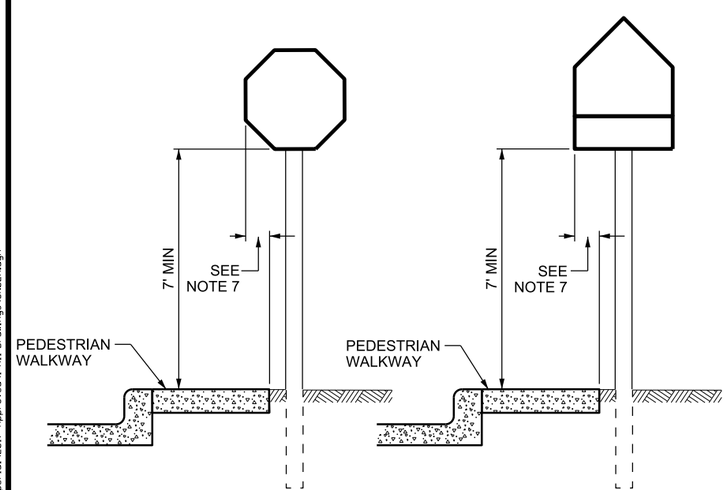

OVER PEDESTRIAN WALKWAY OR BICYCLE MOVEMENT

SEE NOTE 5 & 7

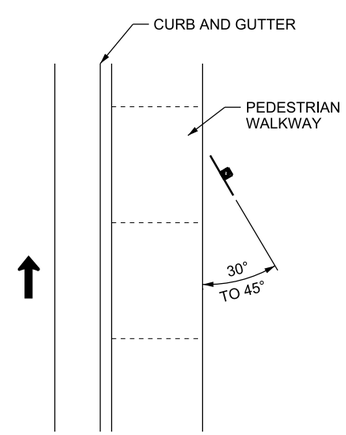

BEHIND ADJACENT PEDESTRIAN WALKWAY

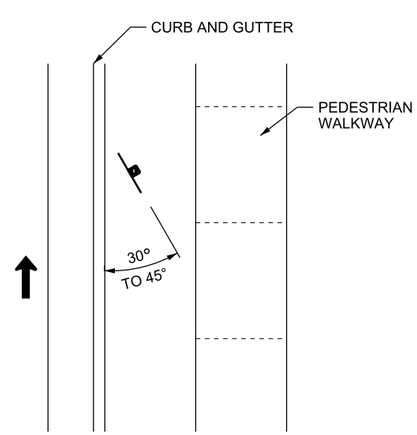

BEHIND CURB & GUTTER

SINGLE SUPPORT SIGNS

PARKING SIGNS

SEE NOTE 6

NOTES:

1. MINIMUM MOUNTING HEIGHT FOR SIGNS IS THE BOTTOM OF THE PRIMARY SIGN WHEN THERE IS NOT A SUPPLEMENTAL SIGN, OR THE BOTTOM OF THE SUPPLEMENTAL SIGN WHEN USED.
2. PLACE SIGN BEHIND PEDESTRIAN WALKWAY AT 7 FT MIN HEIGHT WHEN SIDEWALK IS ADJACENT TO CURB AND GUTTER.
3. MINIMUM SIGN HEIGHT MAY BE REDUCED ON CONVENTIONAL ROADS IN RURAL AREAS TO 6 FT MIN EXCEPT IN LOCATIONS OVER PEDESTRIAN OR BICYCLE MOVEMENTS.
4. SIGN MINIMUM MOUNTING HEIGHT IS SHOWN. MAXIMUM MOUNTING HEIGHT IS 1 FT ABOVE MIN MOUNTING HEIGHT.
5. MAINTAIN ADA REQUIREMENTS WHEN INSTALLING SIGN WITHIN SIDEWALK.
6. PLACE PARKING REGULATION SIGNS AT AN ANGLE NOT LESS THAN 30 DEGREES NOR MORE THAN 45 DEGREES WITH THE LINE OF TRAFFIC FLOW IN ORDER TO BE VISIBLE TO APPROACHING TRAFFIC.
7. PROVIDE A 7 FT MIN MOUNTING HEIGHT FOR ALL SIGNS AND PLAQUES WHEN SIGN ENCROACHES 4 INCH OR MORE LATERALLY ABOVE A PEDESTRIAN WALK WAY.
8. SEE STD DWG SN 2B FOR MEDIAN BARRIER MOUNT DETAIL.
9. INSTALL SIGNS 15 FT FROM TRAVELED WAY OR 6 FT FROM THE EDGE OF SHOULDER, WHICHEVER IS GREATER.

REVISIONS

NO.	DATE	APPR.	REMARKS

UTAH DEPARTMENT OF TRANSPORTATION
STANDARD DRAWINGS FOR ROAD AND BRIDGE CONSTRUCTION
SALT LAKE CITY, UTAH

RECOMMENDED FOR APPROVAL — JAN. 01, 2017 DATE
CHAIRMAN STANDARDS COMMITTEE APPROVED — JAN. 01, 2017 DATE
DEPUTY DIRECTOR

STANDARD DRAWING TITLE: PLACEMENT OF GROUND MOUNT SIGNS

STD. DWG. NO.
SN 2A

DGN File: L:\Standard Drawings\Imperial\2017 Approved\1-All Drawings\SN02A.dgn
28-NOV-2016

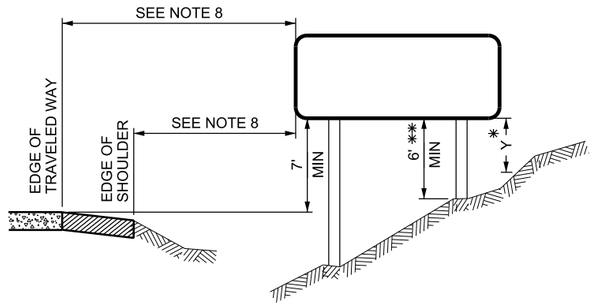

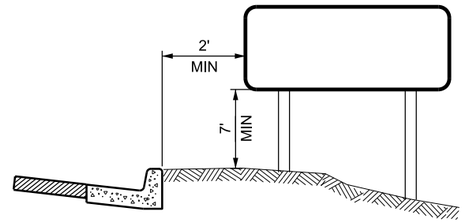

MULTIPLE SUPPORT SIGNS

* Y= 3 FT MIN GROUND TO ANY POINT OF SIGN PANEL OUTSIDE OF CLEAR ZONE

** 7 FT MIN WITHIN CLEAR ZONE

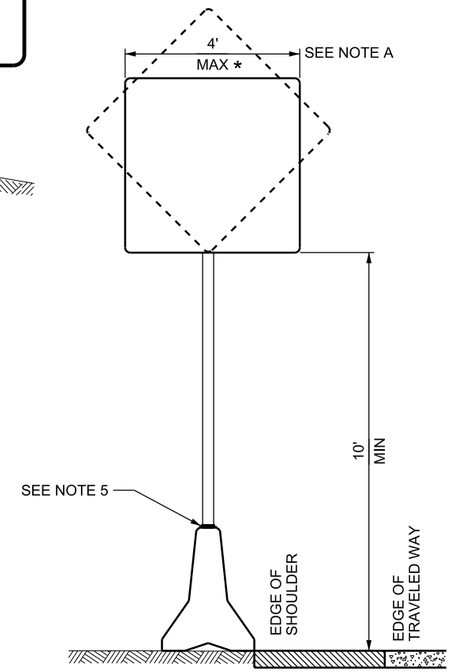

MEDIAN BARRIER MOUNT

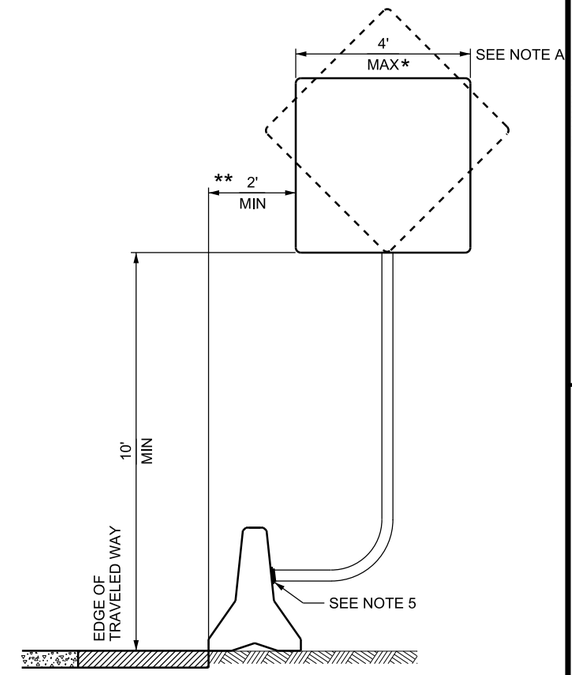

SHOULDER BARRIER MOUNT

* INCLUDES 4 FT x 4 FT DIAMOND WARNING SIGN

** MINIMUM DISTANCE REDUCED TO 1 FT- 2 INCHES FOR 4 FT x 4 FT DIAMOND SIGN

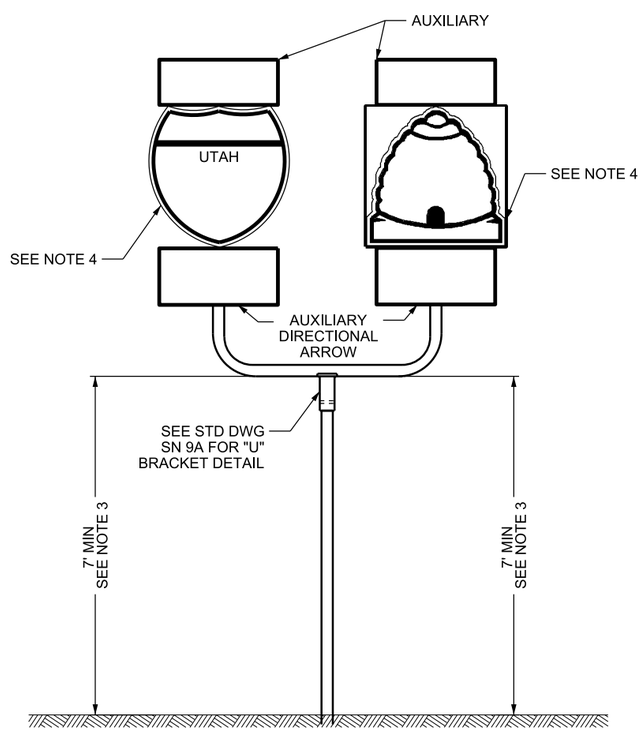

ROUTE SIGN ASSEMBLY

ROUTE SIGNS MIN SIZE		
	1 & 2 DIGIT (INCHES)	3 DIGIT (INCHES)
FREEWAY & EXPRESSWAY	36 x 36	45 x 36
CONVENTIONAL	24 x 24	30 x 24

NOTES:

1. PLACE NEAR EDGE OF SIGNS A MINIMUM OF 6 FT FROM TRAFFIC FACE OF BARRIER WHEN PLACED BEHIND BARRIER.
2. PROVIDE A 7 FT MIN MOUNTING HEIGHT FOR ALL SIGNS AND PLAQUES WHEN SIGN ENCROACHES 4 INCH OR MORE LATERALLY ABOVE PEDESTRIAN WALKWAY.
3. SIGN MINIMUM MOUNTING HEIGHT IS SHOWN. MAXIMUM MOUNTING HEIGHT IS 1 FT ABOVE MINIMUM MOUNTING HEIGHT.
4. MOUNT PRIMARY ROUTE SIGNS AT SAME HEIGHT.
5. REFER TO SN 14 SERIES STD DWGS FOR MEDIAN AND SHOULDER BARRIER SIGN MOUNTING BRACKET DETAILS.
6. SEE STD DWG SN 15B2 TO DETERMINE POST SIZES.
7. MOUNT THE LOWEST SIGN IN THE ROUTE SIGN ASSEMBLY AT THE HEIGHT PRESCRIBED FOR SINGLE SIGNS.
8. INSTALL SIGNS 15 FT FROM TRAVELED WAY OR 6 FT FROM THE EDGE OF PAVEMENT, WHICHEVER IS GREATER.

DESIGN-ONLY NOTES:

A. NO LIMIT TO SIGN WIDTH WHEN SIGN MOUNTING HEIGHT IS 17 FT OR HIGHER.

REVISIONS

NO.	DATE	APPR.	REMARKS

UTAH DEPARTMENT OF TRANSPORTATION
STANDARD DRAWINGS FOR ROAD AND BRIDGE CONSTRUCTION
SALT LAKE CITY, UTAH

RECOMMENDED FOR APPROVAL — JAN. 01, 2017 DATE
CHAIRMAN STANDARDS COMMITTEE APPROVED — JAN. 01, 2017 DATE
DEPUTY DIRECTOR

PLACEMENT OF GROUND MOUNT AND BARRIER MOUNT SIGNS
STANDARD DRAWING TITLE

STD. DWG. NO.
SN 2B

DGN File:L:\Standard_Drawings\Imperial\2017 Approved\1-All Drawings\SN02B.dgn
28-NOV-2016

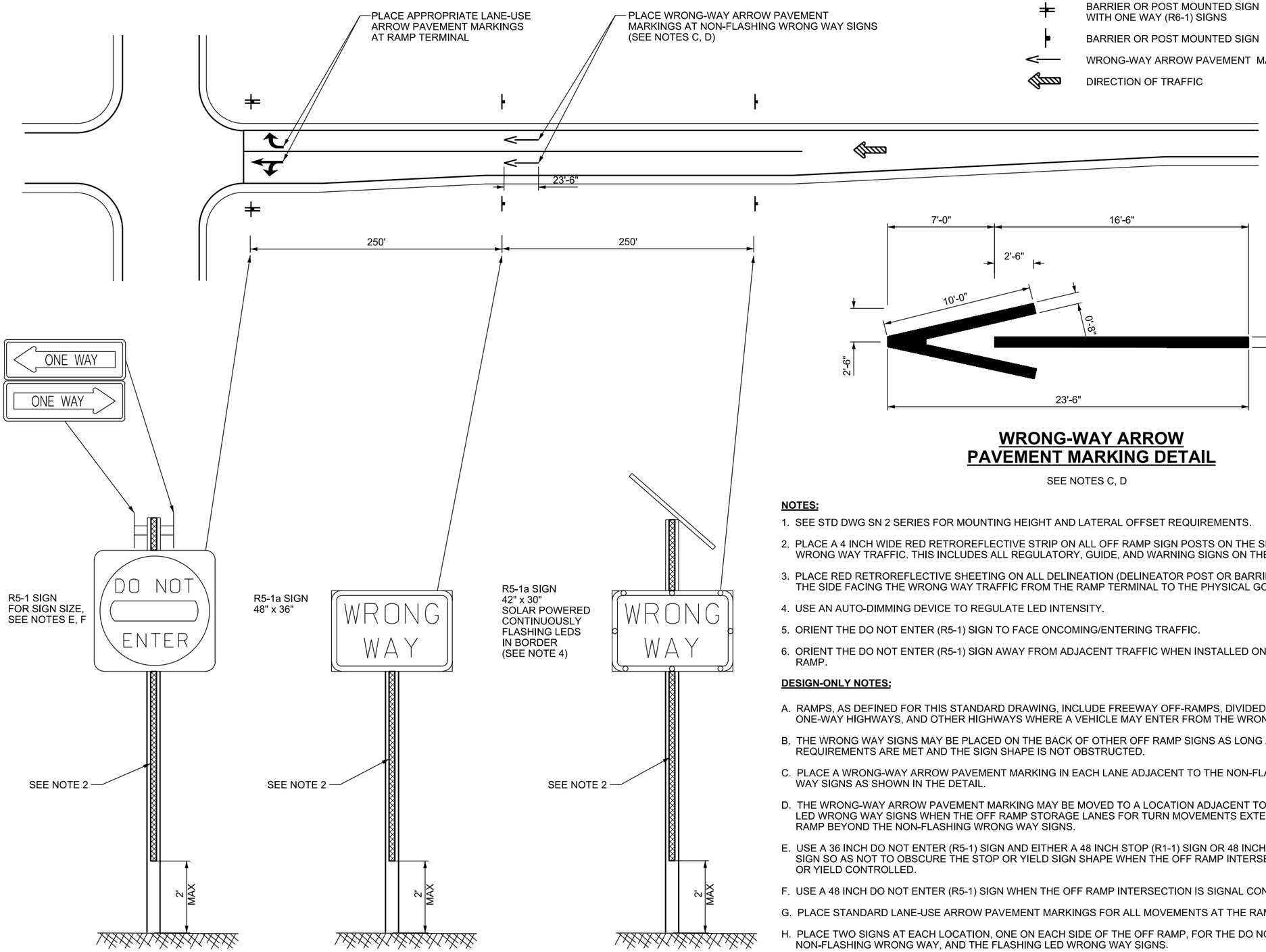

LEGEND

- BARRIER OR POST MOUNTED SIGN WITH ONE WAY (R6-1) SIGNS
- BARRIER OR POST MOUNTED SIGN
- WRONG-WAY ARROW PAVEMENT MARKING
- DIRECTION OF TRAFFIC

WRONG-WAY ARROW PAVEMENT MARKING DETAIL

SEE NOTES C, D

NOTES:

1. SEE STD DWG SN 2 SERIES FOR MOUNTING HEIGHT AND LATERAL OFFSET REQUIREMENTS.
2. PLACE A 4 INCH WIDE RED RETROREFLECTIVE STRIP ON ALL OFF RAMP SIGN POSTS ON THE SIDE FACING THE WRONG WAY TRAFFIC. THIS INCLUDES ALL REGULATORY, GUIDE, AND WARNING SIGNS ON THE OFF RAMP.
3. PLACE RED RETROREFLECTIVE SHEETING ON ALL DELINEATION (DELINEATOR POST OR BARRIER MOUNT) ON THE SIDE FACING THE WRONG WAY TRAFFIC FROM THE RAMP TERMINAL TO THE PHYSICAL GORE.
4. USE AN AUTO-DIMMING DEVICE TO REGULATE LED INTENSITY.
5. ORIENT THE DO NOT ENTER (R5-1) SIGN TO FACE ONCOMING/ENTERING TRAFFIC.
6. ORIENT THE DO NOT ENTER (R5-1) SIGN AWAY FROM ADJACENT TRAFFIC WHEN INSTALLED ON A TWO-WAY RAMP.

DESIGN-ONLY NOTES:

A. RAMPS, AS DEFINED FOR THIS STANDARD DRAWING, INCLUDE FREEWAY OFF-RAMPS, DIVIDED HIGHWAYS, ONE-WAY HIGHWAYS, AND OTHER HIGHWAYS WHERE A VEHICLE MAY ENTER FROM THE WRONG DIRECTION.

B. THE WRONG WAY SIGNS MAY BE PLACED ON THE BACK OF OTHER OFF RAMP SIGNS AS LONG AS SPACING REQUIREMENTS ARE MET AND THE SIGN SHAPE IS NOT OBSTRUCTED.

C. PLACE A WRONG-WAY ARROW PAVEMENT MARKING IN EACH LANE ADJACENT TO THE NON-FLASHING WRONG WAY SIGNS AS SHOWN IN THE DETAIL.

D. THE WRONG-WAY ARROW PAVEMENT MARKING MAY BE MOVED TO A LOCATION ADJACENT TO THE FLASHING LED WRONG WAY SIGNS WHEN THE OFF RAMP STORAGE LANES FOR TURN MOVEMENTS EXTEND UP THE OFF RAMP BEYOND THE NON-FLASHING WRONG WAY SIGNS.

E. USE A 36 INCH DO NOT ENTER (R5-1) SIGN AND EITHER A 48 INCH STOP (R1-1) SIGN OR 48 INCH YIELD (R1-2) SIGN SO AS NOT TO OBSCURE THE STOP OR YIELD SIGN SHAPE WHEN THE OFF RAMP INTERSECTION IS STOP OR YIELD CONTROLLED.

F. USE A 48 INCH DO NOT ENTER (R5-1) SIGN WHEN THE OFF RAMP INTERSECTION IS SIGNAL CONTROLLED.

G. PLACE STANDARD LANE-USE ARROW PAVEMENT MARKINGS FOR ALL MOVEMENTS AT THE RAMP TERMINAL.

H. PLACE TWO SIGNS AT EACH LOCATION, ONE ON EACH SIDE OF THE OFF RAMP, FOR THE DO NOT ENTER, NON-FLASHING WRONG WAY, AND THE FLASHING LED WRONG WAY SIGNS.

I. FLASHING LED SIGN ASSEMBLIES MAY BE OMMITTED UPON APPROVAL OF THE REGION TRAFFIC OPERATIONS ENGINEER WHEN GEOMETRIC CONSIDERATIONS OR OTHER FACTORS AFFECT THEIR INSTALLATION.

REVISIONS

NO.	DATE	APPR.	REMARKS

UTAH DEPARTMENT OF TRANSPORTATION
STANDARD DRAWINGS FOR ROAD AND BRIDGE CONSTRUCTION
SALT LAKE CITY, UTAH

RECOMMENDED FOR APPROVAL — JAN.01.2017 DATE
CHAIRMAN STANDARDS COMMITTEE APPROVED — JAN.01.2017 DATE
DEPUTY DIRECTOR

WRONG WAY SIGNING, DELINEATION, AND MARKINGS FOR OFF-RAMPS AND DIVIDED HIGHWAYS
STANDARD DRAWING TITLE

STD. DWG. NO.
SN 2C

DGN File:L:\Standard Drawings\Imperial\2017 Approved\1-All Drawings\SN02C.dgn
28-NOV-2016

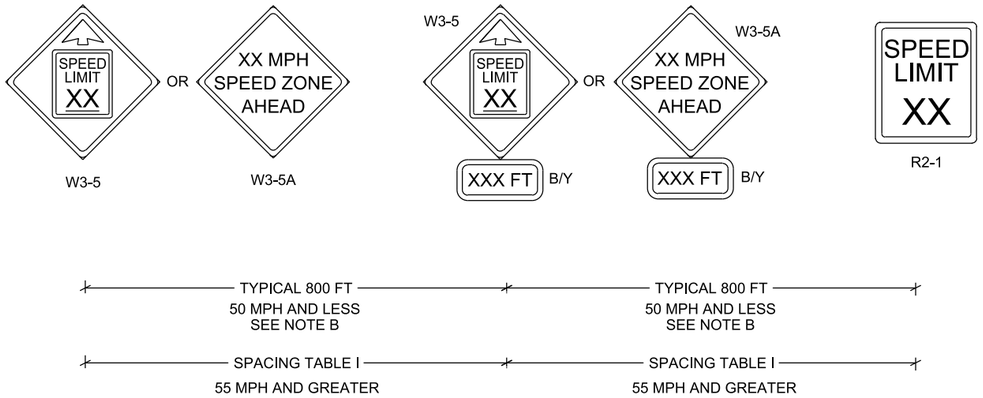

SPEED REDUCTION OF 20 MPH OR 25 MPH THREE SIGN SEQUENCE

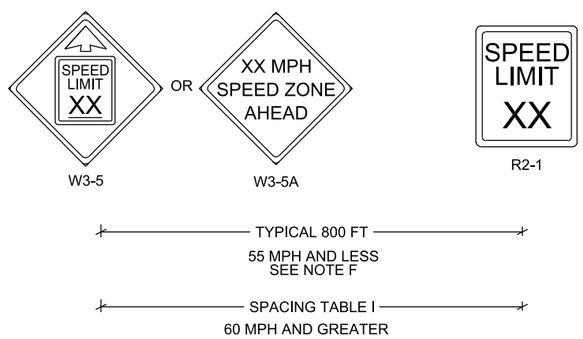

SPEED REDUCTION OF 15 MPH TWO SIGN SEQUENCE

SEE NOTE C

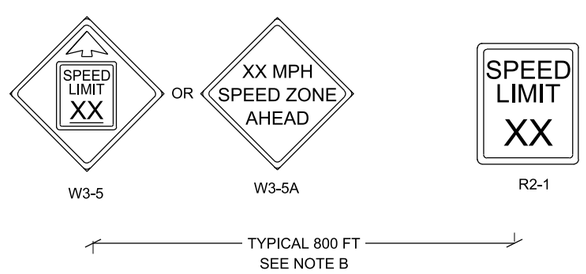

SPEED REDUCTION OF 10 MPH OR LESS (OPTIONAL) TWO SIGN SEQUENCE

APPROACH SPEED (MPH)

REDUCED SPEED (MPH)	80	75	70	65	60	55	50	45	40	35	30
75	500										
70	830	460									
65	1150	780	420								
60	1440	1070	710	380							
55	1710	1330	980	650	340						
50	1960	1580	1230	900	590	310					
45		1800	1450	1120	810	530	270				
40			1650	1320	1010	730	470	230			
35				1490	1190	910	640	410	190		
30					1340	1060	790	560	350	150	
25						1180	920	690	470	280	120
20							1030	790	580	390	220
15								870	660	470	300

MINIMUM SIGN SPACING (FT)

TABLE 1

SEE NOTES E AND F

DESIGN-ONLY NOTES:

A. USE MINIMUM R2-1 SIGN SIZE OF 36 INCHES x 48 INCHES FOR CONVENTIONAL ROADS AND EXPRESSWAYS.

USE R2-1 SIGN SIZE OF 48 INCHES x 60 INCHES FOR FREEWAYS.

USE W3-5 (OR W3-5A) SIGN SIZE OF 48 INCHES x 48 INCHES.

USE W3-5 (OR W3-5A) SIGN SIZE OF 36 INCHES x 36 INCHES FOR CONVENTIONAL ROADS.

B. USE TABLE 1 FOR OPTIONAL SIGN SPACING UPON DIRECTION OF THE REGION TRAFFIC ENGINEER.

C. USE OF THREE SIGN SEQUENCE IS OPTIONAL FOR SPEED REDUCTION OF 15 MPH.

D. DO NOT MIX W3-5 WITH W3-5A SIGNS IN THE SAME SIGNING SEQUENCE.

E. STEP SPEED LIMIT DOWN IN INCREMENTS WHEN SPEED REDUCTION IS 30 MPH OR GREATER.

F. USE SINGLE SPEED REDUCTION OF 30 MPH UPON DIRECTION OF THE REGION TRAFFIC ENGINEER. USE THREE SIGN SEQUENCE AND MINIMUM SIGN SPACING TABLE 1.

DESIGN-ONLY DRAWING

REVISIONS

NO.	DATE	APPR.	REMARKS

UTAH DEPARTMENT OF TRANSPORTATION
STANDARD DRAWINGS FOR ROAD AND BRIDGE CONSTRUCTION
SALT LAKE CITY, UTAH

RECOMMENDED FOR APPROVAL — JAN. 01, 2017 DATE
CHAIRMAN STANDARDS COMMITTEE APPROVED — JAN. 01, 2017 DATE
DEPUTY DIRECTOR

SPEED REDUCTION SIGN SEQUENCE

STANDARD DRAWING TITLE

STD. DWG. NO.
SN 3

28-NOV-2016 DGN File:L:\Standard_Drawings\Imperial\2017 Approved\1-All Drawings\SN03.dgn

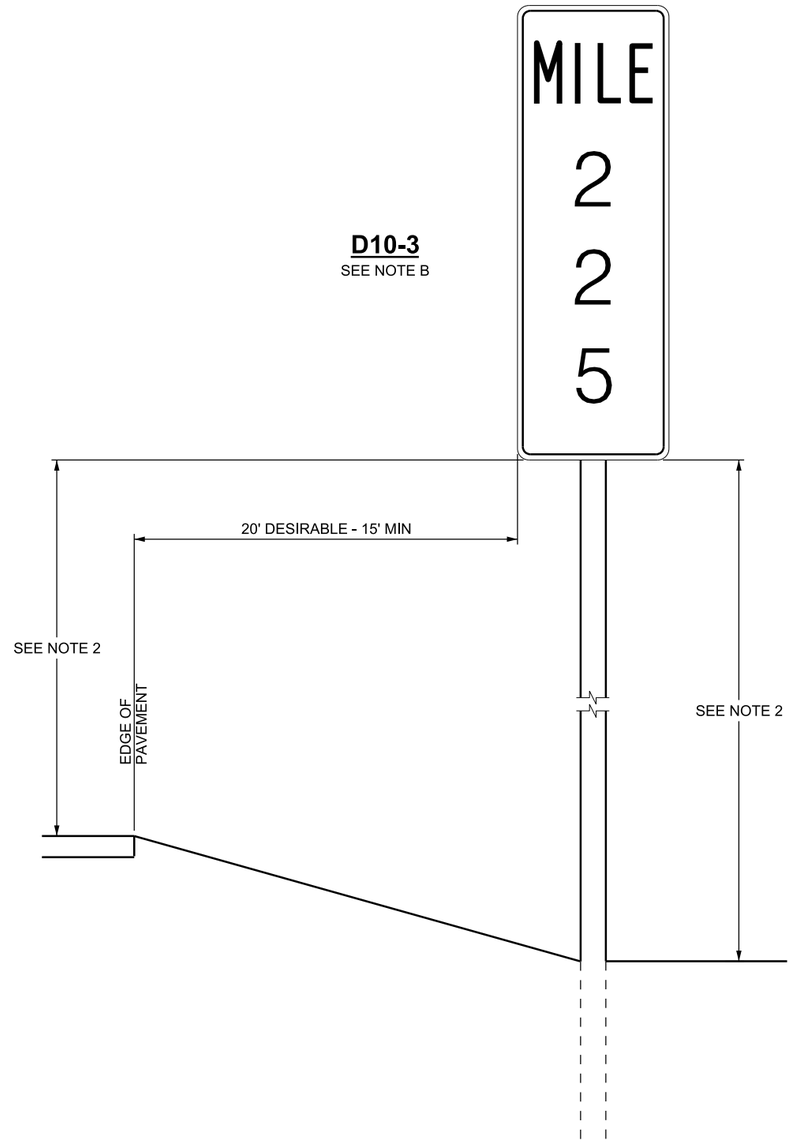

D10-3
SEE NOTE B

TYPICAL INSTALLATION
SEE NOTE 4

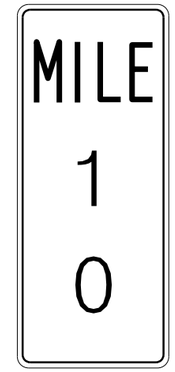

D10-2
SEE NOTE B

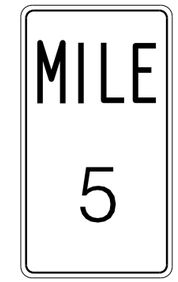

D10-1
SEE NOTE B

NOTES:

1. RETROREFLECTIVE WHITE LEGEND AND BORDER ON A RETROREFLECTIVE GREEN BACKGROUND. SEE STANDARD SPECIFICATION 02890 FOR SIGN SHEETING REQUIREMENTS.
2. DO NOT EXCEED 8 FT MOUNTING HEIGHT FROM BOTTOM OF SIGN TO THE TRAVELED WAY. MAINTAIN 4 FT MINIMUM HEIGHT ABOVE PAVEMENT EDGE. MAINTAIN 7 FT MINIMUM HEIGHT OVER PEDESTRIAN WALKWAYS.
3. SEE SN 9 SERIES STD DWGS FOR SIGN MOUNTING OPTIONS AND REQUIREMENTS.
4. SEE SN 11 AND SN 12 SERIES STD DWGS FOR SIGN BASE AND POST OPTIONS.

DESIGN-ONLY NOTES:

A. USE 12 INCH WIDE FOR FREEWAYS AND EXPRESSWAYS USE 10 INCH WIDE ON ALL OTHER HIGHWAYS.

B. SEE STANDARD HIGHWAY SIGNS AND MARKINGS FOR SIGN DESIGN DETAILS.

REVISIONS

NO.	DATE	APPR.	REMARKS

UTAH DEPARTMENT OF TRANSPORTATION
STANDARD DRAWINGS FOR ROAD AND BRIDGE CONSTRUCTION
SALT LAKE CITY, UTAH

RECOMMENDED FOR APPROVAL — JAN. 01, 2017 DATE
CHAIRMAN STANDARDS COMMITTEE APPROVED — JAN. 01, 2017 DATE
DEPUTY DIRECTOR

TYPICAL INSTALLATION FOR MILEPOST SIGNS
STANDARD DRAWING TITLE

STD. DWG. NO.
SN 4

DGN File: L:\Standard Drawings\Imperial\2017 Approved\1-All Drawings\SN04.dgn
28-NOV-2016

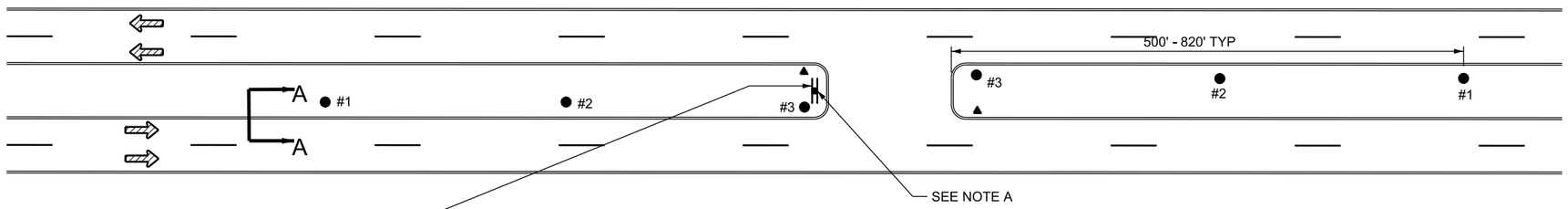

FREEWAY CROSSOVER

LEGEND

- ● FREEWAY CROSSOVER MARKER
- ▲ TYPE 2 DELINEATOR

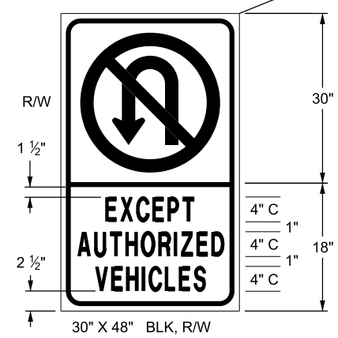

RS5-11 NO U-TURN EXCEPT AUTHORIZED VEHICLES SIGN

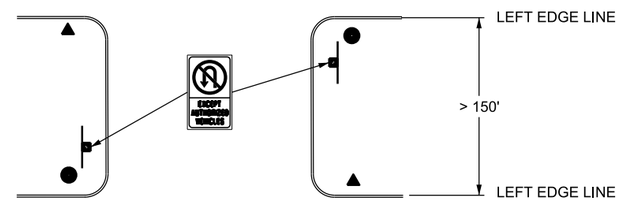

FREEWAY CROSSOVER WITH MEDIAN GREATER THAN 150'

SEE NOTE A

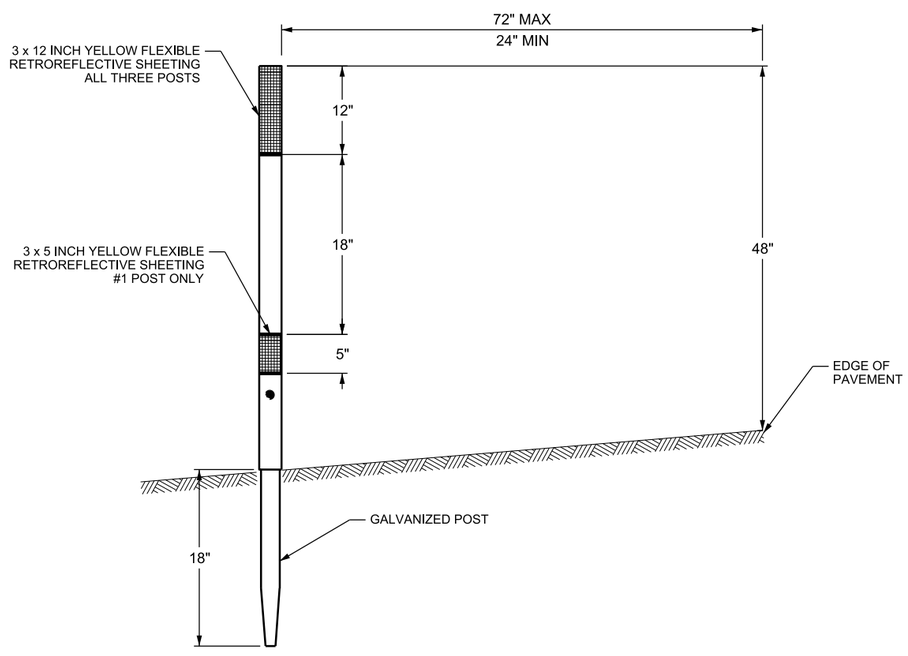

SECTION A-A

NOTES:

1. USE EXISTING DELINEATOR SPACING WHEN POSSIBLE.
   POST #2 SPACED EVENLY BETWEEN POST #1 & #3.
   POST #3 PLACED 10 FT IN ADVANCE OF POINT OF TANGENCY.
2. SEE STANDARD SPECIFICATION 02890 FOR RETROREFLECTIVE SHEETING REQUIREMENTS.
3. SEE GW SERIES STD DWGS FOR POST DETAILS.

DESIGN-ONLY NOTES:

A. USE TWO RS5-11a SIGNS BACK-TO-BACK.

B. USE A RS5-11a SIGN AT EACH END OF CROSSING ADJACENT TO APPROACHING TRAFFIC WHERE THE LEFT EDGE LINES ARE SEPARATED BY MORE THAN 150 FT.

REVISIONS

NO.	DATE	APPR.	REMARKS

UTAH DEPARTMENT OF TRANSPORTATION
STANDARD DRAWINGS FOR ROAD AND BRIDGE CONSTRUCTION
SALT LAKE CITY, UTAH

RECOMMENDED FOR APPROVAL — JAN. 01, 2017 DATE
CHAIRMAN STANDARDS COMMITTEE APPROVED — JAN. 01, 2017 DATE
DEPUTY DIRECTOR

FREEWAY CROSSOVER SIGNING
STANDARD DRAWING TITLE

STD. DWG. NO.
SN 5

DGN File:L:\Standard_Drawings\Imperial\2017 Approved\1-All Drawings\SN05.dgn
28-NOV-2016

TRAFFIC PASS RIGHT
OM3-L

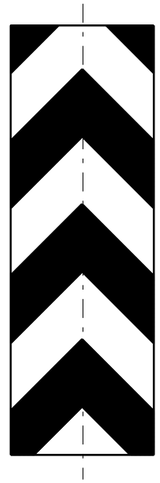

TRAFFIC PASS EITHER SIDE
OM3-C

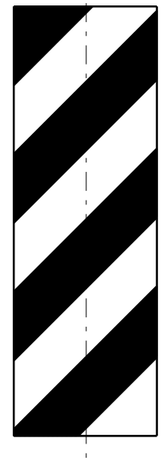

TRAFFIC PASS LEFT
OM3-R

TYPE 3 OBJECT MARKERS

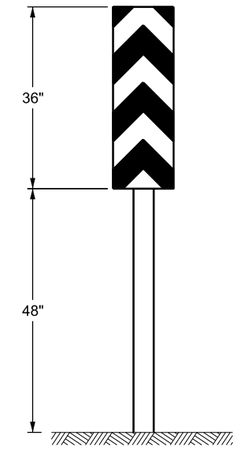

OBJECT MARKERS
MOUNTING HEIGHT DETAIL

OM3-C SHOWN (TYP)

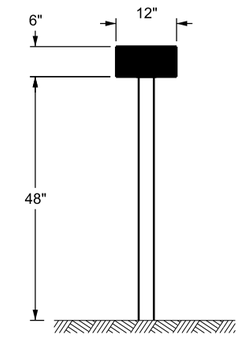

OVERPASS MARKER

OM2-2H SHOWN (TYP)

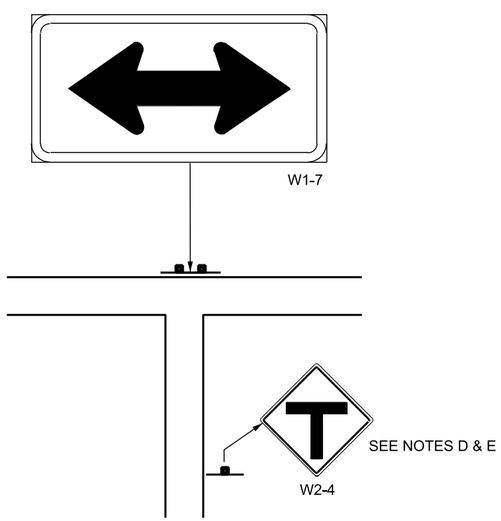

USE 96 INCH X 48 INCH FOR RURAL INTERSECTIONS
USE 72 INCH X 36 INCH FOR URBAN INTERSECTIONS
SEE STD DWG SN 14B FOR POST SPACING
SEE STD DWG SN 2A FOR SIGN MOUNTING HEIGHT

'T' INTERSECTION SIGNING

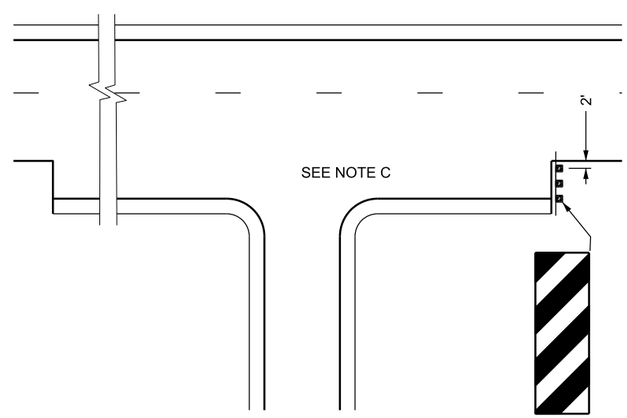

MINIMUM OF 3
OBJECT MARKERS
ON 6 FT CENTERS
(OM3-R SHOWN)

PAVEMENT TRANSITION

DESIGN-ONLY NOTES:

A. USE TYPE 3 OBJECT MARKERS TO MARK THE ENDS OF OBSTRUCTIONS SUCH AS NARROW BRIDGES AND CULVERTS. INSTALL THE MARKER ON EACH SIDE OF BOTH ENDS OF BRIDGE ON TWO-WAY ROADWAYS, AND ON EACH SIDE OF THE APPROACH END OF BRIDGE ON ONE-WAY ROADWAYS FOR NARROW BRIDGES.

B. USE TYPE 3, OBJECT MARKER TO MARK THE APPROACH TO THE ENDS OF BARRIERS THAT DO NOT HAVE A CRASH CUSHION OR END TREATMENT INSTALLED.

C. SEE ST SERIES STD DWGS FOR PAVEMENT MARKINGS AND STRIPING FOR PAVEMENT TRANSITION.

D. PLACE T-INTERSECTION SIGN (W2-4) WHEN THE INTERSECTION IS UNCONTROLLED AND WHEN THE SIGN IS USED.

E. PLACE THE APPROPRIATE ADVANCE TRAFFIC CONTROL SIGN (W3-1, W3-2 OR W3-3) WHEN USED WHEN THE INTERSECTION IS CONTROLLED BY SIGNAL, STOP, OR YIELD SIGN.

F. INSTALL OVERPASS MARKER 2 FT BEHIND PARAPET.

REVISIONS

NO.	DATE	APPR.	REMARKS

UTAH DEPARTMENT OF TRANSPORTATION
STANDARD DRAWINGS FOR ROAD AND BRIDGE CONSTRUCTION
SALT LAKE CITY, UTAH

RECOMMENDED FOR APPROVAL — JAN. 01, 2017 DATE
CHAIRMAN STANDARDS COMMITTEE
APPROVED — JAN. 01, 2017 DATE
DEPUTY DIRECTOR

OBJECT MARKERS
"T" INTERSECTION AND
PAVEMENT TRANSITION
GUIDANCE

STANDARD DRAWING TITLE

STD. DWG. NO.
SN 6

DGN File: L:\Standard Drawings\Imperial\2017 Approved\1-All Drawings\SN06.dgn
28-NOV-2016

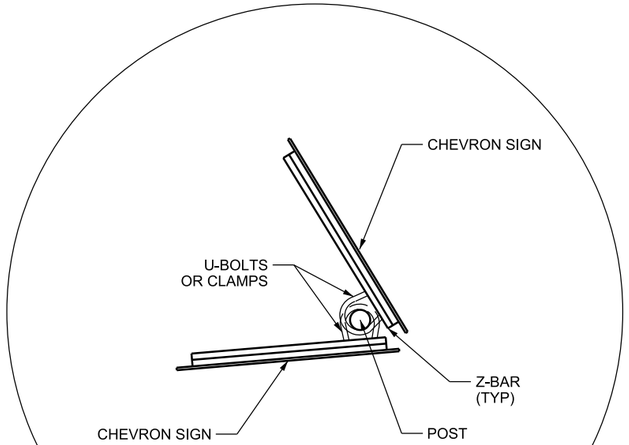

CHEVRON SIGN INSTALLATION DETAIL

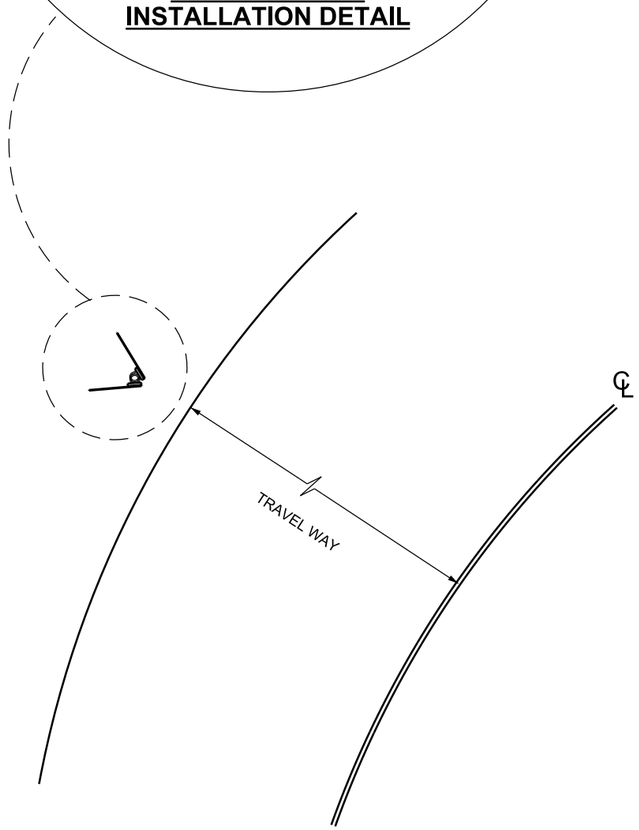

TOP VIEW

TABLE III
PLACEMENT OF Z-BAR

SIGN HEIGHT (INCHES)	A (INCHES)	B (INCHES)
18	4 ½	2 ½
24	5 ½	3 ½
30	6 ½	4 ½
36	7 ½	4 ½
48	8 ½	5 ½

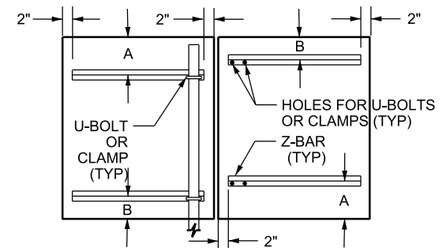

VIEW OF BACK OF SIGN PANEL

TABLE I
TYPICAL SPACING OF CHEVRON ALIGNMENT SIGNS ON HORIZONTAL CURVES

ADVISORY SPEED (MPH)	OR	CURVE RADIUS (FT)	SIGN SPACING (FT)
15 MPH OR LESS	OR	LESS THAN 200	40
25 TO 30	OR	200 TO 400	80
35 TO 45	OR	401 TO 700	120
50 TO 60	OR	701 TO 1250	160
MORE THAN 60	OR	MORE THAN 1250	200

NOTE: DO NOT USE THIS TABLE TO DETERMINE THE ADVISORY SPEED OF THE CURVE

TABLE II
DESIGN SPEED

TYPE OF HORIZONTAL ALIGNMENT SIGN	TYPE OF HORIZONTAL				
	5 MPH	10 MPH	15 MPH	20 MPH	25 MPH OR MORE
CHEVRON (W1-8) AND OR ONE DIRECTION LARGE ARROW (W1-6)	OPTIONAL	OPTIONAL	REQUIRED	REQUIRED	REQUIRED

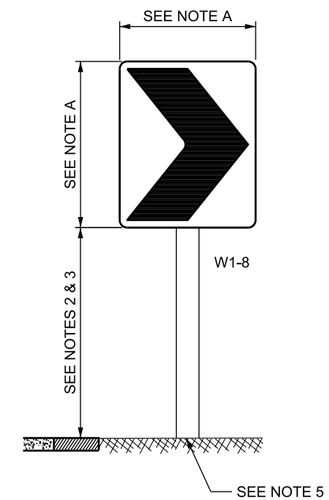

CHEVRON ALIGNMENT SIGN

NOTES:

1. USE 7 FT MIN, 7 FT 6 INCH MAX MOUNTING HEIGHT.
2. USE CONSISTENT MOUNTING HEIGHT AT EACH LOCATION.
3. SEE SN 9 SERIES STD DWGS FOR MOUNTING U-BOLTS OR CLAMP DETAILS.
4. SEE SN SERIES STD DWGS FOR POST SIZES AND BASE DETAILS.
5. SEE SN 2 SERIES STD DWGS FOR LATERAL OFFSET REQUIREMENTS.

DESIGN-ONLY NOTES:

A. USE W1-8 SIGN SIZE AS FOLLOWS:

a) CONVENTIONAL ROADS: USE 24 x 30 INCHES.
b) EXPRESSWAYS: USE 30 x 36 INCHES.
c) FREEWAYS: USE 36 x 48 INCHES.

B. USE CHEVRON ALIGNMENT (W1-8) SIGNS WHEN ADDITIONAL EMPHASIS AND GUIDANCE FOR A CHANGE IN HORIZONTAL ALIGNMENT IS NEEDED. THE W1-8 SIGN MAY BE USED TO SUPPLEMENT STANDARD DELINEATORS OR THE LARGE ARROW (W1-6) SIGN.

INSTALL THE W1-8 SIGNS ON THE OUTSIDE OF A TURN OR CURVE. INSTALL IN LINE WITH AND AT APPROXIMATELY A RIGHT ANGLE TO APPROACHING TRAFFIC.

THE APPROXIMATE SPACING OF CHEVRON ALIGNMENT SIGNS ON THE TURN OR CURVE MEASURED FROM THE POINT OF CURVATURE (PC) SHOULD BE AS SHOWN IN TABLE 1. CHEVRON ALIGNMENT SIGNS SHOULD BE VISIBLE FOR A SUFFICIENT DISTANCE TO PROVIDE THE ROAD USER WITH ADEQUATE TIME TO REACT TO THE CHANGE IN ALIGNMENT.

REVISIONS

NO.	DATE	APPR.	REMARKS

UTAH DEPARTMENT OF TRANSPORTATION
STANDARD DRAWINGS FOR ROAD AND BRIDGE CONSTRUCTION
SALT LAKE CITY, UTAH

RECOMMENDED FOR APPROVAL — JAN. 01, 2017 DATE
CHAIRMAN STANDARDS COMMITTEE APPROVED — JAN. 01, 2017 DATE
DEPUTY DIRECTOR

CHEVRON ALIGNMENT SIGNS
STANDARD DRAWING TITLE

STD. DWG. NO.
SN 7

DGN File: L:\Standard Drawings\Imperial\2017 Approved\1-All Drawings\SN07.dgn
28-NOV-2016

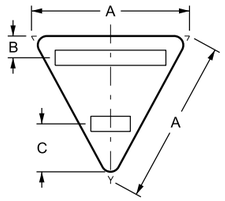

TRIANGLE SIGN

A	B	C	BAR LENGTH
36"	5"	12"	1-24" 1-10"
48"	5"	14"	1 - 36" 1 - 12"

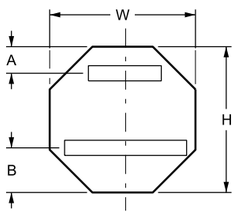

OCTAGON SIGN

H/W	A	B	BAR LENGTH
36"	8"	10"	1 - 12" 1 - 28"
48"	12"	14"	1 - 18" 1 - 40"

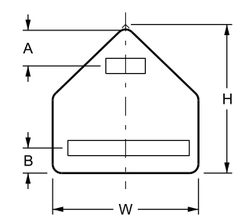

PENTAGON SIGN

H/W	A	B	BAR LENGTH
36"	10"	5"	1 - 12" 1 - 30"
48"	14"	5"	1 - 12" 1 - 42"

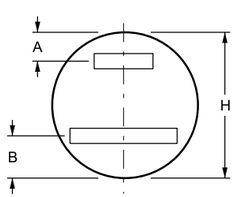

ROUND SIGN

H	A	B	BAR LENGTH
36"	8"	11"	1 - 12" 1 - 26"

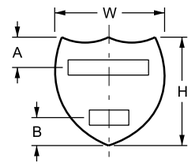

INTERSTATE SHIELD (2 DIGITS)

W	H	A	B	BAR LENGTH
36"	36"	11"	9"	1 - 30" 1 - 12"
48"	48"	14"	12"	1 - 42" 1 - 18"

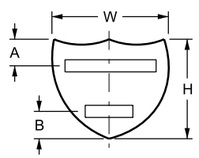

INTERSTATE SHIELD (3 DIGITS)

W	H	A	B	BAR LENGTH
45"	36"	11"	9"	1 - 38" 1 - 18"
60"	48"	14"	12"	1 - 54" 1 - 45" 1 - 18"

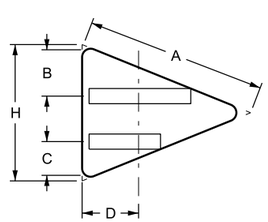

PENNANT SIGN

H	A	B	C	D	BAR LENGTH
30"	40"	10"	8"	12"	1-21" 1-16"
36"	48"	13"	10"	15"	1-27" 1-20"
48"	64"	18"	12"	20"	1-40" 1-24"

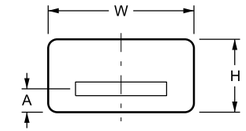

FOR SIGNS WITH H < 18"
USE 1 BAR

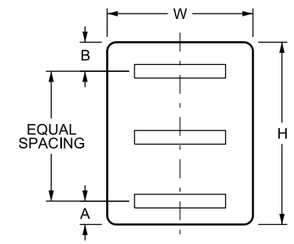

FOR SIGNS WITH 18" < H < 36"
USE 2 BARS

FOR SIGNS WITH 36" < H < 60"
USE 3 BARS

FOR SIGNS WITH H > 60"
USE 4 BARS

RECTANGULAR SIGNS

W	A	B	BAR LENGTH
12" TO 21"	5"	8"	W - 4" SEE NOTE 3
24" TO 30"	5"	8"	W - 6" SEE NOTE 3
36" TO 120"	5"	8"	W - 6"

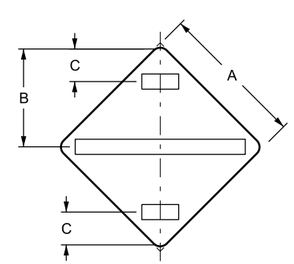

DIAMOND SIGN

A	B	C	BAR LENGTH
30"	CENTERED	9"	2 - 12" 1 - 36"
36"	CENTERED	10"	2 - 12" 1 - 43"
48"	CENTERED	12"	2 - 12" 1 - 60"
60"	CENTERED	15"	2 - 18" 1 - 77"

NOTES:

1. TYPES OF MOUNTING BAR THAT MAY BE USED:
   A. Z-BAR - REFER TO STD DWG SN 9B FOR REQUIREMENTS.
   B. LARGE CORNER ANGLE CHANNEL - REFER TO STD DWG SN 10 FOR REQUIREMENTS.
2. AFFIX MOUNTING BAR TO SIGN PANEL AS SHOWN ON SN 9 SERIES STD DWGS.
3. SIGN PANELS 30 INCHES WIDE AND LESS DO NOT REQUIRE MOUNTING BAR UNLESS PLACED ON A COMMON POST WITH OTHER SIGNS REQUIRING MOUNTING BAR. USE THE SAME STYLE OF MOUNTING BAR FOR ALL SIGNS ON A COMMON POST.
4. ADJUST MOUNTING BAR AND FASTENER PLACEMENT SLIGHTLY TO MINIMIZE IMPACT TO THE LEGEND DEPENDING ON SIGN LEGEND AND STYLE OF MOUNTING BAR USED.
5. REFER TO STD DWG SN 7 FOR BAR PLACEMENT ON SIGNS PLACED BACK-TO-BACK AT AN ANGLE.

REVISIONS

NO.	DATE	APPR.	REMARKS

UTAH DEPARTMENT OF TRANSPORTATION
STANDARD DRAWINGS FOR ROAD AND BRIDGE CONSTRUCTION
SALT LAKE CITY, UTAH

RECOMMENDED FOR APPROVAL — JAN. 01, 2017 DATE
CHAIRMAN STANDARDS COMMITTEE APPROVED — JAN. 01, 2017 DATE
DEPUTY DIRECTOR

MOUNTING BAR PLACEMENT FOR SMALL SIGNS
STANDARD DRAWING TITLE

STD. DWG. NO.
SN 8

DGN File:L:\Standard Drawings\Imperial\2017 Approved\1-011 Drawings\SN08.dgn
28-NOV-2016

ATTACHMENT TO POST WITH Z-BAR AND U-BOLT
FOR SIGN PANEL 36 INCH WIDE

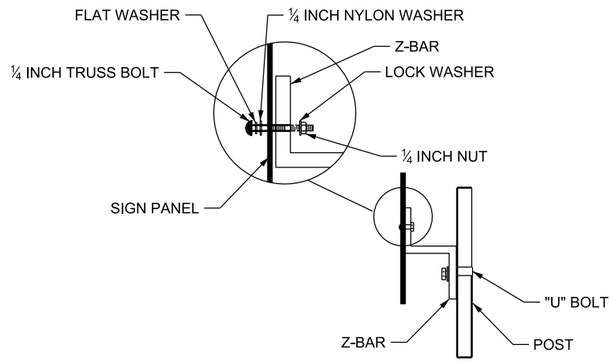

1. USE THIS INSTALLATION WHEN SIGN IS ON A SINGLE POST WITH MULTIPLE Z-BARS.
2. USE A LONG U-BOLT. REFER TO STD DWG SN 9B FOR U-BOLT REQUIREMENTS.
3. STAINLESS STEEL POP-RIVETS WITH WASHER MAY BE SUBSTITUTED FOR TRUSS BOLT.

ATTACHMENT TO POST - SINGLE Z-BAR AND DOUBLE U-BOLT
FOR SIGN PANELS WITH 24 INCH HEIGHT OR LESS

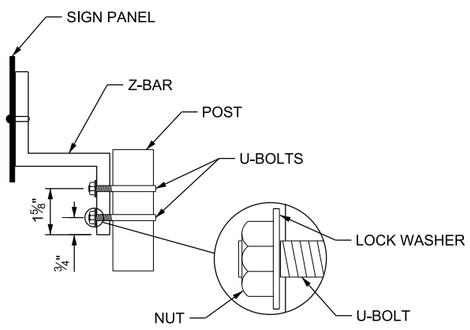

1. USE THIS INSTALLATION WHEN SIGN PANEL HAS ONLY ONE Z-BAR AND IS ATTACHED TO A SINGLE PANEL.
2. USE TWO LONG U-BOLTS. REFER TO STD DWG SN 9B FOR U-BOLT REQUIREMENTS.

ATTACHMENT TO POST WITH Z-BAR AND CLAMP
FOR DOUBLE POST APPLICATIONS

Z-BAR AND SADDLE REQUIRED WHEN SIGN IS MOUNTED ON DOUBLE POSTS.

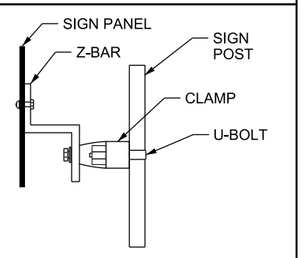

ATTACHMENT TO POST WITH CLAMP
FOR SIGN PANEL 30 INCH WIDE OR LESS

1. USE WITH P3, P4, AND P5 POSTS ON A SINGLE POST. DO NOT USE WITH MULTIPLE POSTS.
2. REFER TO STD DWG SN 9B FOR CLAMP AND HARDWARE REQUIREMENTS.

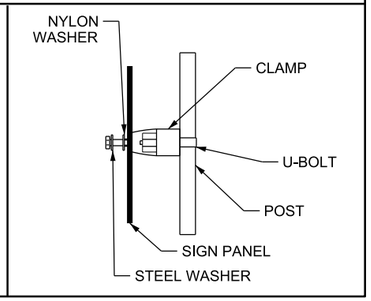

SIGN PANEL TO POST DIRECT CONNECTION
FOR SIGN PANEL 30 INCH WIDE OR LESS WITH PREPUNCHED POST

BOLT & WASHER REQUIREMENTS

1. USE WITH P1 AND P2 POSTS.
2. HARDWARE:
   - ⅜ x 3 INCH LONG BOLT
   - ⅜ INCH DIA HEX HEAD BOLT WITH NUT
   - ⅜ INCH DIA STEEL FLAT WASHER
   - ⅜ INCH DIA STEEL LOCK WASHER
   - ⅜ INCH DIA NYLON WASHER
3. GALVANIZE ALL STEEL COMPONENTS EXCEPT AS NOTED.

ASSEMBLY

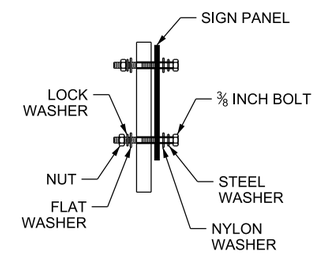

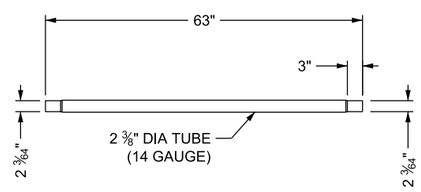

EXTENSION
SEE NOTE 4 & 7

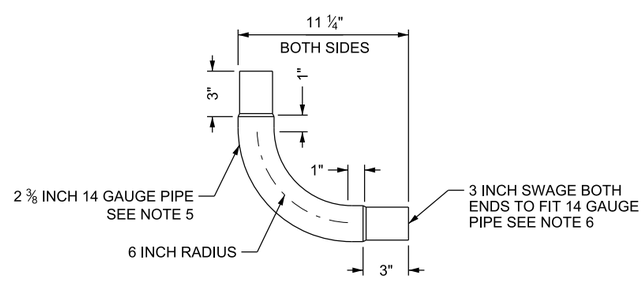

90 DEGREE POST EXTENSION
SEE NOTE 7

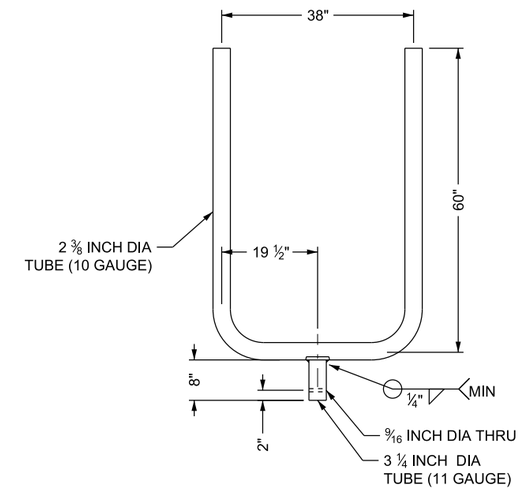

"U" BRACKET
SEE NOTE 7

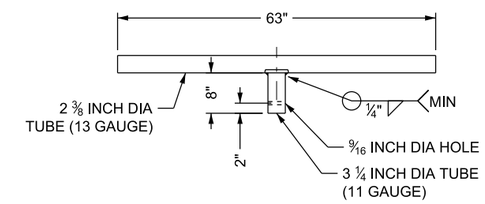

"T" BRACKET
SEE NOTE 7

NOTES:

1. GALVANIZE PIPE TO MEET ASTM A 513.
2. COAT WELD JOINTS WITH ZINC RICH PAINT.
3. CUTTING OF "T" OR "U" BRACKET OR EXTENSION TO MEET REQUIRED LENGTH OR HEIGHT IS ACCEPTABLE. COAT CUT ENDS WITH ZINC RICH PAINT.
4. SWAGE ENDS OF EXTENSION TO PROVIDE A SNUG FIT IN A 2 ⅜ INCH DIA (10 BWG) TUBING.
5. 2 ⅜ INCH DIA 14 BWG TUBING PER ASTM A 787 AWG FABRICATED FROM GALVANIZED STEEL SHEET 0.083 INCH THICK, ASTM A 653 SS GRADE G90. REMETALIZE WELD SEAM USING ZINC WIRE ACCORDING TO ASTM B 833. TUBE OD WILL BE TREATED WITH CHROMATE CONVERSION SOLUTION AND PROTECTED WITH CLEAR ACRYLIC FILM.
6. BEND 90 DEGREES AND SWAGE 3 INCH ON BOTH ENDS. SWAGE TO BE 1 INCH FROM TANGENT POINT OF BEND RADIUS TO SHOULDER OF SWAGE. SWAGE TO FIT SNUG IN 14 GAUGE PIPE.

NO.	DATE	APPR.	REMARKS

REVISIONS

UTAH DEPARTMENT OF TRANSPORTATION
STANDARD DRAWINGS FOR ROAD AND BRIDGE CONSTRUCTION
SALT LAKE CITY, UTAH

RECOMMENDED FOR APPROVAL — JAN. 01, 2017 DATE
CHAIRMAN STANDARDS COMMITTEE APPROVED — JAN. 01, 2017 DATE
DEPUTY DIRECTOR

STANDARD DRAWING TITLE
TUBULAR STEEL SIGN MOUNTING REQUIREMENTS

STD. DWG. NO.
SN 9A

DGN File:L:\Standard Drawings\Imperial\2017 Approved\1-All Drawings\SN09A.dgn
28-NOV-2016

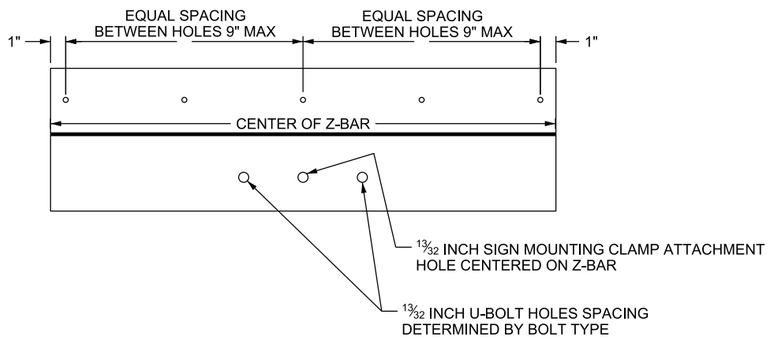

Z-BAR DETAIL

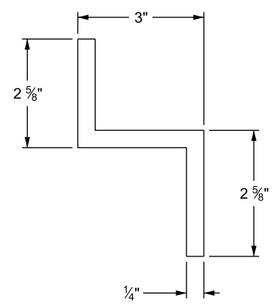

Z-BAR END VIEW

Z-BAR ASTM B 221-6061T6

DIMENSIONS FOR MOUNTING CLAMPS

POST TYPE	A	B	C	D	E	F	H	I	L	R1	R2
P1 - P2	3 3/4	2 3/4	1 1/2	1 1/8	1/2	3/16	1	2 11/16	1 7/32	1 1/4	1 3/16
P3 - P4 - P5	4 1/4	3 1/4	2	1 1/4	1/2	1/4	1	3 3/16	1 15/32	1 1/2	1 7/16

DIMENSIONS FOR STEEL CLAMP

POST TYPE	SIZE	J	K	L	M	N	GA
P1 - P2	2 3/4	4 3/16	3 3/16	4 1/4	2 7/8	1 7/8	12
P3 - P4 - P5	3 1/4	4 13/16	3 11/16	4 1/2	3 3/8	2 1/8	12

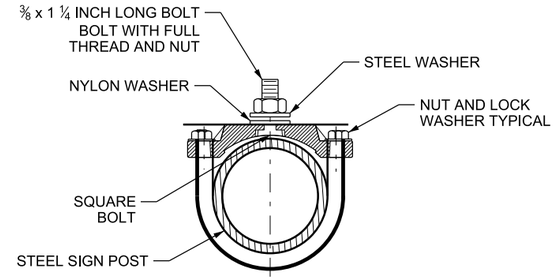

TYPICAL SINGLE BRACKET

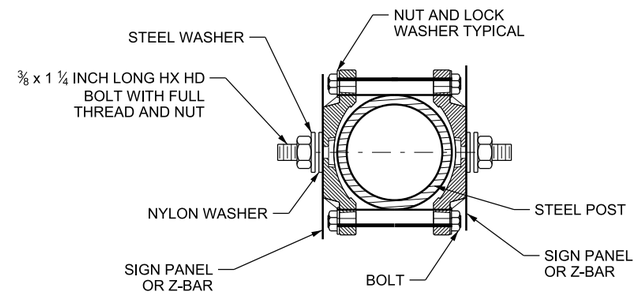

TYPICAL BACK TO BACK

P1 AND P2 BOLT LENGTH 3/8 x 4 INCH LONG
P3, P4, & P5 BOLT LENGTH 3/8 x 4 1/2 INCH LONG
WITH STEEL LOCK WASHER AND NUT

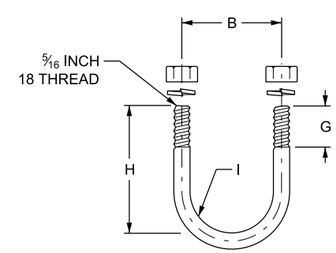

U-BOLT

USE 9/32 OR 5/16 INCH DIA U-BOLTS.

USE AMERICAN STANDARD REGULAR SEMI-FINISHED HEX NUTS AND LOCKWASHERS.

USE A U-BOLT WITH A "H" LENGTH OF 4 1/2 INCH WHEN SIGN PANEL HAS Z-BAR. MOUNT SIGN PANEL DIRECTLY TO SIGN SUPPORT. NO MOUNTING CLAMP REQUIRED.

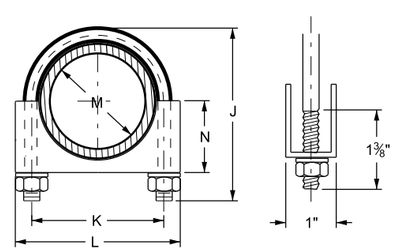

STEEL CLAMP

SIGN MOUNTING CLAMP FOR SOCKET OR SLIPBASE

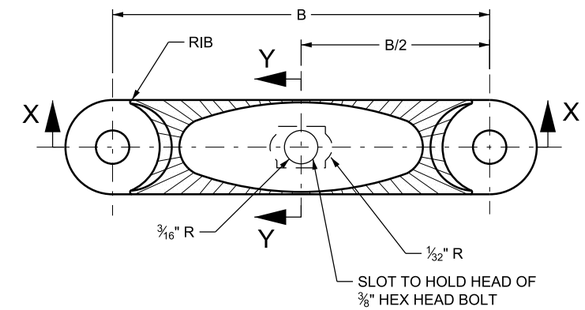

PIPE CLAMP CASTING

PIPE CLAMP CASTING: ASTM B 85
OR ALUMINUM ALLOY ANSI 360.0

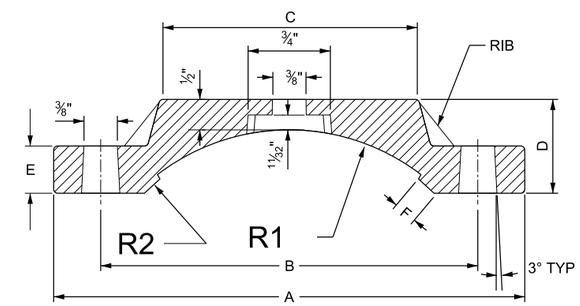

SECTION X-X

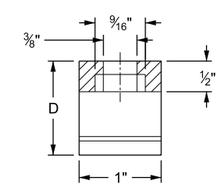

SECTION Y-Y

NOTES:

1. USE GALVANIZING CONFORMING TO ASTM A 135 FOR ALL COMPONENTS NOT MADE FROM ALUMINUM.
2. REFER TO STD DWG SN 9A FOR SIGN MOUNTING REQUIREMENTS.

REVISIONS

NO.	DATE	APPR.	REMARKS

UTAH DEPARTMENT OF TRANSPORTATION
STANDARD DRAWINGS FOR ROAD AND BRIDGE CONSTRUCTION
SALT LAKE CITY, UTAH

RECOMMENDED FOR APPROVAL — JAN. 01, 2017 DATE
CHAIRMAN STANDARDS COMMITTEE APPROVED — JAN. 01, 2017 DATE
DEPUTY DIRECTOR

TUBULAR STEEL SIGN MOUNTING HARDWARE

STANDARD DRAWING TITLE

STD. DWG. NO.
SN 9B

DGN File: L:\Standard Drawings\Imperial\2017 Approved\1-All Drawings\SN09B.dgn
28-NOV-2016

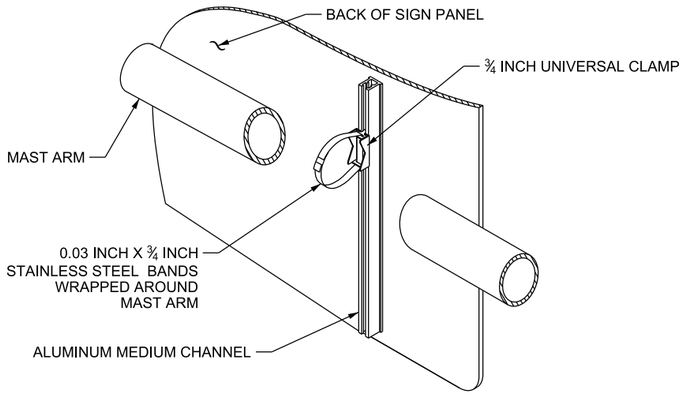

MAST ARM SIGN MOUNTING

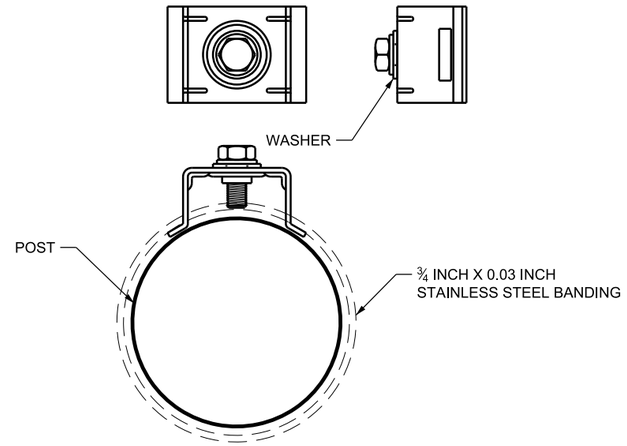

¾ INCH THREADED STRAPPING BRACKET

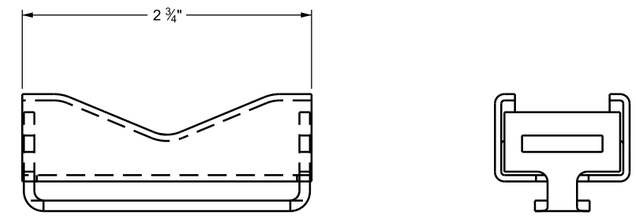

¾ INCH UNIVERSAL CLAMP

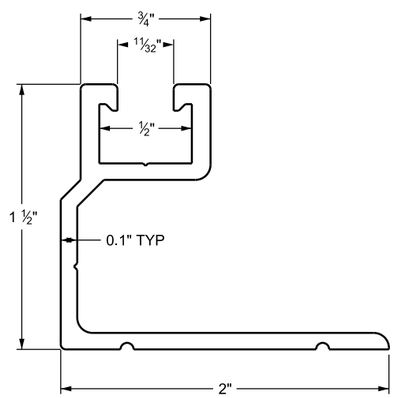

LARGE CORNER ANGLE CHANNEL

SEE NOTE 3

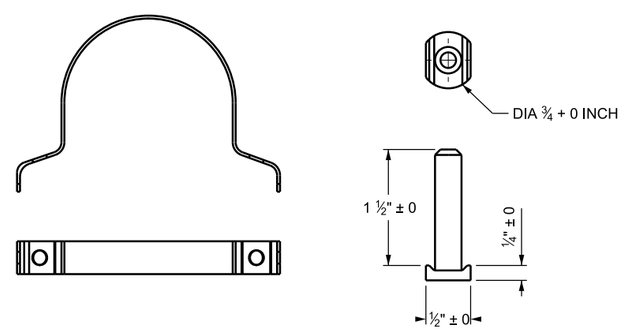

CLAMP FOR LARGE CORNER ANGLE

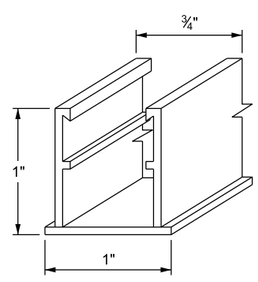

ALUMINUM MEDIUM CHANNEL

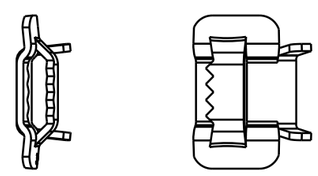

¾ INCH STRAPPING BUCKLE

NOTES:

1. USE WITH ¾ INCH STAINLESS STEEL BANDING.
2. ATTACH LARGE CORNER ANGLE TO SIGN PANEL WITH BOLTS, TAPPING SCREWS, OR POP RIVETS AS SPECIFIED. USE VHP TAPE ONLY WHEN SHOP APPLIED. NO FIELD APPLIED ADHESIVE IS ALLOWED.
3. USE Z-BAR OR LARGE CORNER ANGLE INTERCHANGEABLY AT Z-BAR LOCATIONS SHOWN ON STD DWG SN 8.
4. SEE SL SERIES STD DWGS FOR MAST ARM SIGN MOUNTING DETAILS.

NO.	DATE	APPR.	REMARKS

REVISIONS

UTAH DEPARTMENT OF TRANSPORTATION
STANDARD DRAWINGS FOR ROAD AND BRIDGE CONSTRUCTION
SALT LAKE CITY, UTAH

RECOMMENDED FOR APPROVAL — JAN. 01, 2017 DATE
CHAIRMAN STANDARDS COMMITTEE APPROVED — JAN. 01, 2017 DATE
DEPUTY DIRECTOR

STANDARD DRAWING TITLE
BANDING MOUNTING BRACKETS AND CLAMPS

STD. DWG. NO.
SN 10

28-NOV-2016 DGN File:L:\Standard_Drawings\Imperial\2017 Approved\1-All Drawings\SN10.dgn

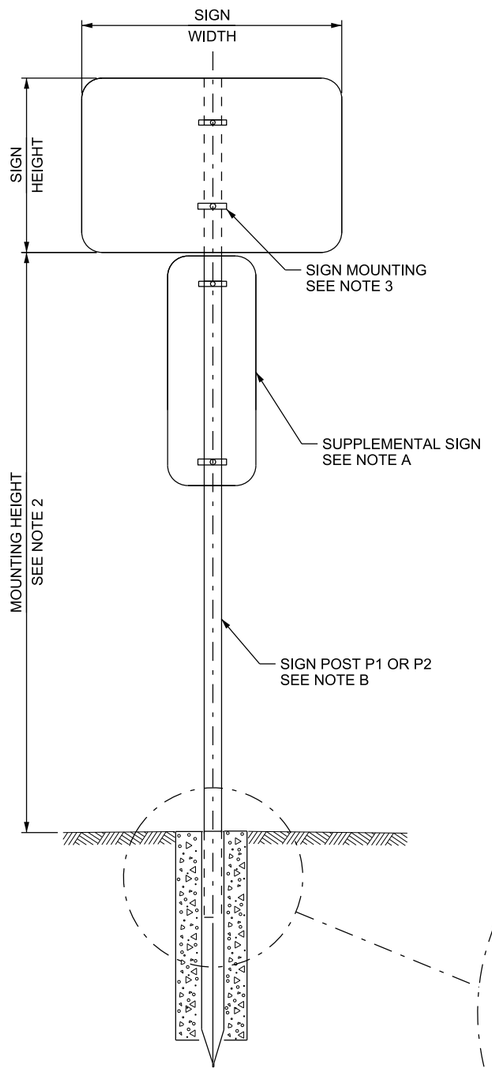

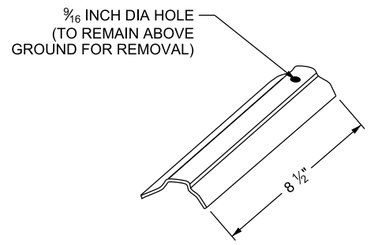

WEDGE

11 GA GALVANIZED
STEEL ASTM A 526 G-90

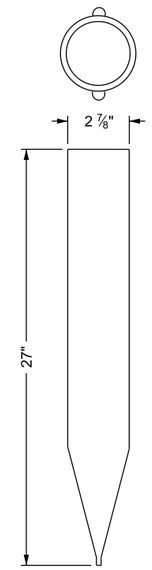

TUBULAR SOCKET

12 GA GALVANIZED
STEEL ASTM A 787

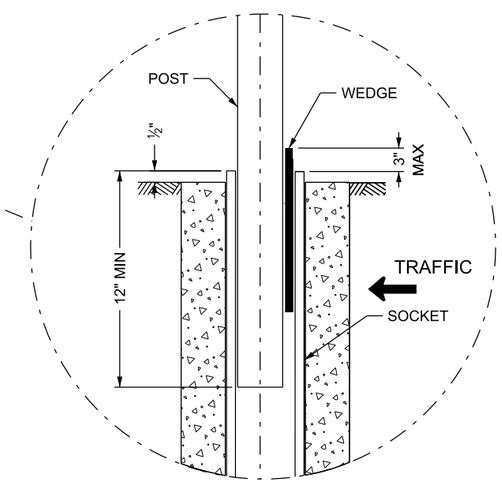

NOTE:
INSTALL WEDGE ON APPROACHING
TRAFFIC SIDE OF POST

SMALL SIGN TUBULAR STEEL POST BASE (B1)

(SOCKET SYSTEM)
(SINGLE POST APPLICATION ONLY)

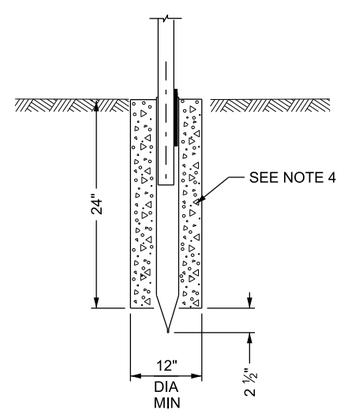

CONCRETE FOUNDATION

SEE NOTE 1

POST SELECTION GUIDE *				
	SIGN WIDTH (FT.)			
SIGN HEIGHT(FT.)	1	2	2.5	3
1	P1	P1	P1	P1
2	P1	P1	P1	P1
2.5	P1	P1	P1	P1
3	P1	P1	P1	P2
4	P1	P1	P2	P2

* POST SELECTION GUIDE ASSUMES A 7 FT MOUNTING HEIGHT FROM BOTTOM OF SIGN. INCREASE POST ONE SIZE FOR ADDITIONAL FOOT OF MOUNTING HEIGHT. MAXIMUM MOUNTING HEIGHT 8 FT. ANOTHER SIGN BASE OPTION IS REQUIRED IF MOUNTING HEIGHT REQUIREMENTS ARE GREATER.

POST SIZE DETERMINED BY BASE MANUFACTURER'S WIND LOADING REQUIREMENTS.

POST DETAIL CHART (SINGLE POST ONLY)			
POST TYPE	OUTSIDE DIAMETER	WALL THICKNESS	MATERIAL AND COATING REQUIREMENTS
P1 **	2 3/8 INCH	0.080 INCH (14 GAUGE)	ASTM A 513 GALVANIZED TO MEET AASHTO M 232
P2 **	2 3/8 INCH	0.095 INCH (13 GAUGE)	ASTM A 513 GALVANIZED TO MEET AASHTO M 232
**DO NOT USE "T" OR "U" BRACKET ON P1 OR P2 POSTS.			

NOTES:

1. CONCRETE FOUNDATION REQUIRED IN ALL INSTALLATIONS.
2. REFER TO SN 2 SERIES STD DWGS FOR MOUNTING HEIGHT AND OFFSET REQUIREMENTS.
3. REFER TO STD DWG SN 8 FOR SIGN MOUNTING REQUIREMENTS.
4. USE CONCRETE CLASS B(AE). PROJECT TOTALS REQUIRING ONE CUBIC YARD OR LESS A COMMERCIALLY AVAILABLE PRODUCT THAT MEETS OR EXCEEDS 4,000 PSI OR A CONCRETE MIX MEETING STANDARD SPECIFICATION 03055 CONCRETE CLASS B MAY BE USED. MIX BEFORE PLACING.
5. ALLOW FOR 7 DAY CURE TIME BEFORE INSTALLING SIGN POST.
6. PRE-PUNCH POST WITH 3/8 INCH HOLES, MOUNT SIGN DIRECTLY TO POST OR USE AN APPROVED MOUNTING CLAMP. SPACING OF HOLES FROM TOP IN INCHES ARE AS FOLLOWS:

   1,3,10, 16, 21, 23, 24, 27, 33, 37, 39, AND 45

DESIGN-ONLY NOTES:

A. DO NOT EXCEED MAXIMUM SQUARE FOOTAGE OF POST WHEN INSTALLING A SUPPLEMENTAL SIGN BY MORE THAN 25 PERCENT. (EX: POST P2 MAX. SIGN SIZE 3 FT W x 4 FT H =12 SQ FT + 25 PERCENT=15 SQ.FT.= (3 FT W x 4 FT H)+ (1 FT W x 3 FT H)= 15 FT)

B. USE OF YELLOW POSTS FOR LEFT SIDE (MEDIAN) INSTALLATION OR FOR LOCATIONS WITH A HIGH PROBABILITY OF BEING IMPACTED IS PERMITTED WHEN APPROVED BY REGION TRAFFIC ENGINEER.

REVISIONS			
NO.	DATE	APPR.	REMARKS

UTAH DEPARTMENT OF TRANSPORTATION
STANDARD DRAWINGS FOR ROAD AND BRIDGE CONSTRUCTION
SALT LAKE CITY, UTAH

RECOMMENDED FOR APPROVAL — JAN. 01, 2017 DATE
CHAIRMAN STANDARDS COMMITTEE APPROVED — JAN. 01, 2017 DATE
DEPUTY DIRECTOR

SMALL SIGN TUBULAR STEEL POST BASE WITH CONCRETE (B1) (SOCKET SYSTEM)
STANDARD DRAWING TITLE

STD. DWG. NO.
SN 11A

DGN File: L:\Standard_Drawings\Imperial\2017 Approved\1-All Drawings\SN11A.dgn
28-NOV-2016

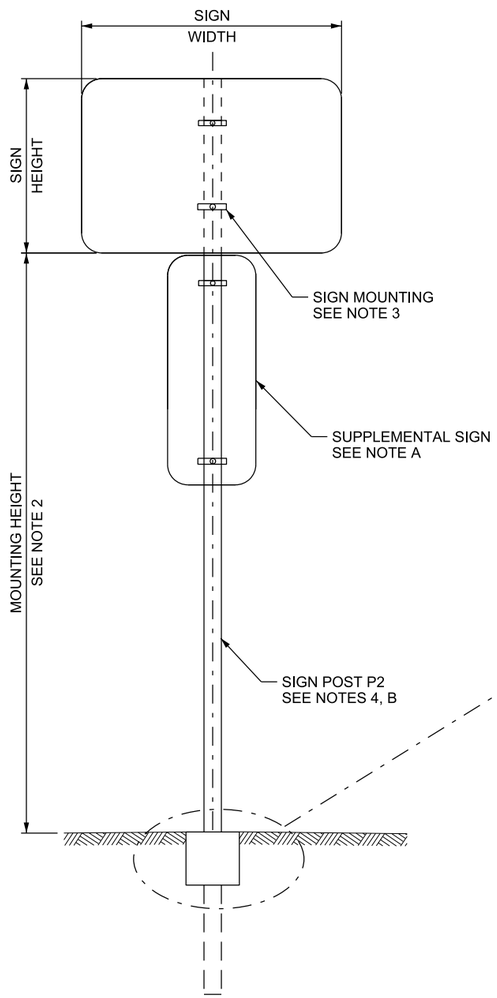

SMALL SIGN TUBULAR STEEL POST BASE (B2A)

(TRIANGULAR STEEL ANCHOR SYSTEM)
(SINGLE POST APPLICATIONS ONLY)
SEE NOTE 1

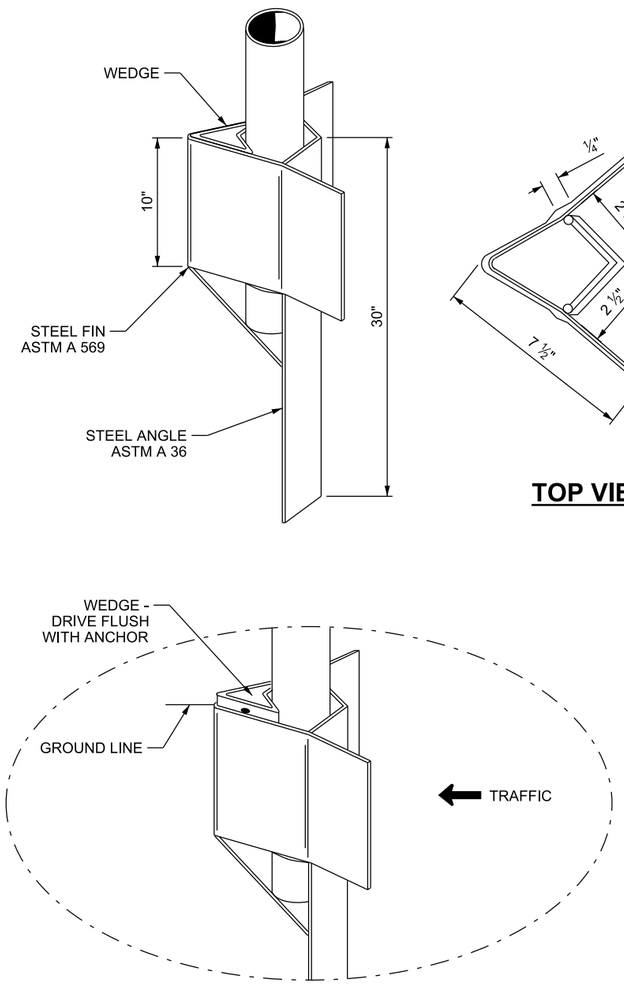

TRIANGULAR STEEL SIGN POST ANCHOR

GALVANIZE AFTER FABRICATION

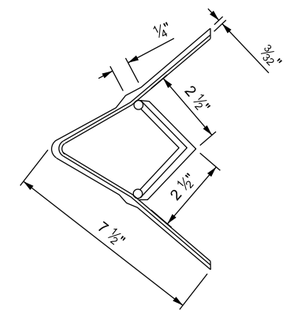

TOP VIEW

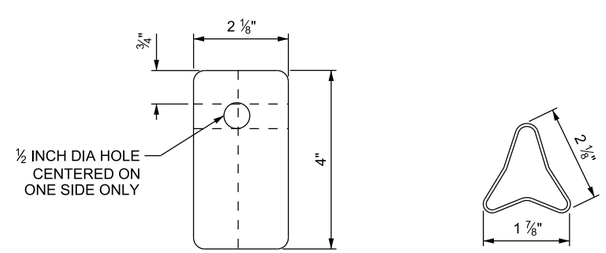

SIDE VIEW

TOP VIEW

WEDGE

POST SELECTION GUIDE *					
		SIGN WIDTH (FT.)			
		1	2	2.5	3
SIGN HEIGHT(FT.)	1	P2	P2	P2	P2
	2	P2	P2	P2	P2
	2.5	P2	P2	P2	P2
	3	P2	P2	P2	P3
	4	P2	P2	P3	P3

* POST SELECTION GUIDE ASSUMES A 7 FT MOUNTING HEIGHT FROM BOTTOM OF SIGN. MAXIMUM MOUNTING HEIGHT 8 FT. ANOTHER SIGN BASE OPTION IS REQUIRED, IF MOUNTING HEIGHT REQUIREMENTS ARE GREATER.

POST SIZE DETERMINED BY BASE MANUFACTURER'S WIND LOADING REQUIREMENTS.

POST DETAIL CHART (SINGLE POST ONLY)			
POST TYPE	OUTSIDE DIAMETER	WALL THICKNESS	MATERIAL AND COATING REQUIREMENTS
P2	2 ⅜ INCH	0.095 INCH (13 GAUGE)	ASTM A 513 GALVANIZED TO MEET ASTM AASHTO M232
P3	2 ⅞ INCH	0.134 INCH (BWG10)	ASTM A 513 GALVANIZED TO MEET ASTM AASHTO M232
DO NOT USE "T" OR "U" BRACKET			

NOTES:

1. USE TRIANGULAR POST ANCHOR IN DENSE OR STIFF SOILS ONLY. USE BASE B1 STD DWG SN 11A OR BASE B2B STD DWG SN 11C WHEN LOOSE OR SOFT SOILS ARE ENCOUNTERED.
2. REFER TO SN 2 SERIES STD DWGS FOR MOUNTING HEIGHT AND OFFSET REQUIREMENTS.
3. REFER TO STD DWG SN 8 FOR SIGN MOUNTING REQUIREMENTS.
4. DO NOT USE "T" OR "U" BRACKET WITH THIS SIGN BASE.
5. DRIVE POST ANCHOR FLUSH WITH GROUND LINE.
6. PRE-PUNCH POSTS WITH ⅜ INCH HOLES, MOUNT SIGN DIRECTLY TO POST OR USE AN APPROVED MOUNTING CLAMP. SPACING OF HOLES FROM TOP IN INCHES ARE AS FOLLOWS:

   1, 3, 10, 16, 21, 23, 24, 27, 33, 37, 39, AND 45

DESIGN-ONLY NOTES:

A. DO NOT EXCEED MAXIMUM SQUARE FOOTAGE OF POST REQUIREMENTS, WHEN INSTALLING A SUPPLEMENTAL SIGN, BY MORE THAN 25 PERCENT. (EX: POST P2 MAX SIGN SIZE 2 FT W x 4 FT H = 8 SQ FT + 25 PERCENT = 10 SQ FT = (2 FT W x 4 H) + (1 FT W x 2 FT H) = 10 SQ FT).

B. USE OF YELLOW POSTS FOR LEFT SIDE (MEDIAN) INSTALLATION OR FOR LOCATIONS WITH A HIGH PROBABILITY OF BEING IMPACTED IS PERMITTED WHEN APPROVED BY REGION TRAFFIC ENGINEER.

REVISIONS

NO.	DATE	APPR.	REMARKS

UTAH DEPARTMENT OF TRANSPORTATION
STANDARD DRAWINGS FOR ROAD AND BRIDGE CONSTRUCTION
SALT LAKE CITY, UTAH

RECOMMENDED FOR APPROVAL — JAN. 01, 2017 DATE
CHAIRMAN STANDARDS COMMITTEE APPROVED — JAN. 01, 2017 DATE
DEPUTY DIRECTOR

SMALL SIGN TUBULAR STEEL POST BASE (B2A) (TRIANGULAR STEEL ANCHOR SYSTEM)
STANDARD DRAWING TITLE

STD. DWG. NO.
SN 11B

28-NOV-2016 DGN File:L:\Standard Drawings\Imperial\2017 Approved\1-All Drawings\SN11B.dgn

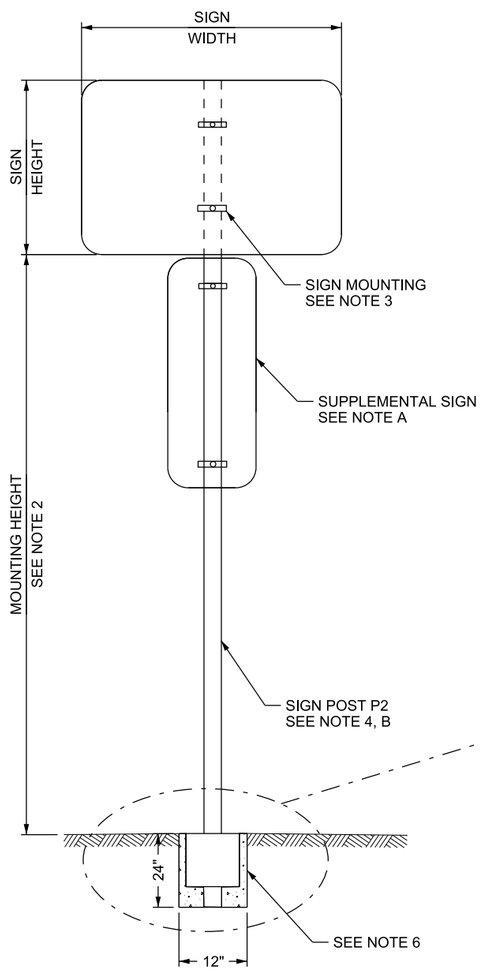

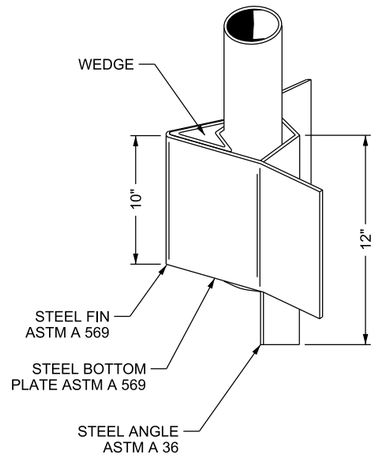

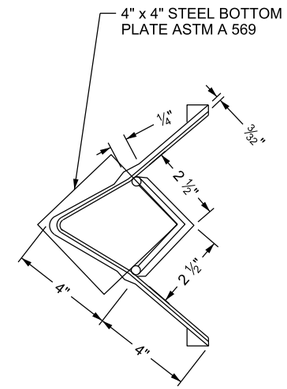

TOP VIEW

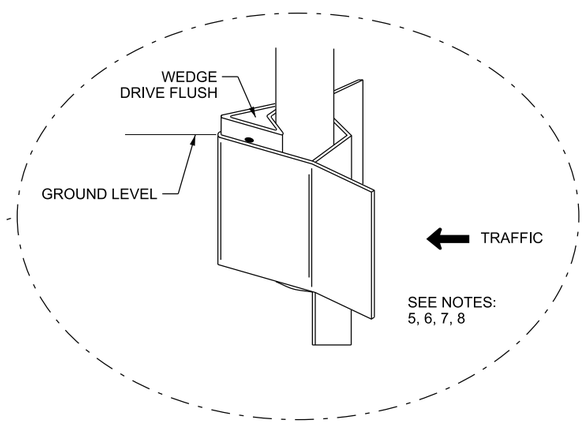

TRIANGULAR STEEL SIGN POST ANCHOR

GALVANIZE AFTER FABRICATION

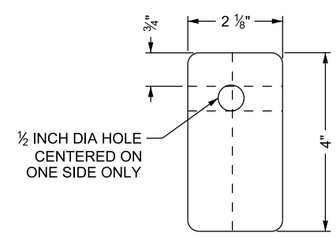

SIDE VIEW

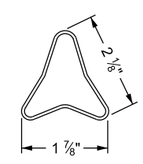

TOP VIEW

WEDGE

SMALL SIGN TUBULAR STEEL POST BASE FOR CONCRETE (B2B)

(TRIANGULAR STEEL ANCHOR SYSTEM IN CONCRETE) (SINGLE POST APPLICATION ONLY) SEE NOTE 1

POST SELECTION GUIDE *					
		SIGN WIDTH (FT.)			
		1	2	2.5	3
SIGN HEIGHT(FT.)	1	P2	P2	P2	P2
	2	P2	P2	P2	P2
	2.5	P2	P2	P2	P2
	3	P2	P2	P2	P3
	4	P2	P2	P3	P3

* POST SELECTION GUIDE ASSUMES A 7 FT MOUNTING HEIGHT FROM BOTTOM OF SIGN. MAXIMUM MOUNTING HEIGHT 8 FT. ANOTHER SIGN BASE OPTION IS REQUIRED IF MOUNTING HEIGHT REQUIREMENTS ARE GREATER.

POST SIZE DETERMINED BY BASE MANUFACTURER'S WIND LOADING REQUIREMENTS.

POST DETAIL CHART (SINGLE POST ONLY)			
POST TYPE	OUTSIDE DIAMETER	WALL THICKNESS	MATERIAL AND COATING REQUIREMENTS
P2	2 ⅜ INCH	0.095 INCH (13 GAUGE)	ASTM A 513 GALVANIZED TO MEET AASHTO M 232
P3	2 ⅞ INCH	0.134 INCH (BWG10)	ASTM A 513 GALVANIZED TO MEET AASHTO M 232
DO NOT USE "T" OR "U" BRACKET			

NOTES:

1. USE TRIANGULAR ANCHOR WITH CONCRETE IN ALL SOIL TYPES WHEN A CONCRETE BASE IS DESIRED OR PLACED IN CONJUNCTION WITH AN ISLAND OR SIDEWALK.
2. REFER TO SN 2 SERIES STD DWGS FOR MOUNTING HEIGHT AND OFFSET REQUIREMENTS.
3. REFER TO STD DWG SN 8 FOR SIGN MOUNTING REQUIREMENTS.
4. DO NOT USE "T" OR "U" BRACKET WITH THIS SIGN BASE.
5. INSTALL ANCHOR FOUNDATION AT TOP OF FINISHED GRADE. DO NOT INSTALL ANCHOR PRIOR TO COMPLETION OF FINISHED GRADE.
6. INSTALL ON ISLAND OR SIDEWALK WHEN FINISHED SURFACE IS COMPLETED. CORE DRILLING OF ISLAND OR SIDEWALK REQUIRED.
7. PLACE FOUNDATION AND POST ANCHOR FLUSH WITH FINISHED SURFACE.
8. FINISH WEDGE FLUSH WITH TOP OF ANCHOR.
9. USE CONCRETE CLASS B(AE). PROJECT TOTALS REQUIRING ONE CUBIC YARD OR LESS A COMMERCIALLY AVAILABLE PRODUCT THAT MEETS OR EXCEEDS 4,000 PSI OR A CONCRETE MIX MEETING STANDARD SPECIFICATION 03055 CONCRETE CLASS B MAY BE USED. MIX BEFORE PLACING.
10. ALLOW 7 DAY CURE TIME BEFORE INSTALLING SIGN POST.
11. PRE-PUNCH POSTS WITH ⅜ INCH HOLES, MOUNT SIGN DIRECTLY TO POST OR USE AN APPROVED MOUNTING CLAMP, SPACING OF HOLES FROM TOP IN INCHES ARE AS FOLLOWS: 1, 3, 10, 16, 21, 23, 24, 27, 33, 37, 39, AND 45

DESIGN-ONLY NOTES:

A. DO NOT EXCEED MAXIMUM SQUARE FOOTAGE OF POST REQUIREMENTS WHEN INSTALLING A SUPPLEMENTAL SIGN BY MORE THAN 25 PERCENT. (EX: POST P2 MAX. SIGN SIZE 2 FT W x 4 FT H = 8 SQ FT + 25 PERCENT = 10 SQ FT = (2 FT W x 4 FT H) + (1 FT W x 2 FT H) = 10).

B. USE OF YELLOW POSTS FOR LEFT SIDE (MEDIAN) INSTALLATION OR FOR LOCATIONS WITH A HIGH PROBABILITY OF BEING IMPACTED IS PERMITTED WHEN APPROVED BY REGION TRAFFIC ENGINEER.

NO.	DATE	APPR.	REMARKS
REVISIONS			

UTAH DEPARTMENT OF TRANSPORTATION
STANDARD DRAWINGS FOR ROAD AND BRIDGE CONSTRUCTION
SALT LAKE CITY, UTAH

RECOMMENDED FOR APPROVAL — JAN. 01, 2017 DATE
CHAIRMAN STANDARDS COMMITTEE APPROVED — JAN. 01, 2017 DATE
DEPUTY DIRECTOR

SMALL SIGN TUBULAR STEEL POST BASE WITH CONCRETE (B2B) (TRIANGULAR STEEL ANCHOR SYSTEM IN CONCRETE)
STANDARD DRAWING TITLE

STD. DWG. NO.
SN 11C

DGN File:L:\Standard Drawings\Imperial\2017 Approved\1-All Drawings\SN11C.dgn
28-NOV-2016

POST SELECTION SINGLE POST APPLICATION						
		SIGN WIDTH (FT.)				
			2	2.5	3	4	5
SIGN HEIGHT(FT.)	1					P3	P3
	2					P3	P3
	2.5					P3	P3
	3					P4	P4
	4			P3	P4	P4	P5
	5		P3	P3	P4	P4	P5
	6		P3	P3	P4	P5	P5
	7		P3	P3	P4	P5	P5
"T" OR "U" BRACKET RECOMMENDED FOR SIGNS GREATER THAN 4 FEET WIDE							

POST SELECTION DOUBLE POST APPLICATION							
		SIGN WIDTH (FT.)					
		5	6	7	8	9	10
SIGN HEIGHT(FT.)	4		P4	P4	P4	P5	P5
	5		P4	P5	P5	P5	P5
	6		P4	P5	P5	P5	P5
	7	P4	P5	P5	P5	P5	
	8	P5	P5	P5	P5		

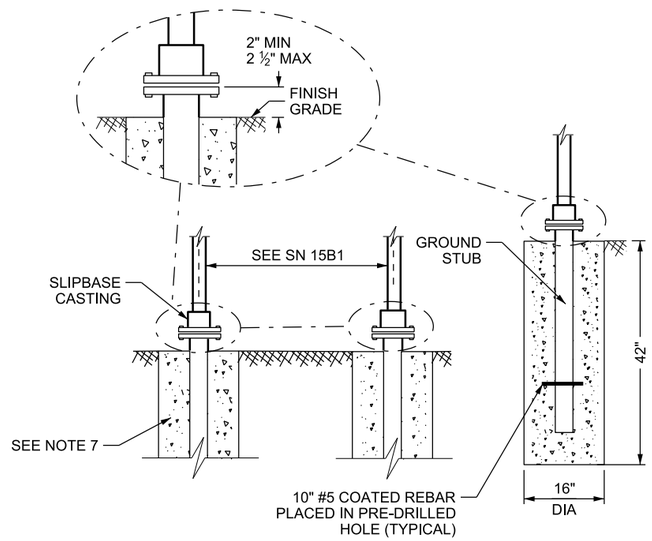

SLIPBASE GROUND STUB FOUNDATION DETAIL

APPLIES TO SINGLE AND DOUBLE POST APPLICATIONS

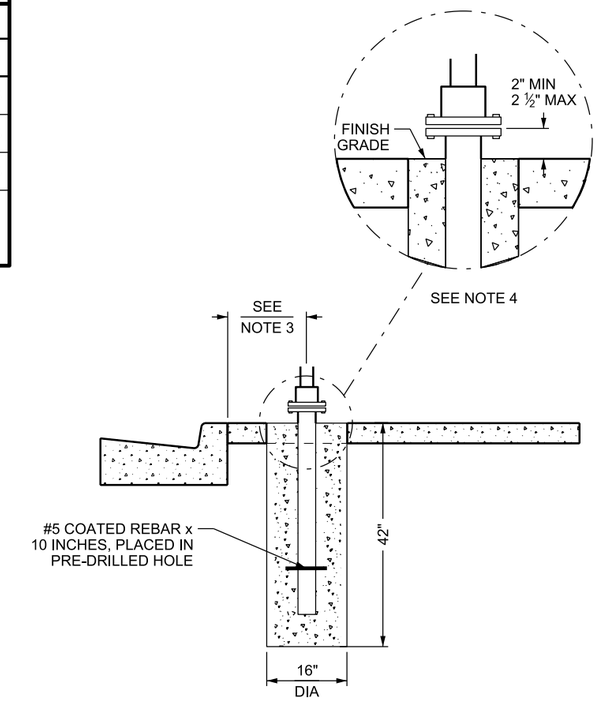

SLIPBASE DETAIL FOR SIDEWALK

NOTES:

1. REFER TO STD DWG SN 12B FOR POST REQUIREMENTS.
2. REFER TO SN 9 SERIES STD DWGS FOR MOUNTING AND HARDWARE REQUIREMENTS.
3. REFER TO SN 2 SERIES STD DWGS FOR HEIGHT AND OFFSET REQUIREMENTS.
4. CORE DRILL SLIPBASE HOLE. INSTALL SLIPBASE AFTER PLACEMENT OF FINISHED GRADE.
5. PLACE TOP OF SLIPBASE STUB FLUSH WITH TOP OF THE ISLAND, WITH A TOLERANCE OF + ⅛ INCH, FOR ISLAND INSTALLATION (DO NOT PLACE BELOW TOP OF CURB).
6. USE THE LOWER VALUE WHEN THE SIGN WIDTH OR HEIGHT FALLS BETWEEN TWO VALUES, FOR POST AND SPACING REQUIREMENTS.
7. USE CONCRETE CLASS B(AE). PROJECT TOTALS REQUIRING ONE CUBIC YARD OR LESS A COMMERCIALLY AVAILABLE PRODUCT THAT MEETS OR EXCEEDS 4,000 PSI OR A CONCRETE MIX MEETING STANDARD SPECIFICATION 03055 CONCRETE CLASS B MAY BE USED. MIX BEFORE PLACING.
8. ALLOW FOR 7 DAY CURE TIME BEFORE INSTALLING SIGN POST. PRECAST SIGN FOUNDATION MAY BE USED.
9. SEE STD DWG SN 15F FOR BREAKAWAY SUPPORT STUB HEIGHT MEASUREMENT.

DESIGN-ONLY NOTES:

A. DO NOT EXCEED MAXIMUM SQUARE FOOTAGE OF SINGLE POST APPLICATION WHEN INSTALLING A SUPPLEMENTAL SIGN BY MORE THAN 25 PERCENT. (EX: POST P5 MAX. SIGN SIZE 5 FT Wx 6 FT H = 30 SQ FT + 25 PERCENT = 37½ SQ FT = (5 FT W x 6 FT H) + (3 FT W x 2.5 FT H) = 37½).

REVISIONS

NO.	DATE	APPR.	REMARKS

UTAH DEPARTMENT OF TRANSPORTATION
STANDARD DRAWINGS FOR ROAD AND BRIDGE CONSTRUCTION
SALT LAKE CITY, UTAH

RECOMMENDED FOR APPROVAL — JAN. 01, 2017 DATE
CHAIRMAN STANDARDS COMMITTEE APPROVED — JAN. 01, 2017 DATE
DEPUTY DIRECTOR

STANDARD DRAWING TITLE: SLIPBASE SIGN BASE INSTALLATION

STD. DWG. NO. SN 12A

28-NOV-2016 DGN File: L:\Standard_Drawings\Imperial\2017 Approved\1-All Drawings\SN12A.dgn

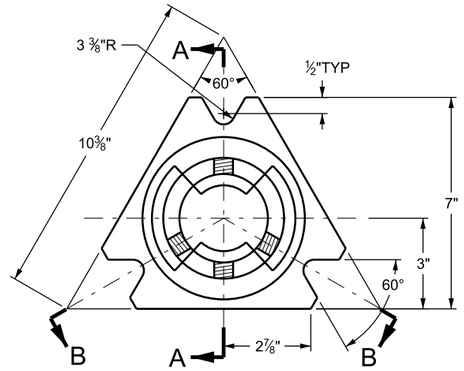

TOP VIEW

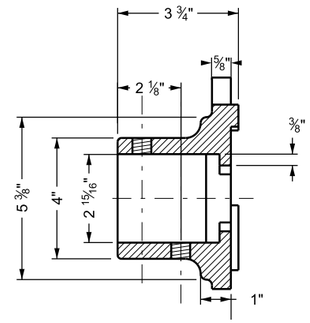

SECTION A-A

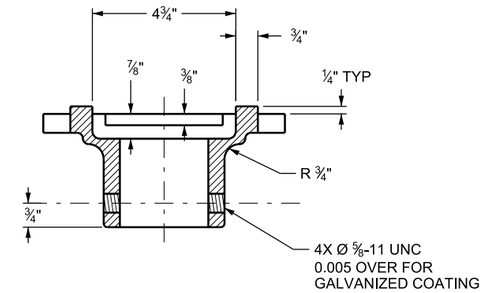

SECTION B-B

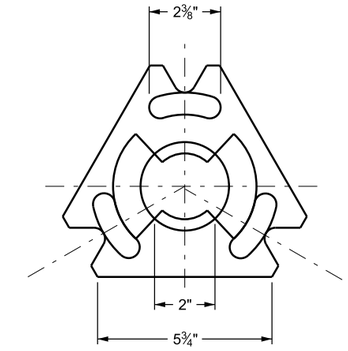

BOTTOM VIEW

SLIPBASE CASTING

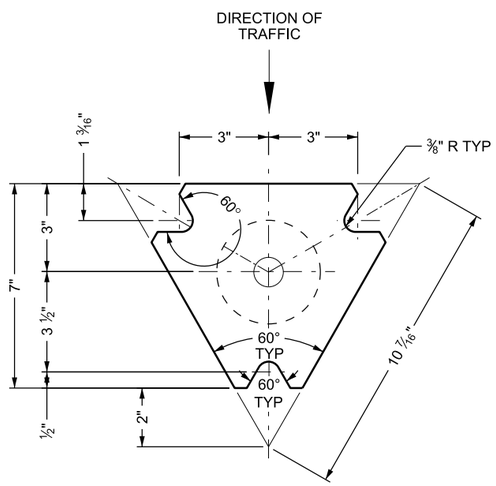

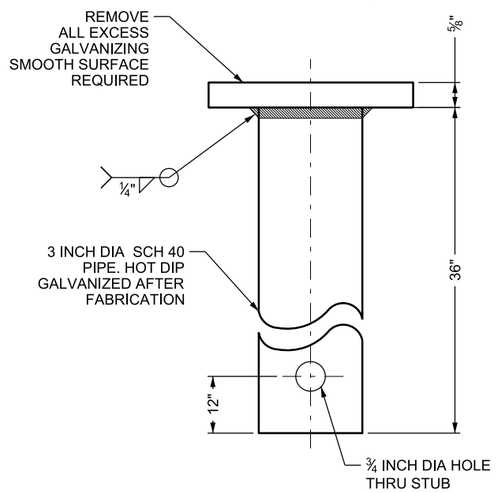

SLIPBASE GROUND STUB BASE

ASTM A 536

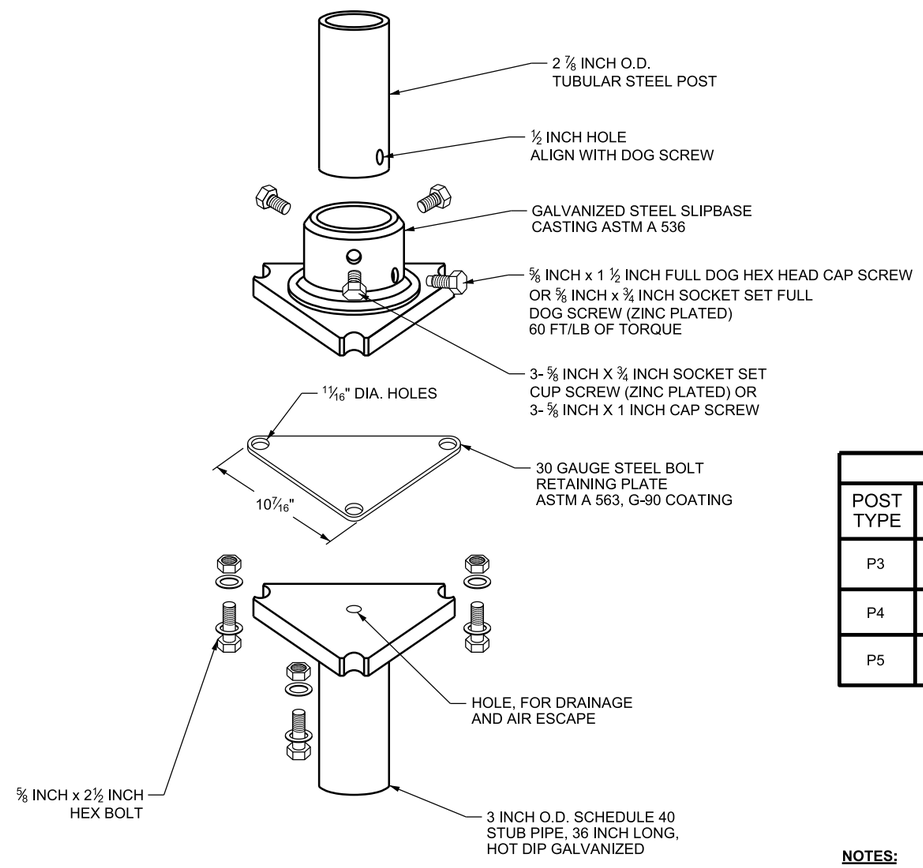

TYPICAL ASSEMBLY

POST DETAIL CHART			
POST TYPE	OUTSIDE DIAMETER	WALL GAUGE THICKNESS	MATERIAL AND COATING REQUIREMENTS
P3	2 ⅞ INCH	0.134 INCH (BWG 10)	SEE STANDARD SPECIFICATION 02891
P4	2 ⅞ INCH	0.160 INCH (NP 40)	
P5	2 ⅞ INCH	0.276 INCH (SCH 80)	

NOTES:

1. REFER TO STD DWG SN 12A FOR SLIPBASE GROUND STUB FOUNDATION DETAIL.
2. TORQUE BOLTS 40 TO 80 FT-LBS.

REVISIONS

NO.	DATE	APPR.	REMARKS

UTAH DEPARTMENT OF TRANSPORTATION
STANDARD DRAWINGS FOR ROAD AND BRIDGE CONSTRUCTION
SALT LAKE CITY, UTAH

RECOMMENDED FOR APPROVAL — JAN. 01, 2017 DATE
CHAIRMAN STANDARDS COMMITTEE APPROVED — JAN. 01, 2017 DATE
DEPUTY DIRECTOR

ROUND POST
SLIPBASE
SIGN BASE (B3)
HARDWARE

STANDARD DRAWING TITLE

STD. DWG. NO.
SN 12B

DGN File: L:\Standard Drawings\Imperial\2017 Approved\1-All Drawings\SN12B.dgn
28-NOV-2016

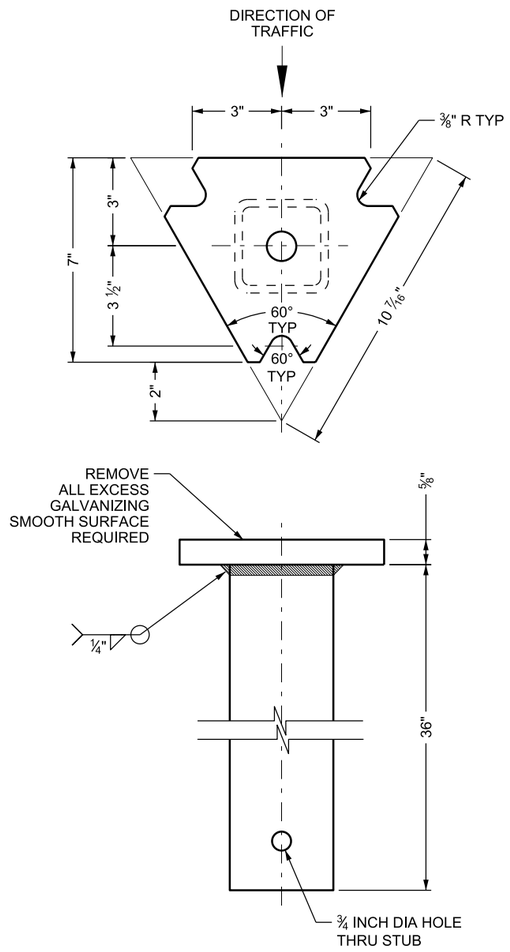

SLIPBASE GROUND STUB BASE

ASTM A 536

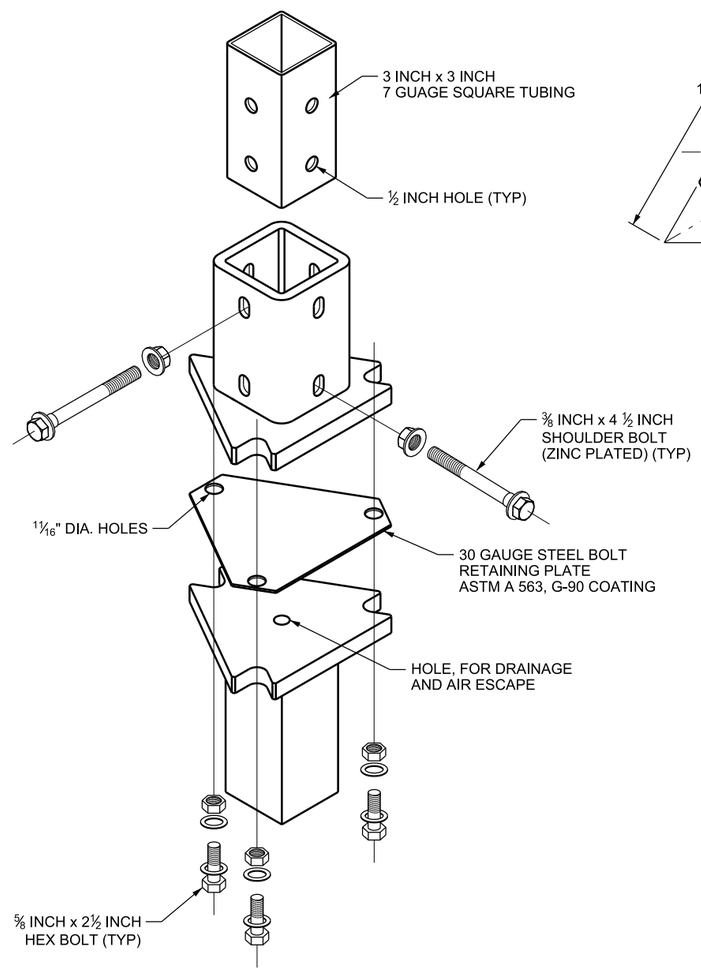

TYPICAL ASSEMBLY

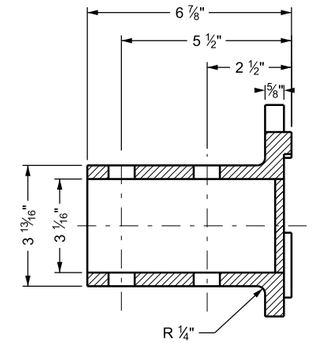

SECTION A-A

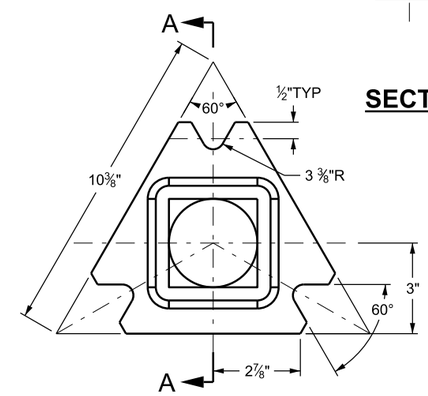

TOP VIEW

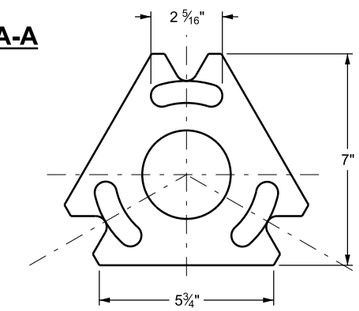

BOTTOM VIEW

SLIPBASE CASTING DETAIL

NOTES:

1. REFER TO STD DWG SN 12A FOR SLIPBASE GROUND STUB FOUNDATION DETAIL.
2. TORQUE BOLTS 40 TO 80 FT-LBS.

REVISIONS

NO.	DATE	APPR.	REMARKS

UTAH DEPARTMENT OF TRANSPORTATION
STANDARD DRAWINGS FOR ROAD AND BRIDGE CONSTRUCTION
SALT LAKE CITY, UTAH

RECOMMENDED FOR APPROVAL — JAN. 01, 2017 DATE
CHAIRMAN STANDARDS COMMITTEE — JAN. 01, 2017 DATE
APPROVED
DEPUTY DIRECTOR

SQUARE POST
SLIPBASE
SIGN BASE (B7D)
HARDWARE

STANDARD DRAWING TITLE

STD. DWG. NO.
SN 12C

DGN File: L:\Standard Drawings\Imperial\2017 Approved\1-All Drawings\SN12C.dgn
28-NOV-2016

BASE PLATE FABRICATION REQUIREMENTS:
BASE PLATE: ½ INCH ASTM A 36 PLATE STEEL
PIPE STUB: 3 INCH NOMINAL SCHEDULE 40, ASTM A 53 GBR
TOP PLATE: MEET REQUIREMENTS OF STD DWG SN 12A
GROUND STUB TOP PLATE REQUIREMENTS

MEET ASTM A 123 GALVANIZING AFTER FABRICATION IS COMPLETED.

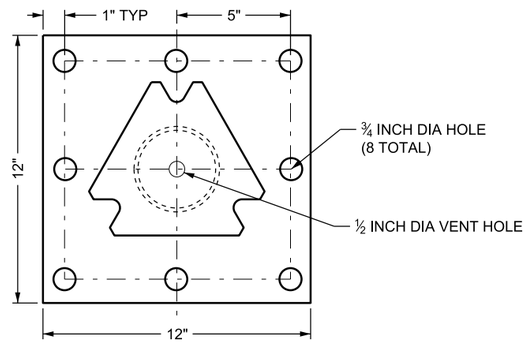

BASE PLATE DETAIL

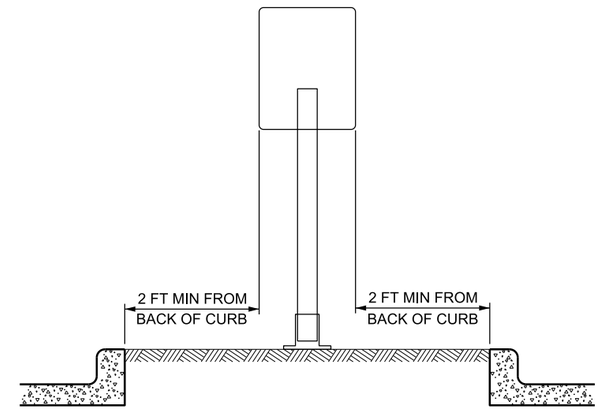

PLACEMENT DETAIL

SEE NOTE 4

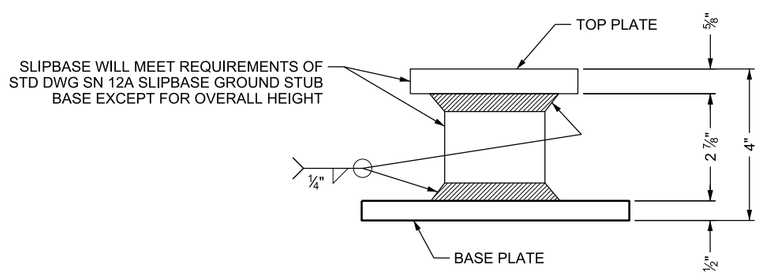

MOUNTING HARDWARE:

8- EACH ⅝ x 6 INCH MECHANICAL WEDGE ANCHORS.
8- EACH ⅝ INCH FLAT WASHERS
8- EACH ⅝ INCH LOCK WASHERS
8- EACH ⅝ INCH NUTS
ALL HARDWARE WILL BE GALVANIZED OR ZINC PLATED.

INSTALLATION REQUIREMENTS:
DRILL: (8) - ⅝ INCH HOLES 6 ½ INCH DEEP, CLEAN HOLE PRIOR TO INSTALLING ANCHORS

SLIPBASE TUBULAR STEEL SIGN BASE SURFACE MOUNT (B4A) FOR 2 ⅞ INCH POSTS (P3, P4 OR P5 POSTS)

NOTES:

1. USE P3, P4, OR P5 POST. SEE STD DWGS SN 12B AND SN 12C.
2. REFER TO STD DWG SN 12A FOR ACCEPTABLE TOP CASTING AND ASSEMBLY REQUIREMENTS.
4. REFER TO SN 2 SERIES STD DWGS FOR OFFSET NOT ADDRESSED IN PLACEMENT DETAIL AND FOR HEIGHT REQUIREMENT.
5. DO NOT INSTALL SIGN BASE ON PLOWABLE END SECTIONS.

REVISIONS

NO.	DATE	APPR.	REMARKS

UTAH DEPARTMENT OF TRANSPORTATION
STANDARD DRAWINGS FOR ROAD AND BRIDGE CONSTRUCTION
SALT LAKE CITY, UTAH

RECOMMENDED FOR APPROVAL — JAN. 01, 2017 DATE
CHAIRMAN STANDARDS COMMITTEE APPROVED — JAN. 01, 2017 DATE
DEPUTY DIRECTOR

SURFACE MOUNTED TUBULAR STEEL SIGN BASE (B4A)
STANDARD DRAWING TITLE

STD. DWG. NO.
SN 12D

28-NOV-2016 DGN File: L:\Standard Drawings\Imperial\2017 Approved\1-All Drawings\SN12D.dgn

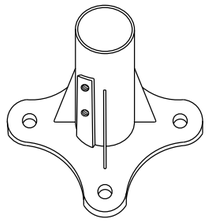

BASE CASTING

ASTM A 536 65-45-12
DUCTILE IRON
SEE NOTE 1

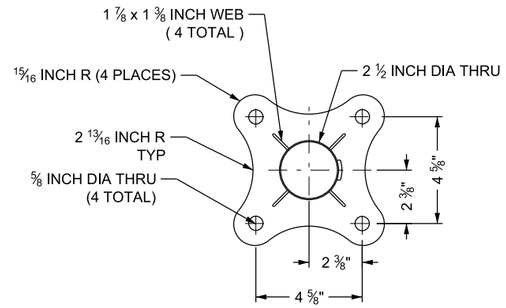

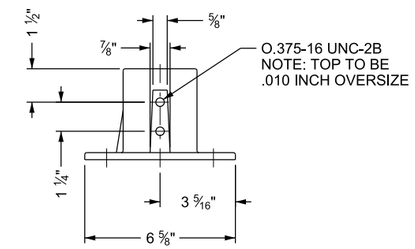

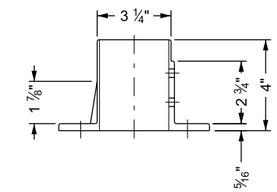

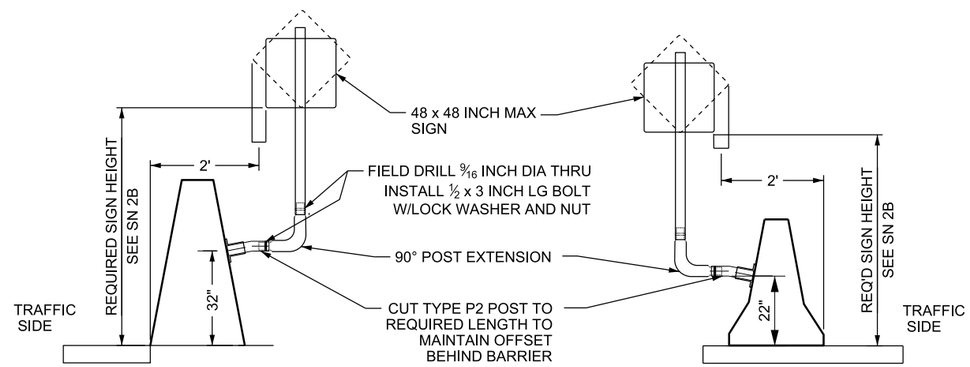

HORIZONTAL INSTALLATION NOTE: USE A 90 DEGREE POST EXTENSION WHEN MOUNTED HORIZONTALLY. REFER TO STD DWG SN 9A FOR POST EXTENSION REQUIREMENTS. FORM SIGN SUPPORT SYSTEM SO SIGN POST IS PLUMB.

HORIZONTAL INSTALLATION

MOUNTING HARDWARE:
4- EACH 1/2 x 4 INCH MECHANICAL WEDGE ANCHORS.
4- EACH 1/2 INCH FLAT WASHERS
4- EACH 1/2 INCH LOCK WASHERS
4- EACH 1/2 INCH NUTS
2- EACH BEVELED WASHERS. REQUIRED FOR HORIZONTAL MOUNTING ONLY.
ALL HARDWARE WILL BE GALVANIZED OR ZINC PLATED.

INSTALLATION REQUIREMENTS:
DRILL: 4 - 1/2 INCH HOLES 4 1/2 INCHES DEEP,
CLEAN HOLE PRIOR TO INSTALLING ANCHORS

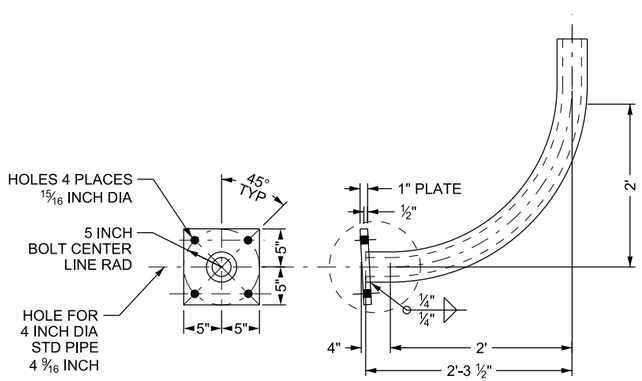

SIDE MOUNTED BARRIER POSTS

TUBULAR STEEL SIGN BASE SURFACE MOUNT (B4B)
FOR 2 3/8 INCH DIAMETER POSTS (P1 OR P2 POSTS)

NOTES:

1. USE VERTICAL BASE CASTING INSTALLATION ONLY ON ROADS WITH POSTED SPEED OF 45 MPH OR LOWER.
2. USE P1 OR P2 POST. REFER TO STD DWG SN 11A.

REVISIONS

NO.	DATE	APPR.	REMARKS

UTAH DEPARTMENT OF TRANSPORTATION
STANDARD DRAWINGS FOR ROAD AND BRIDGE CONSTRUCTION
SALT LAKE CITY, UTAH

RECOMMENDED FOR APPROVAL — JAN. 01, 2017 DATE
CHAIRMAN STANDARDS COMMITTEE APPROVED — JAN. 01, 2017 DATE
DEPUTY DIRECTOR

SIDE MOUNTED TUBULAR STEEL SIGN BASE (B4B)
STANDARD DRAWING TITLE

STD. DWG. NO.
SN 13

DGN File: L:\Standard Drawings\Imperial\2017 Approved\1-All Drawings\SN13.dgn
28-NOV-2016

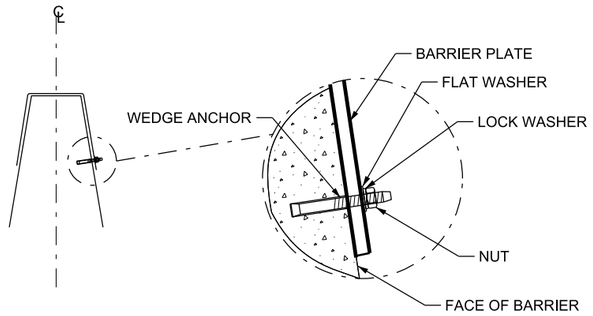

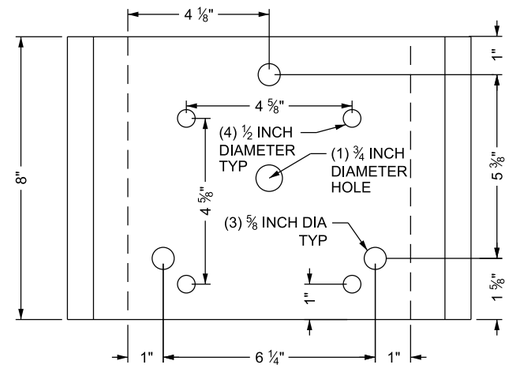

TOP VIEW

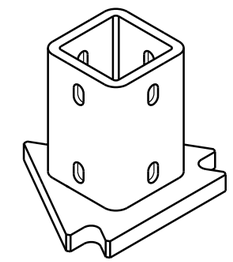

BASE B7D

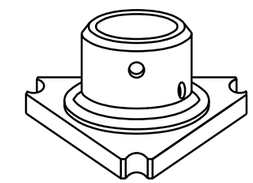

BASE B3

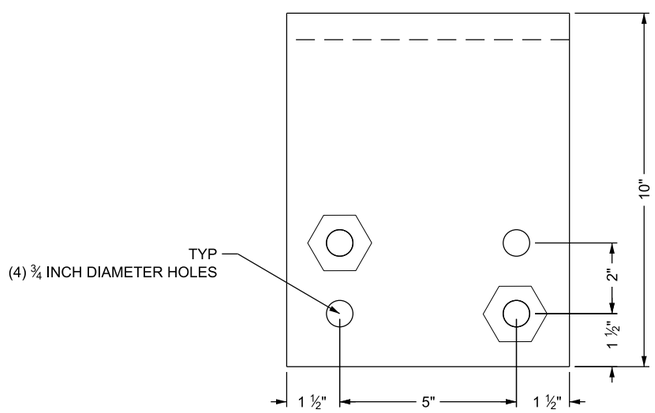

SIDE VIEW

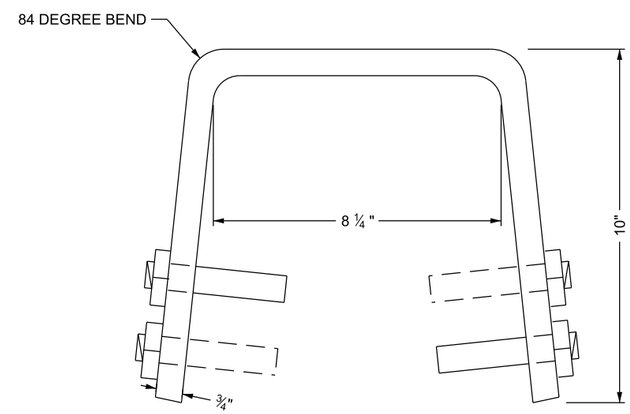

INSTALL 2 BOLTS EACH SIDE. STAGGER BOLTS SO EACH BOLT IS OPPOSITE AN EMPTY HOLE IN THE SADDLE BRACKET.

END VIEW

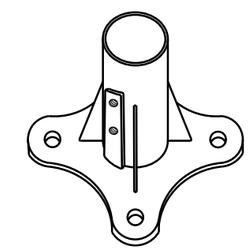

BASE B4B

CONSTANT SLOPE BARRIER PLATE TOP MOUNT DETAIL

MODIFIED SADDLE BRACKET

NOTES:

1. REFER TO STD DWG SN 8 FOR SIGN MOUNTING AND HARDWARE REQUIREMENTS.
2. REFER TO STD DWG SN 2B SIGN MOUNTING HEIGHT AND SIGN WIDTH REQUIREMENT.
3. REFER TO STD DWG SN 12A. POST LENGTH DETERMINED BY SIGN SIZE.
4. USE HOLES TAPPED 0.010 OVERSIZED FOR HOT DIP GALVANIZING.
5. USE BASE PLATE:
   ¾ INCH ASTM A 36 STEEL BEND AS PER DETAIL
   MEET ASTM A 123 GALVANIZING AFTER FABRICATION IS COMPLETED.
6. REQUIRED HARDWARE PER SIGN BASE:
   4 - ¾ x 5 ½ INCH MECHANICAL WEDGE ANCHORS HOT DIP GALVANIZED
   4 - ¾ INCH FLAT WASHERS HOT DIP GALVANIZED
   4 - ¾ INCH LOCK WASHERS HOT DIP GALVANIZED
   4 - ¾ INCH NUTS, HOT DIP GALVANIZED
7. DRILL (4) - ¾ INCH DIA HOLES 5 INCH DEEP, CLEAN HOLE PRIOR TO INSTALLING ANCHORS.
8. EXPOSE NO MORE THAN ½ INCH OF THREAD BEYOND NUT AFTER NUT IS TIGHTENED. DO NOT FLAME CUT WEDGE ANCHORS.
9. USE WITH B3, B7D, AND B4B BASES.

DESIGN-ONLY NOTES:

A. USE FOR SIGNS 20 SQ FT OR LESS.

REVISIONS

NO.	DATE	APPR.	REMARKS

UTAH DEPARTMENT OF TRANSPORTATION
STANDARD DRAWINGS FOR ROAD AND BRIDGE CONSTRUCTION
SALT LAKE CITY, UTAH

RECOMMENDED FOR APPROVAL — JAN. 01, 2017 DATE
CHAIRMAN STANDARDS COMMITTEE APPROVED — JAN. 01, 2017 DATE
DEPUTY DIRECTOR

STANDARD DRAWING TITLE
BARRIER MOUNTED TUBULAR STEEL SIGN BASES 20 SQ FT OR LESS

STD. DWG. NO.
SN 14A

DGN File: L:\Standard Drawings\Imperial\2017 Approved\1-All Drawings\SN14A.dgn
28-NOV-2016

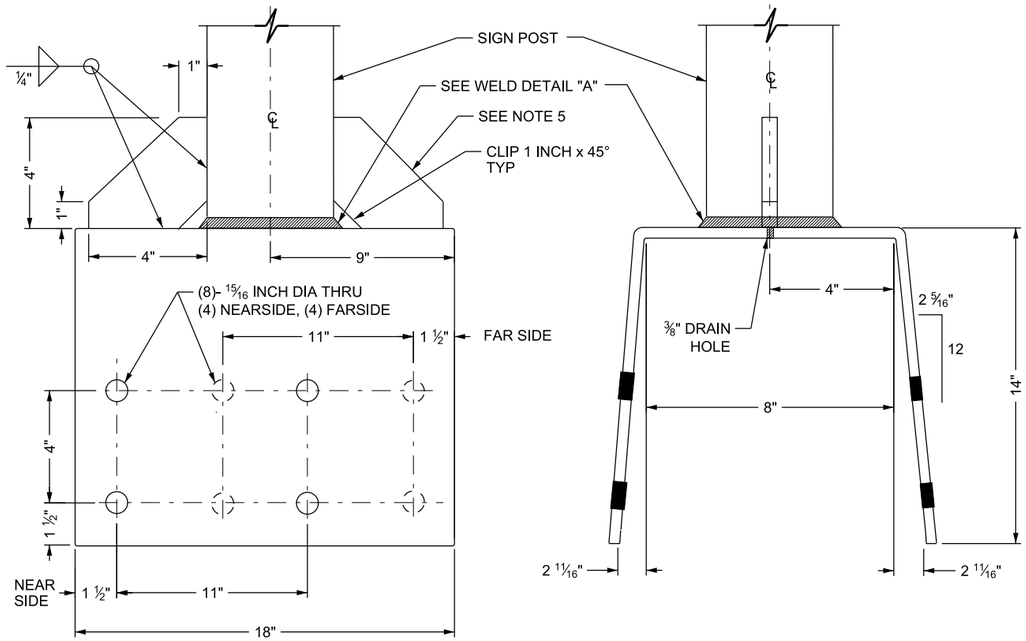

CONSTANT SLOPE BARRIER PLATE DETAIL

CONSTANT SLOPE BARRIER TOP MOUNT 4 INCH TUBULAR STEEL SIGN BASE (B5A)

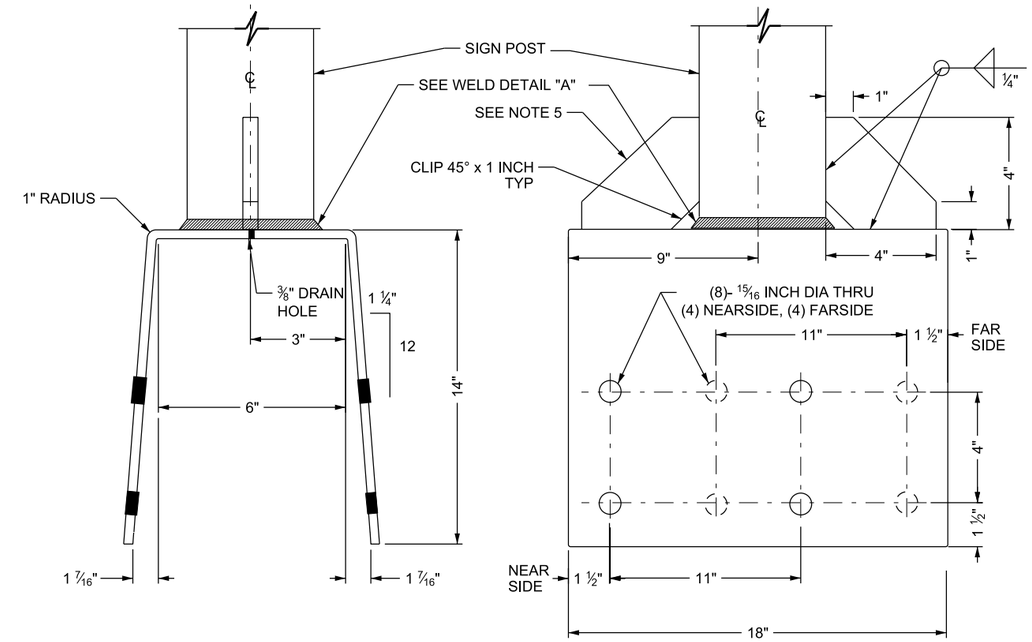

JERSEY SHAPE BARRIER PLATE DETAIL

JERSEY SHAPE BARRIER TOP MOUNT 4 INCH TUBULAR STEEL SIGN BASE(B5B)

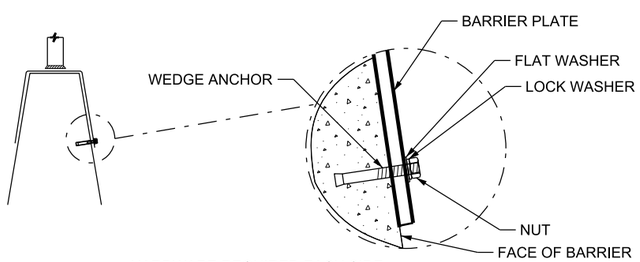

HARDWARE REQUIRED EACH SIDE:

4 - ¾ x 5 ½ INCH MECHANICAL WEDGE ANCHORS HOT DIPPED GALVANIZED

4 - ¾ INCH FLAT WASHERS HOT DIPPED GALVANIZED

4 - ¾ INCH LOCK WASHERS HOT DIPPED GALVANIZED

4 - ¾ INCH NUTS, HOT DIPPED GALVANIZED

INSTALLATION:

DRILL (4) - ¾ INCH DIA HOLES 5 INCH DEEP, CLEAN HOLE PRIOR TO INSTALLING ANCHORS

NO MORE THAN ½ INCH OF THREAD TO BE EXPOSED BEYOND NUT AFTER NUT IS TIGHTENED. DO NOT FLAME CUT WEDGE ANCHORS

MOUNTING AND INSTALLATION FOR CONSTANT SLOPE AND STANDARD SECTION

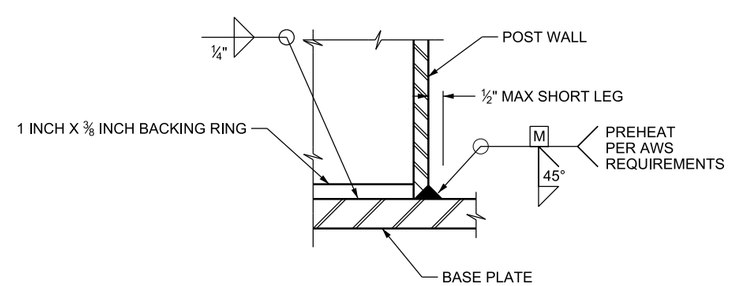

WELD DETAIL "A"

BARRIER PLATE FABRICATION REQUIREMENTS:

BASE PLATE: ¾ INCH ASTM A 36 STEEL. BEND AS PER DETAIL
SIGN POST: 4 INCH NOMINAL SCHEDULE 80 MEETING ONE OF THE FOLLOWING ASTM GRADES: ASTM A 53 Gr B,
ASTM A 500 Gr B
ASTM API 5L Gr B / X42,
MEET ASTM A 123 GALVANIZING AFTER FABRICATION IS COMPLETED.

GENERAL NOTES:

1. REFER TO STD DWG SN 8 FOR SIGN MOUNTING AND HARDWARE REQUIREMENTS.
2. REFER TO STD DWG SN 2B FOR SIGN MOUNTING AND SIGN WIDTH REQUIREMENT.
3. POST LENGTH DETERMINED BY SIGN SIZE.
4. USE 36 SQ FT MAXIMUM SIGN PANEL AREA.
5. USE ½ INCH STIFFERNER PLATES FOR SIGN PANEL AREA GREATER THAN 27 SQ FT.
6. ALL WELDING TO COMPLY WITH AWS STD D1.1.
7. LEADING EDGE SHOULD BE FLUSH WITH BARRIER.

REVISIONS

NO.	DATE	APPR.	REMARKS

UTAH DEPARTMENT OF TRANSPORTATION
STANDARD DRAWINGS FOR ROAD AND BRIDGE CONSTRUCTION
SALT LAKE CITY, UTAH

RECOMMENDED FOR APPROVAL — JAN. 01, 2017 DATE
CHAIRMAN STANDARDS COMMITTEE APPROVED — JAN. 01, 2017 DATE
DEPUTY DIRECTOR

BARRIER MOUNTED TUBULAR STEEL SIGN BASES (B5A AND B5B)

STANDARD DRAWING TITLE

STD. DWG. NO.
SN 14B

28-NOV-2016 DGN File:L:\Standard Drawings\Imperial\2017 Approved\1-All Drawings\SN14B.dgn

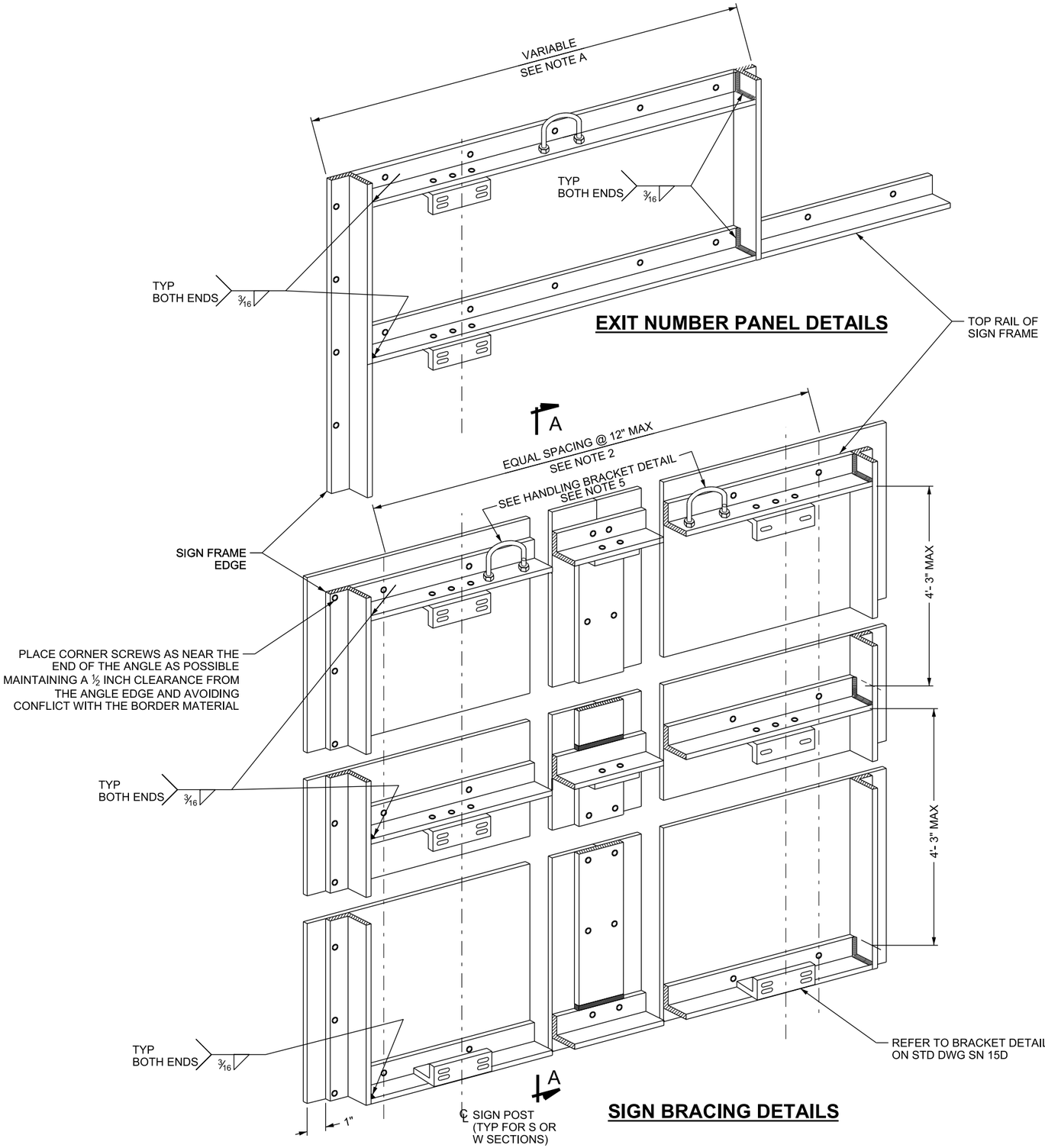

EXIT NUMBER PANEL DETAILS

SIGN BRACING DETAILS

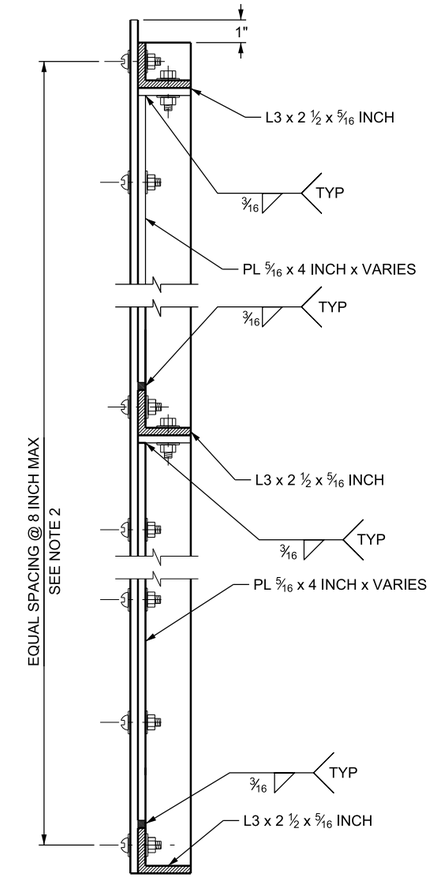

SECTION A-A

NOTES:

1. REFER TO STD DWG SN 15B1 FOR GENERAL NOTES.
2. USE ¼ INCH STAINLESS STEEL FASTENERS WITH A NYLON WASHER AND A STAINLESS STEEL WASHER. FASTENERS MAY BE EITHER 18-8 ROUND HEAD MACHINE SCREWS THAT CONFORM TO ASTM A 314, CLASS 304 WITH A STAINLESS NUT OR POP-RIVETS THAT CONFORM TO ASTM A 502, GRADE 1.
3. USE GALVANIZED HARDWARE EXCEPT AS NOTED.
4. GALVANIZE FRAME TO MEET AASHTO M 111 (ASTM A 123).
5. REFER TO STD DWG SN 15D FOR SIGN FRAME BRACKET DETAILS.
6. BUILD BOTTOM OF SIGNS WITH SUBSTRATE FLUSH WITH THE FRAME. BUILD SIDES AND TOP OF SIGN WITH UP TO 1 INCH OVERHANG FROM FRAME.
7. THIS DRAWING DOES NOT APPLY TO OVERHEAD SIGNS.

DESIGN- ONLY NOTES:

A. DESIGN EXIT NUMBER PANEL WIDTH FOR EACH SIGN.

B. USE AN EXIT NUMBER PANEL WIDTH EQUAL TO THE SIGN PANEL WIDTH WHEN THE WIDTH DIFFERENTIAL IS 1 FT- 6 INCHES OR LESS.

REVISIONS

NO.	DATE	APPR.	REMARKS

UTAH DEPARTMENT OF TRANSPORTATION
STANDARD DRAWINGS FOR ROAD AND BRIDGE CONSTRUCTION
SALT LAKE CITY, UTAH

RECOMMENDED FOR APPROVAL — JAN. 01, 2017 DATE
CHAIRMAN STANDARDS COMMITTEE APPROVED — JAN. 01, 2017 DATE
DEPUTY DIRECTOR

GROUND MOUNT SIGN FRAME FABRICATION DETAILS

STANDARD DRAWING TITLE

STD. DWG. NO.
SN 15A

28-NOV-2016 DGN File: L:\Standard Drawings\Imperial\2017 Approved\1-All Drawings\SN15A.dgn

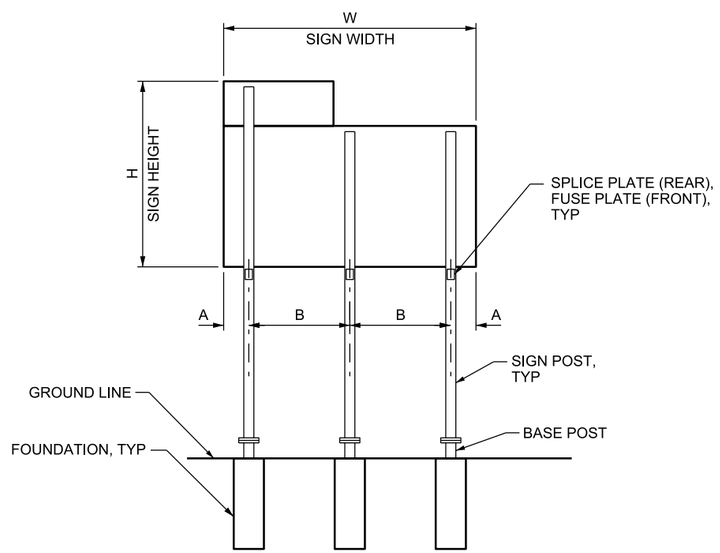

TYPICAL ELEVATION

TWO POSTS		
SIGN WIDTH, W	POST SPACING	
	A	B
6 FT	1'- 0"	4'- 0"
7 FT	1'- 0"	5'- 0"
8 FT	1'- 0"	6'- 0"
9 FT	1'- 0"	7'- 0"
10 FT	1'- 0"	8'- 0"
11 FT	1'- 6"	8'- 0"
12 FT	2'- 0"	8'- 0"
13 FT	2'- 6"	8'- 0"
14 FT	3'- 0"	8'- 0"
15 FT	3'- 6"	8'- 0"
16 FT	4'- 0"	8'- 0"

4-POST OPTION ADDED

THREE AND FOUR POSTS			
SIGN WIDTH, W		POST SPACING	
3 POSTS	4 POSTS	A	B
17 FT	25 FT	1'- 0"	7'- 6"
18 FT	26 FT	1'- 0"	8'- 0"
19 FT	27 FT	1'- 6"	8'- 0"
20 FT	28 FT	2'- 0"	8'- 0"
21 FT	29 FT	2'- 6"	8'- 0"
22 FT	30 FT	3'- 0"	8'- 0"
23 FT	31 FT	3'- 6"	8'- 0"
24 FT	32 FT	4'- 0"	8'- 0"

TABLE NOTES

1. ROUND DOWN SIGN WIDTH TO FIND "B" WHEN SIGN WIDTH FALLS BETWEEN TWO VALUES IN THE TABLE.
2. INCREASE "A" SO THAT SIGN IS CENTERED ON THE POST GROUP.

DESIGN DATA

AASHTO LRFD SPECIFICATIONS FOR STRUCTURAL SUPPORTS FOR HIGHWAY SIGNS, LUMINAIRES, AND TRAFFIC SIGNALS, 1ST EDITION 2015

STRUCTURAL STEEL: Fy = 35 KSI (PIPE)
Fy = 36 KSI (S- AND W-SHAPES; PLATES)

STRUCTURAL CONCRETE: f'c = 4.0 KSI n = 8 CLASS AA (AE) fy (REINF) = 60 KSI

WIND: EXTREME EVENT WIND SPEED = 76 MPH
SERVICE WIND SPEED = 76 MPH
EXPOSURE CATEGORY D

FATIGUE: FATIGUE CATEGORY I
NATURAL WIND GUST = 11.2 MPH

SOIL: SEE SOIL CONDITIONS TABLE ON STD DWG SN 15B2
TOP 1.5D (CONCRETE SHAFT) OF COHESIVE SOILS DOES NOT CONTRIBUTE IN EMBEDMENT CALCULATIONS

SN 15 SERIES STD DWGS GENERAL NOTES:

1. USE STRUCTURAL STEEL CONFORMING TO ASTM A 53, GRADE B FOR PIPE (STANDARD WEIGHT) AND ASTM A 36 FOR S- AND W-SHAPES AND PLATES.
2. USE BOLTS, NUTS, AND WASHER CONFORMING TO ASTM F3125, GRADE A325.
3. USE A ¼ INCH FILLET WELD FOR MATERIAL LESS THAN OR EQUAL TO ¾ INCH. USE A 5/16 INCH FILLET WELD FOR MATERIAL GREATER THAN ¾ INCH.
4. SAW CUT OR SHEAR PLATES. NO FLAME CUTTING IS ALLOWED.
5. MEET AASHTO M 111 (ASTM A 123) FOR GALVANIZING AFTER FABRICATION IS COMPLETED.
6. REFER TO STD DWG SN 2A AND 2B FOR SIGN HEIGHT AND SIGN OFFSET REQUIREMENTS.

DESIGN-ONLY NOTES:

A. USE A MINIMUM "B" OF 7 FT WHEN W-SHAPES ARE REQUIRED.

SHEET REVISION NOTES:
-POST AND FOUNDATION TABLE MOVED TO ANOTHER SHEET
-PANEL WIDTH INCREASED TO 32' BY ADDING 4 POST OPTION

REVISIONS

NO.	DATE	APPR.	REMARKS

UTAH DEPARTMENT OF TRANSPORTATION
STANDARD DRAWINGS FOR ROAD AND BRIDGE CONSTRUCTION
SALT LAKE CITY, UTAH

RECOMMENDED FOR APPROVAL — JAN. 01, 2017 DATE
CHAIRMAN STANDARDS COMMITTEE APPROVED — JAN. 01, 2017 DATE
DEPUTY DIRECTOR

FREEWAY SIGN
GENERAL REQUIREMENTS
STANDARD DRAWING TITLE

STD. DWG. NO.
SN 15B1

DGN File: L:\Standard Drawings\Imperial\2017 Approved\1-All Drawings\SN15B1.dgn
NOV-2016

POST AND FOUNDATION TABLE

SIGN HEIGHT, H	SIGN WIDTH, W																	
	ONE POST			TWO POSTS												THREE POSTS		FOUR POSTS	
	3'-0"	4'-0"	5'-0"	6'-0"	7'-0"	8'-0"	9'-0"	10'-0"	11'-0"	12'-0"	13'-0"	14'-0"	15'-0"	16'-0"	17'-0"	18'-0" TO 24'- 0"	25'-0"	26'-0" TO 32'-0"
1'-0"				S3 x 5.7 3'-9"/3'-6"	S3 x 5.7 3'-9"/3'-6"	S3 x 5.7 3'-9"/3'-6"	S3 x 5.7 3'-9"/3'-6"	S3 x 5.7 3'-9"/3'-6"	S3 x 5.7 3'-9"/3'-6"	S3 x 5.7 3'-9"/3'-9"	S3 x 5.7 3'-9"/3'-9"	S3 x 5.7 4'-0"/3'-9"	S3 x 5.7 4'-0"/3'-9"	S3 x 5.7 4'-0"/3'-9"	S3 x 5.7 4'-0"/4'-0"	S4 x 9.5 4'-0"/4'-0"	S3 x 5.7 4'-0"/4'-0"	S4 x 9.5 4'-0"/4'-0"
1'- 6"				S3 x 5.7 3'-9"/3'-6"	S3 x 5.7 3'-9"/3'-6"	S3 x 5.7 3'-9"/3'-9"	S3 x 5.7 4'-0"/3'-9"	S3 x 5.7 4'-0"/3'-9"	S3 x 5.7 4'-0"/3'-9"	S3 x 5.7 4'-0"/3'-9"	S4 x 9.5 4'-0"/3'-9"	S4 x 9.5 4'-0"/3'-9"	S4 x 9.5 4'-0"/3'-9"	S4 x 9.5 4'-0"/3'-9"	S4 x 9.5 4'-0"/4'-0"	S4 x 9.5 4'-3"/4'-0"	S4 x 9.5 4'-0"/4'-0"	S4 x 9.5 4'-3"/4'-0"
2'- 0"				S3 x 5.7 3'-9"/3'-9"	S3 x 5.7 4'-0"/3'-9"	S3 x 5.7 4'-0"/3'-9"	S4 x 9.5 4'-0"/3'-9"	S4 x 9.5 4'-0"/3'-9"	S4 x 9.5 4'-0"/3'-9"	S4 x 9.5 4'-0"/3'-9"	S4 x 9.5 4'-3"/3'-9"	S4 x 9.5 4'-3"/3'-9"	S4 x 9.5 4'-3"/4'-0"	S4 x 9.5 4'-3"/4'-0"	S4 x 9.5 4'-3"/4'-0"	S4 x 9.5 4'-3"/4'-0"	S4 x 9.5 4'-3"/4'-0"	S4 x 9.5 4'-3"/4'-0"
2'- 6"				S3 x 5.7 4'-0"/3'-9"	S4 x 9.5 4'-0"/3'-9"	S4 x 9.5 4'-0"/3'-9"	S4 x 9.5 4'-0"/3'-9"	S4 x 9.5 4'-3"/3'-9"	S4 x 9.5 4'-3"/3'-9"	S4 x 9.5 4'-3"/4'-0"	S4 x 9.5 4'-3"/4'-0"	S4 x 9.5 4'-3"/4'-0"	S4 x 9.5 4'-3"/4'-0"	S4 x 9.5 4'-6"/4'-0"	S4 x 9.5 4'-3"/4'-0"	S6 x 12.5 4'-6"/4'-0"	S4 x 9.5 4'-3"/4'-0"	S6 x 12.5 4'-6"/4'-0"
3'- 0"	3" Ø 4'-0"/4'-0"	4" Ø 4'-0"/4'-0"	4" Ø 4'-3"/4'-0"	S4 x 9.5 4'-0"/3'-9"	S4 x 9.5 4'-0"/3'-9"	S4 x 9.5 4'-3"/3'-9"	S4 x 9.5 4'-3"/3'-9"	S4 x 9.5 4'-3"/4'-0"	S4 x 9.5 4'-3"/4'-0"	S4 x 9.5 4'-3"/4'-0"	S4 x 9.5 4'-6"/4'-0"	S6 x 12.5 4'-6"/4'-0"	S6 x 12.5 4'-6"/4'-0"	S6 x 12.5 4'-6"/4'-0"	S6 x 12.5 4'-6"/4'-0"	S6 x 12.5 4'-6"/4'-0"	S6 x 12.5 4'-6"/4'-0"	S6 x 12.5 4'-6"/4'-3"
4'- 0"	4" Ø 4'-0"/4'-0"	4" Ø 4'-3"/4'-0"	5" Ø 4'-6"/4'-0"	S4 x 9.5 4'-3"/3'-9"	S4 x 9.5 4'- 3"/4'-0"	S4 x 9.5 4'-3"/4'-0"	S4 x 9.5 4'-3"/4'-0"	S6 x 12.5 4'-6"/4'-0"	S6 x 12.5 4'-6"/4'-0"	S6 x 12.5 4'-6"/4'-0"	S6 x 12.5 4'-6"/4'-3"	S6 x 12.5 4'-9"/4'-3"	S6 x 12.5 4'-9"/4'-3"	S6 x 12.5 4'-9"/4'-3"	S6 x 12.5 4'-9"/4'-3"	S6 x 12.5 4'-9"/4'-3"	S6 x 12.5 4'-9"/4'-3"	S6 x 12.5 4'-9"/4'-3"
5'- 0"	4" Ø 4'-3"/4'-0"	5" Ø 4'-6"/4'-0"	5" Ø 4'-6"/4'-3"	S4 x 9.5 4'-3"/4'-0"	S6 x 12.5 4'-6"/4'-0"	S6 x 12.5 4'-6"/4'-0"	S6 x 12.5 4'-6"/4'-0"	S6 x 12.5 4'-9"/4'-3"	S6 x 12.5 4'-9"/4'-3"	S6 x 12.5 4'-9"/4'-3"	S6 x 12.5 4'-9"/4'-3"	S6 x 12.5 5'-0"/4'-3"	S6 x 12.5 5'-0"/4'-6"	S6 x 12.5 5'-0"/4'-6"	S6 x 12.5 5'-0"/4'-6"	S6 x 12.5 5'-0"/4'-6"	S6 x 12.5 5'-0"/4'-6"	S6 x 12.5 5'-0"/4'-6"
6'- 0"	5" Ø 4'-6"/4'-0"	5" Ø 4'-9"/4'-3"	6" Ø 4'-9"/4'-3"	S4 x 9.5 4'-6"/4'-0"	S6 x 12.5 4'-6"/4'-0"	S6 x 12.5 4'-9"/4'-3"	S6 x 12.5 4'-9"/4'-3"	S6 x 12.5 4'-9"/4'-3"	S6 x 12.5 5'-0"/4'-3"	S6 x 12.5 5'-0"/4'-6"	S6 x 12.5 5'-0"/4'-6"	S6 x 17.25 5'-6"/4'-6"	S6 x 17.25 5'-6"/4'-6"	S8 x 18.4 5'-6"/4'-6"	S6 x 17.25 5'-6"/4'-6"	S8 x 18.4 5'-6"/4'-6"	S6 x 17.25 5'-6"/4'-6"	S8 x 18.4 5'-6"/4'-6"
7'- 0"	5" Ø 4'-9"/4'-0"	6" Ø 5'-0"/4'-3"	6" Ø 5'-0"/4'-6"	S6 x 12.5 4'-9"/4'-0"	S6 x 12.5 4'-9"/4'-3"	S6 x 12.5 4'-9"/4'-3"	S6 x 12.5 5'-0"/4'-3"	S6 x 12.5 5'-0"/4'-3"	S6 x 12.5 5'-6"/4'-6"	S6 x 17.25 5'-6"/4'-6"	S8 x 18.4 5'-6"/4'-6"	S8 x 18.4 5'-6"/4'-6"	S8 x 18.4 5'-6"/4'-9"	S8 x 18.4 5'-6"/4'-9"	S8 x 18.4 5'-6"/4'-9"	S8 x 18.4 5'-6"/4'-9"	S8 x 18.4 5'-6"/4'-9"	S8 x 18.4 5'-6"/4'-9"
8'- 0"	5" Ø 4'-9"/4'-3"	6" Ø 5'-0"/4'-3"	6" Ø 5'-6"/4'-6"	S6 x 12.5 4'-9"/4'-3"	S6 x 12.5 5'-0"/4'-3"	S6 x 12.5 5'-0"/4'-3"	S6 x 12.5 5'-6"/4'-6"	S6 x 17.25 5'-6"/4'-6"	S6 x 17.25 5'-6"/4'-6"	S8 x 18.4 5'-6"/4'-6"	S8 x 18.4 5'-6"/4'-9"	S8 x 18.4 6'-0"/4'-9"	S8 x 18.4 6'-0"/4'-9"	S8 x 18.4 6'-0"/4'-9"	S8 x 18.4 6'-0"/4'-9"	S8 x 18.4 6'-0"/4'-9"	S8 x 18.4 6'-0"/4'-9"	S8 x 18.4 6'-0"/4'-9"
9'- 0"	6" Ø 5'-0"/4'-3"	6" Ø 5'-6"/4'-6"	8" Ø 5'-6"/4'-6"	S6 x 12.5 5'-0"/4'-3"	S6 x 12.5 5'-0"/4'-3"	S6 x 12.5 5'-6"/4'-6"	S6 x 17.25 5'-6"/4'-6"	S8 x 18.4 5'-6"/4'-6"	S8 x 18.4 5'-6"/4'-9"	S8 x 18.4 6'-0"/4'-9"	S8 x 18.4 6'-0"/4'-9"	S8 x 18.4 6'-0"/4'-9"	S8 x 18.4 6'-0"/5'-0"	W10 x 19 6'-0"/5'-0"	S8 x 18.4 6'-0"/5'-0"	W10 x 19 6'-0"/5'-0"	S8 x 18.4 6'-0"/5'-0"	W10 x 19 6'-0"/5'-0"
10'- 0"	6" Ø 5'-6"/4'-3"	8" Ø 5'-6"/4'-6"	8" Ø 6'-0"/5'-0"	S6 x 12.5 5'-6"/4'-3"	S6 x 17.25 5'-6"/4'-6"	S6 x 17.25 5'-6"/4'-6"	S8 x 18.4 5'-6"/4'-6"	S8 x 18.4 6'-0"/4'-9"	S8 x 18.4 6'-0"/4'-9"	S8 x 18.4 6'-0"/4'-9"	S8 x 18.4 6'-0"/5'-0"	W10 x 19 6'-6"/5'-0"	W10 x 19 6'-6"/5'-0"	W10 x 19 6'-6"/5'-0"	W10 x 19 6'-6"/5'-0"	W10 x 19 6'-6"/5'-6"	W10 x 19 6'-6"/5'-0"	W10 x 19 6'-6"/5'-6"
11'- 0"				S6 x 17.25 5'-6"/4'-6"	S6 x 17.25 5'-6"/4'-6"	S8 x 18.4 6'-0"/4'-6"	S8 x 18.4 6'-0"/4'-9"	S8 x 18.4 6'-0"/4'-9"	S8 x 18.4 6'-0"/4'-9"	S8 x 18.4 6'-0"/5'-0"	W10 x 19 6'-6"/5'-0"	W10 x 19 6'-6"/5'-0"	W10 x 19 6'-6"/5'-6"	W10 x 22 6'-6"/5'-6"	W10 x 19 6'-6"/5'-6"	W10 x 22 7'-0"/5'-6"	W10 x 19 6'-6"/5'-6"	W10 x 22 7'-0"/5'-6"
12'- 0"				S6 x 17.25 5'-6"/4'-6"	S8 x 18.4 6'-0"/4'-6"	S8 x 18.4 6'-0"/4'-9"	S8 x 18.4 6'-0"/4'-9"	S8 x 18.4 6'-0"/4'-9"	W10 x 19 6'-6"/5'-0"	W10 x 19 6'-6"/5'-0"	W10 x 19 6'-6"/5'-0"	W10 x 19 6'-6"/5'-6"	W10 x 22 7'-0"/5'-6"	W10 x 22 7'-0"/5'-6"	W10 x 22 7'-0"/5'-6"	W10 x 22 7'-0"/5'-6"	W10 x 22 7'-0"/5'-6"	W10 x 22 7'-0"/5'-6"
13'- 0"				S8 x 18.4 6'-0"/4'-6"	S8 x 18.4 6'-0"/4'-9"	S8 x 18.4 6'-0"/4'-9"	S8 x 18.4 6'-6"/4'-9"	W10 x 19 6'-6"/5'-0"	W10 x 19 6'-6"/5'-0"	W10 x 19 6'-6"/5'-6"	W10 x 22 7'-0"/5'-6"	W10 x 22 7'-0"/5'-6"	W10 x 22 7'-0"/5'-6"	W10 x 22 7'-0"/5'-6"	W10 x 26 7'-0"/5'-6"	W10 x 26 7'-6"/5'-6"	W10 x 26 7'-0"/5'-6"	W10 x 26 7'-6"/5'-6"
14'- 0"				S8 x 18.4 6'-0"/4'-9"	S8 x 18.4 6'-0"/4'-9"	S8 x 18.4 6'-6"/4'-9"	W10 x 19 6'-6"/5'-0"	W10 x 19 6'-6"/5'-0"	W10 x 19 7'-0"/5'-6"	W10 x 22 7'-0"/5'-6"	W10 x 22 7'-0"/5'-6"	W10 x 22 7'-0"/5'-6"	W10 x 26 7'-6"/5'-6"	W10 x 26 7'-6"/5'-6"	W10 x 26 7'-6"/5'-6"	W10 x 30 7'-6"/6'-0"	W10 x 26 7'-6"/5'-6"	W10 x 30 7'-6"/6'-0"
15'- 0"				S8 x 18.4 6'-0"/4'-9"	S8 x 18.4 6'-6"/4'-9"	W10 x 19 6'-6"/5'-0"	W10 x 19 7'-0"/5'-0"	W10 x 22 7'-0"/5'-6"	W10 x 22 7'-0"/5'-6"	W10 x 22 7'-0"/5'-6"	W10 x 26 7'-6"/5'-6"	W10 x 26 7'-6"/5'-6"	W10 x 26 7'-6"/5'-6"	W10 x 30 7'-6"/6'-0"	W10 x 30 7'-6"/6'-0"	W10 x 30 8'-0"/6'-0"	W10 x 30 7'-6"/6'-0"	W10 x 30 8'-0"/6'-0"
16'- 0"				S8 x 18.4 6'-6"/5'-6"	W10 x 19 6'-6"/5'-6"	W10 x 19 7'-0"/6'-0"	W10 x 22 7'-0"/6'-0"	W10 x 22 7'-0"/6'-0"	W10 x 22 7'-6"/6'-0"	W10 x 26 7'-6"/6'-0"	W10 x 26 7'-6"/6'-0"	W10 x 30 7'-6"/6'-6"	W10 x 30 8'-0"/6'-6"	W10 x 30 8'-0"/6'-6"	W10 x 30 8'-0"/6'-6"	W10 x 39 8'-0"/6'-6"	W10 x 30 8'-0"/6'-6"	W10 x 39 8'-0"/6'-6"
17'- 0"				S8 x 18.4 6'-6"/5'-6"	W10 x 19 7'-0"/5'-6"	W10 x 19 7'-0"/6'-0"	W10 x 22 7'-0"/6'-0"	W10 x 22 7'-6"/6'-0"	W10 x 26 7'-6"/6'-0"	W10 x 26 7'-6"/6'-0"	W10 x 30 8'-0"/6'-6"	W10 x 30 8'-0"/6'-6"	W10 x 39 8'-0"/6'-6"	W10 x 39 8'-0"/6'-6"	W10 x 39 8'-0"/6'-6"	W10 x 39 8'-0"/6'-6"	W10 x 39 8'-0"/6'-6"	W10 x 39 8'-0"/6'-6"
18'- 0"				W10 x 19 7'-0"/5'-6"	W10 x 19 7'-0"/6'-0"	W10 x 22 7'-0"/6'-0"	W10 x 22 7'-6"/6'-0"	W10 x 26 7'-6"/6'-0"	W10 x 26 7'-6"/6'-0"	W10 x 30 8'-0"/6'-6"	W10 x 30 8'-0"/6'-6"	W10 x 39 8'-0"/6'-6"	W10 x 39 8'-6"/6'-6"	W10 x 39 8'-6"/6'-6"	W10 x 39 8'-6"/6'-6"	W10 x 39 8'-6"/6'-6"	W10 x 39 8'-6"/6'-6"	W10 x 39 8'-6"/6'-6"
19'- 0"				W10 x 19 7'-0"/5'-6"	W10 x 22 7'-0"/6'-0"	W10 x 22 7'-6"/6'-0"	W10 x 26 7'-6"/6'-0"	W10 x 26 8'-0"/6'-0"	W10 x 30 8'-0"/6'-6"	W10 x 39 8'-0"/6'-6"	W10 x 39 8'-6"/6'-6"	W10 x 39 8'-6"/6'-6"	W10 x 39 8'-6"/6'-6"	W10 x 45 8'-6"/7'-0"	W10 x 39 8'-6"/6'-6"	W10 x 45 8'-6"/7'-0"	W10 x 39 8'-6"/6'-6"	W10 x 45 8'-6"/7'-0"
20'- 0"				W10 x 19 7'-0"/6'-0"	W10 x 22 7'-6"/6'-0"	W10 x 26 7'-6"/6'-0"	W10 x 26 8'-0"/6'-0"	W10 x 30 8'-0"/6'-6"	W10 x 39 8'-0"/6'-6"	W10 x 39 8'-6"/6'-6"	W10 x 39 8'-6"/6'-6"	W10 x 39 8'-6"/6'-6"	W10 x 45 9'-0"/7'-0"	W10 x 45 9'-0"/7'-0"	W10 x 45 9'-0"/7'-0"	W10 x 45 9'-0"/7'-0"	W10 x 45 9'-0"/7'-0"	W10 x 45 9'-0"/7'-0"
21'- 0"				W10 x 22 7'-0"/6'-0"	W10 x 22 7'-6"/6'-0"	W10 x 26 8'-0"/6'-0"	W10 x 30 8'-0"/6'-6"	W10 x 39 8'-0"/6'-6"	W10 x 39 8'-6"/6'-6"	W10 x 39 8'-6"/6'-6"	W10 x 39 8'-6"/6'-6"	W10 x 45 9'-0"/7'-0"	W10 x 45 9'-0"/7'-0"	W10 x 49 9'-0"/7'-0"	W10 x 45 9'-0"/7'-0"	W10 x 49 9'-0"/7'-0"	W10 x 45 9'-0"/7'-0"	W10 x 49 9'-0"/7'-0"
22'- 0"				W10 x 22 7'-6"/6'-0"	W10 x 26 8'-0"/6'-0"	W10 x 30 8'-0"/6'-0"	W10 x 30 8'-0"/6'-6"	W10 x 39 8'-6"/6'-6"	W10 x 39 8'-6"/6'-6"	W10 x 39 9'-0"/7'-0"	W10 x 45 9'-0"/7'-0"	W10 x 45 9'-0"/7'-0"	W10 x 49 9'-6"/7'-0"	W10 x 49 9'-6"/7'-0"	W10 x 49 9'-6"/7'-0"	W10 x 49 9'-6"/7'-0"	W10 x 49 9'-6"/7'-0"	W10 x 49 9'-6"/7'-0"

TABLE KEY

TOP VALUE: PIPE DIAMETER (Ø) OR STRUCTURAL SHAPE

BOTTOM VALUE: MINIMUM FOUNDATION EMBEDMENT - SOFT OR LOOSE SOIL/MEDIUM SOIL

SOIL CONDITIONS TABLE

SOFT OR LOOSE SOIL		MEDIUM SOIL	
COHESIVE	GRANULAR	COHESIVE	GRANULAR
MOIST UNIT WEIGHT = 110 PCF COHESION (C) = 750 PSF STRAIN FACTOR (E50) = 0.01 SOIL MODULUS (K) = 100 PCI	UNIT WEIGHT = 115 PCF SHEAR STRENGTH = 30° SOIL MODULUS (K) = 50 PCI	MOIST UNIT WEIGHT = 125 PCF COHESION (C) = 1,500 PSF STRAIN FACTOR (E50) = 0.007 SOIL MODULUS (K) = 500 PCI	UNIT WEIGHT = 125 PCF SHEAR STRENGTH = 34° SOIL MODULUS (K) = 90 PCI

NOTES:

1. SEE STD DWG SN 15B1 FOR GENERAL NOTES.
2. USE THE HIGHER VALUES WHEN SIGN HEIGHT OR WIDTH FALLS BETWEEN TWO VALUES.
3. USE OF Z-BAR IS PERMITTED FOR SIGN APPLICATIONS WITHIN DASHED LINE AREA, SEE STD DWG SN 8. DO NOT USE Z-BAR FOR MULTIPANEL SIGN APPLICATIONS.
4. USE EMBEDMENT VALUES FOR SOFT OR LOOSE SOIL CONDITIONS UNLESS OTHERWISE SPECIFIED.

DESIGN-ONLY NOTES:

A. USE EMBEDMENTS FOR SOFT OR LOOSE SOIL CONDITIONS UNLESS GEOTECHNICAL ENGINEER RECOMMENDS THAT THE SITE MEETS OR EXCEEDS THE MEDIUM SOIL CONDITIONS.

REVISIONS

NO.	DATE	APPR.	REMARKS

UTAH DEPARTMENT OF TRANSPORTATION
STANDARD DRAWINGS FOR ROAD AND BRIDGE CONSTRUCTION
SALT LAKE CITY, UTAH

RECOMMENDED FOR APPROVAL — JAN. 01, 2017 DATE
CHAIRMAN STANDARDS COMMITTEE APPROVED — JAN. 01, 2017 DATE
DEPUTY DIRECTOR

STANDARD DRAWING TITLE
FREEWAY SIGN
POST AND FOUNDATION
REQUIREMENTS

STD. DWG. NO.
SN 15B2

DGN File:L:\Standard Drawings\Imperial\2017 Approved\1-All Drawings\SN15B2.dgn
NOV-2016

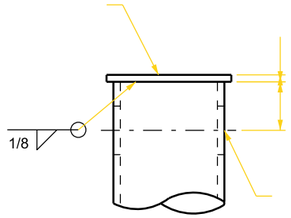

TOP OF PIPE DETAIL

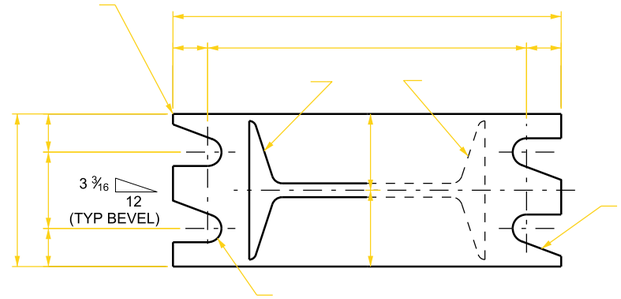

SECTION A - A

BASE POST B6B SHOWN,
B6A AND B6C SIMILAR

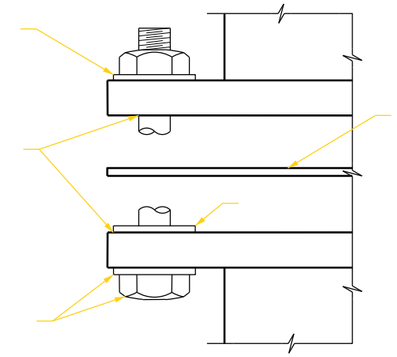

DETAIL A

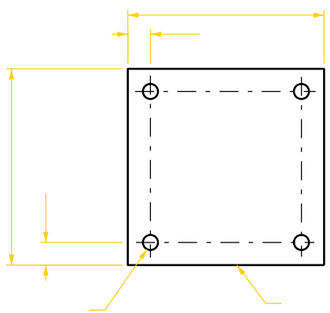

BASE POST BOTTOM PLATE DETAIL

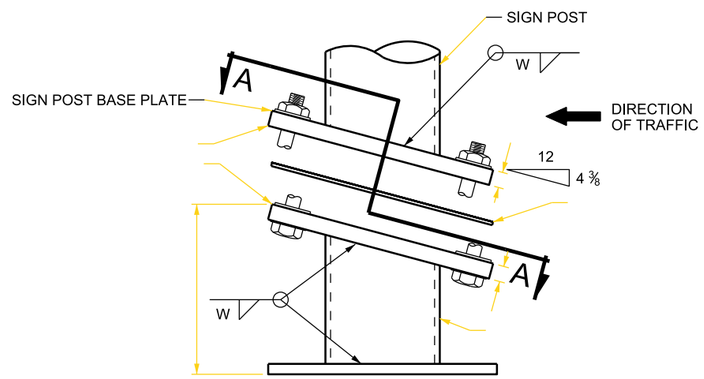

BASE POST B6A ELEVATION

SEE NOTE 5

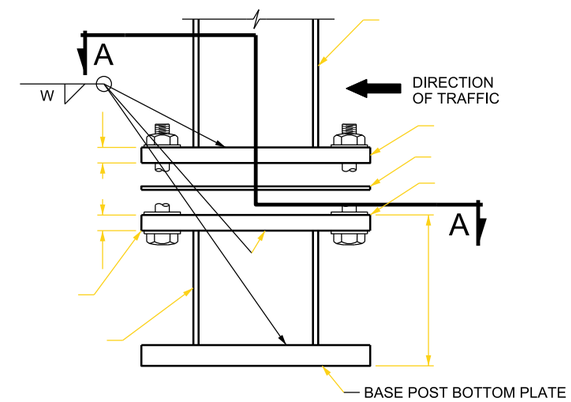

BASE POST B6B AND B6C ELEVATION

BASE CONNECTION TABLE

POST SIZE	BASE POST	BASE POST BOTTOM PLATE					BASE POST UPPER PLATE AND SIGN POST BASE PLATE								
		ANCHOR BOLT	A	B	D1	T1	BOLT SIZE AND TORQUE	C	E	F	G	H	J	T2	W
3" DIA STD PIPE	B6A	7/8" DIA x 2'- 6"	7 1/2"	1 1/2"	1"	3/4"	1/2" DIA x 2 1/2" 10 FT-LB TORQUE	4 1/2"	1"	2 1/2"	7 1/2"	3/4"	6"	3/4"	1/4"
4" DIA STD PIPE		7/8" DIA x 2'- 6"	8 1/2"	1 1/2"	1"	7/8"		5 1/2"	1"	3 1/2"	8 1/2"	3/4"	7"	3/4"	1/4"
5" DIA STD PIPE		7/8" DIA x 2'- 6"	10 1/2"	1 3/4"	1"	1"	5/8" DIA x 3 1/2" 24 FT-LB TORQUE	6 1/2"	1 1/4"	4"	10 1/4"	7/8"	8 1/2"	1"	5/16"
6" DIA STD PIPE			10 1/2"	1 3/4"	1"	1"		7 1/2"	1 1/4"	5"	11 1/2"	7/8"	9 3/4"	1"	5/16"
8" DIA STD PIPE		7/8" DIA x 2'- 6"	1'- 0 1/2"	2"	1"	1 1/4"		9 1/2"	1 1/4"	7"	1'- 2"	7/8"	1'- 0 1/4"	1"	5/16"
S3 x 5.7	B6B	7/8" DIA x 2'- 6"	7 1/2"	1 1/2"	1"	3/4"	1/2" DIA x 2 1/2" 10 FT-LB TORQUE	3"	7/8"	1 1/2"	7 1/2"	3/4"	6"	5/8"	1/4"
S4 x 9.5		7/8" DIA x 2'- 6"	8 1/2"	1 1/2"	1"	7/8"		3 1/2"	7/8"	2"	7 1/2"	3/4"	6"	5/8"	1/4"
S6 x 12.5		7/8" DIA x 2'- 6"	10 1/2"	1 3/4"	1"	1"	5/8" DIA x 3" 24 FT-LB TORQUE	4 1/2"	1 1/8"	2 1/4"	10"	3/4"	8 1/2"	3/4"	1/4"
S6 x 17.25		7/8" DIA x 2'- 6"	10 1/2"	1 3/4"	1"	1"		4 1/2"	1 1/8"	2 1/4"	10"	3/4"	8 1/2"	3/4"	1/4"
S8 x 18.4		7/8" DIA x 2'- 6"	1'- 0 1/2"	2"	1"	1 1/4"		5"	1 1/8"	2 3/4"	12"	3/4"	10 1/2"	3/4"	1/4"
W10 x 19	B6C	7/8" DIA x 2'- 6"	1'- 3"	2 1/4"	1"	1 1/4"	3/4" DIA x 3 1/2" 38 FT-LB TORQUE	6"	1 1/4"	3 1/2"	1'- 2 1/2"	7/8"	1'- 0 3/4"	1"	5/16"
W10 x 22		1 1/4" DIA x 2'- 6"	1'- 3"	2 1/4"	1 3/8"	1 3/4"		7"	1 1/2"	4"	1'- 3"	7/8"	1'- 1 1/4"	1"	5/16"
W10 x 26		1 1/4" DIA x 2'- 6"	1'- 3"	2 1/4"	1 3/8"	1 3/4"		7"	1 1/2"	4"	1'- 3"	7/8"	1'- 1 1/4"	1"	5/16"
W10 x 30		1 1/4" DIA x 2'- 6"	1'- 3"	2 1/4"	1 3/8"	1 3/4"	1" DIA x 3 1/2" 55 FT-LB TORQUE	7"	1 3/4"	3 1/2"	1'- 3"	7/8"	1'- 1 1/4"	1 1/8"	5/16"
W10 x 39		1 1/4" DIA x 2'- 6"	1'- 5 1/2"	2 1/2"	1 3/8"	1 3/4"		9"	1 3/4"	5 1/2"	1'- 3"	7/8"	1'- 1 1/4"	1 1/8"	5/16"
W10 x 45		1 1/4" DIA x 2'- 6"	1'- 5 1/2"	2 1/2"	1 3/8"	1 3/4"		9"	1 3/4"	5 1/2"	1'- 3"	7/8"	1'- 1 1/4"	1 1/8"	5/16"
W10 x 49		1 1/4" DIA x 2'- 6"	1'- 5 1/2"	2 1/2"	1 3/8"	1 3/4"		11"	1 3/4	7 1/2"	1'- 3"	7/8"	1'- 1 1/4"	1 1/8"	5/16"

NOTES:

1. REFER TO STD DWG SN 15B1 FOR GENERAL NOTES.
2. TIGHTEN BOLTS ONLY TO THE TORQUE LIMITS SHOWN IN THE TABLE. DO NOT OVER TIGHTEN.
3. USE THE SAME SHAPE FOR SIGN POST AND BASE POST.
4. BEVELS SHOWN IN SECTION A-A ARE FOR INSTALLATIONS ON RIGHT SHOULDER AND IN GORE. BEVELS ARE OPPOSITE HAND FROM THAT SHOWN FOR INSTALLATION ON LEFT SHOULDER.
5. USE BASE POST B6A FOR PIPE POST APPLICATIONS UNLESS OTHERWISE DIRECTED BY THE ENGINEER.
6. USE ASTM F1554 STEEL FOR ANCHOR BOLTS. USE GRADE 36 UNLESS NOTED OTHERWISE. FULLY TORQUE ANCHOR BOLTS.

DESIGN-ONLY NOTES:

A. DO NOT USE INCLINE BASE WHERE THERE IS A POTENTIAL OF A BACKSIDE IMPACT.

REVISIONS

NO.	DATE	APPR.	REMARKS

UTAH DEPARTMENT OF TRANSPORTATION
STANDARD DRAWINGS FOR ROAD AND BRIDGE CONSTRUCTION
SALT LAKE CITY, UTAH

RECOMMENDED FOR APPROVAL — JAN. 01, 2017 DATE
CHAIRMAN STANDARDS COMMITTEE APPROVED — JAN. 01, 2017 DATE
DEPUTY DIRECTOR

FREEWAY SIGN BASE POST REQUIREMENTS (B6A, B6B, AND B6C)
STANDARD DRAWING TITLE

STD. DWG. NO.
SN 15C

DGN File: L:\Standard Drawings\Imperial\2017 Approved\1-All Drawings\SN15C.dgn
28-NOV-2016

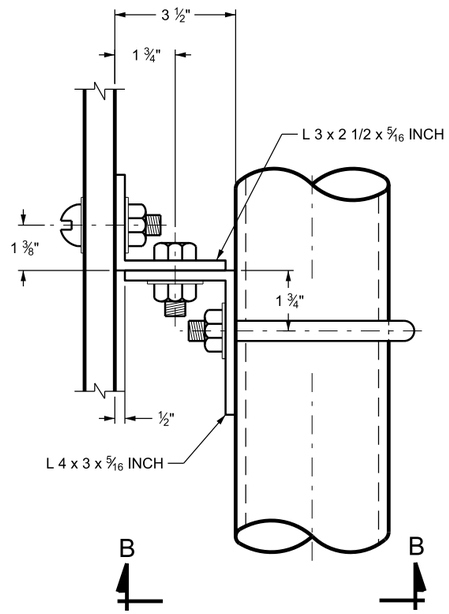

BRACKET DETAIL

SIDE VIEW
(FOR PIPE POST) SEE NOTE 2

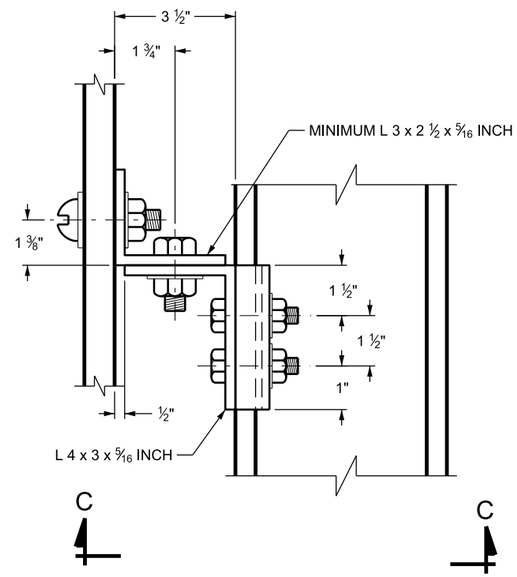

BRACKET DETAIL

SIDE VIEW
(FOR S OR W POST) SEE NOTE 2

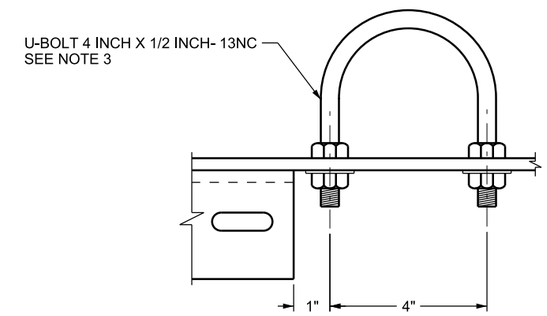

HANDLING BRACKET DETAIL

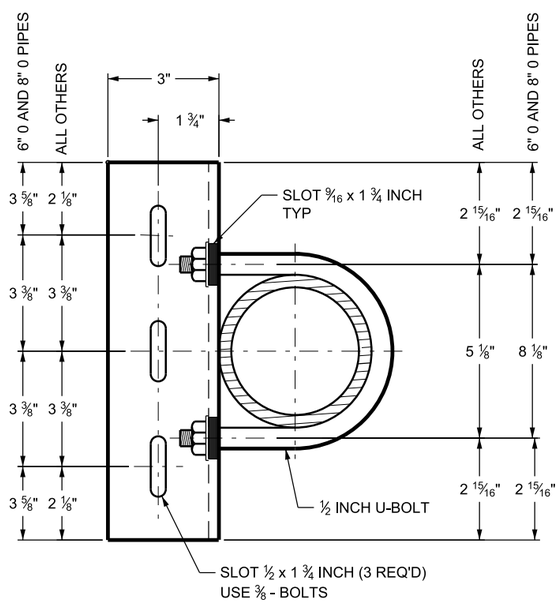

SECTION B-B

TOP VIEW

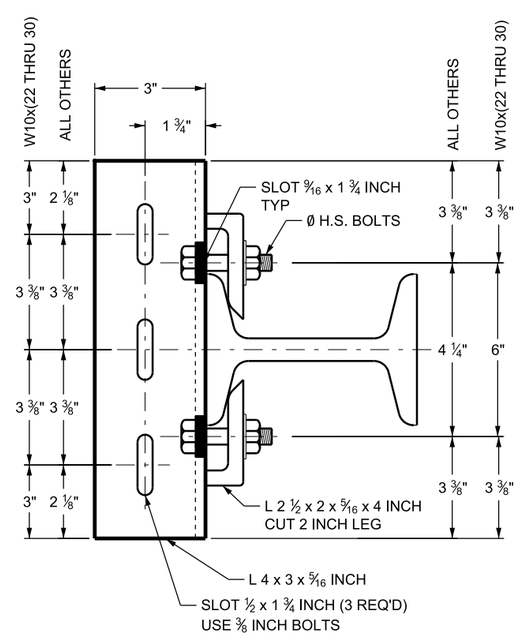

SECTION C-C

TOP VIEW

NOTES:

1. REFER TO STD DWG SN 15B1 FOR GENERAL NOTES.
2. Z-BAR TO POST ATTACHMENT ACCEPTABLE ACCORDING TO STD DWG SN 15B2 SIGN PANEL POST FOUNDATION TABLE.
3. USE GALVANIZED HARDWARE EXCEPT AS NOTED.

REVISIONS

NO.	DATE	APPR.	REMARKS

UTAH DEPARTMENT OF TRANSPORTATION
STANDARD DRAWINGS FOR ROAD AND BRIDGE CONSTRUCTION
SALT LAKE CITY, UTAH

RECOMMENDED FOR APPROVAL — JAN. 01, 2017 DATE
CHAIRMAN STANDARDS COMMITTEE
APPROVED — JAN. 01, 2017 DATE
DEPUTY DIRECTOR

FREEWAY SIGN BRACKET DETAILS

STANDARD DRAWING TITLE

STD. DWG. NO.
SN 15D

DGN File: L:\Standard Drawings\Imperial\2017 Approved\1-All Drawings\SN15D.dgn
28-NOV-2016

FUSE PLATE AND SPLICE PLATE TABLE												
POST SIZE	K	L	M	N	P	Q	R	S	D2	D3	T3	BOLT SIZE
S3 x 5.7	3 1/2"	2"	3/4"	2 7/8"	1 3/8"	3/4"	1/2"	5/8"	5/8"	3/8"	1/4"	1/2"
S4 x 9.5	4 1/4"	2 1/4"	1"	2 7/8"	1 3/8"	3/4"	1/2"	5/8"	5/8"	3/8"	5/16"	1/2"
S6 x 12.5	4 3/4"	2 1/2"	1 1/8"	4 1/4"	1 3/4"	1 1/4"	5/8"	1"	5/8"	3/4"	3/8"	1/2"
S6 x 17.25	4 3/4"	2 1/2"	1 1/8"	4 1/4"	1 3/4"	1 1/4"	5/8"	1"	3/4"	3/4"	1/2"	5/8"
S8 x 18.4	5"	2 1/2"	1 1/4"	5 3/4"	2"	1 7/8"	13/16"	1 3/8"	7/8"	1 1/8"	1 1/4"	3/4"
W10 x 19	6"	3"	1 1/2"	5 3/4"	2"	1 7/8"	13/16"	1 3/8"	7/8"	1 1/8"	3/4"	3/4"
W10 x 22	6"	3"	1 1/2"	5 3/4"	3 1/2"	1 1/8"	13/16"	1 3/8"	1"	1 1/8"	7/8"	7/8"
W10 x 26	6"	3"	1 1/2"	5 3/4"	3 1/2"	1 1/8"	13/16"	1 3/8"	1"	1 1/8"	7/8"	7/8"
W10 x 30	6"	3"	1 1/2"	5 3/4"	3 1/2"	1 1/8"	13/16"	1 3/8"	1"	1 1/8"	7/8"	7/8"
W10 x 39	6"	3"	1 1/2"	6"	3 3/4"	1 1/8"	15/16"	1 3/8"	1"	1 1/8"	1"	7/8"
W10 x 45	6"	3"	1 1/2"	6"	3 3/4"	1 1/8"	15/16"	1 3/8"	1"	1 1/8"	7/8"	7/8"
W10 x 49	6"	3"	1 1/2"	6"	3 3/4"	1 1/8"	15/16"	1 3/8"	1"	1 1/8"	7/8"	7/8"

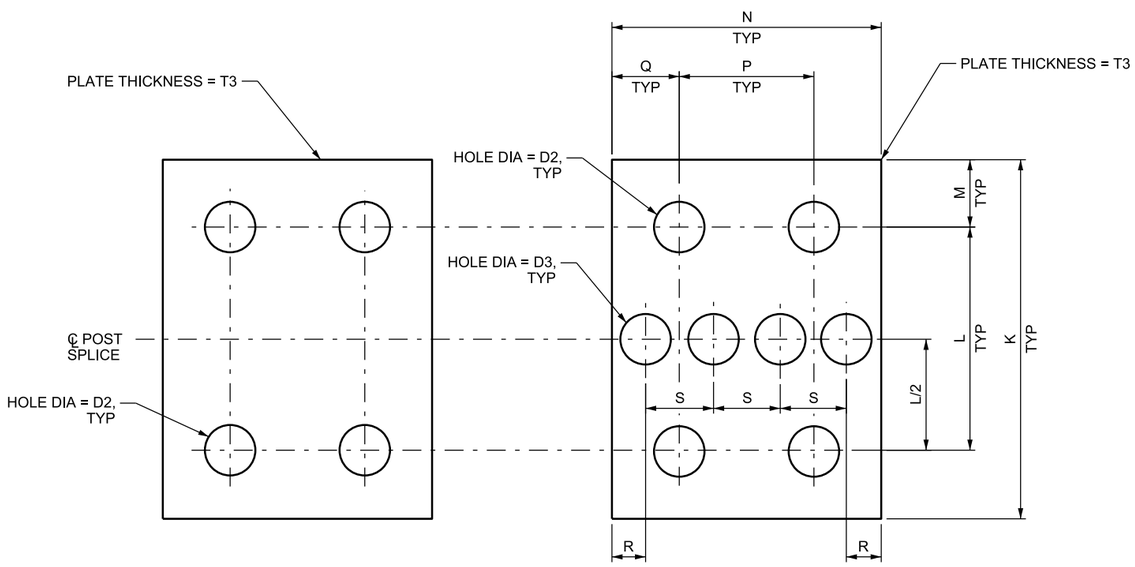

SPLICE PLATE (REAR) DETAIL

FUSE PLATE (FRONT) DETAIL

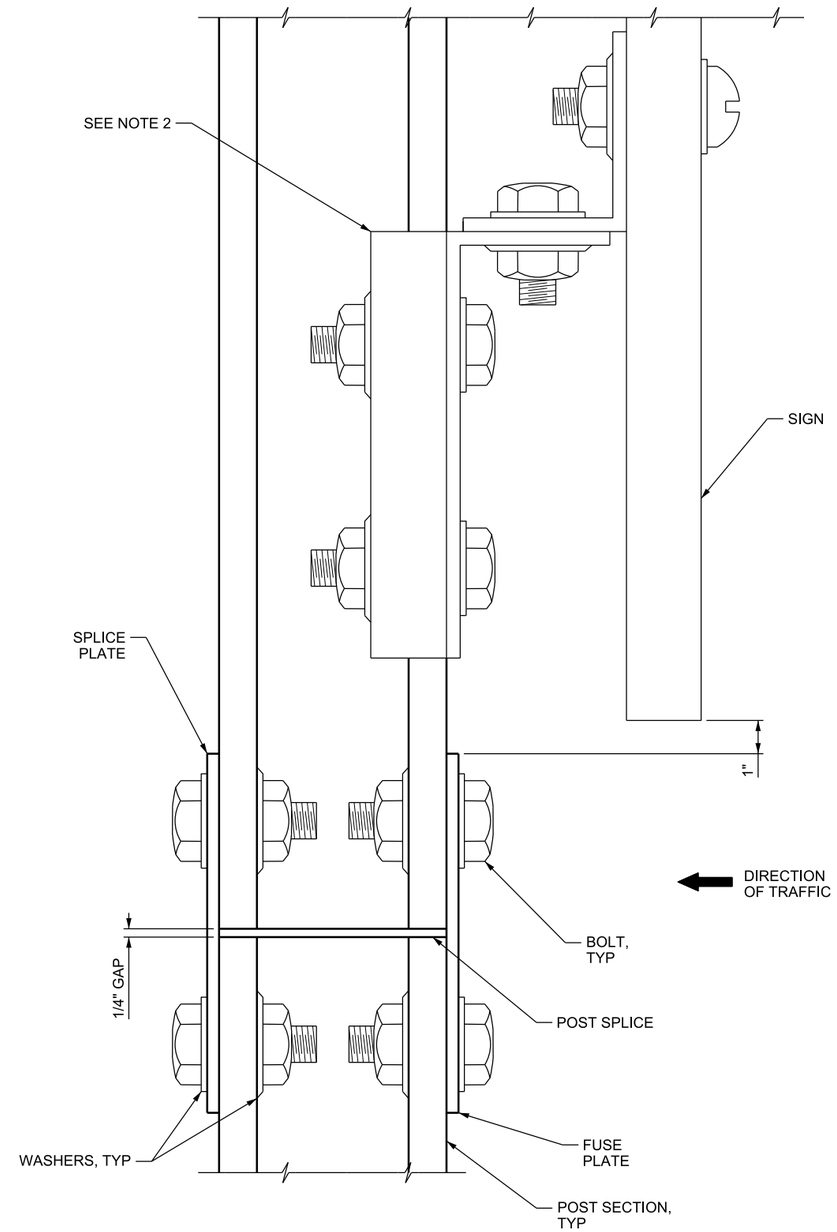

POST BREAK-AWAY ASSEMBLY

NOTES:

1. REFER TO STD DWG SN 15B1 FOR GENERAL NOTES.
2. SEE BRACKET DETAIL ON STD DWG SN 15A OR STD DWG SN 9A FOR Z-BAR DETAILS.

REVISIONS

NO.	DATE	APPR.	REMARKS

UTAH DEPARTMENT OF TRANSPORTATION
STANDARD DRAWINGS FOR ROAD AND BRIDGE CONSTRUCTION
SALT LAKE CITY, UTAH

RECOMMENDED FOR APPROVAL — JAN. 01, 2017 DATE
CHAIRMAN STANDARDS COMMITTEE APPROVED — JAN. 01, 2017 DATE
DEPUTY DIRECTOR

FREEWAY SIGN FUSE PLATE REQUIREMENTS
STANDARD DRAWING TITLE

STD. DWG. NO.
SN 15E

DGN File: L:\Standard_Drawings\Imperial\2017 Approved\1-All Drawings\SN15E.dgn
28-NOV-2016

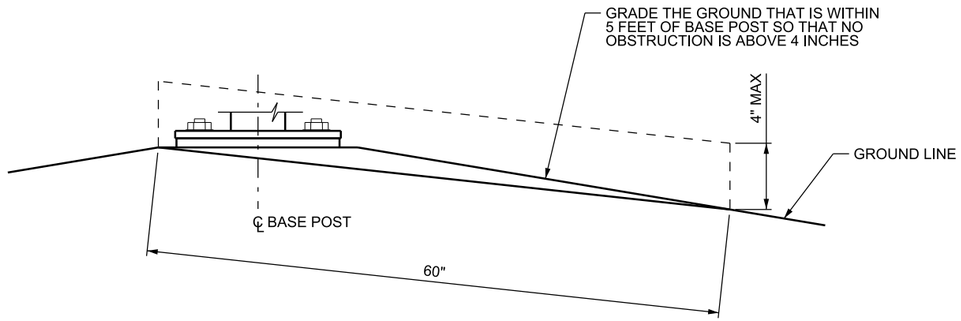

FOUNDATION GRADING DETAIL

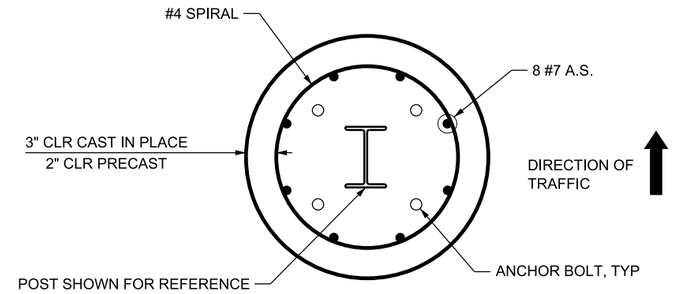

SECTION A-A

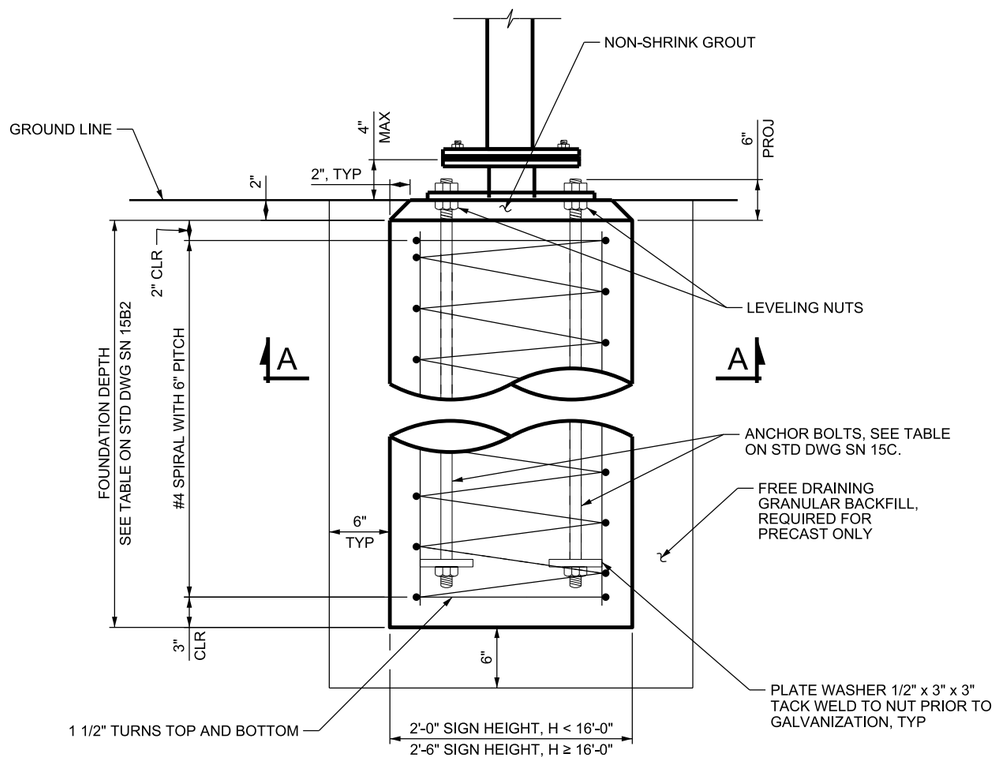

FOUNDATION ELEVATION

NOTES:

1. USE THIS FOUNDATION FOR SIGN BASES B6A, B6B, OR B6C.
2. REFER TO STD DWG SN 15B1 FOR GENERAL NOTES.
3. REFER TO SIGN POST AND FOUNDATION TABLE ON STD DWG SN B2.
4. USE CONCRETE CLASS AA(AE).
5. USE COATED DEFORMED CARBON STEEL BARS CONFORMING TO AASHTO M111 OR ASTM A775 AND AASHTO M31 GRADE 60, RESPECTIVELY.
6. COAT OR GALAVANIZE PLATE WASHERS.

DESIGN-ONLY NOTES:

A. REFER TO THE AASHTO ROADSIDE DESIGN GUIDE (CHAPTER 4) FOR BREAKAWAY SUPPORT (BASE POST) STUB HEIGHT REQUIREMENTS.

REVISIONS

NO.	DATE	APPR.	REMARKS

UTAH DEPARTMENT OF TRANSPORTATION
STANDARD DRAWINGS FOR ROAD AND BRIDGE CONSTRUCTION
SALT LAKE CITY, UTAH

RECOMMENDED FOR APPROVAL — JAN. 01, 2017 DATE
CHAIRMAN STANDARDS COMMITTEE APPROVED — JAN. 01, 2017 DATE
DEPUTY DIRECTOR

STANDARD DRAWING TITLE
FREEWAY SIGN FOUNDATION REQUIREMENTS

STD. DWG. NO.
SN 15F

DGN File: L:\Standard_Drawings\Imperial\2017 Approved\1-All Drawings\SN15F.dgn
28-NOV-2016

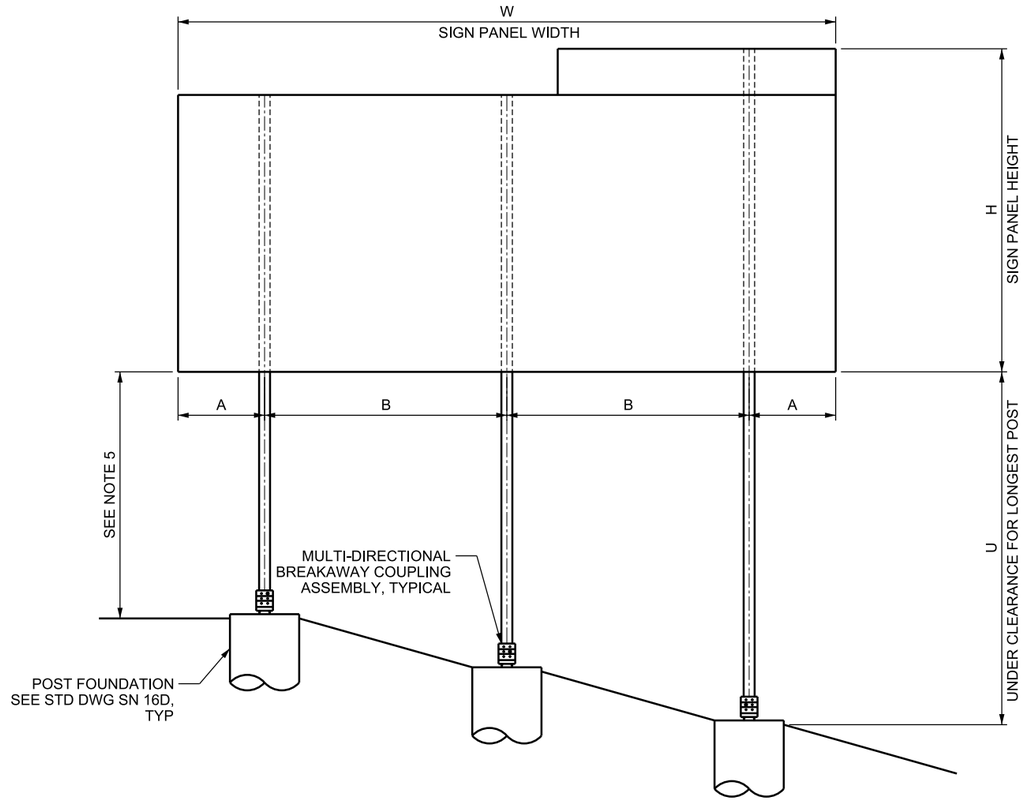

POST SPACING DIAGRAM

3-POST OPTION SHOWN, OTHERS SIMILAR

TWO POSTS		
SIGN WIDTH, W	POST SPACING	
	A	B
6 FT	1'- 0"	4'- 0"
7 FT	1'- 0"	5'- 0"
8 FT	1'- 0"	6'- 0"
9 FT	1'- 0"	7'- 0"
10 FT	1'- 0"	8'- 0"
11 FT	1'- 6"	8'- 0"
12 FT	2'- 0"	8'- 0"
13 FT	2'- 6"	8'- 0"
14 FT	3'- 0"	8'- 0"
15 FT	3'- 6"	8'- 0"
16 FT	4'- 0"	8'- 0"

THREE AND FOUR POSTS			
SIGN WIDTH, W		POST SPACING	
3 POSTS	4 POSTS	A	B
17 FT	25 FT	1'- 0"	7'- 6"
18 FT	26 FT	1'- 0"	8'- 0"
19 FT	27 FT	1'- 6"	8'- 0"
20 FT	28 FT	2'- 0"	8'- 0"
21 FT	29 FT	2'- 6"	8'- 0"
22 FT	30 FT	3'- 0"	8'- 0"
23 FT	31 FT	3'- 6"	8'- 0"
24 FT	32 FT	4'- 0"	8'- 0"

TABLE NOTES

1. ROUND DOWN SIGN WIDTH TO FIND "B" WHEN SIGN WIDTH FALLS BETWEEN TWO VALUES IN THE TABLE.
2. INCREASE "A" SO THAT SIGN IS CENTERED ON THE POST GROUP.

DESIGN DATA

AASHTO LRFD SPECIFICATIONS FOR STRUCTURAL SUPPORTS FOR HIGHWAY SIGNS, LUMINAIRES, AND TRAFFIC SIGNALS

STRUCTURAL STEEL: Fy = 35 KSI (PIPE)
Fy = 36 KSI (S- AND W-SHAPES; PLATES)

STRUCTURAL CONCRETE: f'c = 4.0 KSI n = 8 CLASS AA (AE) fy (REINF) = 60 KSI

WIND: EXTREME EVENT WIND SPEED = 76 MPH
SERVICE WIND SPEED = 76 MPH
EXPOSURE CATEGORY D

FATIGUE: FATIGUE CATEGORY I
NATURAL WIND GUST = 11.2 MPH

SOIL: SEE SOIL CONDITIONS TABLE ON STD DWG SN 16D
TOP 1.5D (CONCRETE SHAFT) OF COHESIVE SOILS
DOES NOT CONTRIBUTE IN EMBEDMENT CALCULATIONS

SN 16 SERIES STD DWGS GENERAL NOTES:

1. USE STRUCTURAL STEEL CONFORMING TO ASTM A 36.
2. USE BOLTS, NUTS, AND WASHERS CONFORMING TO ASTM F3125, GRADE A325.
3. SAW CUT OR SHEAR PLATES. NO FLAME CUTTING IS ALLOWED.
4. MEET AASHTO M 111 (ASTM A 123) FOR GALVANIZING AFTER FABRICATION IS COMPLETED.
5. REFER TO STD DWG SN 2A AND 2B FOR SIGN HEIGHT AND SIGN OFFSET REQUIREMENTS.
6. SEE TABLES ON STD DWG SN 16B AND 16C FOR POST SIZES.
7. SEE STD DWG SN 16E, SN 16F, AND SN 16G FOR COMPONENT AND ASSEMBLY DETAILS FOR MULTI-DIRECTIONAL BREAKAWAY SYSTEMS.
8. SUPPLIER SUPPLIES FOUNDATION TEMPLATE.
9. SEE STD DWG SN 15A FOR SIGN FRAME DETAILS AND STD DWG SN 15D FOR SIGN BRACKET DETAILS.

DESIGN-ONLY NOTES:

A. USE A MINIMUM "B" OF 7 FT BETWEEN POSTS.

NO.	DATE	APPR.	REMARKS

REVISIONS

UTAH DEPARTMENT OF TRANSPORTATION
STANDARD DRAWINGS FOR ROAD AND BRIDGE CONSTRUCTION
SALT LAKE CITY, UTAH

RECOMMENDED FOR APPROVAL — JAN. 01, 2017 DATE
CHAIRMAN STANDARDS COMMITTEE APPROVED — JAN. 01, 2017 DATE
DEPUTY DIRECTOR

MULTI-DIRECTIONAL BREAKAWAY BASE FOR STEEL I-BEAM SUPPORTS, GENERAL REQUIREMENTS
STANDARD DRAWING TITLE

STD. DWG. NO.
SN 16A

28-NOV-2016 DGN File:L:\Standard Drawings\Imperial\2017 Approved\1-All Drawings\SN16A.dgn

STEEL I-BEAM POST SELECTION TABLE - TWO POSTS

H	U	SIGN PANEL WIDTH, W										
		6'	7'	8'	9'	10'	11'	12'	13'	14'	15'	16'
4'	8'	W6 x 9	W6 x 9	W6 x 9	W6 x 9	W6 x 9	W6 x 9	W6 x 9	W6 x 9	W6 x 9	W6 x 9	W6 x 9
	9'	W6 x 9	W6 x 9	W6 x 9	W6 x 9	W6 x 9	W6 x 9	W6 x 9	W6 x 9	W6 x 9	W6 x 9	W6 x 9
	10'	W6 x 9	W6 x 9	W6 x 9	W6 x 9	W6 x 9	W6 x 9	W6 x 9	W6 x 9	W6 x 9	W6 x 9	W6 x 9
	11'	W6 x 9	W6 x 9	W6 x 9	W6 x 9	W6 x 9	W6 x 9	W6 x 9	W6 x 9	W6 x 9	W6 x 12	W6 x 12
	12'	W6 x 9	W6 x 9	W6 x 9	W6 x 9	W6 x 9	W6 x 9	W6 x 9	W6 x 12	W6 x 12	W6 x 12	W6 x 12
5'	8'	W6 x 9	W6 x 9	W6 x 9	W6 x 9	W6 x 9	W6 x 9	W6 x 9	W6 x 9	W6 x 9	W6 x 9	W6 x 9
	9'	W6 x 9	W6 x 9	W6 x 9	W6 x 9	W6 x 9	W6 x 9	W6 x 9	W6 x 9	W6 x 9	W6 x 9	W6 x 9
	10'	W6 x 9	W6 x 9	W6 x 9	W6 x 9	W6 x 9	W6 x 9	W6 x 9	W6 x 9	W6 x 12	W6 x 12	W6 x 12
	11'	W6 x 9	W6 x 9	W6 x 9	W6 x 9	W6 x 9	W6 x 12	W6 x 12	W6 x 12	W6 x 12	W6 x 12	W6 x 16
	12'	W6 x 9	W6 x 9	W6 x 9	W6 x 9	W6 x 12	W6 x 12	W6 x 12	W6 x 16	W6 x 16	W6 x 16	W6 x 16
6'	8'	W6 x 9	W6 x 9	W6 x 9	W6 x 9	W6 x 9	W6 x 9	W6 x 9	W6 x 9	W6 x 12	W6 x 12	W6 x 12
	9'	W6 x 9	W6 x 9	W6 x 9	W6 x 9	W6 x 9	W6 x 9	W6 x 9	W6 x 12	W6 x 12	W6 x 12	W6 x 16
	10'	W6 x 9	W6 x 9	W6 x 9	W6 x 9	W6 x 9	W6 x 12	W6 x 12	W6 x 12	W6 x 12	W6 x 16	W6 x 16
	11'	W6 x 9	W6 x 9	W6 x 9	W6 x 12	W6 x 12	W6 x 12	W6 x 16	W6 x 16	W6 x 16	W6 x 16	W6 x 16
	12'	W6 x 9	W6 x 9	W6 x 12	W6 x 12	W6 x 12	W6 x 16	W6 x 16	W6 x 16	W6 x 16	W6 x 16	W8 x 18
7'	8'	W6 x 9	W6 x 9	W6 x 9	W6 x 9	W6 x 9	W6 x 12	W6 x 12	W6 x 12	W6 x 12	W6 x 16	W6 x 16
	9'	W6 x 9	W6 x 9	W6 x 9	W6 x 9	W6 x 12	W6 x 12	W6 x 12	W6 x 12	W6 x 16	W6 x 16	W6 x 16
	10'	W6 x 9	W6 x 9	W6 x 9	W6 x 12	W6 x 12	W6 x 12	W6 x 16	W6 x 16	W6 x 16	W6 x 16	W6 x 16
	11'	W6 x 9	W6 x 12	W6 x 12	W6 x 12	W6 x 16	W6 x 16	W6 x 16	W6 x 16	W6 x 16	W8 x 18	W8 x 18
	12'	W6 x 12	W6 x 12	W6 x 12	W6 x 16	W6 x 16	W6 x 16	W6 x 16	W8 x 18	W8 x 18	W8 x 18	W8 x 18
8'	8'	W6 x 9	W6 x 9	W6 x 9	W6 x 12	W6 x 12	W6 x 12	W6 x 12	W6 x 16	W6 x 16	W6 x 16	W6 x 16
	9'	W6 x 9	W6 x 9	W6 x 9	W6 x 12	W6 x 12	W6 x 12	W6 x 16	W6 x 16	W6 x 16	W6 x 16	W8 x 18
	10'	W6 x 9	W6 x 12	W6 x 12	W6 x 12	W6 x 16	W6 x 16	W6 x 16	W6 x 16	W8 x 18	W8 x 18	W8 x 18
	11'	W6 x 12	W6 x 12	W6 x 16	W6 x 16	W6 x 16	W6 x 16	W8 x 18	W8 x 18	W8 x 18	W8 x 18	W8 x 18
	12'	W6 x 12	W6 x 16	W6 x 16	W6 x 16	W6 x 16	W8 x 18	W8 x 18	W8 x 18	W8 x 18	W8 x 18	W8 x 18
9'	8'	W6 x 9	W6 x 9	W6 x 12	W6 x 12	W6 x 12	W6 x 16	W6 x 16	W6 x 16	W6 x 16	W6 x 16	W8 x 18
	9'	W6 x 9	W6 x 12	W6 x 12	W6 x 12	W6 x 16	W6 x 16	W6 x 16	W6 x 16	W8 x 18	W8 x 18	W8 x 18
	10'	W6 x 12	W6 x 12	W6 x 16	W6 x 16	W6 x 16	W6 x 16	W8 x 18	W8 x 18	W8 x 18	W8 x 18	W8 x 18
	11'	W6 x 12	W6 x 16	W6 x 16	W6 x 16	W8 x 18	W8 x 18	W8 x 18	W8 x 18	W8 x 18	W8 x 18	W8 x 18
	12'	W6 x 16	W6 x 16	W6 x 16	W8 x 18	W8 x 18	W8 x 18	W8 x 18	W8 x 18	W8 x 18	W8 x 18	W8 x 18
10'	8'	W6 x 12	W6 x 12	W6 x 12	W6 x 12	W6 x 16	W6 x 16	W6 x 16	W6 x 16	W8 x 18	W8 x 18	W8 x 18
	9'	W6 x 12	W6 x 12	W6 x 16	W6 x 16	W6 x 16	W6 x 16	W8 x 18	W8 x 18	W8 x 18	W8 x 18	W8 x 18
	10'	W6 x 12	W6 x 16	W6 x 16	W6 x 16	W8 x 18	W8 x 18	W8 x 18	W8 x 18	W8 x 18	W8 x 18	W8 x 18
	11'	W6 x 16	W6 x 16	W6 x 16	W8 x 18	W8 x 18	W8 x 18	W8 x 18	W8 x 18	W8 x 18	W8 x 18	W8 x 18
	12'	W6 x 16	W8 x 18	W8 x 18	W8 x 18	W8 x 18	W8 x 18	W8 x 18	W8 x 18	W8 x 18	W8 x 21	W8 x 21
11'	8'	W6 x 12	W6 x 12	W6 x 16	W6 x 16	W6 x 16	W6 x 16	W8 x 18	W8 x 18	W8 x 18	W8 x 18	W8 x 18
	9'	W6 x 12	W6 x 16	W6 x 16	W6 x 16	W8 x 18	W8 x 18	W8 x 18	W8 x 18	W8 x 18	W8 x 18	W8 x 21
	10'	W6 x 16	W6 x 16	W6 x 16	W8 x 18	W8 x 18	W8 x 18	W8 x 18	W8 x 18	W8 x 18	W8 x 21	W8 x 21
	11'	W6 x 16	W8 x 18	W8 x 18	W8 x 18	W8 x 18	W8 x 18	W8 x 18	W8 x 18	W8 x 21	W8 x 21	W8 x 21
	12'	W8 x 18	W8 x 18	W8 x 18	W8 x 18	W8 x 18	W8 x 18	W8 x 18	W8 x 21	W8 x 21	W10 x 22	W10 x 22
12'	8'	W6 x 12	W6 x 16	W6 x 16	W6 x 16	W8 x 18	W8 x 18	W8 x 18	W8 x 18	W8 x 18	W8 x 21	W8 x 21
	9'	W6 x 16	W6 x 16	W6 x 16	W8 x 18	W8 x 18	W8 x 18	W8 x 18	W8 x 18	W8 x 21	W8 x 21	W8 x 21
	10'	W6 x 16	W8 x 18	W8 x 18	W8 x 18	W8 x 18	W8 x 18	W8 x 18	W8 x 21	W8 x 21	W8 x 21	W8 x 21
	11'	W8 x 18	W8 x 18	W8 x 18	W8 x 18	W8 x 18	W8 x 18	W8 x 18	W8 x 21	W8 x 21	W10 x 22	W10 x 22
	12'	W8 x 18	W8 x 18	W8 x 18	W8 x 18	W8 x 18	W8 x 21	W8 x 21	W8 x 21	W10 x 22	W10 x 22	W10 x 22
13'	8'	W6 x 16	W6 x 16	W6 x 16	W8 x 18	W8 x 18	W8 x 18	W8 x 18	W8 x 21	W8 x 21	W8 x 21	W8 x 21
	9'	W6 x 16	W8 x 18	W8 x 18	W8 x 18	W8 x 18	W8 x 18	W8 x 21	W8 x 21	W8 x 21	W8 x 21	W10 x 22
	10'	W8 x 18	W8 x 18	W8 x 18	W8 x 18	W8 x 18	W8 x 21	W8 x 21	W8 x 21	W8 x 21	W10 x 22	W10 x 22
	11'	W8 x 18	W8 x 18	W8 x 18	W8 x 18	W8 x 18	W8 x 21	W8 x 21	W8 x 21	W10 x 22	W10 x 22	W10 x 22
	12'	W8 x 18	W8 x 18	W8 x 18	W8 x 21	W8 x 21	W8 x 21	W10 x 22	W10 x 22	W10 x 22	W10 x 22	W10 x 22

STEEL I-BEAM POST SELECTION TABLE - TWO POSTS (CONTINUED)

H	U	SIGN PANEL WIDTH, W										
		6'	7'	8'	9'	10'	11'	12'	13'	14'	15'	16'
14'	8'	W6 x 16	W8 x 18	W8 x 18	W8 x 18	W8 x 18	W8 x 21	W8 x 21	W8 x 21	W8 x 21	W10 x 22	W10 x 22
	9'	W8 x 18	W8 x 18	W8 x 18	W8 x 18	W8 x 21	W8 x 21	W8 x 21	W8 x 21	W10 x 22	W10 x 22	W10 x 22
	10'	W8 x 18	W8 x 18	W8 x 18	W8 x 18	W8 x 21	W8 x 21	W8 x 21	W10 x 22	W10 x 22	W10 x 22	W10 x 22
	11'	W8 x 18	W8 x 18	W8 x 18	W8 x 21	W8 x 21	W8 x 21	W10 x 22	W10 x 22	W10 x 22	W10 x 22	W10 x 22
	12'	W8 x 18	W8 x 18	W8 x 21	W8 x 21	W10 x 22	W10 x 22	W10 x 22	W10 x 22	W10 x 22	W10 x 22	W12 x 26
15'	8'	W8 x 18	W8 x 18	W8 x 18	W8 x 21	W8 x 21	W8 x 21	W8 x 21	W10 x 22	W10 x 22	W10 x 22	W10 x 22
	9'	W8 x 18	W8 x 18	W8 x 18	W8 x 21	W8 x 21	W8 x 21	W10 x 22	W10 x 22	W10 x 22	W10 x 22	W10 x 22
	10'	W8 x 18	W8 x 18	W8 x 21	W8 x 21	W8 x 21	W10 x 22	W10 x 22	W10 x 22	W10 x 22	W10 x 22	W10 x 22
	11'	W8 x 18	W8 x 18	W8 x 21	W8 x 21	W10 x 22	W10 x 22	W10 x 22	W10 x 22	W10 x 22	W10 x 22	W10 x 22
	12'	W8 x 18	W8 x 21	W8 x 21	W10 x 22	W10 x 22	W10 x 22	W10 x 22	W10 x 22	W12 x 26	W12 x 26	W12 x 26
16'	8'	W8 x 18	W8 x 18	W8 x 21	W8 x 21	W8 x 21	W10 x 22	W10 x 22	W10 x 22	W10 x 22	W10 x 22	W10 x 22
	9'	W8 x 18	W8 x 18	W8 x 21	W8 x 21	W8 x 21	W10 x 22	W10 x 22	W10 x 22	W10 x 22	W10 x 22	W10 x 22
	10'	W8 x 18	W8 x 21	W8 x 21	W8 x 21	W10 x 22	W10 x 22	W10 x 22	W10 x 22	W10 x 22	W10 x 22	W10 x 22
	11'	W8 x 18	W8 x 21	W8 x 21	W10 x 22	W10 x 22	W10 x 22	W10 x 22	W10 x 22	W12 x 26	W12 x 26	W12 x 26
	12'	W8 x 21	W8 x 21	W10 x 22	W10 x 22	W10 x 22	W10 x 22	W10 x 22	W12 x 26	W12 x 26	W12 x 26	W12 x 26
17'	8'	W8 x 18	W8 x 21	W8 x 21	W8 x 21	W10 x 22	W10 x 22	W10 x 22	W10 x 22	W10 x 22	W10 x 22	W10 x 22
	9'	W8 x 18	W8 x 21	W8 x 21	W10 x 22	W10 x 22	W10 x 22	W10 x 22	W10 x 22	W10 x 22	W10 x 22	W10 x 22
	10'	W8 x 18	W8 x 21	W8 x 21	W10 x 22	W10 x 22	W10 x 22	W10 x 22	W10 x 22	W12 x 26	W12 x 26	W12 x 26
	11'	W8 x 21	W8 x 21	W10 x 22	W10 x 22	W10 x 22	W10 x 22	W10 x 22	W12 x 26	W12 x 26	W12 x 26	W12 x 26
	12'	W8 x 21	W10 x 22	W10 x 22	W10 x 22	W10 x 22	W12 x 26	W12 x 26	W12 x 26	W12 x 26	W12 x 26	W12 x 26
18'	8'	W8 x 21	W8 x 21	W8 x 21	W10 x 22	W10 x 22	W10 x 22	W10 x 22	W10 x 22	W10 x 22	W12 x 26	W12 x 26
	9'	W8 x 21	W8 x 21	W10 x 22	W10 x 22	W10 x 22	W10 x 22	W10 x 22	W10 x 22	W10 x 22	W12 x 26	W12 x 26
	10'	W8 x 21	W8 x 21	W10 x 22	W10 x 22	W10 x 22	W10 x 22	W10 x 22	W12 x 26	W12 x 26	W12 x 26	W12 x 26
	11'	W8 x 21	W10 x 22	W10 x 22	W10 x 22	W10 x 22	W12 x 26	W12 x 26	W12 x 26	W12 x 26	W12 x 26	W12 x 26
	12'	W10 x 22	W10 x 22	W10 x 22	W10 x 22	W12 x 26	W12 x 26	W12 x 26	W12 x 26	W12 x 26	W12 x 26	W12 x 26
19'	8'	W8 x 21	W8 x 21	W10 x 22	W10 x 22	W10 x 22	W10 x 22	W10 x 22	W10 x 22	W12 x 26	W12 x 26	W12 x 26
	9'	W8 x 21	W10 x 22	W10 x 22	W10 x 22	W10 x 22	W10 x 22	W10 x 22	W12 x 26	W12 x 26	W12 x 26	W12 x 26
	10'	W8 x 21	W10 x 22	W10 x 22	W10 x 22	W10 x 22	W12 x 26	W12 x 26	W12 x 26	W12 x 26	W12 x 26	W12 x 26
	11'	W10 x 22	W10 x 22	W10 x 22	W10 x 22	W12 x 26	W12 x 26	W12 x 26	W12 x 26	W12 x 26	W12 x 26	W12 x 26
	12'	W10 x 22	W10 x 22	W10 x 22	W12 x 26	W12 x 26	W12 x 26	W12 x 26	W12 x 26	W12 x 26	W12 x 26	W14 x 30
20'	8'	W8 x 21	W10 x 22	W10 x 22	W10 x 22	W10 x 22	W10 x 22	W12 x 26	W12 x 26	W12 x 26	W12 x 26	W12 x 26
	9'	W8 x 21	W10 x 22	W10 x 22	W10 x 22	W10 x 22	W12 x 26	W12 x 26	W12 x 26	W12 x 26	W12 x 26	W12 x 26
	10'	W8 x 21	W10 x 22	W10 x 22	W10 x 22	W12 x 26	W12 x 26	W12 x 26	W12 x 26	W12 x 26	W12 x 26	W12 x 26
	11'	W10 x 22	W10 x 22	W10 x 22	W12 x 26	W12 x 26	W12 x 26	W12 x 26	W12 x 26	W12 x 26	W12 x 26	W14 x 30
	12'	W10 x 22	W10 x 22	W12 x 26	W12 x 26	W12 x 26	W12 x 26	W12 x 26	W12 x 26	W14 x 30	W14 x 30	W14 x 30
21'	8'	W10 x 22	W10 x 22	W10 x 22	W10 x 22	W10 x 22	W12 x 26	W12 x 26	W12 x 26	W12 x 26	W12 x 26	W12 x 26
	9'	W10 x 22	W10 x 22	W10 x 22	W10 x 22	W12 x 26	W12 x 26	W12 x 26	W12 x 26	W12 x 26	W12 x 26	W14 x 30
	10'	W10 x 22	W10 x 22	W10 x 22	W12 x 26	W12 x 26	W12 x 26	W12 x 26	W12 x 26	W12 x 26	W14 x 30	W14 x 30
	11'	W10 x 22	W10 x 22	W12 x 26	W12 x 26	W12 x 26	W12 x 26	W12 x 26	W12 x 26	W14 x 30	W14 x 30	W14 x 30
	12'	W10 x 22	W12 x 26	W12 x 26	W12 x 26	W12 x 26	W12 x 26	W12 x 26	W14 x 30	W14 x 30	W14 x 30	W14 x 30
22'	8'	W10 x 22	W10 x 22	W10 x 22	W10 x 22	W12 x 26	W12 x 26	W12 x 26	W12 x 26	W12 x 26	W14 x 30	W14 x 30
	9'	W10 x 22	W10 x 22	W10 x 22	W12 x 26	W12 x 26	W12 x 26	W12 x 26	W12 x 26	W14 x 30	W14 x 30	W14 x 30
	10'	W10 x 22	W10 x 22	W12 x 26	W12 x 26	W12 x 26	W12 x 26	W12 x 26	W12 x 26	W14 x 30	W14 x 30	W14 x 30
	11'	W10 x 22	W12 x 26	W12 x 26	W12 x 26	W12 x 26	W12 x 26	W12 x 26	W14 x 30	W14 x 30	W14 x 30	W14 x 30
	12'	W10 x 22	W12 x 26	W12 x 26	W12 x 26	W12 x 26	W14 x 30	W14 x 30	W14 x 30	W14 x 30	W14 x 30	W14 x 30

NOTES:

1. SEE STD DWG SN 16A FOR GENERAL NOTES AND DESIGN DATA.

REVISIONS

NO.	DATE	APPR.	REMARKS

UTAH DEPARTMENT OF TRANSPORTATION
STANDARD DRAWINGS FOR ROAD AND BRIDGE CONSTRUCTION
SALT LAKE CITY, UTAH

RECOMMENDED FOR APPROVAL — JAN. 01, 2016 DATE
CHAIRMAN STANDARDS COMMITTEE
APPROVED — JAN. 01, 2016 DATE
DEPUTY DIRECTOR

MULTI-DIRECTIONAL BREAKAWAY BASE FOR STEEL I-BEAM SIGN SUPPORTS, TWO POSTS

STANDARD DRAWING TITLE

STD. DWG. NO.
SN 16B

STEEL I-BEAM POST SELECTION TABLE
THREE OR FOUR POSTS

H	U	SIGN PANEL WIDTH, W			
		17'	18' - 24'	25'	26' - 32'
4'	8'	W6 x 9	W6 x 9	W6 x 9	W6 x 9
	9'	W6 x 9	W6 x 9	W6 x 9	W6 x 9
	10'	W6 x 9	W6 x 9	W6 x 9	W6 x 9
	11'	W6 x 12	W6 x 12	W6 x 12	W6 x 12
	12'	W6 x 12	W6 x 12	W6 x 12	W6 x 12
5'	8'	W6 x 9	W6 x 9	W6 x 9	W6 x 9
	9'	W6 x 9	W6 x 12	W6 x 9	W6 x 12
	10'	W6 x 12	W6 x 12	W6 x 12	W6 x 12
	11'	W6 x 12	W6 x 16	W6 x 12	W6 x 16
	12'	W6 x 16	W6 x 16	W6 x 16	W6 x 16
6'	8'	W6 x 12	W6 x 12	W6 x 12	W6 x 12
	9'	W6 x 12	W6 x 16	W6 x 12	W6 x 16
	10'	W6 x 16	W6 x 16	W6 x 16	W6 x 16
	11'	W6 x 16	W8 x 18	W6 x 16	W8 x 18
	12'	W6 x 16	W8 x 18	W6 x 16	W8 x 18
7'	8'	W6 x 16	W6 x 16	W6 x 16	W6 x 16
	9'	W6 x 16	W6 x 16	W6 x 16	W6 x 16
	10'	W6 x 16	W6 x 16	W6 x 16	W6 x 16
	11'	W8 x 18	W8 x 18	W8 x 18	W8 x 18
	12'	W8 x 18	W8 x 18	W8 x 18	W8 x 18
8'	8'	W6 x 16	W6 x 16	W6 x 16	W6 x 16
	9'	W6 x 16	W8 x 18	W6 x 16	W8 x 18
	10'	W8 x 18	W8 x 18	W8 x 18	W8 x 18
	11'	W8 x 18	W8 x 18	W8 x 18	W8 x 18
	12'	W8 x 18	W8 x 18	W8 x 18	W8 x 18
9'	8'	W6 x 16	W8 x 18	W6 x 16	W8 x 18
	9'	W8 x 18	W8 x 18	W8 x 18	W8 x 18
	10'	W8 x 18	W8 x 18	W8 x 18	W8 x 18
	11'	W8 x 18	W8 x 18	W8 x 18	W8 x 18
	12'	W8 x 18	W8 x 18	W8 x 18	W8 x 18
10'	8'	W8 x 18	W8 x 18	W8 x 18	W8 x 18
	9'	W8 x 18	W8 x 18	W8 x 18	W8 x 18
	10'	W8 x 18	W8 x 18	W8 x 18	W8 x 18
	11'	W8 x 18	W8 x 21	W8 x 18	W8 x 21
	12'	W8 x 21	W8 x 21	W8 x 21	W8 x 21
11'	8'	W8 x 18	W8 x 21	W8 x 18	W8 x 21
	9'	W8 x 21	W8 x 21	W8 x 21	W8 x 21
	10'	W8 x 21	W8 x 21	W8 x 21	W8 x 21
	11'	W8 x 21	W8 x 21	W8 x 21	W8 x 21
	12'	W10 x 22	W10 x 22	W10 x 22	W10 x 22
12'	8'	W8 x 21	W8 x 21	W8 x 21	W8 x 21
	9'	W8 x 21	W8 x 21	W8 x 21	W8 x 21
	10'	W8 x 21	W8 x 21	W8 x 21	W8 x 21
	11'	W10 x 22	W10 x 22	W10 x 22	W10 x 22
	12'	W10 x 22	W10 x 22	W10 x 22	W10 x 22
13'	8'	W8 x 21	W10 x 22	W8 x 21	W10 x 22
	9'	W10 x 22	W10 x 22	W10 x 22	W10 x 22
	10'	W10 x 22	W10 x 22	W10 x 22	W10 x 22
	11'	W10 x 22	W10 x 22	W10 x 22	W10 x 22
	12'	W10 x 22	W10 x 22	W10 x 22	W10 x 22

STEEL I-BEAM POST SELECTION TABLE
THREE OR FOUR POSTS (CONTINUED)

H	U	SIGN PANEL WIDTH, W			
		17'	18' - 24'	25'	26' - 32'
14'	8'	W10 x 22	W10 x 22	W10 x 22	W10 x 22
	9'	W10 x 22	W10 x 22	W10 x 22	W10 x 22
	10'	W10 x 22	W10 x 22	W10 x 22	W10 x 22
	11'	W10 x 22	W10 x 22	W10 x 22	W10 x 22
	12'	W10 x 22	W12 x 26	W10 x 22	W12 x 26
15'	8'	W10 x 22	W10 x 22	W10 x 22	W10 x 22
	9'	W10 x 22	W10 x 22	W10 x 22	W10 x 22
	10'	W10 x 22	W10 x 22	W10 x 22	W10 x 22
	11'	W10 x 22	W12 x 26	W10 x 22	W12 x 26
	12'	W12 x 26	W12 x 26	W12 x 26	W12 x 26
16'	8'	W10 x 22	W10 x 22	W10 x 22	W10 x 22
	9'	W10 x 22	W10 x 22	W10 x 22	W10 x 22
	10'	W10 x 22	W12 x 26	W10 x 22	W12 x 26
	11'	W12 x 26	W12 x 26	W12 x 26	W12 x 26
	12'	W12 x 26	W12 x 26	W12 x 26	W12 x 26
17'	8'	W10 x 22	W10 x 22	W10 x 22	W10 x 22
	9'	W10 x 22	W12 x 26	W10 x 22	W12 x 26
	10'	W12 x 26	W12 x 26	W12 x 26	W12 x 26
	11'	W12 x 26	W12 x 26	W12 x 26	W12 x 26
	12'	W12 x 26	W12 x 26	W12 x 26	W12 x 26
18'	8'	W12 x 26	W12 x 26	W12 x 26	W12 x 26
	9'	W12 x 26	W12 x 26	W12 x 26	W12 x 26
	10'	W12 x 26	W12 x 26	W12 x 26	W12 x 26
	11'	W12 x 26	W12 x 26	W12 x 26	W12 x 26
	12'	W12 x 26	W12 x 26	W12 x 26	W12 x 26
19'	8'	W12 x 26	W12 x 26	W12 x 26	W12 x 26
	9'	W12 x 26	W12 x 26	W12 x 26	W12 x 26
	10'	W12 x 26	W12 x 26	W12 x 26	W12 x 26
	11'	W12 x 26	W12 x 26	W12 x 26	W12 x 26
	12'	W12 x 26	W14 x 30	W12 x 26	W14 x 30
20'	8'	W12 x 26	W12 x 26	W12 x 26	W12 x 26
	9'	W12 x 26	W12 x 26	W12 x 26	W12 x 26
	10'	W12 x 26	W12 x 26	W12 x 26	W12 x 26
	11'	W12 x 26	W14 x 30	W12 x 26	W14 x 30
	12'	W14 x 30	W14 x 30	W14 x 30	W14 x 30
21'	8'	W12 x 26	W12 x 26	W12 x 26	W12 x 26
	9'	W12 x 26	W14 x 30	W12 x 26	W14 x 30
	10'	W14 x 30	W14 x 30	W14 x 30	W14 x 30
	11'	W14 x 30	W14 x 30	W14 x 30	W14 x 30
	12'	W14 x 30	W14 x 30	W14 x 30	W14 x 30
22'	8'	W14 x 30	W14 x 30	W14 x 30	W14 x 30
	9'	W14 x 30	W14 x 30	W14 x 30	W14 x 30
	10'	W14 x 30	W14 x 30	W14 x 30	W14 x 30
	11'	W14 x 30	W14 x 30	W14 x 30	W14 x 30
	12'	W14 x 30	W14 x 30	W14 x 30	W14 x 30

NOTES:

1. SEE STD DWG SN 16A FOR GENERAL NOTES AND DESIGN DATA.

REVISIONS

NO.	DATE	APPR.	REMARKS

UTAH DEPARTMENT OF TRANSPORTATION
STANDARD DRAWINGS FOR ROAD AND BRIDGE CONSTRUCTION
SALT LAKE CITY, UTAH

RECOMMENDED FOR APPROVAL — JAN. 01, 2017 DATE
CHAIRMAN STANDARDS COMMITTEE APPROVED — JAN. 01, 2017 DATE
DEPUTY DIRECTOR

MULTI-DIRECTIONAL BREAKAWAY BASE FOR STEEL I-BEAM SIGN SUPPORTS, THREE AND FOUR POSTS
STANDARD DRAWING TITLE

STD. DWG. NO.
SN 16C

DGN File:L:\Standard Drawings\Imperial\2017 Approved\1-All Drawings\SN16C.dgn

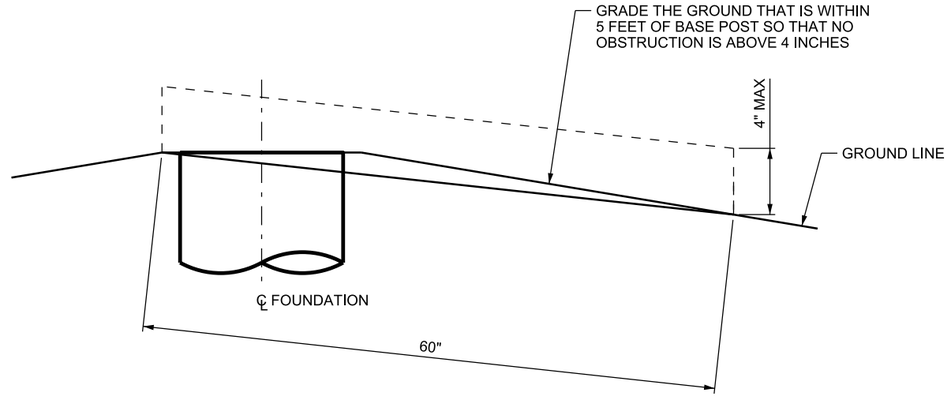

FOUNDATION GRADING DETAIL

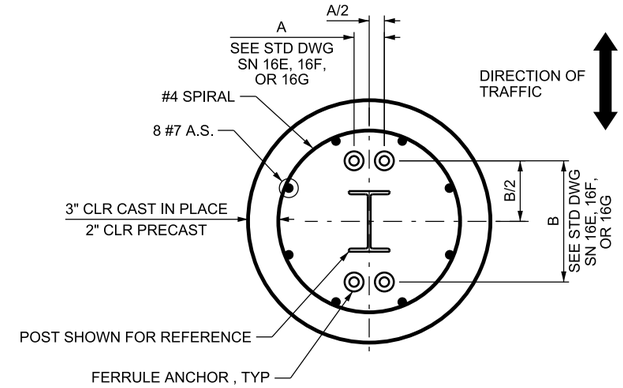

SECTION A-A

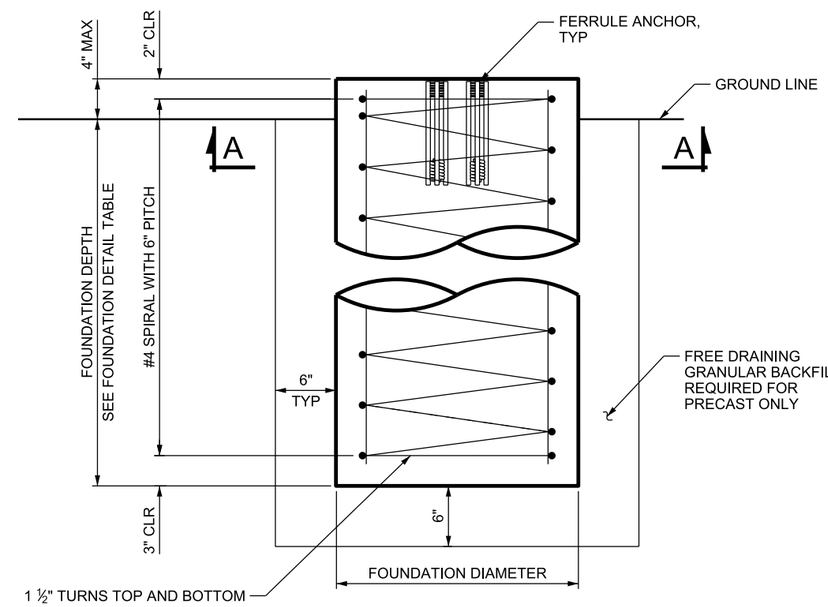

FOUNDATION ELEVATION

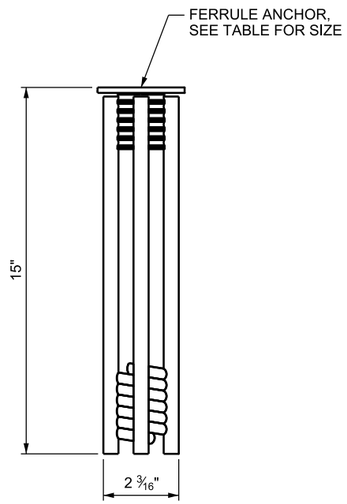

FERRULE ANCHOR

FOUNDATION DETAIL TABLE			
POST SIZE	FERRULE ANCHOR SIZE	FOUNDATION DIAMETER	MINIMUM FOUNDATION DEPTH SOFT OR LOOSE/MEDIUM SOIL
W6x9	5/8"	2'-0"	5'-0"/4'-6"
W6x12	1"	2'-0"	5'-6"/4'-6"
W6x16	1"	2'-0"	6'-0"/5'-0"
W8x18	1"	2'-0"	6'-6"/5'-6"
W8x21	1"	2'-0"	7'-0"/6'-0"
W10x22	1"	2'-6"	8'-0"/6'-6"
W12x26	1"	2'-6"	9'-0"/7'-0"
W14x30	1"	2'-6"	10'-0"/7'-6"

SOIL CONDITIONS TABLE			
SOFT OR LOOSE SOIL		MEDIUM SOIL	
COHESIVE	GRANULAR	COHESIVE	GRANULAR
MOIST UNIT WEIGHT = 110 PCF COHESION (C) = 750 PSF STRAIN FACTOR (E50) = 0.01 SOIL MODULUS (K) = 100 PCI	UNIT WEIGHT = 115 PCF SHEAR STRENGTH = 30° SOIL MODULUS (K) = 50 PCI	MOIST UNIT WEIGHT = 125 PCF COHESION (C) = 1,500 PSF STRAIN FACTOR (E50) = 0.007 SOIL MODULUS (K) = 500 PCI	UNIT WEIGHT = 125 PCF SHEAR STRENGTH = 34° SOIL MODULUS (K) = 90 PCI

NOTES:

1. USE THIS FOUNDATION FOR SIGN BASES B7A, B7B, OR B7C.
2. REFER TO STD DWG SN 16A FOR GENERAL NOTES.
3. USE CONCRETE CLASS AA(AE).
4. USE COATED DEFORMED CARBON STEEL BARS CONFORMING TO AASHTO M111 OR ASTM A775 AND AASHTO M31 GRADE 60, RESPECTIVELY.
5. COAT OR GALAVANIZE FERRULE ANCHORS.
6. VERIFY UTILITY LOCATIONS BEFORE CONSTRUCTION.
7. USE EMBEDMENT VALUES FOR SOFT OF LOOSE SOIL CONDITIONS UNLESS OTHERWISE SPECIFIED.

DESIGN-ONLY NOTES:

A. USE FOUNDATION DEPTH FOR SOFT OR LOOSE SOIL CONDITIONS UNLESS GEOTECHNICAL ENGINEER RECOMMENDS THAT THE SITE MEETS OR EXCEEDS THE MEDIUM SOIL CONDITIONS.

B. REFER TO THE AASHTO ROADSIDE DESIGN GUIDE (CHAPTER 4) FOR BREAKAWAY SUPPORT STUB HEIGHT REQUIREMENTS.

REVISIONS

NO.	DATE	APPR.	REMARKS

UTAH DEPARTMENT OF TRANSPORTATION
STANDARD DRAWINGS FOR ROAD AND BRIDGE CONSTRUCTION
SALT LAKE CITY, UTAH

RECOMMENDED FOR APPROVAL — JAN. 01, 2017 DATE
CHAIRMAN STANDARDS COMMITTEE — JAN. 01, 2017 DATE
APPROVED — DEPUTY DIRECTOR

MULTI-DIRECTIONAL BREAKAWAY BASE FOR STEEL I-BEAM SIGN SUPPORTS, FOUNDATION DETAILS
STANDARD DRAWING TITLE

STD. DWG. NO.
SN 16D

DGN File:L:\Standard Drawings\Imperial\2017 Approved\1-All Drawings\SN16D.dgn
28-NOV-2016

ITEM	DESCRIPTION	SIZE	SPECIFICATION	QUANTITY/POST
1	BRACKET		ALUMINUM (6061-T6)	2
2	BRACKET HARDWARE ASSEMBLY, INCLUDES:			1
2a	BOLT	1/2"	ASTM A325, GALV. ASTM A153	8
2b	LOCK WASHER	1/2"	ANSI B18-21-1, GALV. ASTM A153	8
2c	NUT	1/2"	ASTM A563 GR. DH, GALV. ASTM A153	8
3	COUPLING AND SPECIAL BOLT ASSEMBLY, INCLUDES:			1
3a	SPECIAL BOLT	5/8"	ASTM A449, GALV. ASTM A153/B695	4
3b	COUPLING	5/8"	AMS 6378D, GALV. ASTM A153, POLYESTER COAT	4
3c	SHIM	14 GAUGE	GALV. STEEL SHEET	2
3d	SHIM	16 GAUGE	GALV. STEEL SHEET	2
4	HINGE ASSEMBLY, INCLUDES:			1
4a	HINGE PLATE	1"	AISI 4130 STEEL, GALV. ASTM A123	4
5	HINGE HARDWARE ASSEMBLY, INCLUDES:			1
5a	BOLT	1/2"	ASTM A325, GALV. ASTM A153	8
5b	LOCK WASHER	1/2"	ANSI B18-21-1, GALV. ASTM A153	8
5c	NUT	1/2"	ASTM A563 GR. DH, GALV. ASTM A153	8
6	ANCHOR ASSEMBLY, INCLUDES:			1
6a	ANCHOR	5/8"	AISI 1038 ROD, AISI 1008 COIL	4

HARDWARE LIST

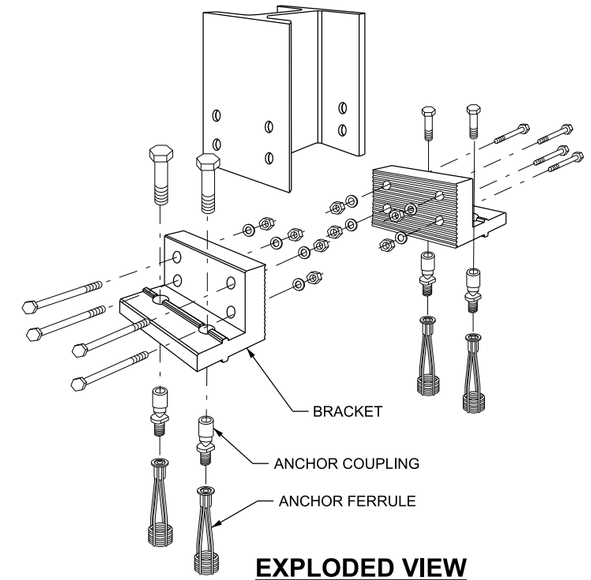

EXPLODED VIEW

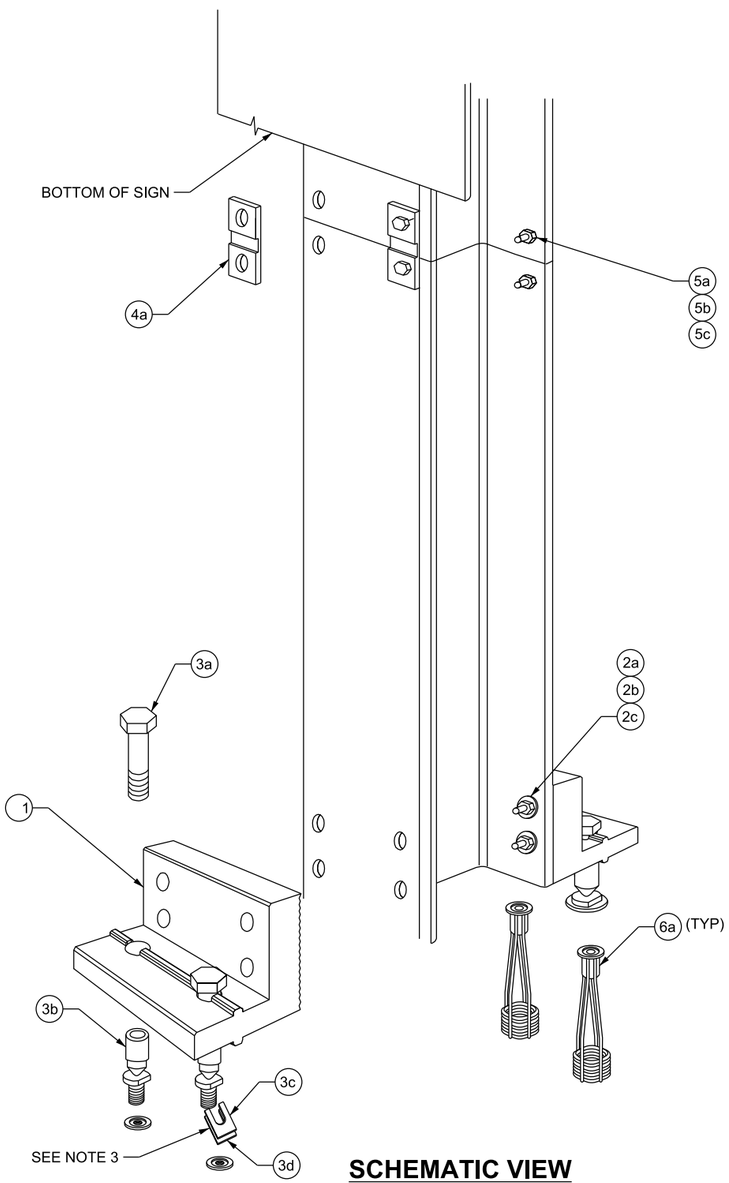

SCHEMATIC VIEW

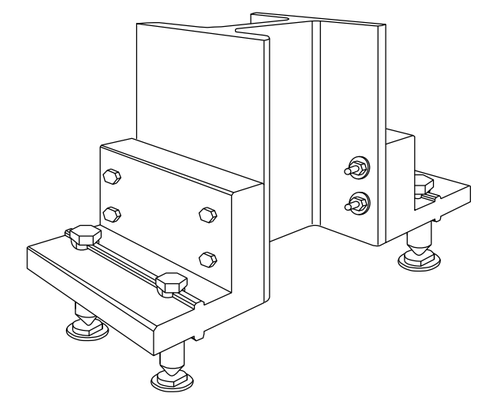

COMPLETED VIEW

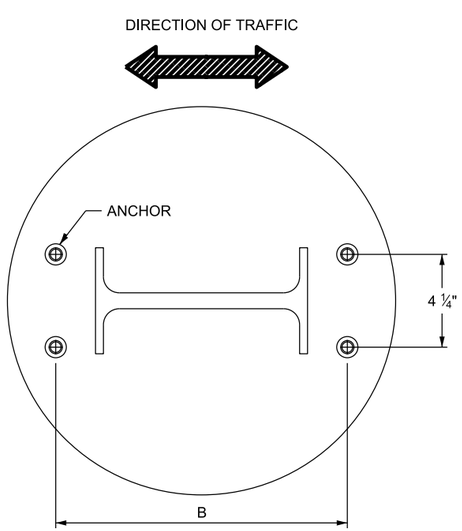

B (BRACKET WIDTH) = DEPTH OF POST + 3 $^{11}/_{16}$"

PLAN VIEW OF FOOTING

NOTES:

1. INSTALL FASTENERS, EXCEPT FOR SPECIAL BOLT AND COUPLING, WITH LOCKWASHERS. FASTENERS DO NOT HAVE SPECIFIC TORQUE REQUIREMENTS. MAKE FASTENERS TIGHT AS POSSIBLE WITH CONVENTIONAL WRENCHES UNLESS NOTED OTHERWISE.
2. DO NOT USE MORE THAN TWO SHIMS UNDERNEATH ANY ONE COUPLING AND NO MORE THAN THREE SHIMS UNDERNEATH ANY TWO COUPLINGS.
3. SEE STD DWG SN 16A THRU SN 16D FOR POST AND FOUNDATION REQUIREMENTS.
4. USE ON W6X9 POSTS.

DESIGN-ONLY NOTES:

A. CONFORM TO THE AASHTO STANDARD SPECIFICATIONS FOR STRUCTURAL SUPPORTS FOR HIGHWAY SIGNS, LUMINAIRES, AND TRAFFIC SIGNALS.

REVISIONS

NO.	DATE	APPR.	REMARKS

UTAH DEPARTMENT OF TRANSPORTATION
STANDARD DRAWINGS FOR ROAD AND BRIDGE CONSTRUCTION
SALT LAKE CITY, UTAH

RECOMMENDED FOR APPROVAL — JAN. 01, 2017 DATE
CHAIRMAN STANDARDS COMMITTEE APPROVED — JAN. 01, 2017 DATE
DEPUTY DIRECTOR

MULTI-DIRECTIONAL BREAKAWAY BASE FOR SIGN POSTS, (B7A)

STANDARD DRAWING TITLE

STD. DWG. NO.
SN 16E

DGN File: L:\Standard_Drawings\Imperial\2017 Approved\1-All Drawings\SN16E.dgn
28-NOV-2016

HARDWARE LIST

ITEM	DESCRIPTION	SIZE	SPECIFICATOIN	QUANTITY/POST
1	BRACKET		ALUMINUM (6061-T6)	2
2	BRACKET HARDWARE ASSEMBLY, INCLUDES:			1
2a	BOLT	1/2"	ASTM A325, GALV. ASTM A153	4
2b	BOLT	1/2"	ASTM A325, GALV. ASTM A153	4
2c	BOLT	1/2"	ASTM A325, GALV. ASTM A153	4
2d	CAPSCREW	1/2"	ASTM A307, GALV. ASTM A153	4
2e	LOCK WASHER	1/2"	ANSI B18-21-1, GALV. ASTM A153	16
2f	NUT	1/2"	ASTM A563 GR. DH, GALV. ASTM A153	12
2g	SHIM	14 GAUGE	GALV. STEEL SHEET	2
2h	SHIM	16 GAUGE	GALV. STEEL SHEET	2
3	COUPLING AND SPECIAL BOLT ASSEMBLY, INCLUDES:			1
3a	SPECIAL BOLT	1"	ASTM A449, GALV. ASTM A153/B695	4
3b	COUPLING	1"	AMS 6378D, GALV. ASTM A153, POLYESTER COAT	4
4	HINGE ASSEMBLY, INCLUDES:			1
4a	HINGE PLATE		AISI 4130 STEEL, GALV. ASTM A123	4
5	HINGE HARDWARE ASSEBLY, INCLUDES:			1
5a	BOLT	3/4"	ASTM A325, GALV. ASTM A153	8
5b	LOCK WASHER	3/4"	ANSI B18-21-1, GALV. ASTM A153	8
5c	NUT	3/4"	ASTM A325, GALV. ASTM A153	8
6	ANCHOR ASSEMBLY, INCLUDES:			1
6a	ANCHOR	1"	AISI 1045 ROD, AISI 1008 COIL	4

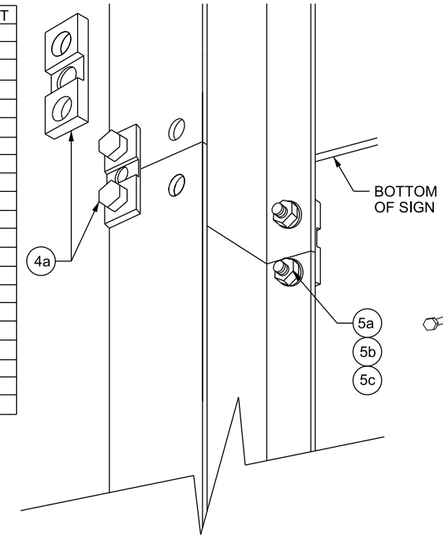

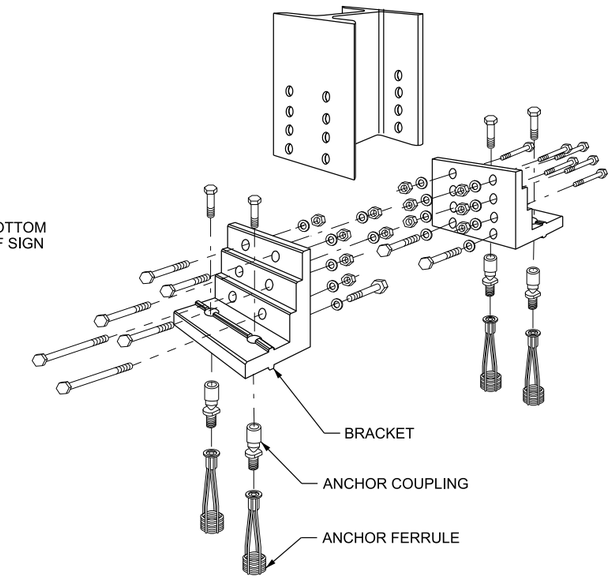

EXPLODED VIEW

$L = L_T - H/2$

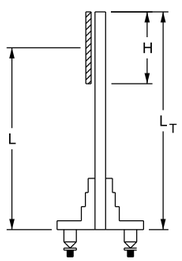

BRACKET SELECTION TABLE

SELECT CORRECT BRACKET NUMBER FROM TABLE, USING THE "L" VALUE FROM THE LONGEST POST. USE FIGURE TO THE LEFT TO DETERMINE "L".

POST SIZE	BRACKET #1		BRACKET #2		BRACKET #3	
	MIN. 'L'	MAX. 'L'	MIN. 'L'	MAX. 'L'	MIN. 'L'	MAX. 'L'
6"	12'	29'	9'	12'	0	9'
8"	14'	29'	10'	14'	0	10'

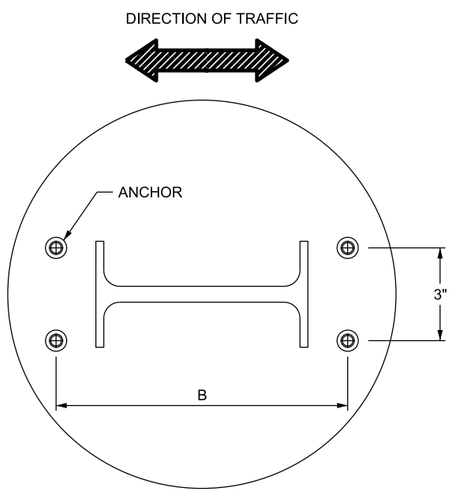

B (BRACKET #1)= DEPTH OF POST + 8"
B (BRACKET #2)= DEPTH OF POST + 8 1/8"
B (BRACKET #3)= DEPTH OF POST + 8 3/16"

PLAN VIEW OF FOOTING

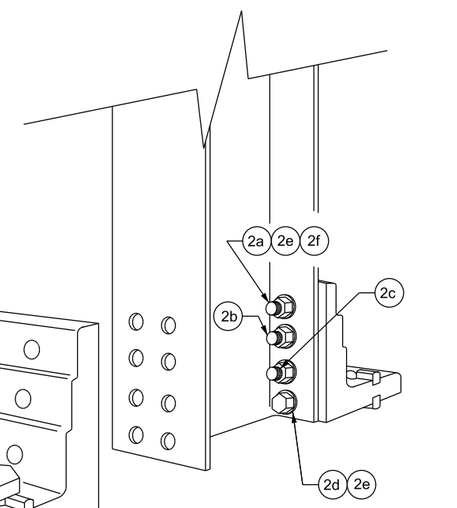

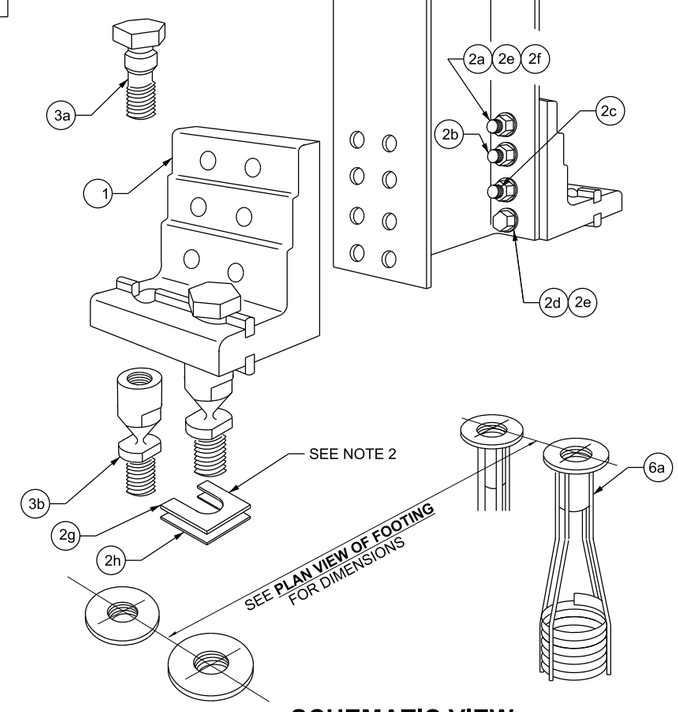

SCHEMATIC VIEW

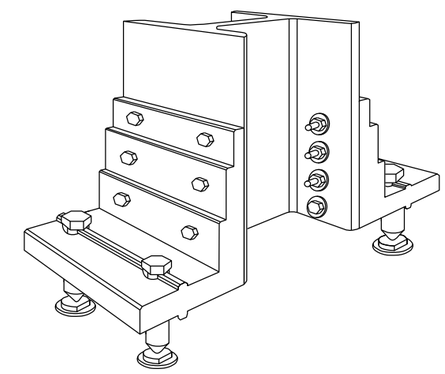

COMPLETED VIEW

NOTES:

1. INSTALL FASTENERS, EXCEPT FOR SPECIAL BOLT AND COUPLING, WITH LOCKWASHERS. FASTENERS DO NOT HAVE SPECIFIC TORQUE REQUIREMENTS. MAKE FASTENERS TIGHT AS POSSIBLE WITH CONVENTIONAL WRENCHES UNLESS NOTED OTHERWISE.
2. DO NOT USE MORE THAN TWO SHIMS UNDERNEATH ANY ONE COUPLING AND NO MORE THAN THREE SHIMS UNDERNEATH ANY TWO COUPLINGS.
3. SEE STD DWG SN 16A THRU SN 16D FOR POST AND FOUNDATION REQUIREMENTS.
4. USE ON W6X12, W6X16, W8X18, AND W8X21 POSTS.

DESIGN-ONLY NOTES:

A. CONFORM TO AASHTO STANDARD SPECIFICATIONS FOR STRUCTURAL SUPPORTS FOR HIGHWAY SIGNS, LUMINAIRES, AND TRAFFIC SIGNALS.

REVISIONS

NO.	DATE	APPR.	REMARKS

UTAH DEPARTMENT OF TRANSPORTATION
STANDARD DRAWINGS FOR ROAD AND BRIDGE CONSTRUCTION
SALT LAKE CITY, UTAH

RECOMMENDED FOR APPROVAL — JAN. 01, 2017 DATE
CHAIRMAN STANDARDS COMMITTEE APPROVED — JAN. 01, 2017 DATE
DEPUTY DIRECTOR DATE

STANDARD DRAWING TITLE
MULTI-DIRECTIONAL BREAKAWAY BASE FOR SIGN POSTS, (B7B)

STD. DWG. NO.
SN 16F

DGN File:L:\Standard Drawings\Imperial\2017 Approved\1-All Drawings\SN16F.dgn
28-NOV-2016

HARDWARE LIST

ITEM	DESCRIPTION	SIZE	SPECIFICATION	QUANTITY/POST
1	BRACKET		ALUMINUM (6061-T6)	2
2	BRACKET HARDWARE ASSEMBLY, INCLUDES:			1
2a	BOLT	5/8"	ASTM A325, GALV. ASTM A153	4
2b	BOLT	5/8"	ASTM A325, GALV. ASTM A153	4
2c	BOLT	5/8"	ASTM A325, GALV. ASTM A153	4
2d	CAPSCREW	5/8"	ASTM A307, GALV. ASTM A153	4
2e	LOCK WASHER	5/8"	ANSI B18-21-1, GALV. ASTM A153	16
2f	NUT	5/8"	ASTM A563 GR. DH, GALV. ASTM A153	12
2g	SHIM	14 GAUGE	GALV. STEEL SHEET	2
2h	SHIM	16 GAUGE	GALV. STEEL SHEET	2
3	COUPLING AND SPECIAL BOLT ASSEMBLY, INCLUDES:			1
3a	SPECIAL BOLT	1"	ASTM A449, GALV. ASTM A153/B695	4
3b	COUPLING	1"	AMS 6378D, GALV. ASTM A153, POLYESTER COAT	4
4	HINGE ASSEMBLY, INCLUDES:			1
4a	HINGE PLATE		AISI 4130 STEEL, GALV. ASTM A123	4
5	HINGE HARDWARE ASSEMBLY, INCLUDES:			1
5a	BOLT	3/4"	ASTM A325, GALV. ASTM A153	8
5b	LOCK WASHER	3/4"	ANSI B18-21-1, GALV. ASTM A153	8
5c	NUT	3/4"	ASTM A325, GALV. ASTM A153	8
6	ANCHOR ASSEMBLY, INCLUDES:			1
6a	ANCHOR	1"	AISI 1045 ROD, AISI 1008 COIL	4

$L = L_T - H/2$

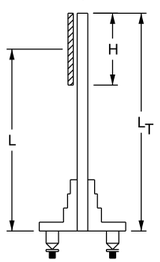

BRACKET SELECTION TABLE

SELECT CORRECT BRACKET NUMBER FROM TABLE, USING THE "L" VALUE FROM THE LONGEST POST. USE FIGURE TO THE LEFT TO DETERMINE "L".

POST SIZE	BRACKET #1		BRACKET #2		BRACKET #3	
	MIN. 'L'	MAX. 'L'	MIN. 'L'	MAX. 'L'	MIN. 'L'	MAX. 'L'
10"	16'	29'	11'	16'	0	11'
12"	18'	29'	13'	18'	0	13'
14"	19'	29'	14'	19'	0	14'

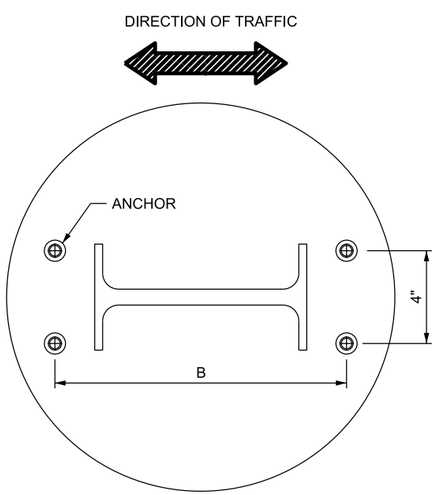

B (BRACKET #1)= DEPTH OF POST + 8"
B (BRACKET #2)= DEPTH OF POST + 8 1/8"
B (BRACKET #3)= DEPTH OF POST + 8 3/16"

PLAN VIEW OF FOOTING

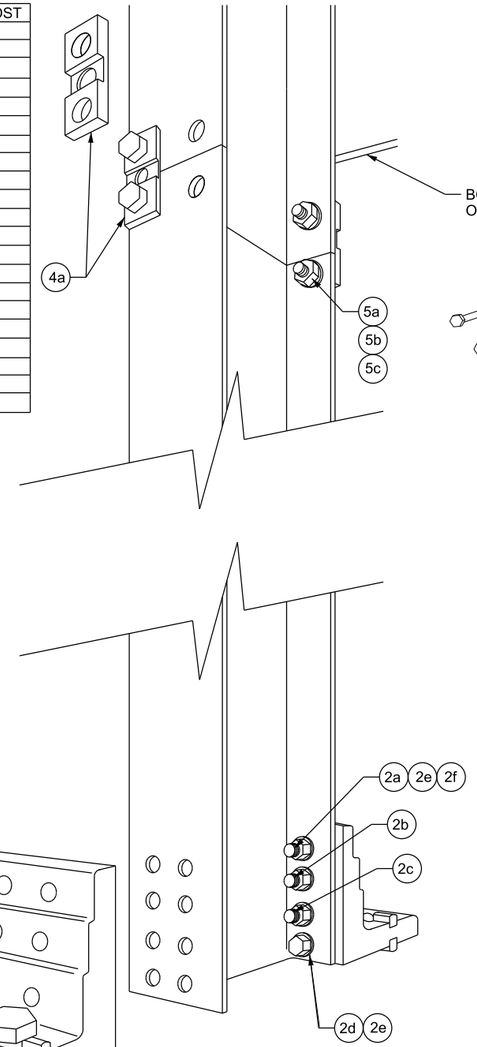

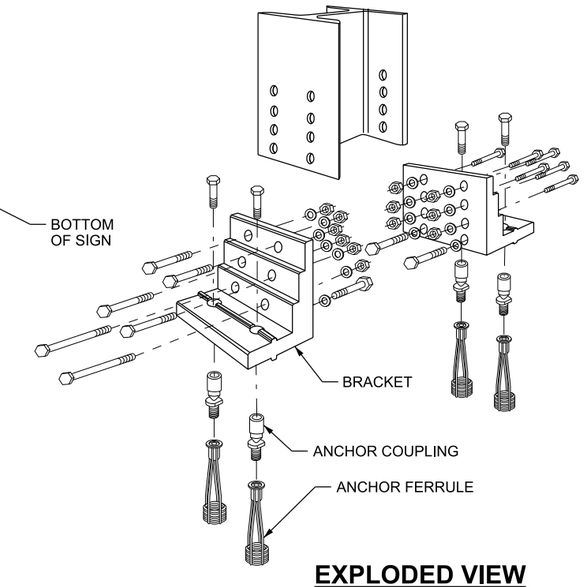

EXPLODED VIEW

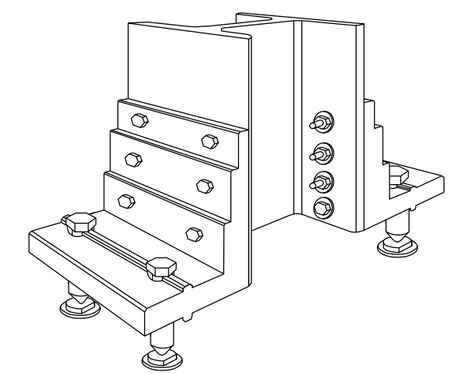

COMPLETED VIEW

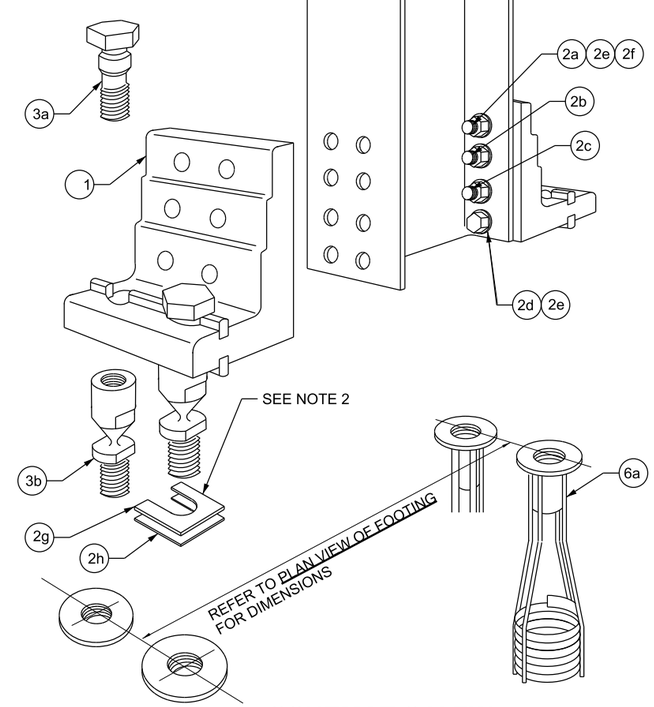

SCHEMATIC VIEW

NOTES:

1. INSTALL FASTENERS, EXCEPT FOR SPECIAL BOLT AND COUPLING, WITH LOCKWASHERS. FASTENERS DO NOT HAVE SPECIFIC TORQUE REQUIREMENTS. MAKE FASTENERS AS TIGHT AS POSSIBLE WITH CONVENTIONAL WRENCHES UNLESS NOTED OTHERWISE.
2. DO NOT USE MORE THAN TWO SHIMS UNDERNEATH ANY ONE COUPLING AND NO MORE THAN THREE SHIMS UNDERNEATH ANY TWO COUPLINGS.
3. SEE STD DWG SN 16A THRU 16D FOR POST AND FOUNDATION REQUIREMENTS.
4. USE ON W10X22, W10X26, W12X26. AND W14X30 POSTS.

DESIGN-ONLY NOTES:

A. CONFORM TO AASHTO STANDARD SPECIFICATIONS FOR STRUCTURAL SUPPORTS FOR HIGHWAY SIGNS, LUMINAIRES, AND TRAFFIC SIGNALS.

REVISIONS

NO.	DATE	APPR.	REMARKS

UTAH DEPARTMENT OF TRANSPORTATION
STANDARD DRAWINGS FOR ROAD AND BRIDGE CONSTRUCTION
SALT LAKE CITY, UTAH

RECOMMENDED FOR APPROVAL — JAN. 01, 2017 DATE
CHAIRMAN STANDARDS COMMITTEE APPROVED — JAN. 01, 2017 DATE
DEPUTY DIRECTOR

MULTI-DIRECTIONAL BREAKAWAY BASE FOR SIGN POSTS, (B7C)

STANDARD DRAWING TITLE

STD. DWG. NO.
SN 16G

28-NOV-2016 DGN Files:L:\Standard Drawings\Imperial\2017 Approved\1-All Drawings\SN16G.dgn

ROUND STEEL PIPE POST SELECTION GUIDE
SINGLE POST APPLICATION

H (feet)	U (feet)	PANEL WIDTH, W (feet)			
		2'	3'	4'	5'
1'	7'	-	-	P3	P3
	8'	-	-	P3	P3
	9'	-	-	P3	P3
	10'	-	-	P3	P3
2'	7'	-	-	P3	P3
	8'	-	-	P3	P3
	9'	-	-	P3	P3.5
	10'	-	-	P3	P3.5
3'	7'	-	-	P3	P3.5
	8'	-	-	P3.5	P3.5
	9'	-	-	P3.5	P3.5
	10'	-	-	P3.5	P4
4'	7'	P3	P3.5	P3.5	P4
	8'	P3	P3.5	P3.5	P4
	9'	P3	P3.5	P4	P4
	10'	P3.5	P3.5	P4	P4.5
5'	7'	P3	P3.5	P4	P4
	8'	P3.5	P3.5	P4	P4.5
	9'	P3.5	P4	P4	P4.5
	10'	P3.5	P4	P4.5	P4.5
6'	7'	P3.5	P4	P4.5	P4.5
	8'	P3.5	P4	P4.5	P4.5-80
	9'	P3.5	P4	P4.5	P4.5-80
	10'	P3.5	P4.5	P4.5-80	P4.5-80
7'	7'	P3.5	P4	P4.5	P4.5-80
	8'	P3.5	P4.5	P4.5-80	P4.5-80
	9'	P4	P4.5	P4.5-80	P4.5-80
	10'	P4	P4.5	P4.5-80	-

POST DETAIL CHART			
POST TYPE	OUTSIDE DIAMETER	WALL THICKNESS	NOMINAL PIPE SIZE
P3.0	2.875"	0.203"	2.5" Sch. 40
P3.5	3.5"	0.216"	3" Sch. 40
P4.0	4.0"	0.226"	3.5" Sch. 40
P4.5	4.5"	0.237"	4" Sch. 40
P4.5-80	4.5"	0.337"	4" Sch. 80

ALL POST MATERIAL IN ACCORDANCE WITH ASTM A53, TYPE E STEEL PIPE, GALVANIZED TO MEET AASHTO M 232.

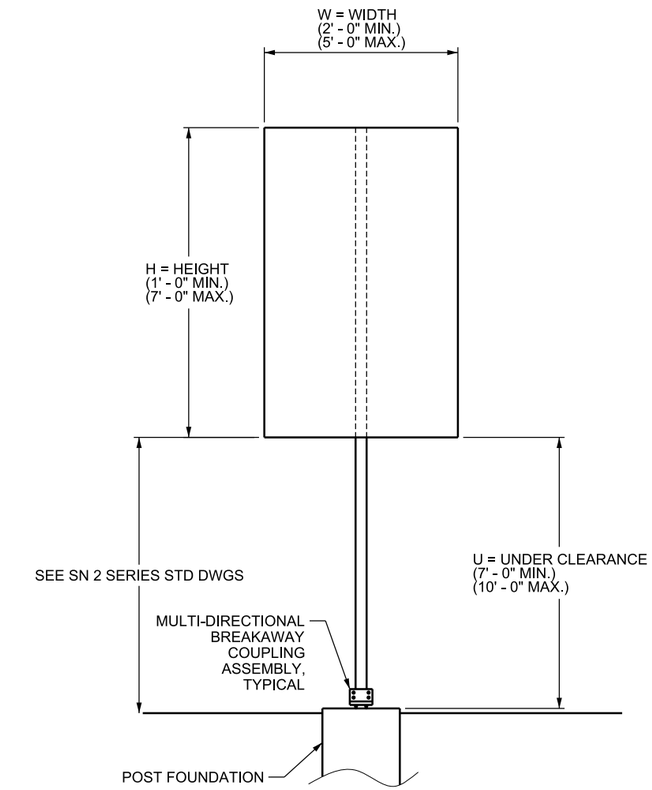

SINGLE POST SIGN ELEVATION VIEW

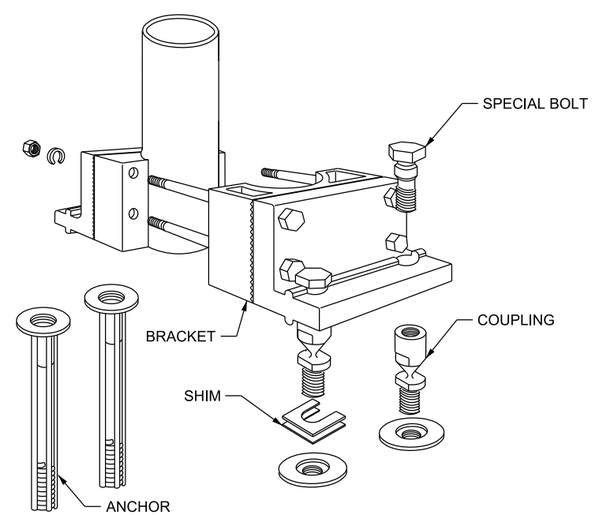

ROUND PIPE SIGN POST

NOTES:

1. DETERMINE THE SIGN DIMENSIONS AND POST HEIGHT REQUIREMENTS. SEE DIAGRAM, THIS SHEET.

   W = SIGN WIDTH (HORIZONTAL DIMENSION), INCLUDING SUPPLEMENTAL SIGN PANELS. ROUND UP TO NEAREST FOOT.

   H = SIGN DEPTH (VERTICAL DIMENSION), INCLUDING SUPPLEMENTAL SIGN PANELS. ROUND UP TO NEAREST FOOT.

   U = UNDER-PANEL HEIGHT (VERTICAL DIMENSION), MEASURED FROM THE TOP OF THE FOUNDATION TO THE BOTTOM OF THE SIGN PANEL. ROUND UP TO NEAREST FOOT.

2. ENTER THE POST SELECTION TABLE WITH THE REQUIRED W, AND H, AND DETERMINE THE APPROPRIATE POST SIZE, WITH THE DETAILS SHOWN IN THE TABLE.

REVISIONS

NO.	DATE	APPR.	REMARKS

UTAH DEPARTMENT OF TRANSPORTATION
STANDARD DRAWINGS FOR ROAD AND BRIDGE CONSTRUCTION
SALT LAKE CITY, UTAH

RECOMMENDED FOR APPROVAL — JAN. 01, 2017 DATE
CHAIRMAN STANDARDS COMMITTEE APPROVED — JAN. 01, 2017 DATE
DEPUTY DIRECTOR

MULTI-DIRECTIONAL BREAKAWAY BASE FOR ROUND AND SQUARE POST, (B7D)
STANDARD DRAWING TITLE

STD. DWG. NO.
SN 17A

DGN File: L:\Standard Drawings\Imperial\2017 Approved\1-All Drawings\SN17A.dgn
28-NOV-2016

ROUND STEEL PIPE POST SELECTION GUIDE
DOUBLE POST APPLICATION

H (feet)	U (feet)	PANEL WIDTH, W (feet, round up to nearest foot)											
		5'	6'	7'	8'	9'	10'	11'	12'	13'	14'	15'	16'
4'	7'	P3	P3	P3.5	P3.5	P3.5	P3.5	P4	P4	P4	P4	P4.5	P4.5
	8'	P3	P3.5	P3.5	P3.5	P4	P4	P4	P4	P4.5	P4.5	P4.5	P4.5
	9'	P3	P3.5	P3.5	P3.5	P4	P4	P4	P4.5	P4.5	P4.5	P4.5	P4.5-80
	10'	P3.5	P3.5	P3.5	P4	P4	P4	P4.5	P4.5	P4.5	P4.5-80	P4.5-80	P4.5-80
	11'	P3.5	P3.5	P4	P4	P4	P4.5	P4.5	P4.5	P4.5-80	P4.5-80	P4.5-80	P4.5-80
	12'	P3.5	P3.5	P4	P4	P4.5	P4.5	P4.5	P4.5-80	P4.5-80	P4.5-80	P4.5-80	-
5'	7'	P3.5	P3.5	P3.5	P4	P4	P4	P4.5	P4.5	P4.5	P4.5	P4.5-80	P4.5-80
	8'	P3.5	P3.5	P3.5	P4	P4	P4.5	P4.5	P4.5	P4.5-80	P4.5-80	P4.5-80	P4.5-80
	9'	P3.5	P3.5	P4	P4	P4.5	P4.5	P4.5	P4.5-80	P4.5-80	P4.5-80	P4.5-80	-
	10'	P3.5	P4	P4	P4.5	P4.5	P4.5	P4.5-80	P4.5-80	P4.5-80	P4.5-80	-	-
	11'	P3.5	P4	P4	P4.5	P4.5	P4.5-80	P4.5-80	P4.5-80	P4.5-80	-	-	
	12'	P4	P4	P4	P4.5	P4.5-80	P4.5-80	P4.5-80	P4.5-80	-	-	-	
6'	7'	P3.5	P3.5	P4	P4	P4.5	P4.5	P4.5	P4.5-80	P4.5-80	P4.5-80	P4.5-80	
	8'	P3.5	P4	P4	P4	P4.5	P4.5	P4.5-80	P4.5-80	P4.5-80	-	-	
	9'	P3.5	P4	P4	P4.5	P4.5	P4.5-80	P4.5-80	P4.5-80	-	-		
	10'	P4	P4	P4.5	P4.5	P4.5	P4.5-80	P4.5-80	-	-			
	11'	P4	P4	P4.5	P4.5	P4.5-80	P4.5-80	-	-	-			
	12'	P4	P4.5	P4.5	P4.5-80	P4.5-80	-	-	-				
7'	7'	P3.5	P4	P4	P4.5	P4.5	P4.5-80	P4.5-80	P4.5-80				
	8'	P4	P4	P4.5	P4.5	P4.5-80	P4.5-80	P4.5-80	-				
	9'	P4	P4	P4.5	P4.5	P4.5-80	P4.5-80	-	-				
	10'	P4	P4.5	P4.5	P4.5-80	P4.5-80	P4.5-80	-					
	11'	P4	P4.5	P4.5-80	P4.5-80	P4.5-80	-	-					
	12'	P4.5	P4.5	P4.5-80	P4.5-80	-	-	-					
8'	7'	P4	P4	P4.5	P4.5	P4.5-80	P4.5-80	P4.5-80					
	8'	P4	P4.5	P4.5	P4.5-80	P4.5-80	P4.5-80	-					
	9'	P4.5	P4.5	P4.5-80	P4.5-80	P4.5-80	-	-					
	10'	P4.5	P4.5	P4.5-80	P4.5-80	-	-						
	11'	P4.5	P4.5-80	P4.5-80	-	-							
	12'	P4.5	P4.5-80	P4.5-80	-	-							
9'	7'	P4.5	P4.5	P4.5	P4.5-80	P4.5-80							
	8'	P4.5	P4.5	P4.5-80	P4.5-80	-							
	9'	P4.5	P4.5-80	P4.5-80	-	-							
	10'	P4.5	P4.5-80	P4.5-80	-								
	11'	P4.5-80	P4.5-80	-	-								
	12'	P4.5-80	-	-	-								
10'	7'	P4.5	P4.5-80	P4.5-80	P4.5-80								
	8'	P4.5	P4.5-80	P4.5-80	-								
	9'	P4.5-80	P4.5-80	-	-								
	10'	P4.5-80	-	-									
	11'	P4.5-80	-										
	12'	-											

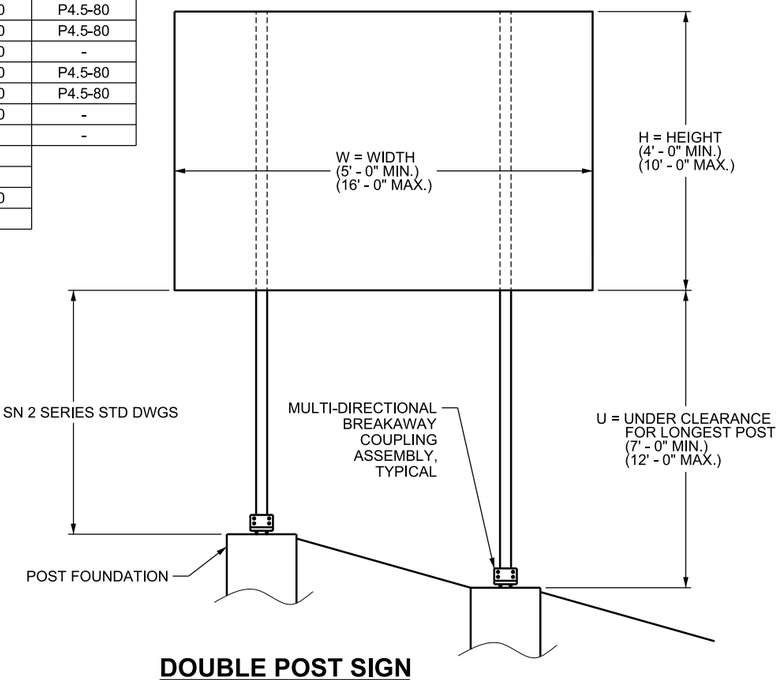

DOUBLE POST SIGN ELEVATION VIEW

POST DETAIL CHART			
POST TYPE	OUTSIDE DIAMETER	WALL THICKNESS	NOMINAL PIPE SIZE
P3.0	2.875"	0.203"	2.5" Sch. 40
P3.5	3.5"	0.216"	3" Sch. 40
P4.0	4.0"	0.226"	3.5" Sch. 40
P4.5	4.5"	0.237"	4" Sch. 40
P4.5-80	4.5"	0.337"	4" Sch. 80

ALL POST MATERIAL ACCORDING TO ASTM A53 STEEL PIPE, GALVANIZED TO MEET AASHTO M 232.

NOTES:

1. DETERMINE THE SIGN DIMENSIONS AND POST HEIGHT REQUIREMENTS. SEE DIAGRAM, THIS SHEET.

   W = SIGN WIDTH (HORIZONTAL DIMENSION), INCLUDING SUPPLEMENTAL SIGN PANELS. ROUND UP TO NEAREST FOOT.

   H = SIGN DEPTH (VERTICAL DIMENSION), INCLUDING SUPPLEMENTAL SIGN PANELS. ROUND UP TO NEAREST FOOT.

   U = UNDER-PANEL HEIGHT (VERTICAL DIMENSION), MEASURED FROM THE TOP OF THE FOUNDATION TO THE BOTTOM OF THE SIGN PANEL AT THE TALLEST POST. ROUND UP TO NEAREST FOOT.

2. ENTER THE POST SELECTION TABLE WITH THE REQUIRED W, AND H, AND DETERMINE THE APPROPRIATE POST SIZE, WITH THE DETAILS SHOWN IN THE TABLE.

REVISIONS

NO.	DATE	APPR.	REMARKS

UTAH DEPARTMENT OF TRANSPORTATION
STANDARD DRAWINGS FOR ROAD AND BRIDGE CONSTRUCTION
SALT LAKE CITY, UTAH

RECOMMENDED FOR APPROVAL — JAN. 01, 2017 DATE
CHAIRMAN STANDARDS COMMITTEE APPROVED — JAN. 01, 2017 DATE
DEPUTY DIRECTOR

MULTI-DIRECTIONAL BREAKAWAY BASE FOR ROUND PIPE DOUBLE POST, (B7D)
STANDARD DRAWING TITLE

STD. DWG. NO.
SN 17B

DGN File:L:\Standard Drawings\Imperial\2017 Approved\1-All Drawings\SN17B.dgn
28-NOV-2016

SQUARE STEEL TUBE POST SELECTION GUIDE
SINGLE POST APPLICATION

H (FEET)	U (FEET)	PANEL WIDTH, W (FEET)			
		2	3	4	5
1	7	-	-	4x4x3/16	4x4x3/16
	8	-	-	4x4x3/16	4x4x3/16
	9	-	-	4x4x3/16	4x4x3/16
	10	-	-	4x4x3/16	4x4x3/16
2	7	-	-	4x4x3/16	4x4x3/16
	8	-	-	4x4x3/16	4x4x3/16
	9	-	-	4x4x3/16	4x4x3/16
	10	-	-	4x4x3/16	4x4x3/16
3	7	-	-	4x4x3/16	4x4x3/16
	8	-	-	4x4x3/16	4x4x3/16
	9	-	-	4x4x3/16	4x4x3/16
	10	-	-	4x4x3/16	4x4x3/16
4	7	4x4x3/16	4x4x3/16	4x4x3/16	4x4x3/16
	8	4x4x3/16	4x4x3/16	4x4x3/16	4x4x3/16
	9	4x4x3/16	4x4x3/16	4x4x3/16	4x4x3/16
	10	4x4x3/16	4x4x3/16	4x4x3/16	4x4x3/16
5	7	4x4x3/16	4x4x3/16	4x4x3/16	4x4x3/16
	8	4x4x3/16	4x4x3/16	4x4x3/16	4x4x3/16
	9	4x4x3/16	4x4x3/16	4x4x3/16	4x4x3/16
	10	4x4x3/16	4x4x3/16	4x4x3/16	4x4x3/16
6	7	4x4x3/16	4x4x3/16	4x4x3/16	4x4x3/16
	8	4x4x3/16	4x4x3/16	4x4x3/16	4x4x3/16
	9	4x4x3/16	4x4x3/16	4x4x3/16	4x4x3/16
	10	4x4x3/16	4x4x3/16	4x4x3/16	4x4x3/16
7	7	4x4x3/16	4x4x3/16	4x4x3/16	4x4x3/16
	8	4x4x3/16	4x4x3/16	4x4x3/16	4x4x3/16
	9	4x4x3/16	4x4x3/16	4x4x3/16	4x4x1/4
	10	4x4x3/16	4x4x3/16	4x4x1/4	4x4x1/4

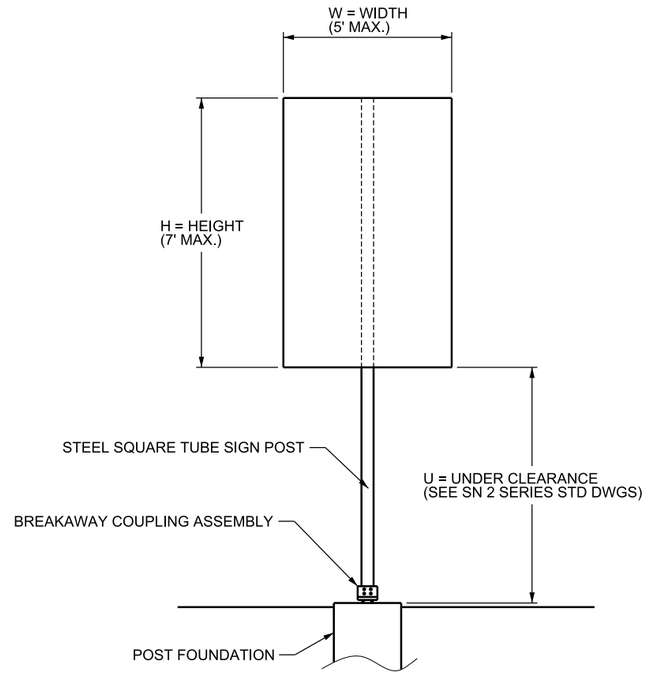

SINGLE POST SIGN ELEVATION VIEW

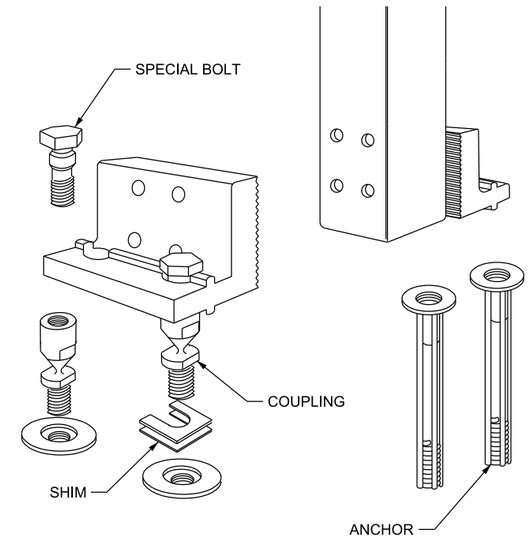

SQUARE TUBE SIGN POST

POST DETAIL CHART			
POST TYPE	OUTSIDE DIMENSIONS	WALL THICKNESS	WEIGHT PER FOOT
4x4x3/16	4"x4"	0.1875"	9.42 lbs/ft
4x4x1/4	4"x4"	0.2500"	12.21 lbs/ft

ALL POST MATERIAL IN ACCORDANCE WITH ASTM A 500, GRADE B STEEL SQUARE TUBE, GALVANIZED TO MEET AASHTO M 232.

NOTES:

1. DETERMINE THE SIGN DIMENSIONS AND POST HEIGHT REQUIREMENTS. SEE DIAGRAM, THIS SHEET.

   W = SIGN WIDTH (HORIZONTAL DIMENSION), INCLUDING SUPPLEMENTAL SIGN PANELS. ROUND UP TO NEAREST FOOT.

   H = SIGN DEPTH (VERTICAL DIMENSION), INCLUDING SUPPLEMENTAL SIGN PANELS. ROUND UP TO NEAREST FOOT.

   U = UNDER-PANEL HEIGHT (VERTICAL DIMENSION), MEASURED FROM THE TOP OF THE FOUNDATION TO THE BOTTOM OF THE SIGN PANEL. ROUND UP TO NEAREST FOOT.

2. ENTER THE POST SELECTION TABLE WITH THE REQUIRED W, H, AND U, AND DETERMINE THE APPROPRIATE POST SIZE, WITH DETAILS SHOWN IN THE TABLE.

REVISIONS

NO.	DATE	APPR.	REMARKS

UTAH DEPARTMENT OF TRANSPORTATION
STANDARD DRAWINGS FOR ROAD AND BRIDGE CONSTRUCTION
SALT LAKE CITY, UTAH

RECOMMENDED FOR APPROVAL — JAN. 01, 2017 DATE
CHAIRMAN STANDARDS COMMITTEE APPROVED — JAN. 01, 2017 DATE
DEPUTY DIRECTOR

MULTI-DIRECTIONAL BREAKAWAY COUPLING SYSTEM FOR SQUARE TUBE SIGN SUPPORTS SINGLE POST
STANDARD DRAWING TITLE

STD. DWG. NO.
SN 17C

DGN File: L:\Standard Drawings\Imperial\2017 Approved\1-All Drawings\SN17C.dgn
28-NOV-2016

SQUARE STEEL TUBE POST SELECTION GUIDE
DOUBLE POST APPLICATION

H (FEET)	U (FEET)	PANEL WIDTH, W (FEET, ROUND UP TO NEAREST FOOT)											
		5	6	7	8	9	10	11	12	13	14	15	16
4	7	4x4x3/16	4x4x3/16	4x4x3/16	4x4x3/16	4x4x3/16	4x4x3/16	4x4x3/16	4x4x3/16	4x4x3/16	4x4x3/16	4x4x3/16	4x4x3/16
	8	4x4x3/16	4x4x3/16	4x4x3/16	4x4x3/16	4x4x3/16	4x4x3/16	4x4x3/16	4x4x3/16	4x4x3/16	4x4x3/16	4x4x3/16	4x4x3/16
	9	4x4x3/16	4x4x3/16	4x4x3/16	4x4x3/16	4x4x3/16	4x4x3/16	4x4x3/16	4x4x3/16	4x4x3/16	4x4x3/16	4x4x3/16	4x4x3/16
	10	4x4x3/16	4x4x3/16	4x4x3/16	4x4x3/16	4x4x3/16	4x4x3/16	4x4x3/16	4x4x3/16	4x4x3/16	4x4x3/16	4x4x3/16	4x4x3/16
	11	4x4x3/16	4x4x3/16	4x4x3/16	4x4x3/16	4x4x3/16	4x4x3/16	4x4x3/16	4x4x3/16	4x4x3/16	4x4x3/16	4x4x3/16	4x4x1/4
	12	4x4x3/16	4x4x3/16	4x4x3/16	4x4x3/16	4x4x3/16	4x4x3/16	4x4x3/16	4x4x3/16	4x4x3/16	4x4x3/16	4x4x1/4	4x4x1/4
5	7	4x4x3/16	4x4x3/16	4x4x3/16	4x4x3/16	4x4x3/16	4x4x3/16	4x4x3/16	4x4x3/16	4x4x3/16	4x4x3/16	4x4x3/16	4x4x3/16
	8	4x4x3/16	4x4x3/16	4x4x3/16	4x4x3/16	4x4x3/16	4x4x3/16	4x4x3/16	4x4x3/16	4x4x3/16	4x4x3/16	4x4x3/16	4x4x1/4
	9	4x4x3/16	4x4x3/16	4x4x3/16	4x4x3/16	4x4x3/16	4x4x3/16	4x4x3/16	4x4x3/16	4x4x3/16	4x4x3/16	4x4x1/4	4x4x1/4
	10	4x4x3/16	4x4x3/16	4x4x3/16	4x4x3/16	4x4x3/16	4x4x3/16	4x4x3/16	4x4x3/16	4x4x3/16	4x4x1/4	4x4x1/4	4x4x1/4
	11	4x4x3/16	4x4x3/16	4x4x3/16	4x4x3/16	4x4x3/16	4x4x3/16	4x4x3/16	4x4x1/4	4x4x1/4	4x4x1/4	4x4x1/4	-
	12	4x4x3/16	4x4x3/16	4x4x3/16	4x4x3/16	4x4x3/16	4x4x3/16	4x4x1/4	4x4x1/4	4x4x1/4	-	-	
6	7	4x4x3/16	4x4x3/16	4x4x3/16	4x4x3/16	4x4x3/16	4x4x3/16	4x4x3/16	4x4x3/16	4x4x3/16	4x4x1/4	4x4x1/4	
	8	4x4x3/16	4x4x3/16	4x4x3/16	4x4x3/16	4x4x3/16	4x4x3/16	4x4x3/16	4x4x3/16	4x4x1/4	4x4x1/4	4x4x1/4	
	9	4x4x3/16	4x4x3/16	4x4x3/16	4x4x3/16	4x4x3/16	4x4x3/16	4x4x3/16	4x4x1/4	4x4x1/4	4x4x1/4	-	
	10	4x4x3/16	4x4x3/16	4x4x3/16	4x4x3/16	4x4x3/16	4x4x3/16	4x4x1/4	4x4x1/4	4x4x1/4	-		
	11	4x4x3/16	4x4x3/16	4x4x3/16	4x4x3/16	4x4x3/16	4x4x1/4	4x4x1/4	4x4x1/4	-			
	12	4x4x3/16	4x4x3/16	4x4x3/16	4x4x3/16	4x4x3/16	4x4x1/4	4x4x1/4	-				
7	7	4x4x3/16	4x4x3/16	4x4x3/16	4x4x3/16	4x4x3/16	4x4x3/16	4x4x3/16	4x4x1/4				
	8	4x4x3/16	4x4x3/16	4x4x3/16	4x4x3/16	4x4x3/16	4x4x3/16	4x4x1/4	4x4x1/4				
	9	4x4x3/16	4x4x3/16	4x4x3/16	4x4x3/16	4x4x3/16	4x4x1/4	4x4x1/4	-				
	10	4x4x3/16	4x4x3/16	4x4x3/16	4x4x3/16	4x4x3/16	4x4x1/4	-					
	11	4x4x3/16	4x4x3/16	4x4x3/16	4x4x3/16	4x4x1/4	4x4x1/4	-					
	12	4x4x3/16	4x4x3/16	4x4x3/16	4x4x1/4	4x4x1/4	-						
8	7	4x4x3/16	4x4x3/16	4x4x3/16	4x4x3/16	4x4x3/16	4x4x3/16						
	8	4x4x3/16	4x4x3/16	4x4x3/16	4x4x3/16	4x4x3/16	4x4x1/4						
	9	4x4x3/16	4x4x3/16	4x4x3/16	4x4x3/16	4x4x1/4	4x4x1/4						
	10	4x4x3/16	4x4x3/16	4x4x3/16	4x4x1/4	4x4x1/4	-						
	11	4x4x3/16	4x4x3/16	4x4x3/16	4x4x1/4	-							
	12	4x4x3/16	4x4x3/16	4x4x1/4	4x4x1/4	-							
9	7	4x4x3/16	4x4x3/16	4x4x3/16	4x4x3/16								
	8	4x4x3/16	4x4x3/16	4x4x3/16	4x4x1/4								
	9	4x4x3/16	4x4x3/16	4x4x3/16	4x4x1/4								
	10	4x4x3/16	4x4x3/16	4x4x1/4	4x4x1/4								
	11	4x4x3/16	4x4x1/4	4x4x1/4	-								
	12	4x4x1/4	4x4x1/4	-	-								
10	7	4x4x3/16	4x4x3/16	4x4x3/16									
	8	4x4x3/16	4x4x3/16	4x4x1/4									
	9	4x4x3/16	4x4x1/4	4x4x1/4									
	10	4x4x3/16	4x4x1/4	4x4x1/4									
	11	4x4x3/16	4x4x1/4	-									
	12	4x4x1/4	-										

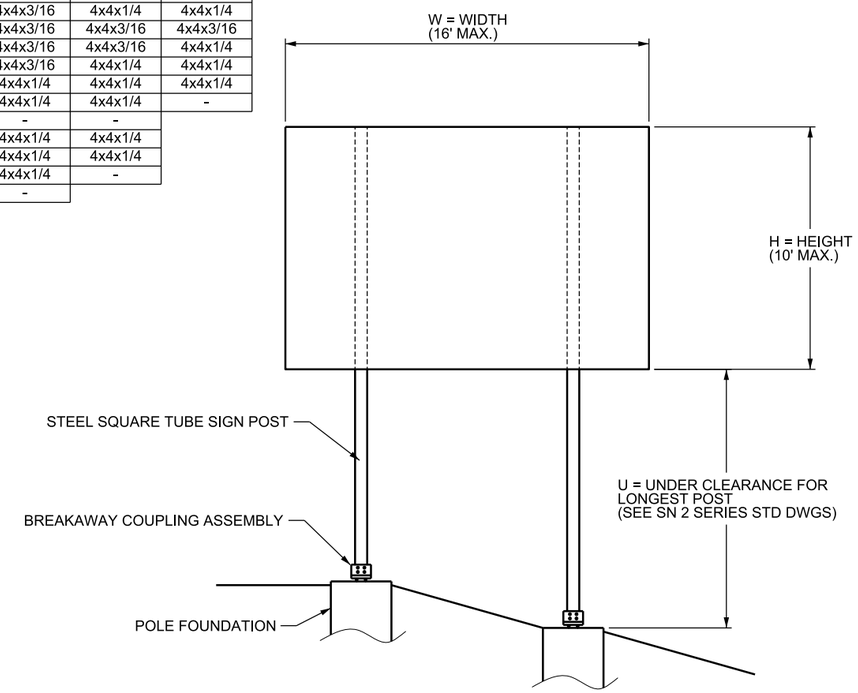

DOUBLE POST SIGN
ELEVATION VIEW

POST DETAIL CHART			
POST TYPE	OUTSIDE DIMENSIONS	WALL THICKNESS	WEIGHT PER FOOT
4x4x3/16	4"x4"	0.1875"	9.42 lbs/ft
4x4x1/4	4"x4"	0.2500"	12.21 lbs/ft

ALL POST MATERIAL IN ACCORDANCE WITH ASTM A 500, GRADE B STEEL SQUARE TUBE, GALVANIZED TO MEET AASHTO M 232.

NOTES:

1. DETERMINE THE SIGN DIMENSIONS AND POST HEIGHT REQUIREMENTS. SEE DIAGRAM, THIS SHEET.

   W = SIGN WIDTH (HORIZONTAL DIMENSION), INCLUDING SUPPLEMENTAL SIGN PANELS. ROUND UP TO NEAREST FOOT.

   H = SIGN DEPTH (VERTICAL DIMENSION), INCLUDING SUPPLEMENTAL SIGN PANELS. ROUND UP TO NEAREST FOOT.

   U = UNDER-PANEL HEIGHT (VERTICAL DIMENSION), MEASURED FROM THE TOP OF THE FOUNDATION TO THE BOTTOM OF THE SIGN PANEL. ROUND UP TO NEAREST FOOT.

2. ENTER THE POST SELECTION TABLE WITH THE REQUIRED W, H, AND U, AND DETERMINE THE APPROPRIATE POST SIZE, WITH DETAILS SHOWN IN THE TABLE.

REVISIONS

NO.	DATE	APPR.	REMARKS

UTAH DEPARTMENT OF TRANSPORTATION
STANDARD DRAWINGS FOR ROAD AND BRIDGE CONSTRUCTION
SALT LAKE CITY, UTAH

RECOMMENDED FOR APPROVAL — JAN. 01, 2017 DATE
CHAIRMAN STANDARDS COMMITTEE APPROVED — JAN. 01, 2017 DATE
DEPUTY DIRECTOR

MULTI-DIRECTIONAL BREAKAWAY COUPLING SYSTEM FOR SQUARE TUBE SIGN SUPPORTS DOUBLE POST
STANDARD DRAWING TITLE

STD. DWG. NO.
SN 17D

28-NOV-2016 DGN File:L:\Standard_Drawings\Imperial\2017 Approved\1-All Drawings\SN17D.dgn

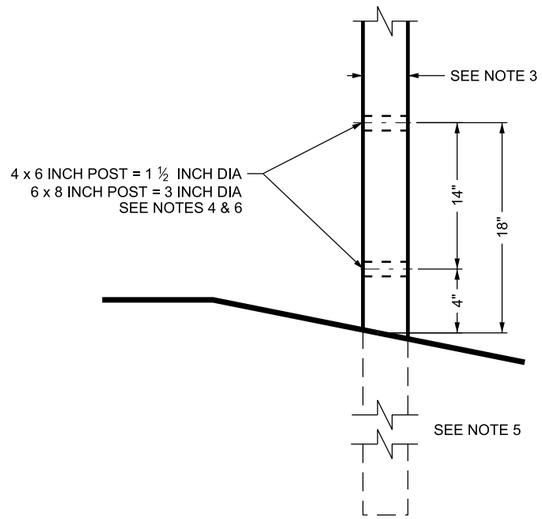

WEAKENED POST DETAIL

SEE NOTE 8

TIMBER SIGN POSTS (NOMINAL)

SIGN HEIGHT (INCHES) \ SIGN WIDTH (INCHES)	12	24	36	48	60	72	84	96	108	120	132	144
12	1 - 4x4 4	1 - 4x4 4	1 - 4x4 4	1 - 4x4 4	2 - 4x4 4	2 - 4x4 4	2 - 4x4 4	2 - 4x4 4	2 - 4x4 4	2 - 4x4 4	2 - 4x4 4	2 - 4x4 4
18	1 - 4x4 4	1 - 4x4 4	1 - 4x4 4	1 - 4x6 4	2 - 4x4 4	2 - 4x4 4	2 - 4x4 4	2 - 4x6 4	2 - 4x6 4	2 - 4x6 4	2 - 4x6 4	2 - 4x6 4
24	1 - 4x4 4	1 - 4x4 4	1 - 4x6 4	1 - 4x6 4	2 - 4x4 4	2 - 4x6 4	2 - 4x6 4	2 - 4x6 4	2 - 4x6 4	2 - 4x6 4	2 - 4x6 4	2 - 4x6 4
30	1 - 4x4 4	1 - 4x4 4	1 - 4x6 4	1 - 4x6 4	2 - 4x6 4	2 - 4x6 4	2 - 4x6 4	2 - 4x6 4	2 - 4x6 4	2 - 4x6 4	3 - 4x6 4	3 - 4x6 4
36	1 - 4x4 4	1 - 4x6 4	1 - 4x6 4	1 - 4x6 4	2 - 4x6 4	2 - 4x6 4	2 - 4x6 4	2 - 4x6 4	3 - 4x6 4	3 - 4x6 4	3 - 4x6 4	3 - 4x6 4
42	1 - 4x4 4	1 - 4x6 4	1 - 4x6 4	1 - 4x6 4	2 - 4x6 4	2 - 4x6 4	2 - 4x6 4	3 - 4x6 4	3 - 4x6 4	3 - 4x6 4	2 - 6x8 5	2 - 6x8 5
48	1 - 4x4 4	1 - 4x6 4	1 - 4x6 4	2 - 4x6 4	2 - 4x6 4	2 - 4x6 4		3 - 4x6 4	3 - 4x6 4	2 - 6x8 5	2 - 6x8 5	2 - 6x8 5
54	1 - 4x4 4	1 - 4x6 4	1 - 6x8 5	2 - 4x6 4	2 - 4x6 4	1 - 6x8 5		2 - 6x8 5	2 - 6x8 5	2 - 6x8 5	2 - 6x8 5	2 - 6x8 5
60	1 - 4x6 4	1 - 4x6 4	1 - 6x8 5	2 - 4x6 4	1 - 6x8 5	1 - 6x8 5		2 - 6x8 5	2 - 6x8 5	2 - 6x8 5	2 - 6x8 5	2 - 6x8 5
66	1 - 4x6 4	1 - 4x6 4	1 - 6x8 5	2 - 4x6 4	1 - 6x8 5			2 - 6x8 5	2 - 6x8 5	2 - 6x8 5	2 - 6x8 5	
72	1 - 4x6 4	1 - 6x8 5	1 - 6x8 5	1 - 6x8 5	1 - 6x8 5			2 - 6x8 5	2 - 6x8 5	2 - 6x8 5		

LEGEND 2 - 4x6 — NUMBER & SIZE (INCH x INCH) OF POSTS
5 — EMBEDMENT DEPTH IN FEET

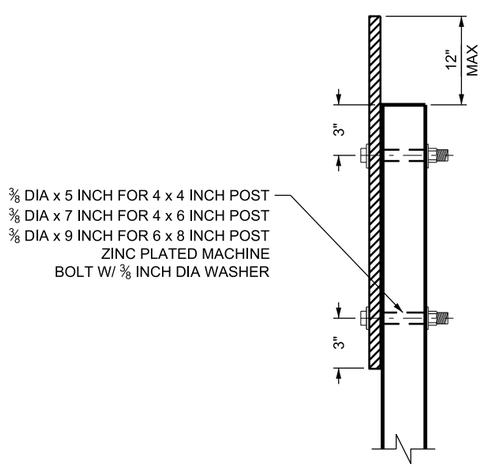

SIDE VIEW

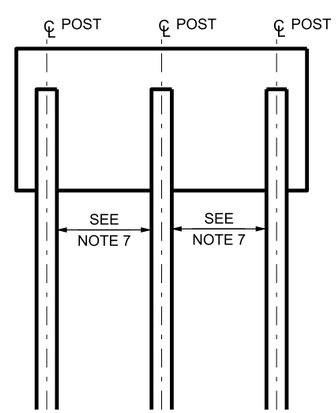

MULTIPLE POST SIGN

NOTES:

1. USE PERMITTED IN WORK ZONES.
   a. INSTALL AFTER NOTICE TO PROCEED IS GIVEN.
   b. REMOVE WHEN DIRECTED BY ENGINEER.
2. USE PERMITTED BY MAINTENANCE IN EMERGENCY SITUATIONS.
   a. USE FOR A MAXIMUM OF 90 DAYS.
3. NARROW POST DIMENSION TO FACE TRAFFIC.
4. USE ONE 4 x 6 INCH POST FOR MULTIPLE SIGN INSTALLATION ON SINGLE POST.
5. MINIMUM DEPTH OF EMBEDMENT: 4 FT UNLESS 5 FT IS SHOWN.
6. FIELD DRILL TWO HOLES IN THE CENTER OF THE POST. DRILL PERPENDICULAR TO THE CENTER LINE OF THE ROAD.
7. MINIMUM SPACING BETWEEN POST:

	POST SIZE	SPACING
FOR 3 OR MORE POSTS	4 x 4 INCH	= 4 FT
FOR 3 OR MORE POSTS	4 x 6 INCH	= 4 FT
FOR 2 OR MORE POSTS	6 x 8 INCH	= 7 FT

8. MEET STANDARD SPECIFICATION 06055.

DESIGN-ONLY NOTES:

A. REFER TO SN SERIES STD DWGS FOR PLACEMENT OF GROUND MOUNTED SIGNS.

B. PERMANENT USE OF TIMBER SIGN POST ONLY PERMITTED WHEN MOUNTING SIGNS FOR:
   a. UNITED STATES FOREST SERVICE
   b. NATIONAL PARKS
   c. SCENIC BYWAYS WHEN PLACED ON AN ADJACENT SUPPLEMENTAL ASSEMBLY NEXT TO THE ROUTE ASSEMBLY THAT IT SUPPLEMENTS

REVISIONS

NO.	DATE	APPR.	REMARKS

UTAH DEPARTMENT OF TRANSPORTATION
STANDARD DRAWINGS FOR ROAD AND BRIDGE CONSTRUCTION
SALT LAKE CITY, UTAH

RECOMMENDED FOR APPROVAL — JAN.01.2017 DATE
CHAIRMAN STANDARDS COMMITTEE APPROVED — JAN.01.2017 DATE
DEPUTY DIRECTOR

GROUND MOUNTED TIMBER SIGN POST

STANDARD DRAWING TITLE

STD. DWG. NO.
SN 18

DGN File: L:\Standard Drawings\Imperial\2017 Approved\1-All Drawings\SN18.dgn
28-NOV-2016

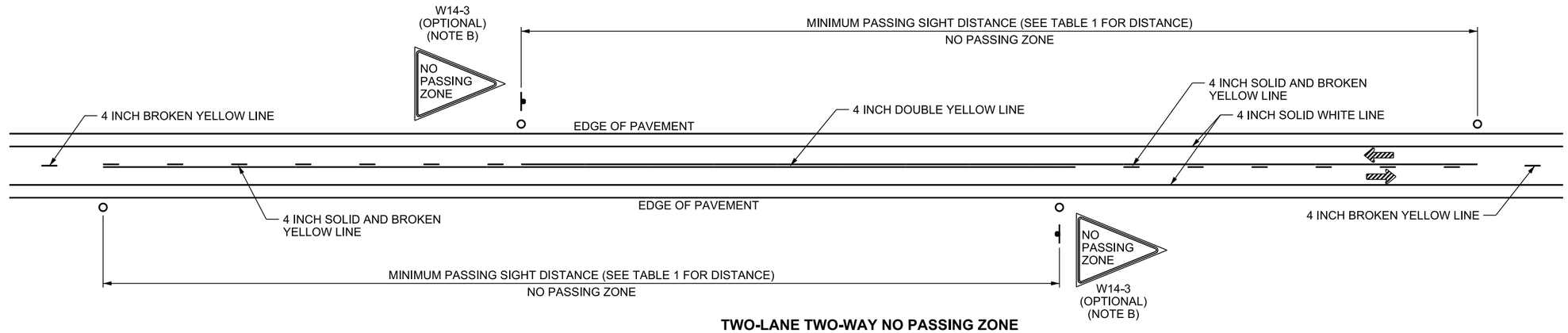

TWO-LANE TWO-WAY NO PASSING ZONE

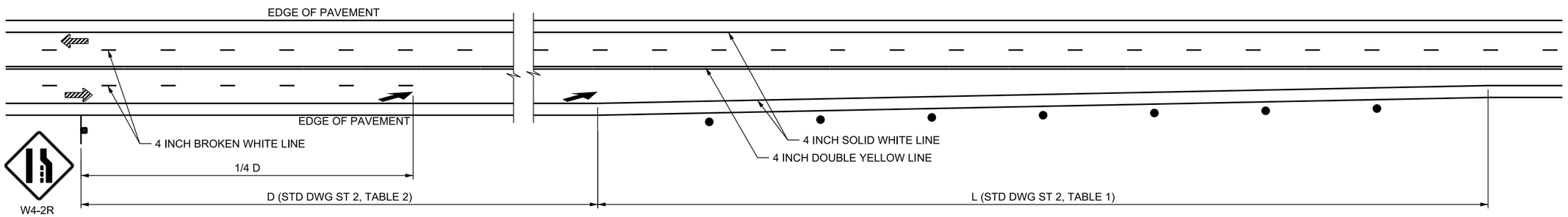

LANE REDUCTION TRANSITION

TABLE 1 - MINIMUM PASSING SIGHT DISTANCES	
SPEED (MPH) (NOTE C)	MINIMUM PASSING SIGHT DISTANCE (FT)
25	450
30	500
35	550
40	620
45	700
50	800
55	900
60	1000
65	1100
70	1200
75	1300
80	1400

PAVEMENT MARKING LINE DIMENSIONS			
TYPE	WIDTH (INCHES)	LENGTH (FT)	GAP (FT)
SOLID LINE	4	CONTINUOUS	N/A
SOLID LINE	8	CONTINUOUS	N/A
BROKEN LINE	4	10	30
LANE DROP	8	3	9
DOTTED LINE	4	2	6
DOTTED LINE	8	2	6

LEGEND:

- ○ ORANGE MAINTENANCE MARKER DELINEATORS (STD DWG GW SERIES)
- ● TYPE I DELINEATORS (MATCH ADJACENT PAVEMENT MARKING COLOR) (STD DWG GW SERIES)
- SIGN, SIGN POST, AND SIGN BASE

DESIGN NOTES:

A. USE THE AASHTO A POLICY ON GEOMETRIC DESIGN OF HIGHWAYS AND STREETS FOR DESIGN OF ROADWAY ELEMENTS NOT SHOWN.

B. REFER TO THE UTAH MANUAL ON UNIFORM TRAFFIC CONTROL DEVICES, SECTION 3B.02 FOR APPLICATION OF PASSING AND NO PASSING ZONES.

C. USE THE GREATER OF (IN ORDER OF PRECEDENCE):
- THE 85TH PERCENTILE SPEED
- OPERATING SPEED DETERMINED BY DESIGN TEAM
- POSTED SPEED

D. USE THE AASHTO ROADSIDE DESIGN GUIDE AND STD DWG DD 17 FOR CLEAR ZONE REQUIREMENTS.

NOTES:

1. PLACE AN EDGE LINE IN AREAS WHERE PAVEMENT EXTENDS TO CURB AND GUTTER, TO DEFINE THE TRAVEL PATH OF A TYPICAL LANE (12 FT WIDE) WHEN THE LATERAL DISTANCE FROM OUTSIDE 4 INCH BROKEN YELLOW LINE OR PERMISSIVE TURN LANE TO LIP OF GUTTER IS 16 FT OR GREATER. THE REGION TRAFFIC ENGINEER CAN AUTHORIZE EXCEPTIONS TO EXCLUDE EDGE LINES IN THESE AREAS.
2. PLACE A YELLOW LINE ON THE LEFT EDGE OF EACH ROADWAY OF DIVIDED ROADS.
3. OBTAIN APPROVAL FROM THE REGION TRAFFIC ENGINEER FOR CHANGES TO EXISTING OR INSTALLATION OF NEW PASSING OR NO PASSING ZONES.
4. SEE GW SERIES STD DWGS FOR DELINEATION HARDWARE.
5. MAINTAIN 4 INCH SPACE BETWEEN TWO 4 INCH SOLID YELLOW LINES OR BETWEEN 4 INCH SOLID YELLOW LINE AND 4 INCH BROKEN YELLOW LINE.
6. LANE REDUCTION ARROW REQUIRED FOR SPEEDS 45 MPH OR GREATER. SEE THE UTAH MANUAL ON UNIFORM TRAFFIC CONTROL DEVICES (MUTCD) FOR DIMENSIONS OF LANE REDUCTION ARROW.

REVISIONS

NO.	DATE	APPR.	REMARKS

UTAH DEPARTMENT OF TRANSPORTATION
STANDARD DRAWINGS FOR ROAD AND BRIDGE CONSTRUCTION
SALT LAKE CITY, UTAH

RECOMMENDED FOR APPROVAL — JAN.01.2017 DATE
CHAIRMAN STANDARDS COMMITTEE APPROVED — JAN.01.2017 DATE
DEPUTY DIRECTOR

TYPICAL PAVEMENT MARKINGS NO PASS ZONE AND LANE REDUCTION

STANDARD DRAWING TITLE

STD. DWG. NO.
ST 1

DGN File:L:\Standard_Drawings\Imperial\2017 Approved\1-All Drawings\ST01.dgn
28-NOV-2016

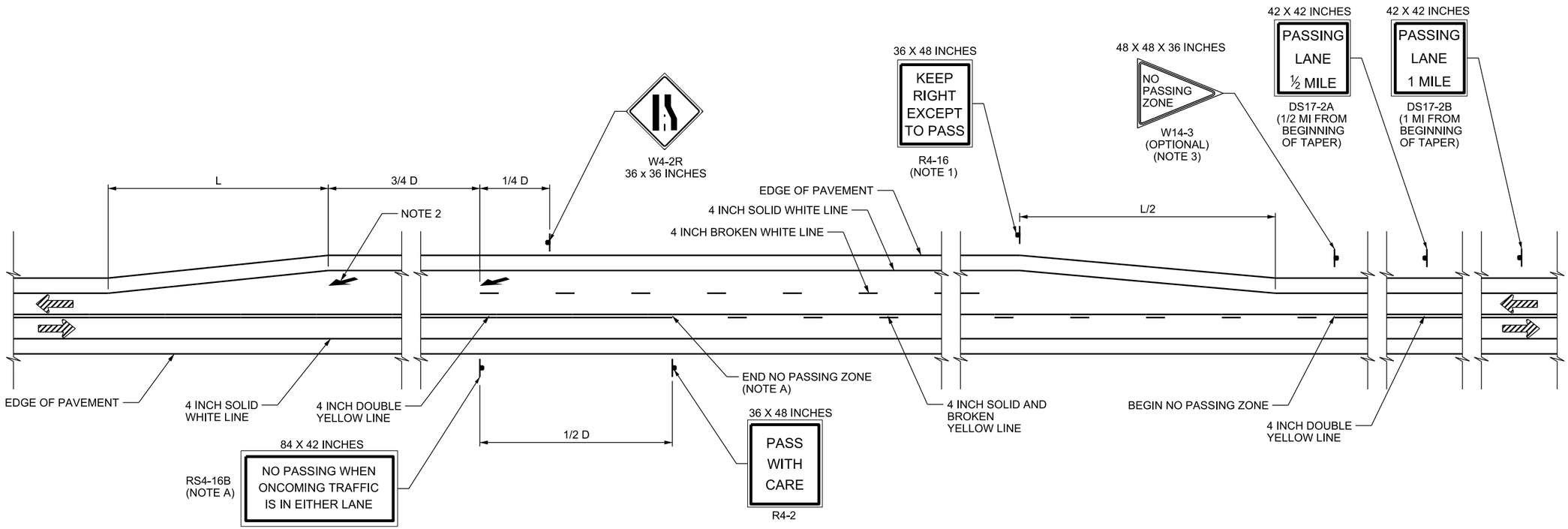

TABLE 1		
SPEED	FORMULA	RATE
LESS THAN 45 MPH	$L = \frac{WS^2}{60}$	$\frac{S^2}{60}:1$
45 MPH AND GREATER	L= WS	S:1

WHERE:
L = TAPER LENGTH IN FEET
W = WIDTH OF OFFSET IN FEET
S = DESIGN SPEED IN MPH

TABLE 2

DESIGN SPEED (MPH)	LRT (SEC)	PRT (SEC)	CALC D (FT)	D (FT)	3/4 D (FT)	1/4 D (FT)
20	6.12	8.28	243.36	245	185	60
25	4.90	9.50	349.2	350	265	85
30	4.08	10.32	455.04	460	345	115
35	3.50	10.90	560.88	565	425	140
40	3.06	11.34	666.72	670	505	165
45	2.72	11.68	772.56	775	580	195
50	2.45	11.95	878.4	880	660	220
55	2.23	12.17	984.24	985	740	245
60	2.04	12.36	1090.08	1095	820	275
65	1.88	12.52	1195.92	1200	900	300
70	1.75	12.65	1301.76	1305	980	325
75	1.63	12.77	1407.6	1410	1060	350
80	1.53	12.87	1513.44	1515	1140	375
85	1.44	12.96	1619.28	1620	1215	405

WHERE:
LRT = LEGIBILITY REDUCTION TIME FOR 180 FT PER UTAH MUTCD
(LRT = 180 FT / 1.47 * DESIGN SPEED)
PRT = PERCEPTION REACTION TIME (PRT = MANEUVER TIME OF 14.4 SEC - LRT),
PER AASHTO DECISION SIGHT DISTANCE MANEUVER E
D = 1.47 * PRT * DESIGN SPEED

DESIGN NOTES:

A. PASSING IN OPPOSITE DIRECTION OF PASSING LANE IS PERMITTED, PROVIDED PASSING ZONE CRITERIA IS MET. SEE UTAH MANUAL ON UNIFORM TRAFFIC CONTROL DEVICES (MUTCD) FOR FURTHER GUIDANCE. USE THE RS4-16B SIGN (WITH APPROVAL OF THE REGION TRAFFIC ENGINEER) AND THE R4-2 SIGN, IF PASSING IN OPPOSITE DIRECTION IS DESIGNED. PLACE AS SHOWN AND REPEAT AT 1 MILE INTERVALS WHEN PASSING LANE EXCEEDS 1 1/2 MILES IN LENGTH.

B. USE THE AASHTO A POLICY ON GEOMETRIC DESIGN OF HIGHWAYS AND STREETS FOR DESIGN OF ROADWAY ELEMENTS NOT SHOWN ON THIS STANDARD DRAWING.

C. CALCULATE CLEAR ZONE FROM SHOULDER LINE OF PASSING LANE USING MAINLINE DESIGN SPEED.

D. USE ONE CONTINUOUS PASSING LANE WHEN TWO OR MORE PASSING LANE SECTIONS ARE IN CLOSE PROXIMITY, AND THE GAP BETWEEN THE SECTIONS WOULD BE LESS THAN 1/2 MILE IN LENGTH.

E. USE A MINIMUM LENGTH OF 1,000 FT FOR PASSING LANES, NOT INCLUDING TAPERS.

F. PROVIDE A MINIMUM OF 1,000 FT PASSING LANE FOR EACH 1 MILE SECTION WHERE THERE IS NO PASSING SIGHT DISTANCE AND DESIGN HOURLY VOLUME EXCEEDS 80 TRUCKS.

G. EXTEND PASSING LANE PER CLIMBING LANE EXTENSION CRITERIA ON STD DWG ST 3A AND ST 3B IF PASSING LANE OCCURS AT THE CREST OF A HILL.

NOTES:

1. REPEAT THE R4-16 SIGN AT 1 MILE INTERVALS WHEN PASSING LANE EXCEEDS 2 MILES IN LENGTH.
2. LANE REDUCTION ARROWS REQUIRED FOR SPEEDS LESS THAN 45 MPH. SEE THE UTAH MANUAL ON UNIFORM TRAFFIC CONTROL DEVICES (MUTCD) DIMENSIONS OF LANE REDUCTION ARROW.
3. PLACE THE W14-3 SIGN ON THE LEFT SHOULDER AT THE BEGINNING OF THE NO PASSING ZONE. SEE THE UTAH MUTCD FOR FURTHER GUIDANCE.
4. SEE STD DWG ST 1 FOR LINE DIMENSIONS.

NO.	DATE	APPR.	REMARKS

REVISIONS

UTAH DEPARTMENT OF TRANSPORTATION
STANDARD DRAWINGS FOR ROAD AND BRIDGE CONSTRUCTION
SALT LAKE CITY, UTAH

RECOMMENDED FOR APPROVAL — JAN.01.2017 DATE
CHAIRMAN STANDARDS COMMITTEE APPROVED — JAN.01.2017 DATE
DEPUTY DIRECTOR

PASSING LANE DETAIL

STANDARD DRAWING TITLE

STD. DWG. NO.
ST 2

28-NOV-2016 DGN File:L:\Standard_Drawings\Imperial\2017 Approved\1-All Drawings\ST02.dgn

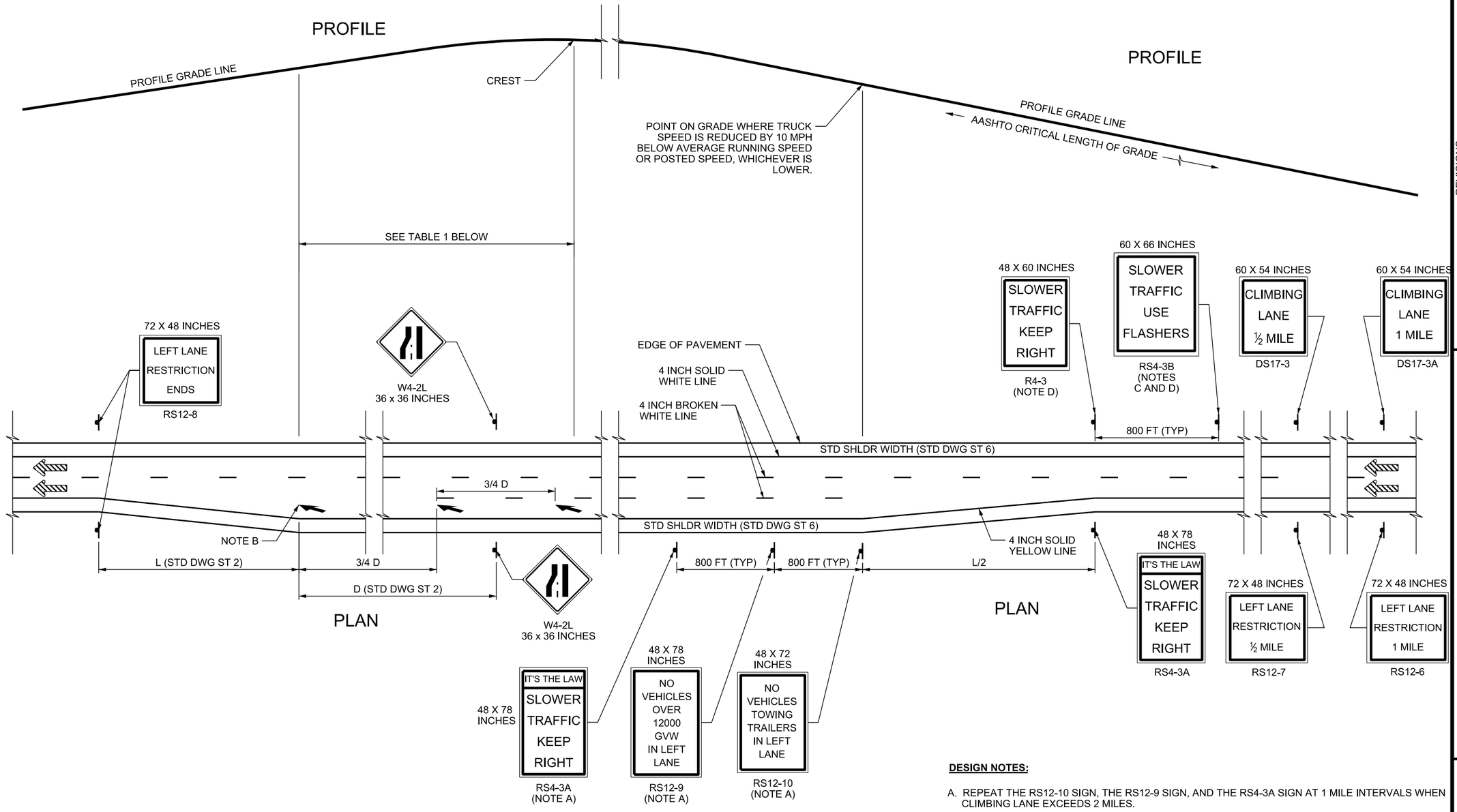

CLIMBING LANE CRITERIA

THE FOLLOWING SHOULD BE EVALUATED TO JUSTIFY THE ADDITION OF A CLIMBING LANE:

1. UPGRADE TRAFFIC FLOW RATE IN EXCESS OF 200 VEHICLES PER HOUR
2. UPGRADE TRUCK FLOW RATE IN EXCESS OF 20 VEHICLES PER HOUR
3. ONE OF THE FOLLOWING CONDITIONS EXISTS:
   A. A 10 MPH OR GREATER SPEED REDUCTION IS EXPECTED FOR A TYPICAL HEAVY TRUCK
   B. LEVEL OF SERVICE E OR F EXISTS ON THE GRADE
   C. A REDUCTION OF TWO OR MORE LEVELS OF SERVICE IS EXPERIENCED WHEN MOVING FROM THE APPROACH SEGMENT TO THE GRADE

TABLE 1 - PASSING / CLIMBING LANE EXTENSION DISTANCE

EXTEND PASSING / CLIMBING LANE THE GREATER OF:

- 300 FT OVER CREST, PROVIDED MINIMUM PASSING SIGHT DISTANCE IS AVAILABLE
- THE POINT WHERE TRUCK SPEED IS WITHIN 10 MPH OF AVERAGE RUNNING SPEED OR POSTED SPEED
- THE POINT WHERE MINIMUM PASSING SIGHT DISTANCE BECOMES AVAILABLE (PASSING LANES)

DESIGN NOTES:

A. REPEAT THE RS12-10 SIGN, THE RS12-9 SIGN, AND THE RS4-3A SIGN AT 1 MILE INTERVALS WHEN CLIMBING LANE EXCEEDS 2 MILES.

B. LANE REDUCTION ARROWS REQUIRED FOR SPEEDS 45 MPH OR GREATER. SEE THE STANDARD HIGHWAY SIGN AND MARKING BOOK FOR DIMENSIONS OF LANE REDUCTION ARROW.

C. USE THE RS4-3B SIGN UPON APPROVAL OF THE REGION TRAFFIC ENGINEER.

D. REPEAT THE R4-3 SIGN, AND THE RS4-3B SIGN, IF USED, AT 1 MILE INTERVALS WHEN CLIMBING LANE EXCEEDS 2 MILES.

E. USE OF INSIDE WIDENING PREFERRED. SEE STD DWG ST 3B FOR OUTSIDE WIDENING DETAILS.

F. USE THE AASHTO A POLICY ON GEOMETRIC DESIGN OF HIGHWAYS AND STREETS FOR DESIGN OF ROADWAY ELEMENTS NOT SHOWN ON THIS STANDARD DRAWING.

G. CALCULATE CLEAR ZONE FROM SHOULDER LINE OF CLIMBING LANE.

H. USE CONTINUOUS CLIMBING LANES WHEN TWO OR MORE CLIMBING LANE SECTIONS ARE JUSTIFIED IN CLOSE PROXIMITY, AND THE GAP BETWEEN THE SECTIONS WOULD BE LESS THAN 1/2 MILE IN LENGTH.

I. USE A MINIMUM LENGTH OF 1,000 FT FOR CLIMBING LANES, NOT INCLUDING TAPERS.

J. SEE STD DWG ST 1 FOR LINE DIMENSIONS.

REVISIONS

NO.	DATE	APPR.	REMARKS

UTAH DEPARTMENT OF TRANSPORTATION
STANDARD DRAWINGS FOR ROAD AND BRIDGE CONSTRUCTION
SALT LAKE CITY, UTAH

RECOMMENDED FOR APPROVAL — JAN.01.2017 DATE
CHAIRMAN STANDARDS COMMITTEE APPROVED — JAN.01.2017 DATE
DEPUTY DIRECTOR

STANDARD DRAWING TITLE
FREEWAY CLIMBING LANE INSIDE WIDENING DETAIL

STD. DWG. NO.
ST 3A

28-NOV-2016 DGN File: L:\Standard Drawings\Imperial\2017 Approved\1-All Drawings\ST03A.dgn

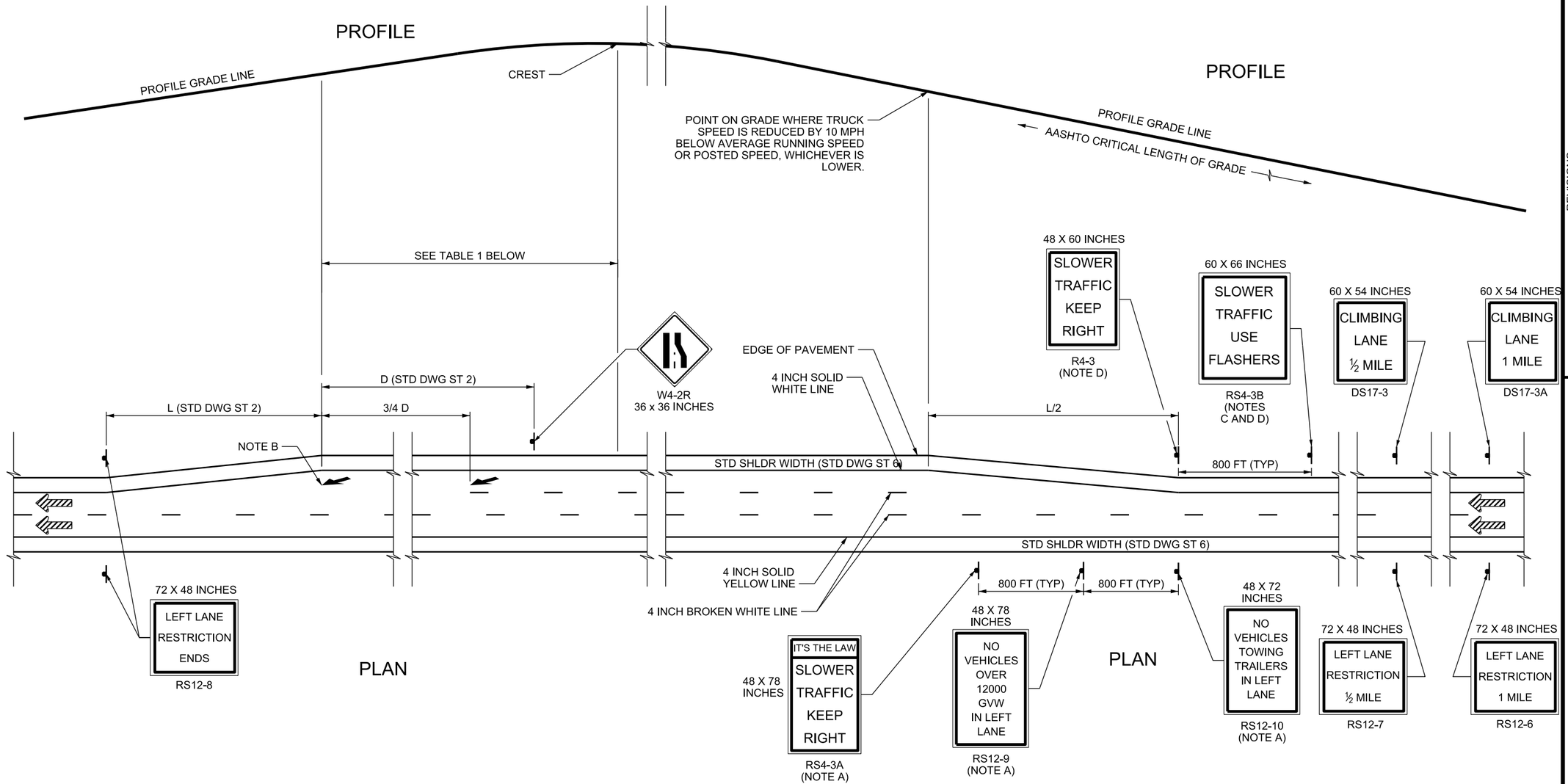

CLIMBING LANE CRITERIA

THE FOLLOWING SHOULD BE EVALUATED TO JUSTIFY THE ADDITION OF A CLIMBING LANE:

1. UPGRADE TRAFFIC FLOW RATE IN EXCESS OF 200 VEHICLES PER HOUR
2. UPGRADE TRUCK FLOW RATE IN EXCESS OF 20 VEHICLES PER HOUR
3. ONE OF THE FOLLOWING CONDITIONS EXISTS:
   A. A 10 MPH OR GREATER SPEED REDUCTION IS EXPECTED FOR A TYPICAL HEAVY TRUCK
   B. LEVEL OF SERVICE E OR F EXISTS ON THE GRADE
   C. A REDUCTION OF TWO OR MORE LEVELS OF SERVICE IS EXPERIENCED WHEN MOVING FROM THE APPROACH SEGMENT TO THE GRADE

TABLE 1 - PASSING / CLIMBING LANE EXTENSION DISTANCE

EXTEND PASSING / CLIMBING LANE THE GREATER OF:

- 300 FT OVER CREST, PROVIDED MINIMUM PASSING SIGHT DISTANCE IS AVAILABLE
- THE POINT WHERE TRUCK SPEED IS WITHIN 10 MPH OF AVERAGE RUNNING SPEED OR POSTED SPEED
- THE POINT WHERE MINIMUM PASSING SIGHT DISTANCE BECOMES AVAILABLE (PASSING LANES)

DESIGN NOTES:

A. REPEAT THE RS12-10 SIGN, THE RS12-9 SIGN, AND THE RS4-3A SIGN AT 1 MILE INTERVALS WHEN CLIMBING LANE EXCEEDS 2 MILES.

B. LANE REDUCTION ARROWS REQUIRED FOR SPEEDS 45 MPH OR GREATER. SEE THE STANDARD HIGHWAY SIGN AND MARKING BOOK FOR DIMENSIONS OF LANE REDUCTION ARROW.

C. USE THE RS4-3B SIGN UPON APPROVAL OF THE REGION TRAFFIC ENGINEER.

D. REPEAT THE R4-3 SIGN, AND THE RS4-3B SIGN, IF USED, AT 1 MILE INTERVALS WHEN CLIMBING LANE EXCEEDS 2 MILES.

E. USE OF INSIDE WIDENING PREFERRED SEE STD DWG ST 3A. USE DETAILS THIS SHEET WHEN CONDITIONS REQUIRE OUTSIDE WIDENING.

F. USE THE AASHTO A POLICY ON GEOMETRIC DESIGN OF HIGHWAYS AND STREETS FOR DESIGN OF ROADWAY ELEMENTS NOT SHOWN ON THIS STANDARD DRAWING.

G. CALCULATE CLEAR ZONE FROM SHOULDER LINE OF CLIMBING LANE.

H. USE CONTINUOUS CLIMBING LANES WHEN TWO OR MORE CLIMBING LANE SECTIONS ARE JUSTIFIED IN CLOSE PROXIMITY, AND THE GAP BETWEEN THE SECTIONS WOULD BE LESS THAN 1/2 MILE IN LENGTH.

I. USE A MINIMUM LENGTH OF 1,000 FT FOR CLIMBING LANES, NOT INCLUDING TAPERS.

J. SEE STD DWG ST 1 FOR LINE DIMENSIONS.

REVISIONS

NO.	DATE	APPR.	REMARKS

UTAH DEPARTMENT OF TRANSPORTATION
STANDARD DRAWINGS FOR ROAD AND BRIDGE CONSTRUCTION
SALT LAKE CITY, UTAH

RECOMMENDED FOR APPROVAL — JAN.01.2017 DATE
CHAIRMAN STANDARDS COMMITTEE APPROVED — JAN.01.2017 DATE
DEPUTY DIRECTOR

STANDARD DRAWING TITLE
FREEWAY CLIMBING LANE OUTSIDE WIDENING DETAIL

STD. DWG. NO.
ST 3B

28-NOV-2016 DGN File: L:\Standard Drawings\Imperial\2017 Approved\1-All Drawings\ST03B.dgn

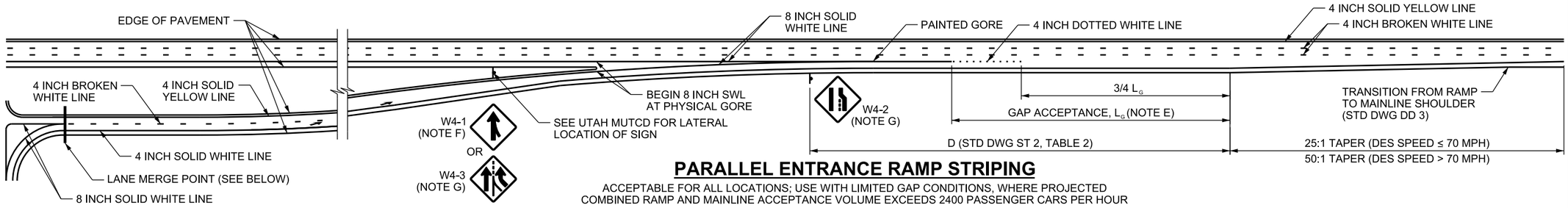

PARALLEL ENTRANCE RAMP STRIPING

ACCEPTABLE FOR ALL LOCATIONS; USE WITH LIMITED GAP CONDITIONS, WHERE PROJECTED COMBINED RAMP AND MAINLINE ACCEPTANCE VOLUME EXCEEDS 2400 PASSENGER CARS PER HOUR

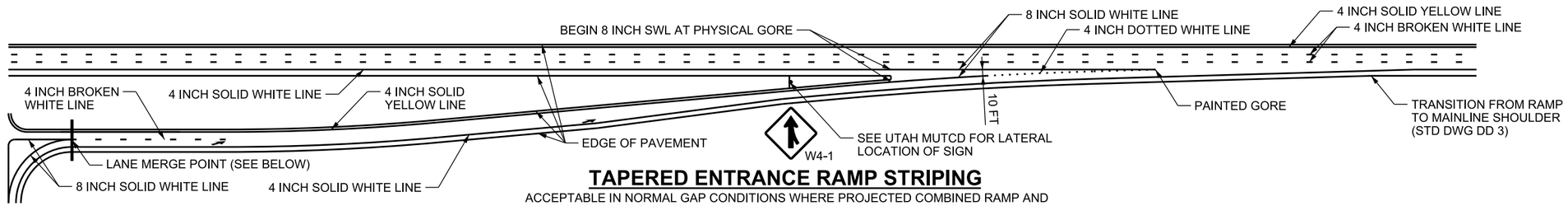

TAPERED ENTRANCE RAMP STRIPING

ACCEPTABLE IN NORMAL GAP CONDITIONS WHERE PROJECTED COMBINED RAMP AND MAINLINE ACCEPTANCE VOLUME IS LESS THAN 2400 PASSENGER CARS PER HOUR

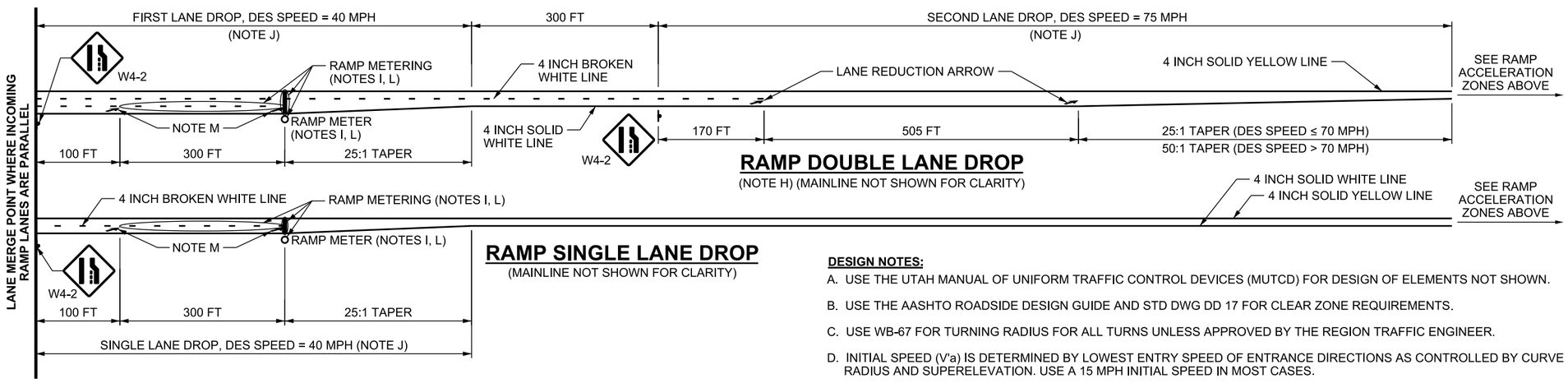

RAMP DOUBLE LANE DROP

(NOTE H) (MAINLINE NOT SHOWN FOR CLARITY)

RAMP SINGLE LANE DROP

(MAINLINE NOT SHOWN FOR CLARITY)

DESIGN NOTES:

A. USE THE UTAH MANUAL OF UNIFORM TRAFFIC CONTROL DEVICES (MUTCD) FOR DESIGN OF ELEMENTS NOT SHOWN.

B. USE THE AASHTO ROADSIDE DESIGN GUIDE AND STD DWG DD 17 FOR CLEAR ZONE REQUIREMENTS.

C. USE WB-67 FOR TURNING RADIUS FOR ALL TURNS UNLESS APPROVED BY THE REGION TRAFFIC ENGINEER.

D. INITIAL SPEED (V'a) IS DETERMINED BY LOWEST ENTRY SPEED OF ENTRANCE DIRECTIONS AS CONTROLLED BY CURVE RADIUS AND SUPERELEVATION. USE A 15 MPH INITIAL SPEED IN MOST CASES.

E. USE A 1200 FT GAP ACCEPTANCE LENGTH IF COMBINED RAMP AND MAINLINE ACCEPTANCE LANE VOLUME IS PROJECTED TO EXCEED 2400 PASSENGER CARS PER HOUR. OTHERWISE, USE A 500 FT LENGTH. SEE THE HIGHWAY CAPACITY MANUAL FOR ADDITIONAL INFORMATION.

F. USE MERGE SIGN (W4-1) WHEN THE FOLLOWING CONDITIONS ARE MET:
1. SINGLE LANE PARALLEL ENTRANCE RAMP
2. LESS THAN 1200 FT (SEE DESIGN NOTE E) GAP ACCEPTANCE IS USED
- DO NOT USE EITHER THE LANE ENDS SIGN (W4-2R) OR THE ADDED LANE SIGN (W4-3) WHEN USING THE W4-1 SIGN

G. USE ADDED LANE SIGN (W4-3) WHEN THE GAP ACCEPTANCE IS GREATER THAN OR EQUAL TO 1200 FT (SEE DESIGN NOTE E)
- DO NOT PLACE LANE ENDS (W4-2) SIGN WITHIN 200 FT OF THE PHYSICAL GORE
- PLACE LANE ENDS SIGN (W4-2) ONLY WHEN USING THE W4-3 SIGN

H. DO NOT DROP MORE THAN TWO LANES ON ANY RAMP. CONTINUE THE ADDITIONAL LANES TO MAINLINE BEYOND THE GAP ACCEPTANCE LENGTH AND DROP PER ST SERIES STD DWGS AND THE UTAH MANUAL ON UNIFORM TRAFFIC CONTROL DEVICES OR DROP AT NEXT EXIT AS AN AUXILLIARY LANE WHEN THREE OR MORE LANES ARE PRESENT ON THE RAMP. SEE THE RAMPS SECTION OF THE AASHTO A POLICY ON GEOMETRIC DESIGN OF HIGHWAYS AND STREETS FOR ADDITIONAL GUIDANCE.

I. WHEN RAMP METER IS USED:
- PLACE THE RAMP METER STOP LINE AT THE CALCULATED QUEUE PER AT SERIES STD DWGS
- USE A STOP CONDITION TO CALCULATE ACCELERATION DISTANCE FROM RAMP METER STOP LINE
- VERIFY RAMP METER STORAGE LENGTHS WITH CENTRAL TRAFFIC OPERATIONS DIVISION

J. DISTANCES FOR LANE DROP LENGTHS WERE DERIVED USING THE FOLLOWING EQUATION:
DIST = 1.47 V (DRT + MT), WHERE V = DESIGN SPEED, DRT = DETECTION AND RECOGNITION TIME (2.5 SEC), AND
MT = MANEUVER TIME (VARIES BETWEEN 3.5 TO 4.5 SEC DEPENDING ON SPEED) - SEE STD DWG DD 4 FOR DESIGN SPEEDS

K. SEE STD DWG ST 1 FOR LINE DIMENSIONS.

L. PLACE ITEMS ONLY WHEN RAMP WILL BE METERED. PLACE STOP LINE AT CALCULATED RAMP METER QUEUE FROM TERMINUS.

M. LANE-REDUCTION ARROWS ARE OPTIONAL FOR SPEEDS LESS THAN 45 MPH.

REVISIONS

NO.	DATE	APPR.	REMARKS

UTAH DEPARTMENT OF TRANSPORTATION
STANDARD DRAWINGS FOR ROAD AND BRIDGE CONSTRUCTION
SALT LAKE CITY, UTAH

RECOMMENDED FOR APPROVAL — JAN.01, 2017 DATE
CHAIRMAN STANDARDS COMMITTEE APPROVED — JAN.01, 2017 DATE
DEPUTY DIRECTOR

STANDARD DRAWING TITLE
ENTRANCE RAMP PAVEMENT MARKINGS

STD. DWG. NO.
ST 4

DGN File:L:\Standard Drawings\Imperial\2017 Approved\1-All Drawings\ST04.dgn
28-NOV-2016

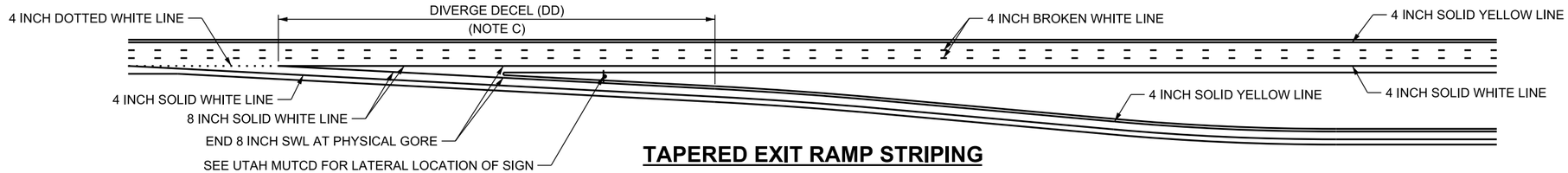

TAPERED EXIT RAMP STRIPING

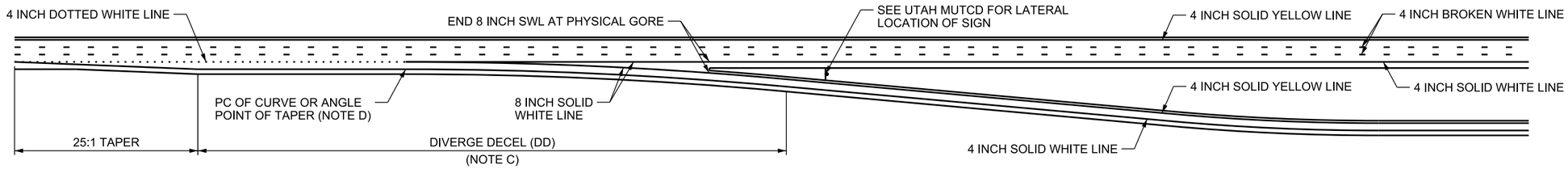

PARALLEL EXIT RAMP STRIPING

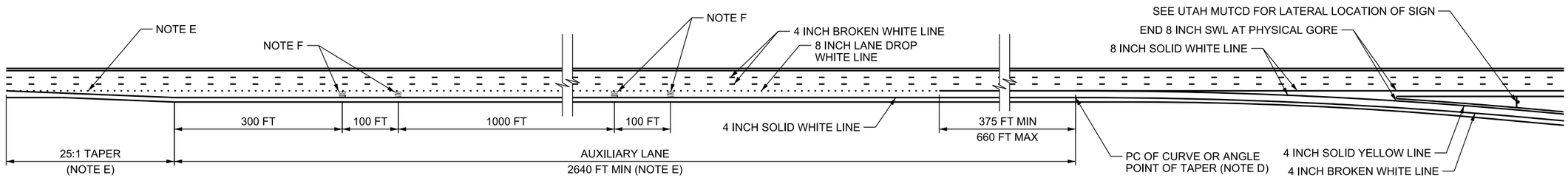

AUXILIARY LANE SINGLE EXIT RAMP

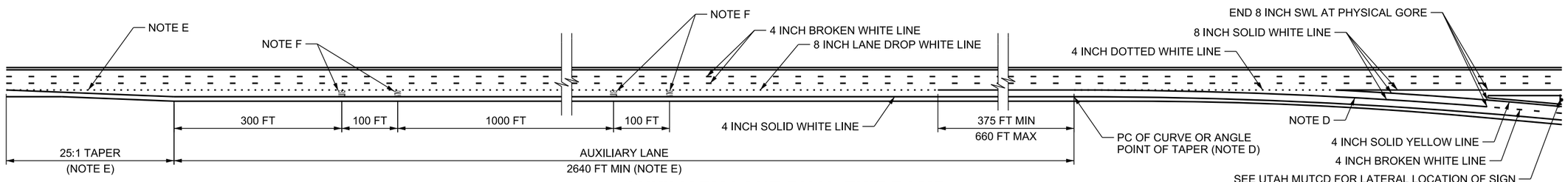

AUXILIARY LANE DUAL EXIT RAMP

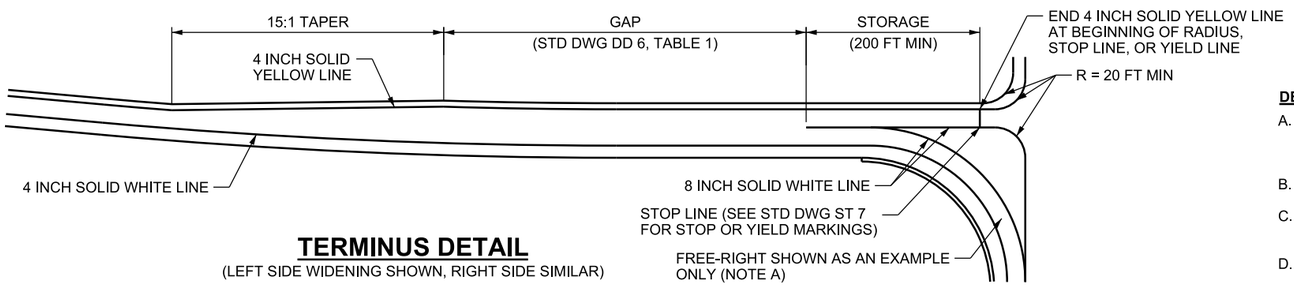

TERMINUS DETAIL

(LEFT SIDE WIDENING SHOWN, RIGHT SIDE SIMILAR)

DESIGN NOTES:

A. USE THE AASHTO A POLICY ON GEOMETRIC DESIGN OF HIGHWAYS AND STREETS AND THE UTAH MANUAL ON UNIFORM TRAFFIC CONTROL DEVICES FOR DESIGN OF ROADWAY ELEMENTS NOT SHOWN ON THIS STANDARD DRAWING.

B. USE WB-67 FOR TURNING RADIUS FOR ALL TURNS UNLESS APPROVED BY THE REGION TRAFFIC ENGINEER.

C. EXTEND DIVERGE DECELERATION DISTANCE A MINIMUM OF 100 FT PAST PHYSICAL GORE. SEE STD DWG DD 5 FOR MINIMUM DISTANCE.

D. USE MINIMUM RADIUS (CENTER OF RAMP LANES) OF 10 MPH LESS THAN MAINLINE DESIGN SPEED AND SUPERELEVATION OF MAINLINE ADJACENT TO RAMP.

E. STRIPE THE ADDITIONAL LANE WITH A 4 INCH BROKEN WHITE LINE BETWEEN THE LANES AND DO NOT INSTALL THE TAPER AS SHOWN IF THE AUXILIARY LANE EXTENDS BEYOND 2640 FT.

F. USE 20 INCH X 10 FT LETTERS FOR "EXIT" AND "ONLY" PAVEMENT MESSAGES.

G. SEE STD DWG ST 1 FOR LINE DIMENSIONS.

REVISIONS

NO.	DATE	APPR.	REMARKS

UTAH DEPARTMENT OF TRANSPORTATION
STANDARD DRAWINGS FOR ROAD AND BRIDGE CONSTRUCTION
SALT LAKE CITY, UTAH

RECOMMENDED FOR APPROVAL — JAN.01.2017 DATE
CHAIRMAN STANDARDS COMMITTEE APPROVED — JAN.01.2017 DATE
DEPUTY DIRECTOR

STANDARD DRAWING TITLE
EXIT RAMP
PAVEMENT MARKINGS

STD. DWG. NO.
ST 5

DGN File:L:\Standard Drawings\Imperial\2017 Approved\1-All Drawings\ST05.dgn
28-NOV-2016

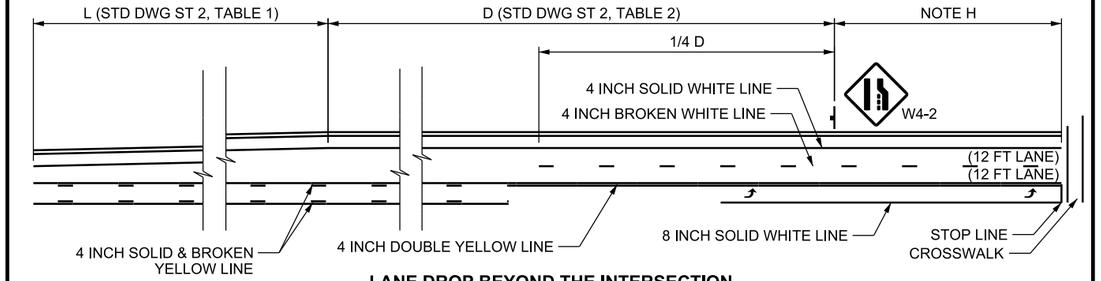

LANE DROP BEYOND THE INTERSECTION

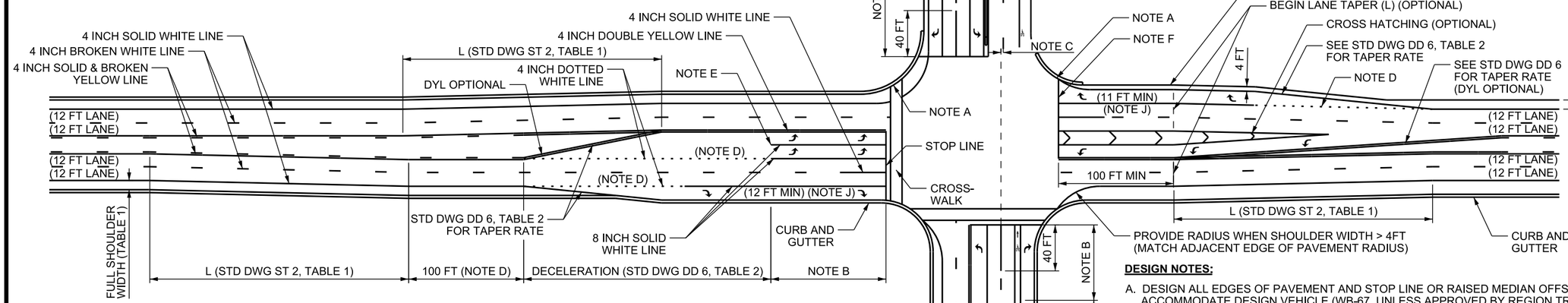

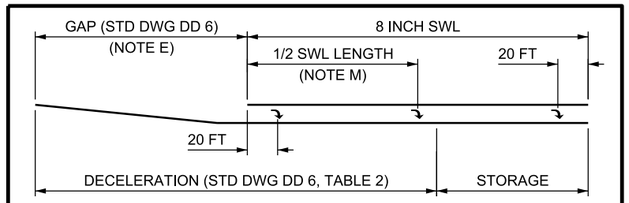

TURN LANE DEFINITIONS (RIGHT SHOWN)

(DECELERATION + STORAGE = GAP + 8 INCH SOLID WHITE LINE) (NOTE G)
(SEE NOTE E FOR DUAL AND TRIPLE TURNS)

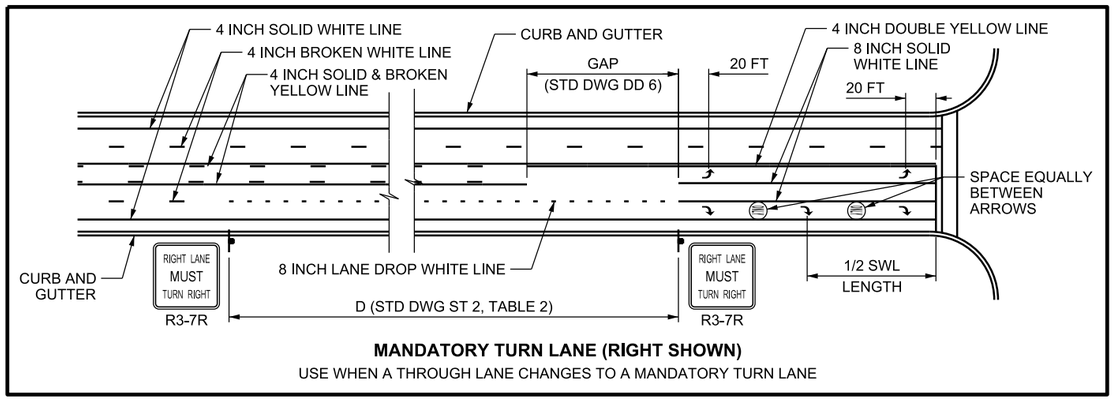

MANDATORY TURN LANE (RIGHT SHOWN)

USE WHEN A THROUGH LANE CHANGES TO A MANDATORY TURN LANE

TABLE 1 - SHOULDER WIDTH*			
DESIGN SPEED (MPH) OR	UNDER 40	40 - 55	OVER 55
VOLUME (AADT)**	UNDER 2000	2000 TO 6000	OVER 6000**
FRONTAGE OR ACCESS ROAD	2 FT	4 FT	8 FT
COLLECTOR ROAD	4 FT	8 FT	10 FT
MINOR ARTERIAL	4 FT	8 FT	10 FT
PRINCIPAL ARTERIAL	4 FT	8 FT	12 FT

*USE A 12 FT SHOULDER TO ACCOMMODATE ON-STREET PARKING AND/OR FREQUENT ACCESSES.
**SHOULDER WIDTH MAY BE REDUCED BY 2 FT (OVER 6000 AADT COLUMN ONLY), IF TRUCK VOLUME IS < 15% OF AADT.

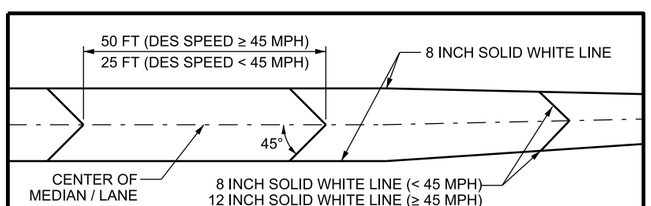

MEDIAN/LANE HATCHING (OPTIONAL)

DESIGN NOTES:

A. DESIGN ALL EDGES OF PAVEMENT AND STOP LINE OR RAISED MEDIAN OFFSETS TO ACCOMMODATE DESIGN VEHICLE (WB-67, UNLESS APPROVED BY REGION TRAFFIC ENGINEER). DESIGN STRIPING TO ACCOMMODATE STANDARD (P) DESIGN VEHICLES.

B. DETERMINE STORAGE LENGTH (PEAK HOUR) BY ENGINEERING ANALYSIS; MINIMUM 100 FT LENGTH. RIGHT AND LEFT TURN STORAGE LENGTHS MAY BE GOVERNED BY ADJACENT THROUGH-LANE STORAGE LENGTHS.

C. MAXIMUM THROUGH AND LEFT-TURN LANE OFFSET ACROSS AN INTERSECTION (MEASURED FROM STRIPE BETWEEN LANES) IS 1 FT UNLESS APPROVED BY THE REGION TRAFFIC ENGINEER (2 FT MAXIMUM). PROVIDE PROPER INTERSECTION SIGHT DISTANCE FOR OPPOSING LEFT TURN LANES.

D. PROVIDE A 4 INCH DOTTED WHITE LINE ACROSS THE OPENING TO HELP DELINEATE THE LANES IF THE TURN LANE OPENING IS ON A CURVE OR THE 100 FT TANGENT PRIOR IS OMITTED (AS APPROVED BY THE REGION TRAFFIC ENGINEER).

E. USE THE GAP LENGTH IN TABLE 2 FOR SINGLE TURN LANES. USE THE DECELERATION LENGTH IN PLACE OF THE GAP LENGTH FOR DUAL AND TRIPLE TURN LANES.

F. SEE THE UTAH MANUAL ON UNIFORM TRAFFIC CONTROL DEVICES FOR STOP LINE PLACEMENT. STOP LINES MAY BE ANGLED OR STAGGERED (WITH APPROVAL OF THE REGION TRAFFIC ENGINEER) IN RELATION TO TRAVEL DIRECTION.

G. THE FOLLOWING MITIGATIONS (IN ORDER OF PRECEDENCE) MAY BE USED UPON APPROVAL OF THE REGION TRAFFIC ENGINEER IF THE MINIMUM TURN LANE LENGTHS CAN'T BE ACHIEVED:
1. REDUCE THE 8 INCH SWL TO THE MINIMUM CALCULATED STORAGE (100 FT MIN), MAINTAINING THE GAP LENGTH. DECELERATION WILL OCCUR IN THROUGH LANES
2. EXTEND THE SHOULDER STRIPE THROUGH THE AREA OF WIDER SHOULDER.

H. DISTANCE IS THE GREATER OF THE PRECEDING CALCULATED THROUGH OR DUAL TURN MOVEMENT STORAGE (THE STORAGE OF THE THROUGH LANES OR TURN LANES FLOWING INTO THESE LANES) (150 FT MIN).

I. PROVIDE A TWO-WAY LEFT TURN LANE CONNECTING ADJACENT ACCESSES WHEN OPPOSING TAPERS OVERLAP OR AS DIRECTED BY THE REGION TRAFFIC ENGINEER.

J. RIGHT TURN LANE WIDTHS MAY BE REDUCED (10 FT MIN) UPON APPROVAL OF THE REGION TRAFFIC ENGINEER.

K. PROVIDE A MINIMUM 100 FT TANGENT APPROACH SECTION PRIOR TO STOP LINES. USE THE SAME ENTRANCE AND EXIT BEARINGS FOR OPPOSING INTERSECTION DIRECTIONS.

L. USE THE AASHTO A POLICY ON GEOMETRIC DESIGN OF HIGHWAYS AND STREETS FOR DESIGN OF ROADWAY ELEMENTS NOT SHOWN ON THIS STANDARD DRAWING.

M. PLACE A THIRD ARROW AT ONE HALF THE DISTANCE OF THE 8 INCH SOLID WHITE LINE (SWL) IF THE 8 INCH SWL IS GREATER THAN 250 FT OR AT THE DIRECTION OF THE REGION TRAFFIC ENGINEER. PLACE ONLY THE TWO TURN ARROWS OTHERWISE. RIGHT TURN ARROWS ARE OPTIONAL IN NON-MANDATORY RIGHT TURN LANES.

REVISIONS

NO.	DATE	APPR.	REMARKS

UTAH DEPARTMENT OF TRANSPORTATION
STANDARD DRAWINGS FOR ROAD AND BRIDGE CONSTRUCTION
SALT LAKE CITY, UTAH

RECOMMENDED FOR APPROVAL — JAN.01, 2017 DATE
CHAIRMAN STANDARDS COMMITTEE APPROVED — JAN.01, 2017 DATE
DEPUTY DIRECTOR

STANDARD DRAWING TITLE
INTERSECTION PAVEMENT MARKINGS

STD. DWG. NO.
ST 6

DGN File: L:\Standard Drawings\Imperial\2017 Approved\1-All Drawings\ST06.dgn
28-NOV-2016

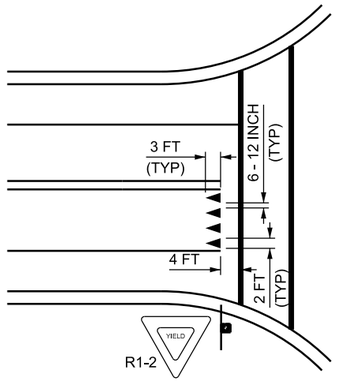

TYPICAL YIELD LINE

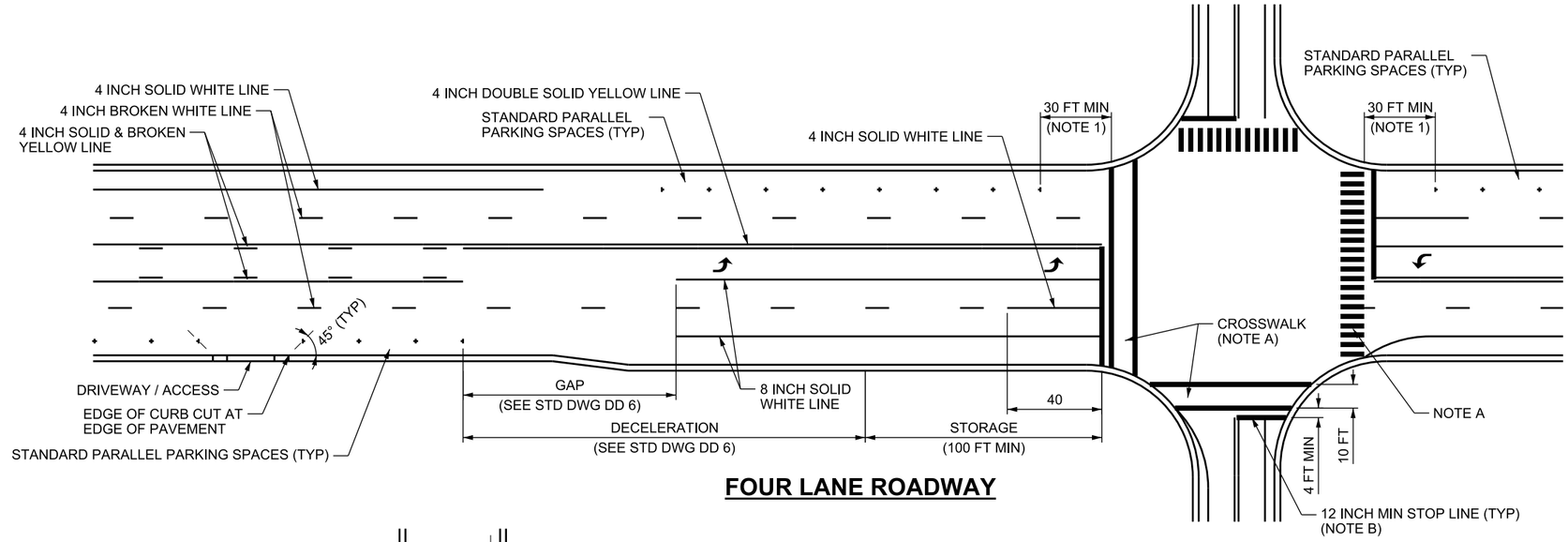

FOUR LANE ROADWAY

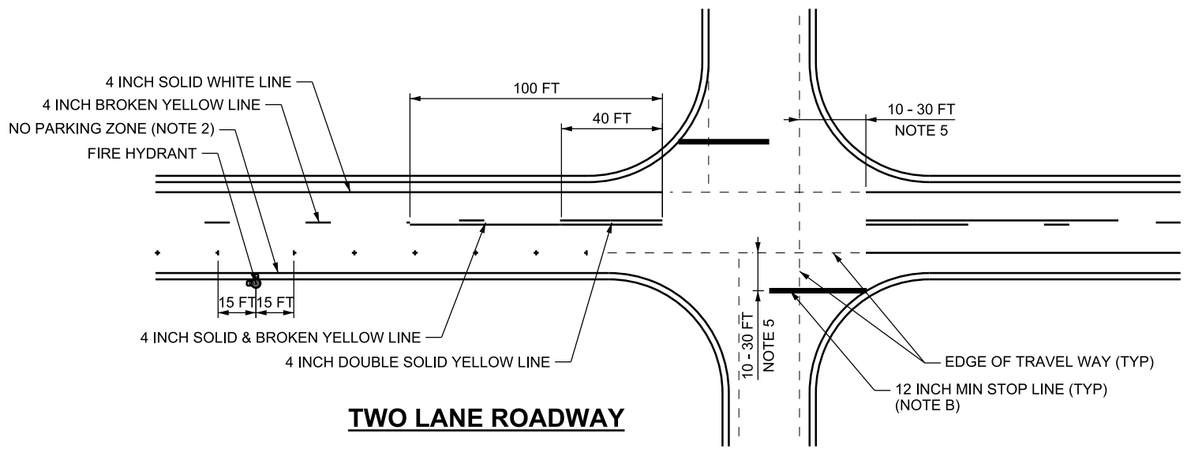

TWO LANE ROADWAY

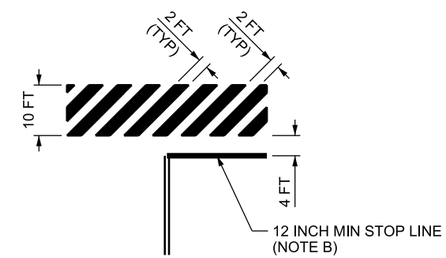

SPECIAL EMPHASIS CROSSWALK

SOLID WHITE DIAGONAL LINES AT 45°
TO DIRECTION OF TRAVEL (NOTE A)

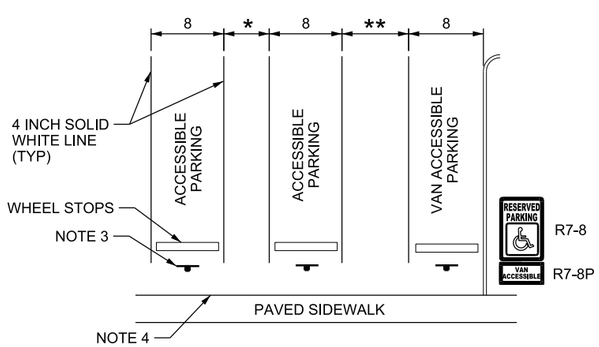

PARKING LOT STRIPING FOR RESERVED ACCESSIBLE PARKING

* 5 FT MIN FOR ACCESSIBLE PARKING
** 8 FT MIN FOR VAN ACCESSIBLE PARKING.
PROVIDE ONE VAN ACCESSIBLE STALL FOR
EVERY EIGHT ACCESSIBLE STALLS.

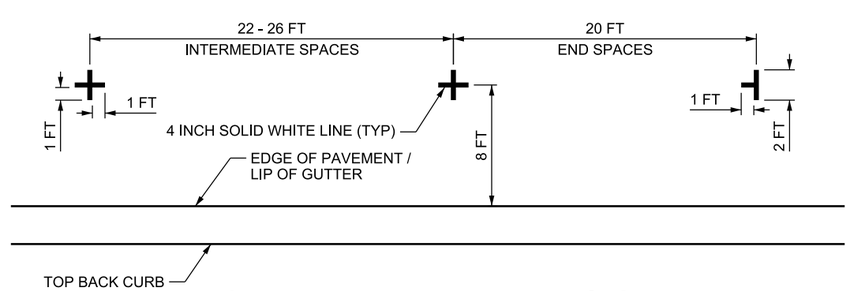

STANDARD PARALLEL PARKING

DESIGN-ONLY NOTES:

A. THE REGION TRAFFIC ENGINEER DETERMINES THE LOCATION AND TYPE OF CROSSWALKS AT AN INTERSECTION.

B. USE A 24 INCH STOP LINE WHERE:
- A SCHOOL CROSSWALK IS PLACED
- AT SIGNALIZED INTERSECTION WHERE NO CROSSWALK IS PRESENT
- AT THE DISCRETION OF THE REGION TRAFFIC ENGINEER

NOTES:

1. ESTABLISH A "NO PARKING" ZONE 30 FT PRIOR TO FLASHING SIGNAL, STOP SIGN, YIELD SIGN, OR SIGNAL.
2. RED CURB MARKING IS OPTIONAL FOR "NO PARKING" ZONE.
3. PROVIDE RESERVED PARKING SIGNING (R7-8) FOR ACCESSIBLE PARKING SPACES. INCLUDE VAN ACCESSIBLE PLAQUE (R7-8P) FOR VAN PARKING SPACES.
4. BLEND ACCESS AISLE WITH PAVED SIDEWALK OR PEDESTRIAN RAMP FOR SMOOTH ELEVATION TRANSITION.
5. PLACE STOP LINE 10-30 FT AWAY FROM THE EDGE OF TRAVEL WAY OF THE CROSS TRAFFIC TO ACCOMMODATE TURNING VEHICLES AND PROVIDE PROPER INTERSECTION SIGHT DISTANCE.

NO.	DATE	APPR.	REMARKS

REVISIONS

UTAH DEPARTMENT OF TRANSPORTATION
STANDARD DRAWINGS FOR ROAD AND BRIDGE CONSTRUCTION
SALT LAKE CITY, UTAH

RECOMMENDED FOR APPROVAL — JAN.01.2017 DATE
CHAIRMAN STANDARDS COMMITTEE APPROVED — JAN.01.2017 DATE
DEPUTY DIRECTOR

STANDARD DRAWING TITLE
CROSSWALKS, PARKING, AND INTERSECTION APPROACHES

STD. DWG. NO.
ST 7

DGN File:L:\Standard Drawings\Imperial\2017 Approved\1-All Drawings\ST07.dgn
28-NOV-2016

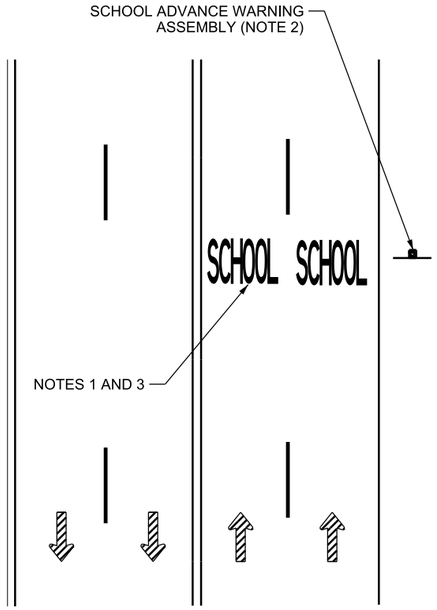

STANDARD

ONE MESSAGE PER LANE
ANY NUMBER OF LANES

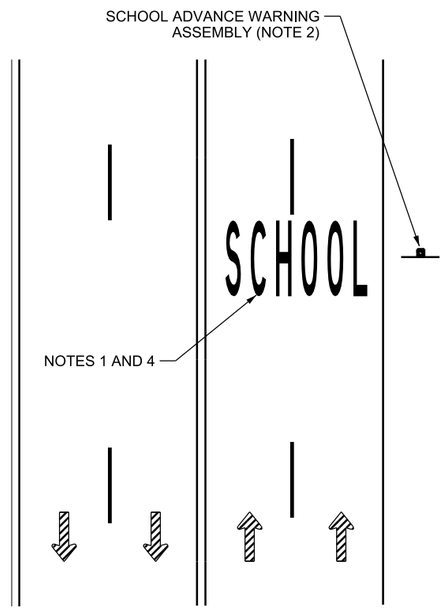

OPTION

ONE MESSAGE PER TWO LANES
EVEN NUMBER OF LANES ONLY

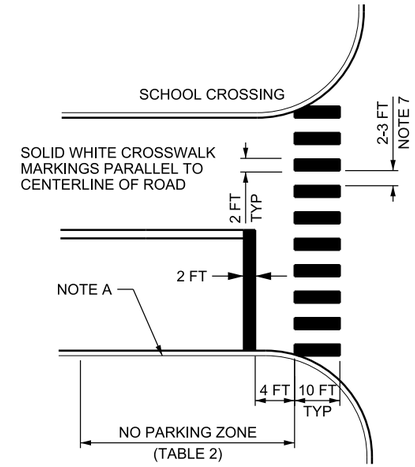

STOP OR SIGNAL CONTROL

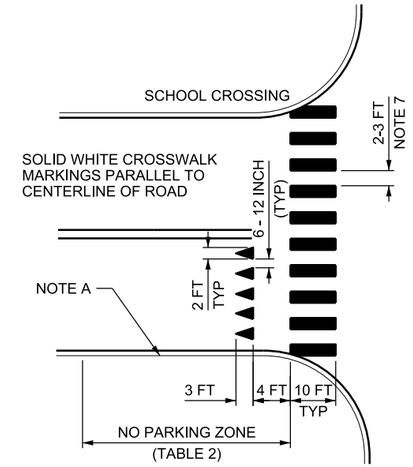

YIELD CONTROL

TABLE 2	
NO PARKING ZONE	
SPEED (MPH) (NOTE B)	LENGTH (FT)
25	60
30	85
35	115
40	150
45	190
50	230

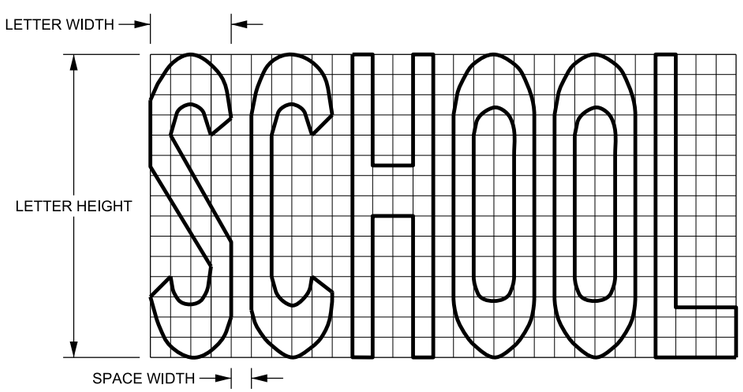

TABLE 1			
RECOMMENDED LETTER SIZES			
ONE-LANE MESSAGE			
LANE WIDTH (FT)	LETTER WIDTH (INCHES)	SPACE WIDTH (INCHES)	MINIMUM LETTER HEIGHT (FT)
12	18	5	6
11.5	17.5	4.5	6
11	16.5	4.25	6
10.5	15.75	4	6
10	15	3.75	6
TWO-LANE MESSAGE			
ALL	32	8	10

DESIGN NOTES:

A. ESTABLISH A "NO PARKING" ZONE PRIOR TO SCHOOL CROSSING, SEE TABLE 2.

B. USE THE GREATER OF (IN ORDER OF PRECEDENCE):
- THE 85TH PERCENTILE SPEED
- OPERATING SPEED DETERMINED BY DESIGN TEAM
- POSTED SPEED

NOTES:

1. PLACE ALL SCHOOL MESSAGES, PAVEMENT MARKINGS, AND SIGNING IN CONFORMANCE WITH THE UTAH TRAFFIC CONTROLS FOR SCHOOL ZONES (SECTION 7 OF THE UTAH MANUAL ON UNIFORM TRAFFIC CONTROL DEVICES).

2. PLACE SCHOOL MESSAGE ADJACENT TO SCHOOL ADVANCE WARNING ASSEMBLY.

3. SINGLE LANE MESSAGES (STANDARD):
   - MAXIMUM MESSAGE WIDTH NOT TO EXCEED LANE WIDTH LESS 10 INCHES (FOR EXAMPLE, 12 FT TRAFFIC LANE WIDTH LESS 10 INCHES EQUALS 11 FT 2 INCHES MAXIMUM MESSAGE WIDTH).
   - MESSAGE TO BE COMPLETELY CONTAINED WITHIN TRAFFIC LANE, AND NOT ENCROACH UPON LANE STRIPING OR OTHER PAVEMENT MARKINGS.

4. TWO LANE MESSAGES (OPTIONAL):
   - USE TWO-LANE MESSAGE ONLY WHEN THERE ARE AN EVEN NUMBER OF LANES.
   - USE TWO-LANE MESSAGE UPON APPROVAL OF THE REGION TRAFFIC ENGINEER.
   - ONE-HALF OF MESSAGE TO BE CONTAINED IN EACH TRAFFIC LANE. PAVEMENT MESSAGE TO BE WITHIN GAP OF 4 INCH BROKEN WHITE LINE BETWEEN LANES.

5. RED CURB MARKING IS OPTIONAL FOR "NO PARKING" ZONE.

6. NON-STATE ROUTES MAY USE 9 FT WIDE CROSSWALK MARKINGS.

7. PLACE CROSSWALK MARKINGS 2 FT TO 3 FT APART TO AVOID WHEEL PATHS.

NO.	DATE	APPR.	REMARKS
REVISIONS			

UTAH DEPARTMENT OF TRANSPORTATION
STANDARD DRAWINGS FOR ROAD AND BRIDGE CONSTRUCTION
SALT LAKE CITY, UTAH

RECOMMENDED FOR APPROVAL — JAN.01.2017 DATE
CHAIRMAN STANDARDS COMMITTEE APPROVED — JAN.01.2017 DATE
DEPUTY DIRECTOR

STANDARD DRAWING TITLE
SCHOOL CROSSING AND SCHOOL MESSAGE

STD. DWG. NO.
ST 8

DGN File:L:\Standard Drawings\Imperial\2017 Approved\1-All Drawings\ST08.dgn
28-NOV-2016

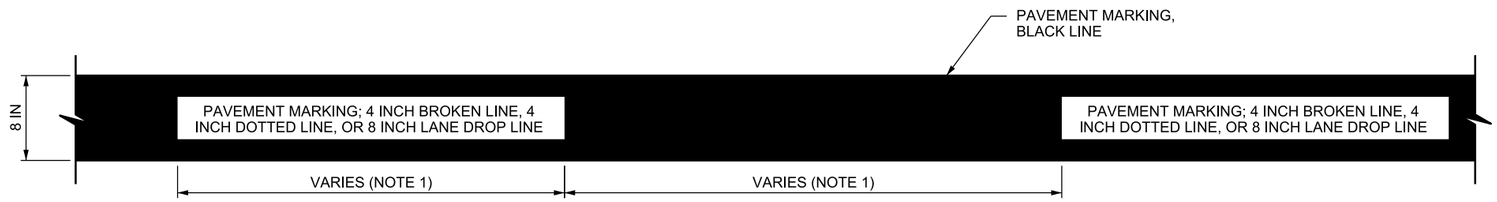

CONTINUOUS CONTRAST PAVEMENT MARKING

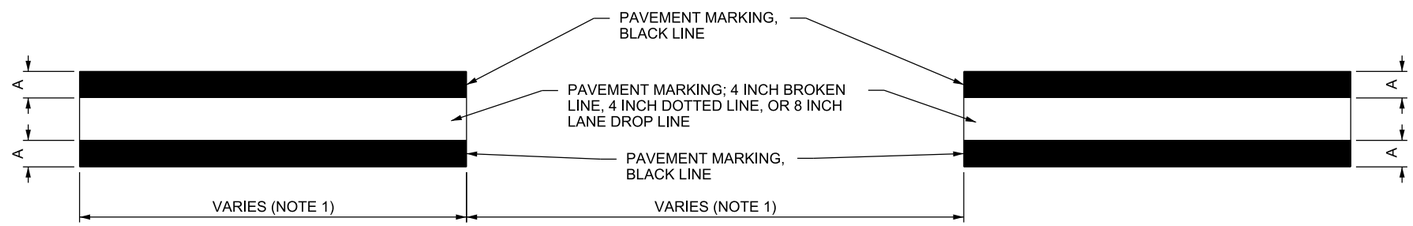

BACKGROUND CONTRAST PAVEMENT MARKING OPTION 1

DIMENSION "A"	
PAINT	TAPE
2-3 INCHES	1.5 INCH MIN

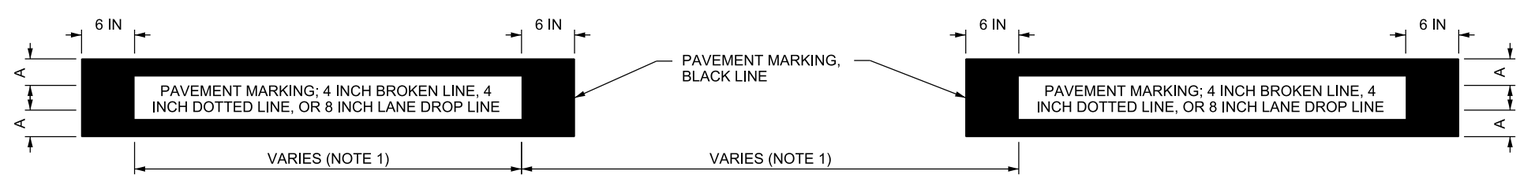

BACKGROUND CONTRAST PAVEMENT MARKING OPTION 2

NOTES:

1. SEE STD DWG ST 1 FOR LINE DIMENSIONS.
2. USE BACKGROUND CONTRAST OPTION 1 WHEN BLACK AND WHITE LINES ARE APPLIED SIMULTANEOUSLY.
3. USE OF CONTRAST PAVEMENT MARKINGS IS AT THE DISCRETION OF THE REGION TRAFFIC ENGINEER.
4. DETAILS SHOWN ARE FOR PORTLAND CEMENT CONCRETE PAVEMENT (PCCP).

REVISIONS

NO.	DATE	APPR.	REMARKS

UTAH DEPARTMENT OF TRANSPORTATION
STANDARD DRAWINGS FOR ROAD AND BRIDGE CONSTRUCTION
SALT LAKE CITY, UTAH

RECOMMENDED FOR APPROVAL — JAN.01.2017 DATE
CHAIRMAN STANDARDS COMMITTEE APPROVED — JAN.01.2017 DATE
DEPUTY DIRECTOR

STANDARD DRAWING TITLE: CONTRAST PAVEMENT MARKINGS FOR CONCRETE PAVEMENT

STD. DWG. NO. ST 9

DGN File:L:\Standard Drawings\Imperial\2017 Approved\1-All Drawings\ST09.dgn
28-NOV-2016

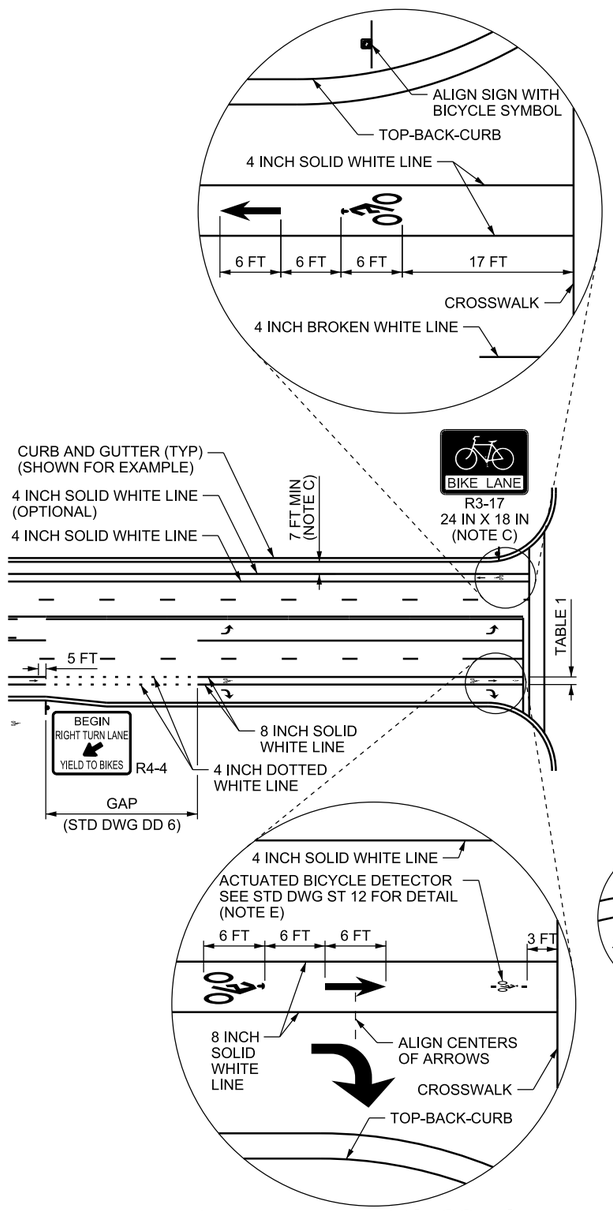

PAVEMENT MARKINGS WITH ACTUATED BICYCLE DETECTOR

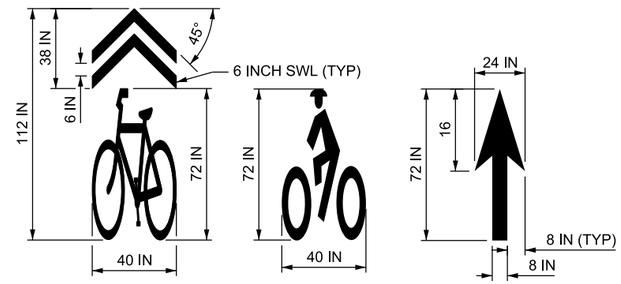

BICYCLE PAVEMENT MESSAGE DETAILS

NOTE D

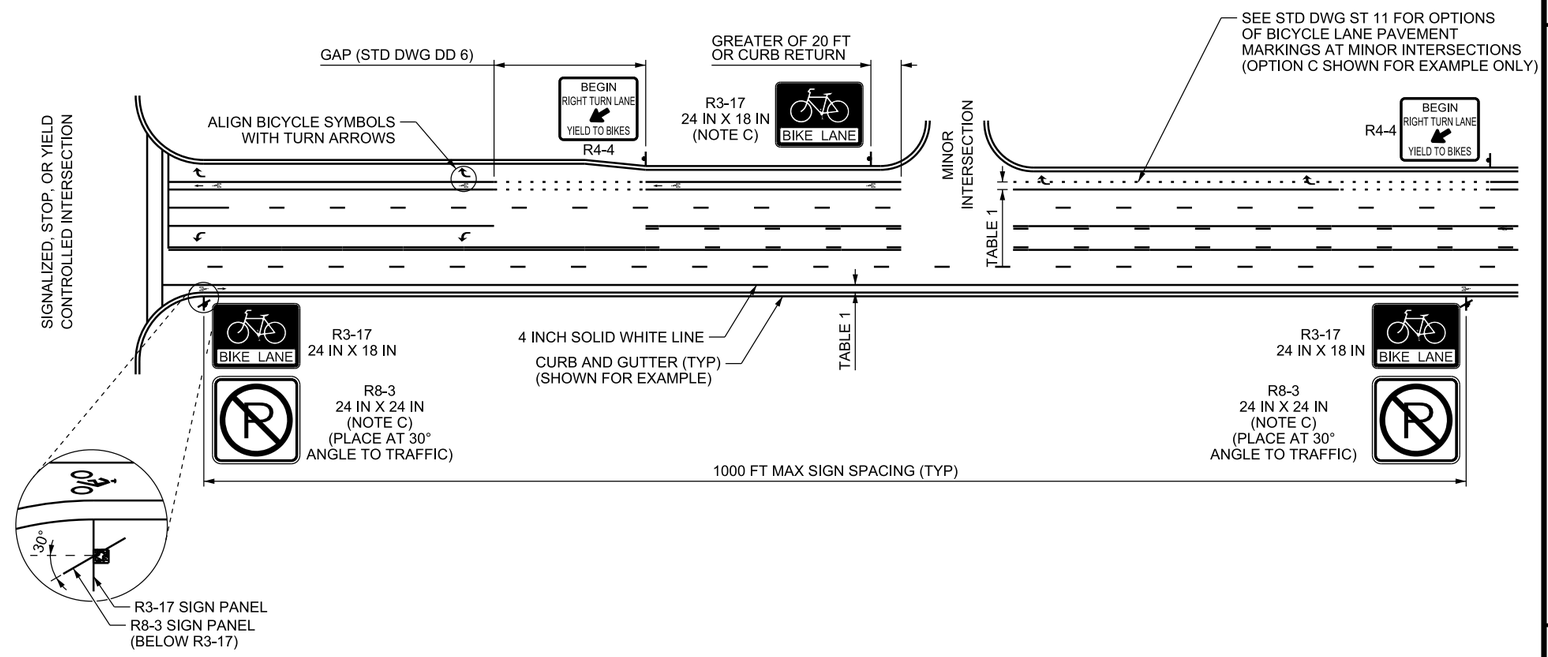

TABLE 1 - BICYCLE LANE WIDTH		
DESIGN SPEED OR	< 45 MPH	≥ 50 MPH
VOLUME	< 6,000 ADT	≥ 6,000 ADT
ON STREET PARKING	5-7 FT	5-7 FT
NO ON STREET PARKING	4-5 FT	
VERTICAL SURFACE*	5-7 FT	
NO VERTICAL SURFACE*	4-5 FT	

*VERTICAL SURFACE IS ANY CONTINUOUS OR REPEATED VERTICAL OR NEAR VERTICAL ELEMENT GREATER THAN 18 INCHES IN HEIGHT, INCLUDING BUT NOT LIMITED TO: BARRIER, GUARDRAIL, WALLS, AND PARKED VEHICLES.

DESIGN NOTES:

A. USE THE UTAH MANUAL ON UNIFORM TRAFFIC CONTROL DEVICES (MUTCD), THE AASHTO A POLICY ON GEOMETRIC DESIGN OF HIGHWAYS AND STREETS, AND THE AASHTO GUIDE FOR THE DEVELOPMENT OF BICYCLE FACILITIES FOR DESIGN OF ELEMENTS NOT SHOWN ON THIS STANDARD DRAWING.

B. SEE STD DWG ST 1 FOR LINE DIMENSIONS.

C. USE NO PARKING SIGN, R8-3 WHEN SHOULDER WIDTH IS LESS THAN 7 FT.

D. REFER TO THE STANDARD HIGHWAY SIGNS MANUAL FOR ADDITIONAL PAVEMENT MESSAGE DIMENSIONING AND DETAILS.

E. INSTALL BICYCLE DETECTOR PAVEMENT MARKINGS ONLY ON ACTUATED APPROACHES WHERE DETECTION IS THE ONLY MECHANISM USED TO CALL THE SIGNAL PHASE (WHERE IT IS NECESSARY FOR THE CYCLISTS TO STOP AND WAIT IN CERTAIN LOCATIONS TO ACTIVATE THE TRAFFIC SIGNAL). CONTACT THE REGION SIGNAL ENGINEER FOR SPECIFICS ON WHICH DETECTORS ARE USED TO CALL THE PHASES.

REVISIONS

NO.	DATE	APPR.	REMARKS

UTAH DEPARTMENT OF TRANSPORTATION
STANDARD DRAWINGS FOR ROAD AND BRIDGE CONSTRUCTION
SALT LAKE CITY, UTAH

RECOMMENDED FOR APPROVAL — JAN.01, 2017 DATE
CHAIRMAN STANDARDS COMMITTEE APPROVED — JAN.01, 2017 DATE
DEPUTY DIRECTOR

STANDARD DRAWING TITLE
BICYCLE LANE PAVEMENT MARKINGS (SHEET 1 OF 2)

STD. DWG. NO.
ST 10

28-NOV-2016 L:\Standard_Drawings\Imperial\2017 Approved\1-All Drawings\ST10.dgn

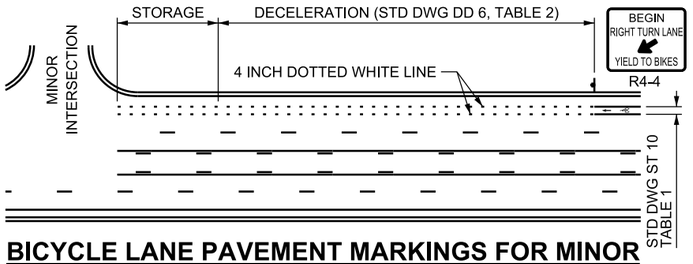

BICYCLE LANE PAVEMENT MARKINGS FOR MINOR INTERSECTIONS AND BUS STOPS - OPTION A

MINIMUM RIGHT TURN VOLUME OF 10 VPH

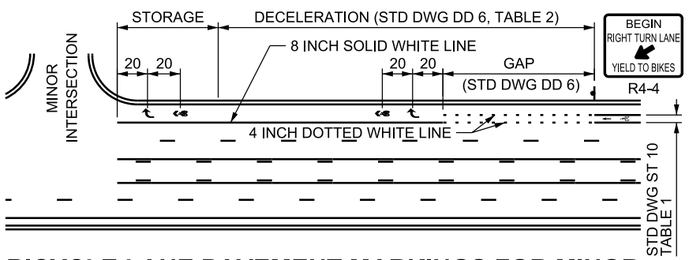

BICYCLE LANE PAVEMENT MARKINGS FOR MINOR INTERSECTIONS AND BUS STOPS - OPTION B

MINIMUM RIGHT TURN VOLUME OF 10 VPH

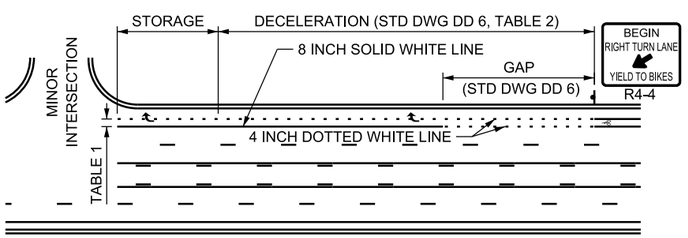

BICYCLE LANE PAVEMENT MARKINGS FOR MINOR INTERSECTIONS - OPTION C

MINIMUM RIGHT TURN VOLUME OF 10 VPH

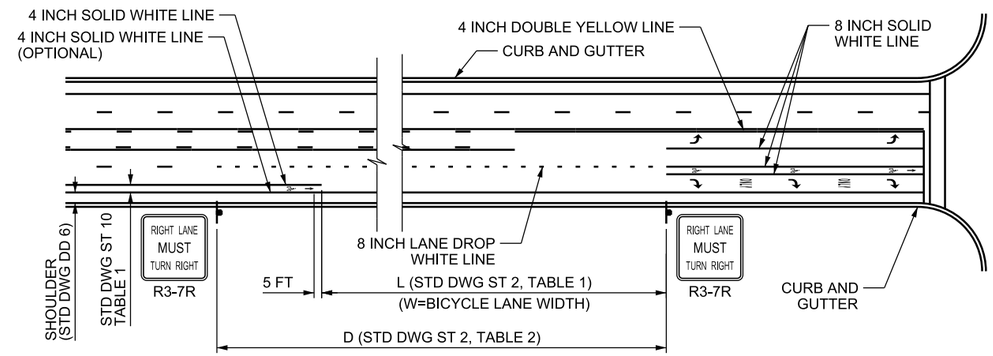

BICYCLE LANE WITH A MANDATORY RIGHT TURN LANE

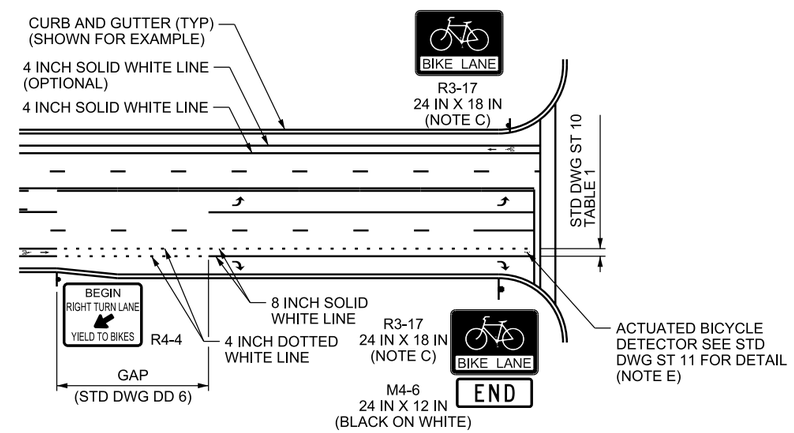

BICYCLE MARKINGS WHEN BICYCLE LANE ENDS AT INTERSECTION

DESIGN NOTES:

A. USE THE UTAH MANUAL ON UNIFORM TRAFFIC CONTROL DEVICES (MUTCD), THE AASHTO A POLICY ON GEOMETRIC DESIGN OF HIGHWAYS AND STREETS, AND THE AASHTO GUIDE FOR THE DEVELOPMENT OF BICYCLE FACILITIES FOR DESIGN OF ELEMENTS NOT SHOWN ON THIS STANDARD DRAWING.

B. SEE STD DWG ST 1 FOR LINE DIMENSIONS.

C. USE NO PARKING SIGN, R8-3 WHEN SHOULDER WIDTH IS LESS THAN 7 FT.

D. USE CORRIDOR-SIMILAR DESIGN WHEN SELECTING PAVEMENT MARKINGS FOR RIGHT\ TURNS AT MINOR INTERSECTIONS (OPTIONS A, B, OR C).

E. INSTALL BICYCLE DETECTOR PAVEMENT MARKINGS ONLY ON ACTUATED APPROACHES WHERE DETECTION IS THE ONLY MECHANISM USED TO CALL THE SIGNAL PHASE (WHERE IT IS NECESSARY FOR THE CYCLISTS TO STOP AND WAIT IN CERTAIN LOCATIONS TO ACTIVATE THE TRAFFIC SIGNAL). CONTACT THE REGION SIGNAL ENGINEER FOR SPECIFICS ON WHICH DETECTORS ARE USED TO CALL THE PHASES.

REVISIONS

NO.	DATE	APPR.	REMARKS

UTAH DEPARTMENT OF TRANSPORTATION
STANDARD DRAWINGS FOR ROAD AND BRIDGE CONSTRUCTION
SALT LAKE CITY, UTAH

RECOMMENDED FOR APPROVAL — JAN.01, 2017 DATE
CHAIRMAN STANDARDS COMMITTEE APPROVED — JAN.01, 2017 DATE
DEPUTY DIRECTOR

STANDARD DRAWING TITLE
BICYCLE LANE PAVEMENT MARKINGS (SHEET 2 OF 2)

STD. DWG. NO.
ST 11

28-NOV-2016 DGN File:L:\Standard_Drawings\Imperial\2017 Approved\1-All Drawings\ST11.dgn

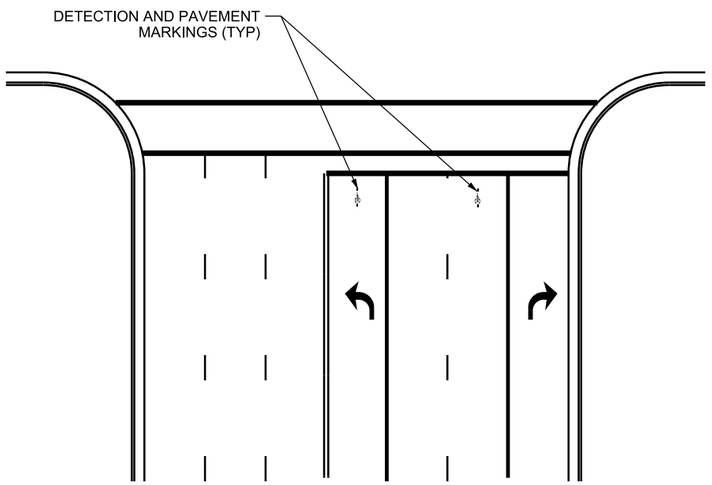

LEFT TURN AND RIGHT TURN LANES

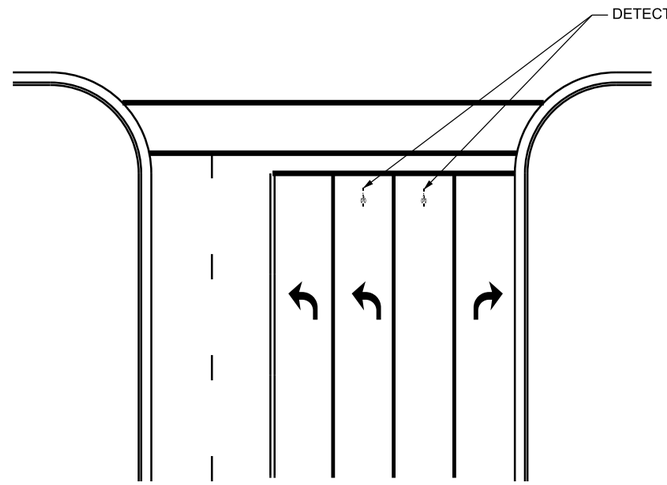

DUAL LEFT TURN AND RIGHT TURN LANES

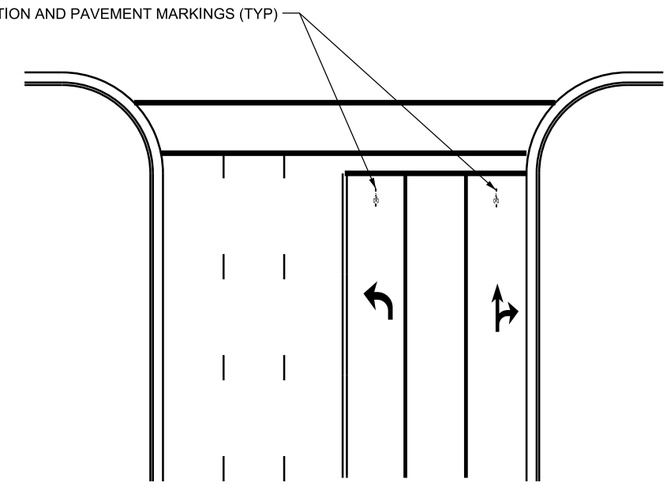

LEFT TURN AND SHARED THROUGH/RIGHT TURN LANES

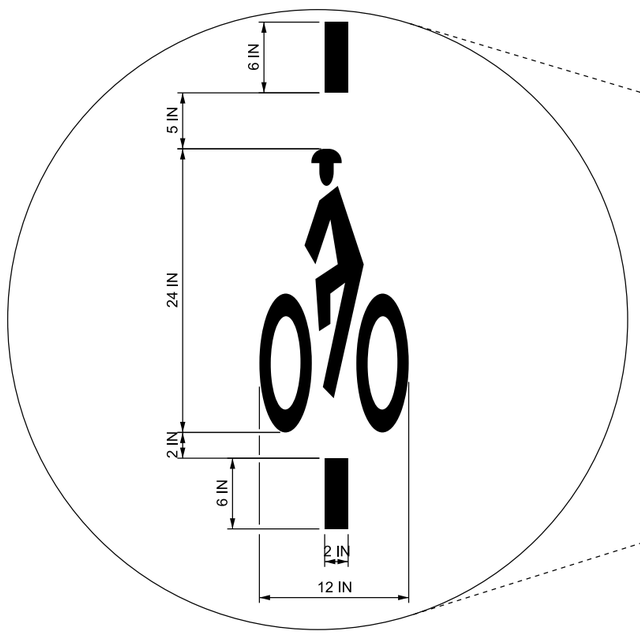

BICYCLE DETECTOR PAVEMENT MESSAGE

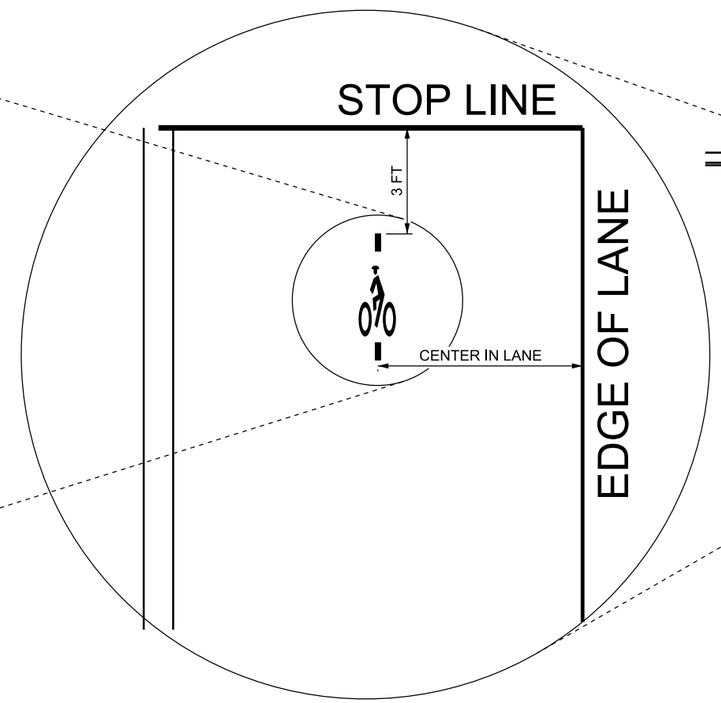

LOCATION OF BICYCLE DETECTOR IN LANE

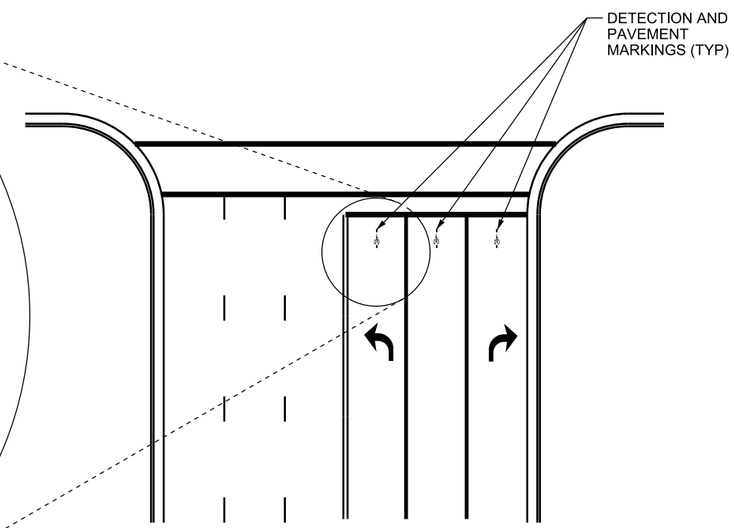

LEFT TURN AND NO TURN ON RED RIGHT TURN LANES

DESIGN NOTES:

A. INSTALL BICYCLE DETECTOR PAVEMENT MARKINGS ONLY ON ACTUATED APPROACHES WHERE DETECTION IS THE ONLY MECHANISM USED TO CALL THE SIGNAL PHASE (WHERE IT IS NECESSARY FOR THE CYCLISTS TO STOP AND WAIT IN CERTAIN LOCATIONS TO ACTIVATE THE TRAFFIC SIGNAL). CONTACT THE REGION SIGNAL ENGINEER FOR SPECIFICS ON WHICH DETECTORS ARE USED TO CALL THE PHASES.

REVISIONS

NO.	DATE	APPR.	REMARKS

UTAH DEPARTMENT OF TRANSPORTATION
STANDARD DRAWINGS FOR ROAD AND BRIDGE CONSTRUCTION
SALT LAKE CITY, UTAH

RECOMMENDED FOR APPROVAL — JAN. 01, 2017 DATE
CHAIRMAN STANDARDS COMMITTEE APPROVED — JAN. 01, 2017 DATE
DEPUTY DIRECTOR

LOCATION OF BICYCLE DETECTOR PAVEMENT MESSAGES AT INTERSECTION

STANDARD DRAWING TITLE

STD. DWG. NO.
ST 12

28-NOV-2016 DGN File: L:\Standard Drawings\Imperial\2017 Approved\1-All Drawings\ST12.dgn

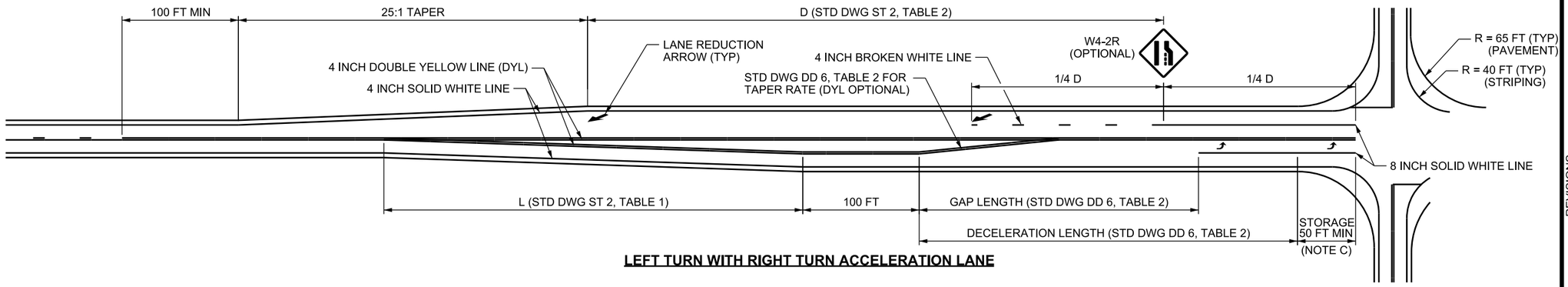

LEFT TURN WITH RIGHT TURN ACCELERATION LANE

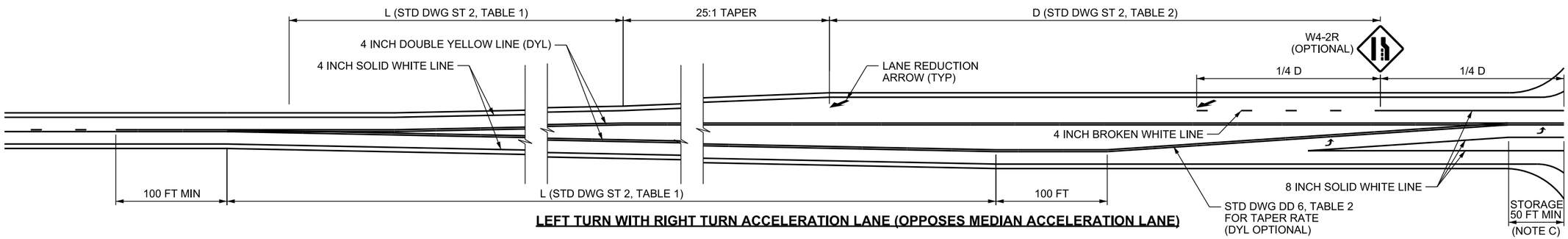

LEFT TURN WITH RIGHT TURN ACCELERATION LANE (OPPOSES MEDIAN ACCELERATION LANE)

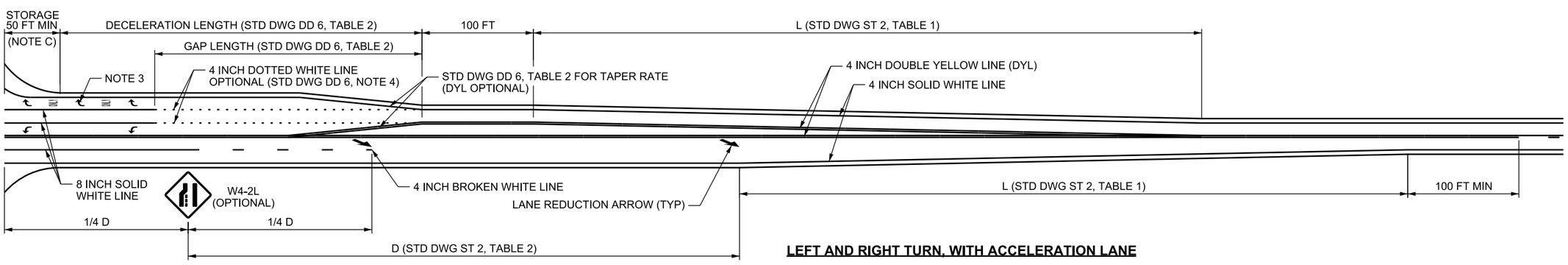

LEFT AND RIGHT TURN, WITH ACCELERATION LANE

TABLE 1				
MINIMUM LEVELS FOR INSTALLATION OF TURN AND ACCELERATION LANES ON TWO LANE ROADS				
SPEED	LEFT TURN LANE	RIGHT TURN LANE	LEFT TURN ACCELERATION LANE	RIGHT TURN ACCELERATION LANE
40 MPH AND LESS	25 VPH	50 VPH	*	*
45 TO 55 MPH	10 VPH	25 VPH	*	50 VPH
60 MPH AND GREATER	5 VPH	10 VPH	**	25 VPH

* OPTIONAL FOR 50 MPH AND LESS. FOR 55 MPH, AS REQUIRED BY THE REGION TRAFFIC ENGINEER.
** AS REQUIRED BY THE REGION TRAFFIC ENGINEER.
VPH= VEHICLES PER HOUR IN ANY ONE HOUR PERIOD IN PASSENGER CAR EQUIVALENTS.

DESIGN NOTES:

A. USE THE AASHTO A POLICY ON GEOMETRIC DESIGN OF HIGHWAYS AND STREETS AND THE UTAH MANUAL ON UNIFORM TRAFFIC CONTROL DEVICES (MUTCD) FOR DESIGN OF ROADWAY ELEMENTS NOT SHOWN.

B. CONFIGURATIONS SHOWN MAY VARY BASED ON LOCATION OF WIDENING (EQUAL WIDENING TO BOTH SIDES AS OPPOSED TO ONE SIDE OF THE EXISTING ROAD OR ANOTHER, FOR EXAMPLE).

C. INCREASE VEHICLE STORAGE LENGTH AS DETERMINED BY ENGINEERING STUDY OR REGION TRAFFIC ENGINEER.

D. DESIGN ALL EDGES OF PAVEMENT AND STOP LINE / RAISED MEDIAN OFFSETS FOR DESIGN VEHICLE (WB-67, UNLESS APPROVED BY REGION TRAFFIC ENGINEER). DESIGN STRIPING FOR STANDARD (P) DESIGN VEHICLES.

NOTES:

1. MATCH THE EXISTING OUTSIDE SHOULDER WIDTH (4 FT MIN) FOR ACCELERATION AND DECELERATION LANES (INCLUDING TAPERS). USE TABLE 1 ON STD DWG DD 6 FOR ALL OTHER SHOULDER WIDTHS.
2. PROVIDE A TWO-WAY LEFT TURN LANE CONNECTING ADJACENT ACCESS POINTS WHEN THEIR TAPERS OVERLAP, OR AS DIRECTED BY THE REGION TRAFFIC ENGINEER.
3. PLACE RIGHT TURN ARROWS AND "ONLY" MARKINGS WHEN AN OPPOSING RIGHT TURN ACCELERATION OR A MANDATORY LANE DROP IS USED. SEE STD DWG ST 6 FOR PAVEMENT MESSAGE PLACEMENT.

REVISIONS

NO.	DATE	APPR.	REMARKS

UTAH DEPARTMENT OF TRANSPORTATION
STANDARD DRAWINGS FOR ROAD AND BRIDGE CONSTRUCTION
SALT LAKE CITY, UTAH

RECOMMENDED FOR APPROVAL — JAN.01.2017 DATE
CHAIRMAN STANDARDS COMMITTEE APPROVED — JAN.01.2017 DATE
DEPUTY DIRECTOR

STANDARD DRAWING TITLE: TWO-LANE INTERSECTION PAVEMENT MARKINGS (SHEET 1 OF 2)

STD. DWG. NO. ST 13

DGN File:L:\Standard Drawings\Imperial\2017 Approved\1-All Drawings\ST13.dgn
28-NOV-2016

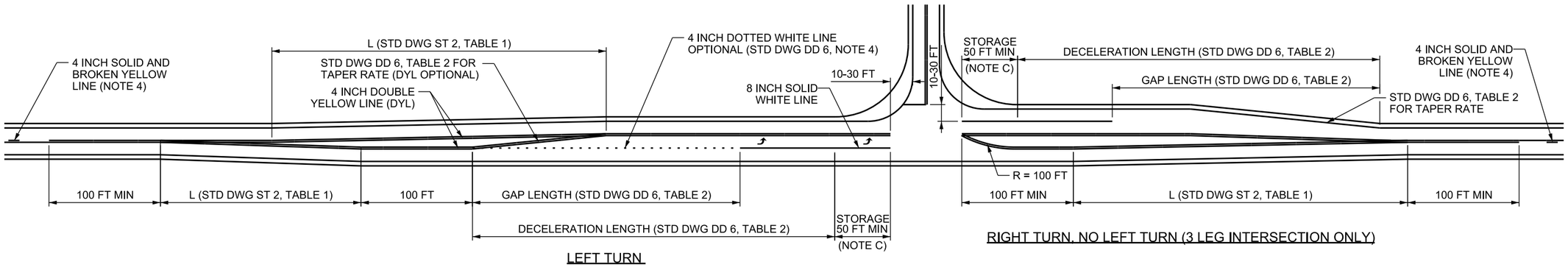

LEFT TURN

RIGHT TURN, NO LEFT TURN (3 LEG INTERSECTION ONLY)

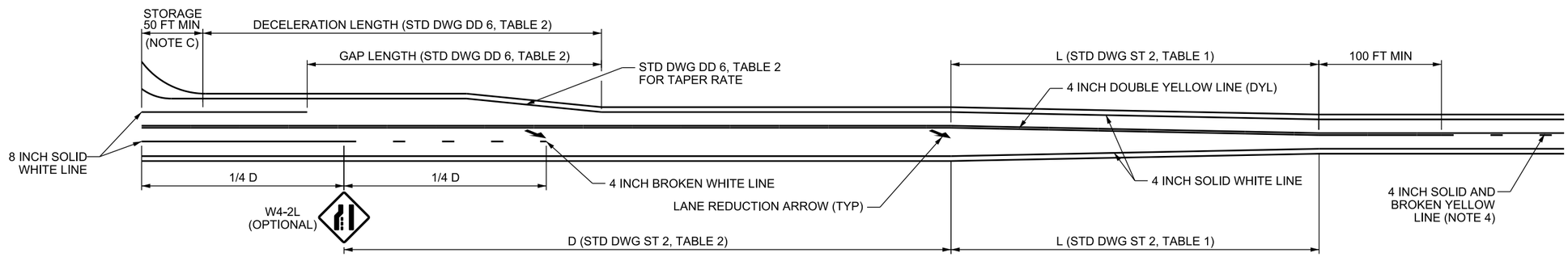

RIGHT TURN, NO LEFT TURN, WITH MEDIAN ACCELERATION LANE

TABLE 1				
MINIMUM LEVELS FOR INSTALLATION OF TURN AND ACCELERATION LANES ON TWO LANE ROADS				
SPEED	LEFT TURN LANE	RIGHT TURN LANE	LEFT TURN ACCELERATION LANE	RIGHT TURN ACCELERATION LANE
40 MPH AND LESS	25 VPH	50 VPH	*	*
45 TO 55 MPH	10 VPH	25 VPH	*	50 VPH
60 MPH AND GREATER	5 VPH	10 VPH	**	25 VPH

* OPTIONAL FOR 50 MPH AND LESS. FOR 55 MPH, AS REQUIRED BY THE REGION TRAFFIC ENGINEER.
** AS REQUIRED BY THE REGION TRAFFIC ENGINEER.
VPH= VEHICLES PER HOUR IN ANY ONE HOUR PERIOD IN PASSENGER CAR EQUIVALENTS.

DESIGN NOTES:

A. USE THE AASHTO A POLICY ON GEOMETRIC DESIGN OF HIGHWAYS AND STREETS AND THE UTAH MANUAL ON UNIFORM TRAFFIC CONTROL DEVICES (MUTCD) FOR DESIGN OF ROADWAY ELEMENTS NOT SHOWN.

B. CONFIGURATIONS SHOWN MAY VARY BASED ON LOCATION OF WIDENING (EQUAL WIDENING TO BOTH SIDES AS OPPOSED TO ONE SIDE OF THE EXISTING ROAD OR ANOTHER, FOR EXAMPLE).

C. INCREASE VEHICLE STORAGE LENGTH AS DETERMINED BY ENGINEERING STUDY OR REGION TRAFFIC ENGINEER.

D. DESIGN ALL EDGES OF PAVEMENT AND STOP LINE / RAISED MEDIAN OFFSETS FOR DESIGN VEHICLE (WB-67, UNLESS APPROVED BY REGION TRAFFIC ENGINEER). DESIGN STRIPING FOR STANDARD (P) DESIGN VEHICLES.

NOTES:

1. MATCH THE EXISTING OUTSIDE SHOULDER WIDTH (4 FT MIN) FOR ACCELERATION AND DECELERATION LANES (INCLUDING TAPERS). USE TABLE 1 ON STD DWG DD 6 FOR ALL OTHER SHOULDER WIDTHS.
2. PROVIDE A TWO-WAY LEFT TURN LANE CONNECTING ADJACENT ACCESS POINTS WHEN THEIR TAPERS OVERLAP, OR AS DIRECTED BY THE REGION TRAFFIC ENGINEER.
3. PLACE RIGHT TURN ARROWS AND "ONLY" MARKINGS WHEN AN OPPOSING RIGHT TURN ACCELERATION OR A MANDATORY LANE DROP IS USED. SEE STD DWG ST 6 FOR PAVEMENT MESSAGE PLACEMENT.
4. PLACE PASSING ZONE STRIPING PER STD DWG ST 1 AND ST 2.

REVISIONS

NO.	DATE	APPR.	REMARKS

UTAH DEPARTMENT OF TRANSPORTATION
STANDARD DRAWINGS FOR ROAD AND BRIDGE CONSTRUCTION
SALT LAKE CITY, UTAH

RECOMMENDED FOR APPROVAL — JAN.01, 2017 DATE
CHAIRMAN STANDARDS COMMITTEE APPROVED — JAN.01, 2017 DATE
DEPUTY DIRECTOR

STANDARD DRAWING TITLE
TWO-LANE INTERSECTION PAVEMENT MARKINGS (SHEET 2 OF 2)

STD. DWG. NO.
ST 14

DGN File: L:\Standard Drawings\Imperial\2017 Approved\1-All Drawings\ST14.dgn
28-NOV-2016

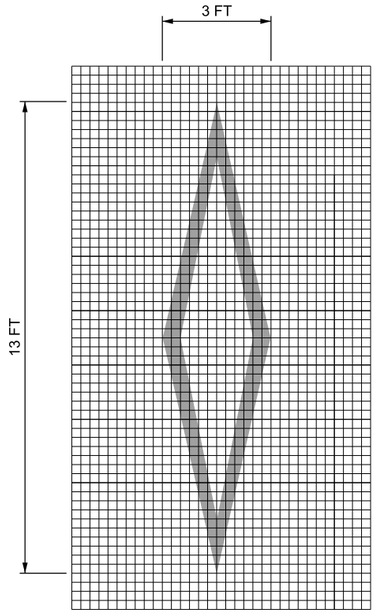

HOV LANE SYMBOL PAVEMENT MARKING DETAIL

NOTES 1 AND 2

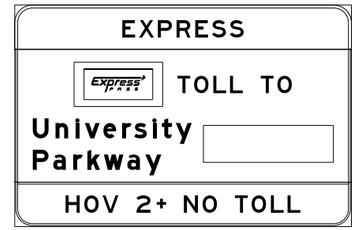

RS3-48B
EXPRESS
ELECTRONIC
TOLL

Ⓐ

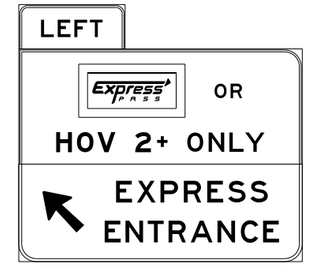

ES8-7
EXPRESS
INTERMEDIATE
DIRECTION

Ⓑ

RS3-44B
EXPRESS
DIRECTION

Ⓒ

RS3-41
LEFT LANE
HOV-TOLL
IS 2+ OR TOLL

Ⓓ

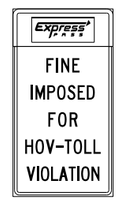

RS3-40b
FINE IMPOSED
FOR HOV-TOLL
VIOLATION

Ⓔ

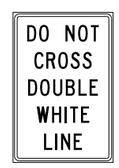

RS3-40d
DO NOT CROSS
DOUBLE
WHITE LINE

Ⓕ

ES8-6
EXPRESS EGRESS
FRACTIONAL MILE
ADVANCE

Ⓖ

RS12-9a
NO VEHICLES OVER
12000 GVW
IN LEFT 2 LANES

Ⓗ

RS12-10a
NO VEHICLES
TOWING TRAILERS
IN LEFT 2 LANES

Ⓘ

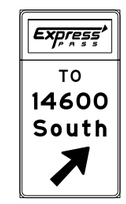

ES8-5
EXPRESS
EGRESS
DIRECTION

Ⓙ

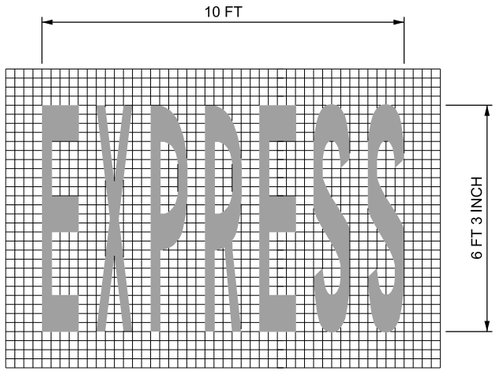

EXPRESS PAVEMENT MARKING DETAIL

NOTES 1 AND 2

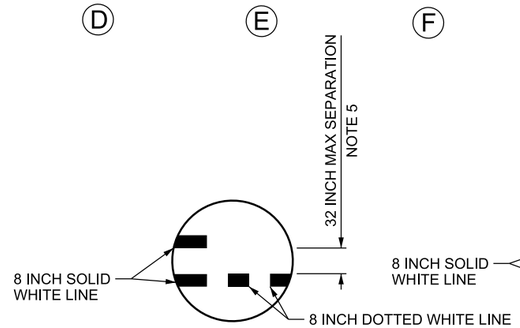

STRIPING DETAIL FOR TRANSITION FROM PROHIBITED MOVEMENT TO ACCESS OPENING

NOTES 4, 5

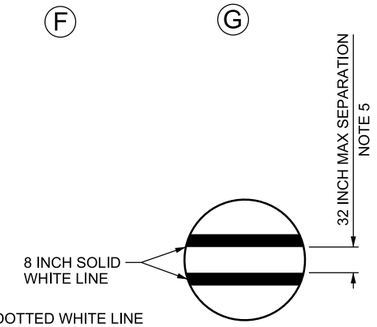

STRIPING DETAIL FOR PROHIBITED MOVEMENTS

NOTE 5

NOTES:

1. PLACE EXPRESS PAVEMENT MARKING AND HOV LANE SYMBOL PAVEMENT MARKING BEFORE EGRESS, ONCE IN THE ACCESS OPENING, AFTER THE ENTRANCE, AND EVERY 1/4 MILE IN THE PREFERENTIAL LANE.
2. PLACE THE HOV LANE SYMBOL PAVEMENT MARKING 100 FT AFTER THE EXPRESS PAVEMENT MARKING (TYPICAL).
3. PLACE BARRIER MOUNTED SIGNS BACK TO BACK WHERE APPLICABLE. PLACE SIGNS PERPENDICULAR TO TRAFFIC UNLESS THE SIGN IS WIDER THAN 4 FT. SKEW SIGNS WIDER THAN 4 FT UP TO 45 DEGREES SO THE SIGN DOES NOT PROJECT MORE THAN 1 FT BEYOND THE OUTER EDGE OF THE BARRIER.
4. PLACE 8 INCH DOTTED WHITE LINE AS THE EXTENSION OF THE 8 INCH SOLID WHITE LINE ADJACENT TO THE GENERAL PURPOSE LANE.
5. USE 32 INCH (INSIDE TO INSIDE) SEPARATION BETWEEN DOUBLE SOLID WHITE LINES. USE OF LESS THAN 32 INCH SEPARATION (8 INCH MINIMUM) IS ALLOWED ONLY UPON APPROVAL OF CENTRAL TRAFFIC AND SAFETY.
6. SEE THE UTAH STANDARD HIGHWAY SIGNS SUPPLEMENT FOR LAYOUT AND SIGN SIZE.
7. STREET NAMES SHOWN ARE FOR EXAMPLE ONLY.

REVISIONS

NO.	DATE	APPR.	REMARKS

UTAH DEPARTMENT OF TRANSPORTATION
STANDARD DRAWINGS FOR ROAD AND BRIDGE CONSTRUCTION
SALT LAKE CITY, UTAH

RECOMMENDED FOR APPROVAL — JAN. 01, 2017 DATE
CHAIRMAN STANDARDS COMMITTEE APPROVED — JAN.01, 2017 DATE
DEPUTY DIRECTOR

STANDARD DRAWING TITLE
PREFERENTIAL LANE SIGNING AND PAVEMENT MARKING DETAILS

STD. DWG. NO.
ST 15

DGN File:L:\Standard Drawings\Imperial\2017 Approved\1-All Drawings\ST15.dgn
28-NOV-2016

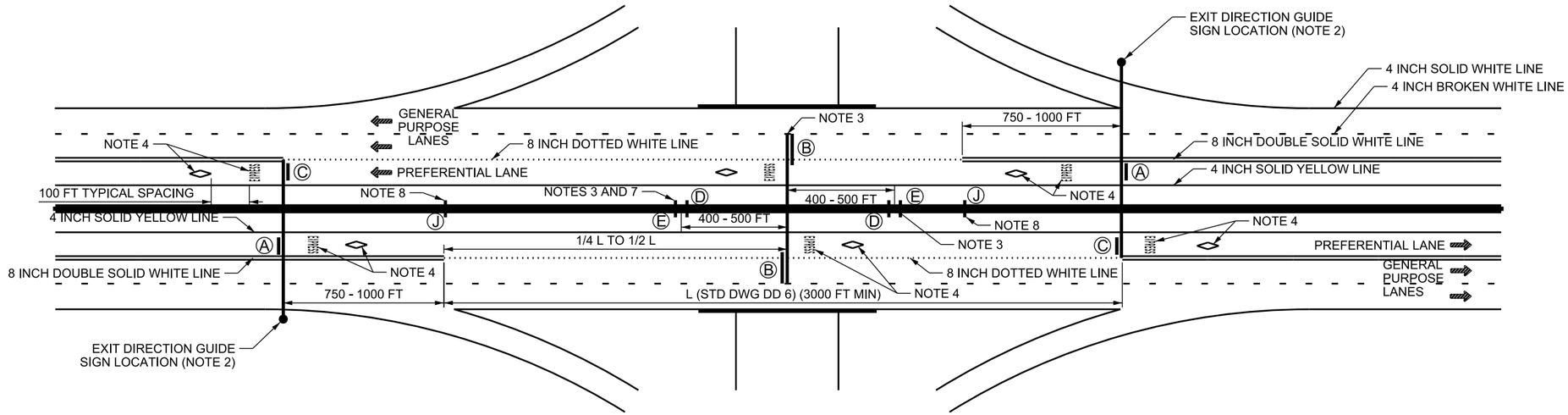

PREFERENTIAL LANE ACCESS OPENING DETAILS

LEGEND

- BARRIER OR POST MOUNTED SIGN
- OVERHEAD MOUNTED SIGN
- Ⓐ SIGN IDENTIFICATION CODE (SEE STD DWG ST 15)
- HOV SYMBOL PAVEMENT MARKING
- EXPRESS — EXPRESS LANE PAVEMENT MARKING
- DIRECTION OF TRAFFIC

NOTES:

1. SEE STD DWG ST 15 FOR SIGN AND PAVEMENT MARKING DETAILS.
2. ALIGN EXPRESS ELECTRONIC TOLL (RS3-48b) SIGN WITH EXIT DIRECTION GUIDE SIGN WHERE POSSIBLE. EXIT DIRECTION SIGN MUST BE LOCATED AT THE THEORETICAL GORE OR AT THE POINT OF RAMP WIDENING, DEPENDING ON EXIT RAMP CONFIGURATION.
3. ALIGN PREFERENTIAL LANE ACCESS POINTS FOR OPPOSING DIRECTIONS WHEN POSSIBLE SUCH THAT THE SIGN SUPPORTS CAN BE USED IN COMMON.
4. PLACE EXPRESS PAVEMENT MARKING AND HOV LANE SYMBOL PAVEMENT MARKING BEFORE EGRESS, ONCE IN THE ACCESS OPENING, AFTER THE ENTRANCE, AND EVERY 1/4 MILE IN THE PREFERENTIAL LANE.
5. PLACE THE HOV LANE SYMBOL PAVEMENT MARKING 100 FT AFTER THE EXPRESS PAVEMENT MARKING (TYPICAL).
6. PLACE BARRIER MOUNTED SIGNS BACK TO BACK WHERE APPLICABLE. PLACE SIGNS PERPENDICULAR TO TRAFFIC UNLESS THE SIGN IS WIDER THAN 4 FT. SKEW SIGNS WIDER THAN 4 FT UP TO 45 DEGREES SO THE SIGN DOES NOT PROJECT MORE THAN 1 FT BEYOND THE OUTER EDGE OF THE BARRIER.
7. PLACE SIGN IDENTIFICATION CODE SIGNS D AND E BACK-TO-BACK WHERE POSSIBLE.
8. PLACE THE EXPRESS EGRESS DIRECTION (ES8-5) SIGN OPPOSITE THE END OF THE DOUBLE SOLID WHITE LINE, AT THE BEGINNING OF THE ACCESS OPENING.
9. USE A PREFERENTIAL LANE WIDTH OF 11 FT MINIMUM. USE A SEPARATION WIDTH OF 4 FT BETWEEN THE PREFERENTIAL LANE AND GENERAL PURPOSE LANE ONE (SEE STD DWG ST 15, STRIPING DETAILS). USE A GENERAL PURPOSE LANE ONE WIDTH OF 11 FT MINIMUM. USE A LANE WIDTH OF 12 FT FOR ALL OTHER LANES, INCLUDING AUXILIARY LANES (UNLESS OTHERWISE APPROVED BY REGION TRAFFIC ENGINEER).
10. SEE STD DWG ST 1 FOR PAVEMENT MARKING LINE DIMENSIONS.

REVISIONS

NO.	DATE	APPR.	REMARKS

UTAH DEPARTMENT OF TRANSPORTATION
STANDARD DRAWINGS FOR ROAD AND BRIDGE CONSTRUCTION
SALT LAKE CITY, UTAH

RECOMMENDED FOR APPROVAL — JAN.01, 2017 DATE
CHAIRMAN STANDARDS COMMITTEE APPROVED — JAN.01, 2017 DATE
DEPUTY DIRECTOR

PREFERENTIAL LANE ACCESS OPENING DETAILS
STANDARD DRAWING TITLE

STD. DWG. NO.
ST 16

28-NOV-2016 DGN File:L:\Standard Drawings\Imperial\2017 Approved\1-All Drawings\ST16.dgn

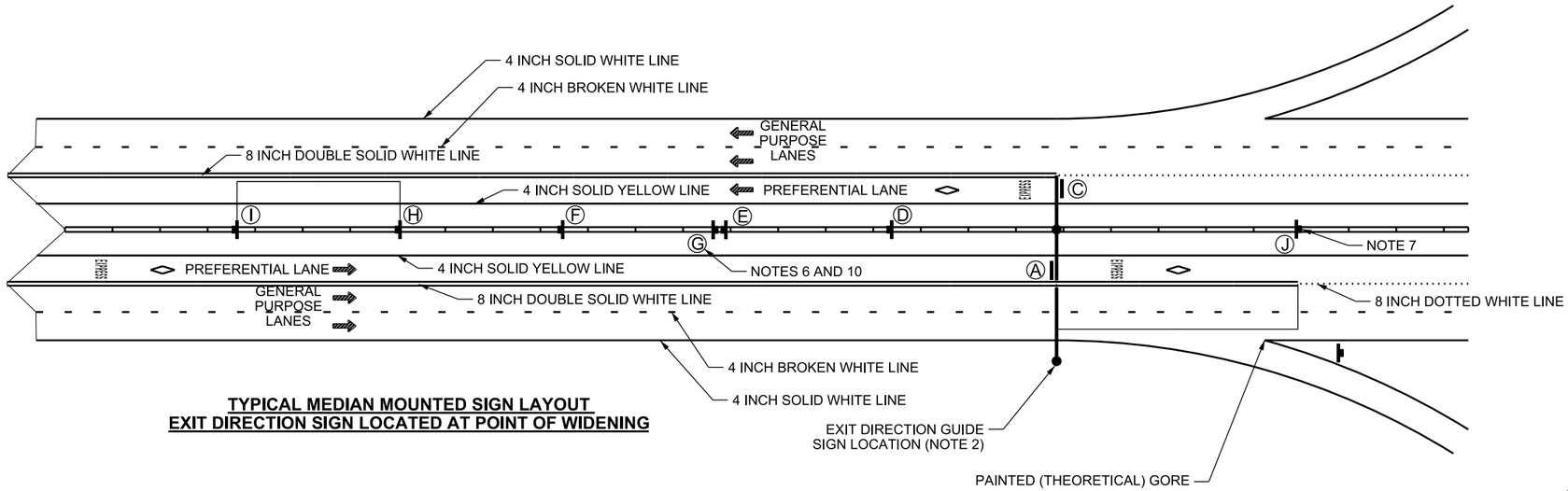

TYPICAL MEDIAN MOUNTED SIGN LAYOUT
EXIT DIRECTION SIGN LOCATED AT POINT OF WIDENING

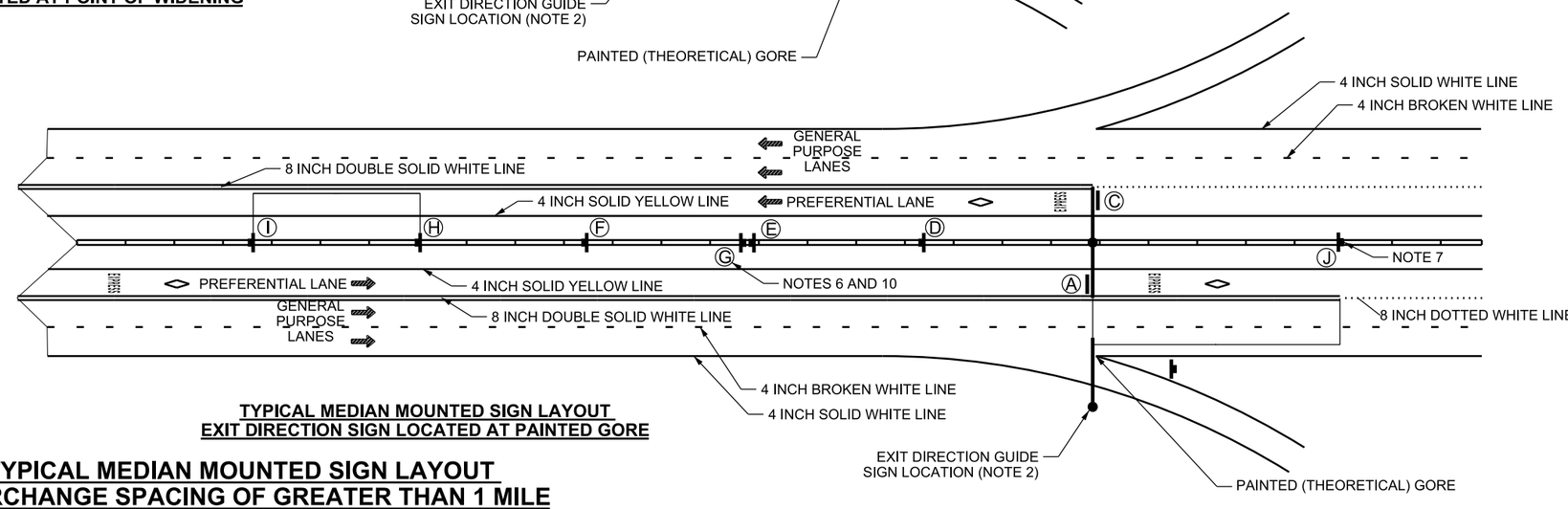

TYPICAL MEDIAN MOUNTED SIGN LAYOUT
EXIT DIRECTION SIGN LOCATED AT PAINTED GORE

TYPICAL MEDIAN MOUNTED SIGN LAYOUT INTERCHANGE SPACING OF GREATER THAN 1 MILE ACCESS OPENING TO ACCESS OPENING

LEGEND

- BARRIER OR POST MOUNTED SIGN
- OVERHEAD MOUNTED SIGN
- Ⓐ SIGN IDENTIFICATION CODE (SEE STD DWG ST 15)
- HOV SYMBOL PAVEMENT MARKING
- EXPRESS EXPRESS LANE PAVEMENT MARKING
- DIRECTION OF TRAFFIC

NOTES:

1. SEE STD DWG ST 15 FOR SIGN AND PAVEMENT MARKING DETAILS.
2. ALIGN EXPRESS ELECTRONIC TOLL (RS3-48b) SIGN WITH EXIT DIRECTION GUIDE SIGN WHERE POSSIBLE. EXIT DIRECTION SIGN MAY BE LOCATED AT THE THEORITICAL GORE OR AT THE POINT OF RAMP WIDENING, DEPENDING ON EXIT RAMP CONFIGURATION.
3. PLACE EXPRESS PAVEMENT MARKING AND HOV LANE SYMBOL PAVEMENT MARKING BEFORE EGRESS, ONCE IN THE ACCESS OPENING, AFTER THE ENTRANCE, AND EVERY 1/4 MILE IN THE PREFERENTIAL LANE.
4. PLACE THE HOV LANE SYMBOL PAVEMENT MARKING 100 FT AFTER THE EXPRESS PAVEMENT MARKING (TYPICAL).
5. PLACE BARRIER MOUNTED SIGNS BACK TO BACK WHERE APPLICABLE. PLACE SIGNS PERPENDICULAR TO TRAFFIC UNLESS THE SIGN IS WIDER THAN 4 FT. SKEW SIGNS WIDER THAN 4 FT UP TO 45 DEGREES SO THE SIGN DOES NOT PROJECT MORE THAN 1 FT BEYOND THE OUTER EDGE OF THE BARRIER.
6. PLACE THE EXPRESS EGRESS FRACTIONAL MILE ADVANCE (ES8-6) SIGN 1/2 MILE BEFORE THE END OF THE DOUBLE SOLID WHITE LINE. LOCATION MAY VARY FROM THAT SHOWN ON THE DETAIL TO ACHIEVE REQUIRED DISTANCE.
7. PLACE THE EXPRESS EGRESS DIRECTION (ES8-5) SIGN OPPOSITE THE END OF THE DOUBLE SOLID WHITE LINE, AT THE BEGINNING OF THE ACCESS OPENING.
8. USE A PREFERENTIAL LANE WIDTH OF 11 FT MINIMUM. USE A SEPARATION WIDTH OF 4 FT BETWEEN THE PREFERENTIAL LANE AND GENERAL PURPOSE LANE ONE (SEE STD DWG ST 15, STRIPING DETAILS). USE A GENERAL PURPOSE LANE ONE WIDTH OF 11 FT MINIMUM. USE A LANE WIDTH OF 12 FT FOR ALL OTHER LANES, INCLUDING AUXILIARY LANES.
9. SPACE ALL POST ACCESS OPENING SIGNS (SIGN IDENTIFICATION CODES D, E, F, G, H, AND I) AT A TYPICAL DISTANCE OF 800 FT.
10. PLACE SIGN IDENTIFICATION CODE SIGNS E AND G BACK-TO-BACK WHERE POSSIBLE.
11. SEE STD DWG ST 01 FOR PAVEMENT MARKING LINE DIMENSIONS.

REVISIONS

NO.	DATE	APPR.	REMARKS

UTAH DEPARTMENT OF TRANSPORTATION
STANDARD DRAWINGS FOR ROAD AND BRIDGE CONSTRUCTION
SALT LAKE CITY, UTAH

RECOMMENDED FOR APPROVAL — JAN. 01, 2017 DATE
CHAIRMAN STANDARDS COMMITTEE APPROVED — JAN. 01, 2017 DATE
DEPUTY DIRECTOR

PREFERENTIAL LANE MEDIAN SIGNING SPACING GREATER 1 MILE
STANDARD DRAWING TITLE

STD. DWG. NO.
ST 17

DGN File: L:\Standard Drawings\Imperial\2017 Approved\1-All Drawings\ST17.dgn
28-NOV-2016

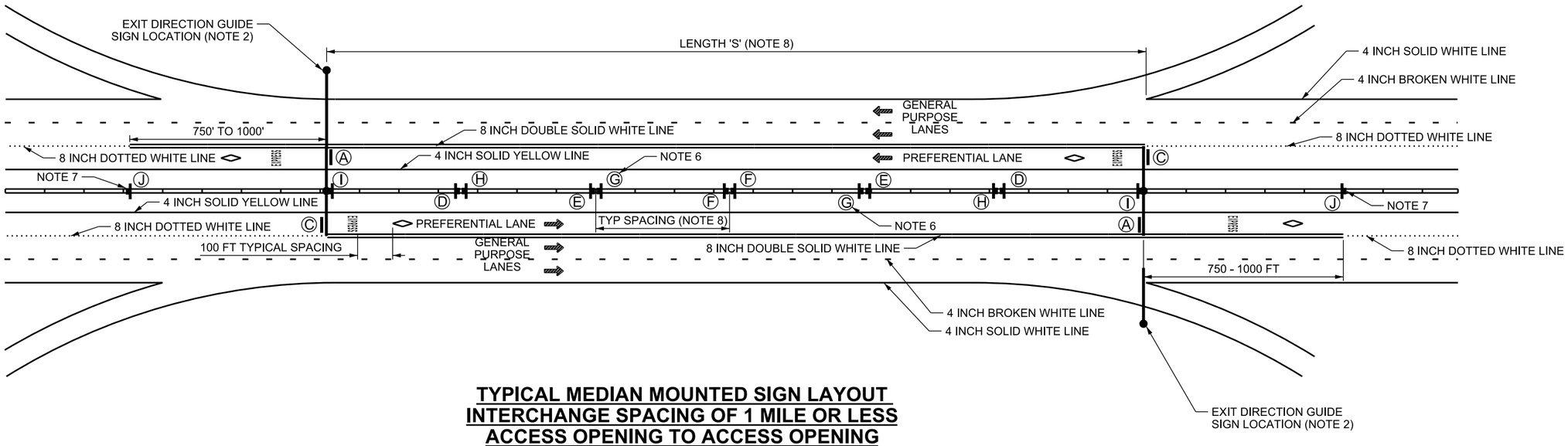

TYPICAL MEDIAN MOUNTED SIGN LAYOUT
INTERCHANGE SPACING OF 1 MILE OR LESS
ACCESS OPENING TO ACCESS OPENING

LEGEND

- BARRIER OR POST MOUNTED SIGN
- OVERHEAD MOUNTED SIGN
- Ⓐ SIGN IDENTIFICATION CODE (SEE STD DWG ST 15)
- HOV SYMBOL PAVEMENT MARKING
- EXPRESS LANE PAVEMENT MARKING
- DIRECTION OF TRAFFIC

NOTES:

1. SEE STD DWG ST 15 FOR SIGN AND PAVEMENT MARKING DETAILS.
2. ALIGN EXPRESS ELECTRONIC TOLL (RS3-48b) SIGN WITH EXIT DIRECTION GUIDE SIGN WHERE POSSIBLE. EXIT DIRECTION SIGN MUST BE LOCATED AT THE THEORITICAL GORE OR AT THE POINT OF RAMP WIDENING, DEPENDING ON EXIT RAMP CONFIGURATION.
3. PLACE EXPRESS PAVEMENT MARKING AND HOV LANE SYMBOL PAVEMENT MARKING BEFORE EGRESS, ONCE IN THE ACCESS OPENING, AFTER THE ENTRANCE, AND EVERY 1/4 MILE IN THE PREFERENTIAL LANE.
4. PLACE THE HOV LANE SYMBOL PAVEMENT MARKING 100 FT AFTER THE EXPRESS PAVEMENT MARKING (TYPICAL).
5. PLACE BARRIER MOUNTED SIGNS BACK TO BACK WHERE APPLICABLE. PLACE SIGNS PERPENDICULAR TO TRAFFIC UNLESS THE SIGN IS WIDER THAN 4 FT. SKEW SIGNS WIDER THAN 4 FT UP TO 45 DEGREES SO THE SIGN DOES NOT PROJECT MORE THAN 1 FT BEYOND THE OUTER EDGE OF THE BARRIER.
6. PLACE THE EXPRESS EGRESS FRACTIONAL MILE ADVANCE (ES8-6) SIGN 1/2 MILE PRIOR TO THE END OF THE DOUBLE SOLID WHITE LINE. LOCATION MAY VARY FROM THAT SHOWN ON THE DETAIL TO ACHIEVE THE REQUIRED DISTANCE.
7. PLACE THE EXPRESS EGRESS DIRECTION (ES8-5) SIGN OPPOSITE THE END OF THE DOUBLE SOLID WHITE LINE, AT THE BEGINNING OF THE ACCESS OPENING.
8. SPACE ALL POST ACCESS OPENING (SIGN IDENTIFICATION CODES D, E, F, G, H, AND I) SIGNS AT A DISTANCE OF S/6.
9. PLACE MEDIAN MOUNTED SIGNS (SIGN IDENTIFICATION CODES D, E, F, G, H, AND I) BACK-TO-BACK WHERE POSSIBLE.
10. USE A PREFERENTIAL LANE WIDTH OF 11 FT MINIMUM. USE A SEPARATION WIDTH OF 4 FT BETWEEN THE PREFERENTIAL LANE AND GENERAL PURPOSE LANE ONE (SEE STD DWG ST 15, STRIPING DETAILS). USE A GENERAL PURPOSE LANE ONE WIDTH OF 11 FT MINIMUM. USE A LANE WIDTH OF 12 FT FOR ALL OTHER LANES, INCLUDING AUXILIARY LANES.
11. SEE STD DWG ST 1 FOR PAVEMENT MARKING LINE DIMENSIONS.

REVISIONS			
NO.	DATE	APPR.	REMARKS

UTAH DEPARTMENT OF TRANSPORTATION
STANDARD DRAWINGS FOR ROAD AND BRIDGE CONSTRUCTION
SALT LAKE CITY, UTAH

RECOMMENDED FOR APPROVAL — JAN.01.2017 DATE
CHAIRMAN STANDARDS COMMITTEE APPROVED — JAN.01.2017 DATE
DEPUTY DIRECTOR

STANDARD DRAWING TITLE
PREFERENTIAL LANE MEDIAN SIGNING SPACING EQUAL TO OR LESS THAN 1 MILE

STD. DWG. NO.
ST 18

28-NOV-2016 DGN File:L:\Standard Drawings\Imperial\2017 Approved\1-all Drawings\ST18.dgn

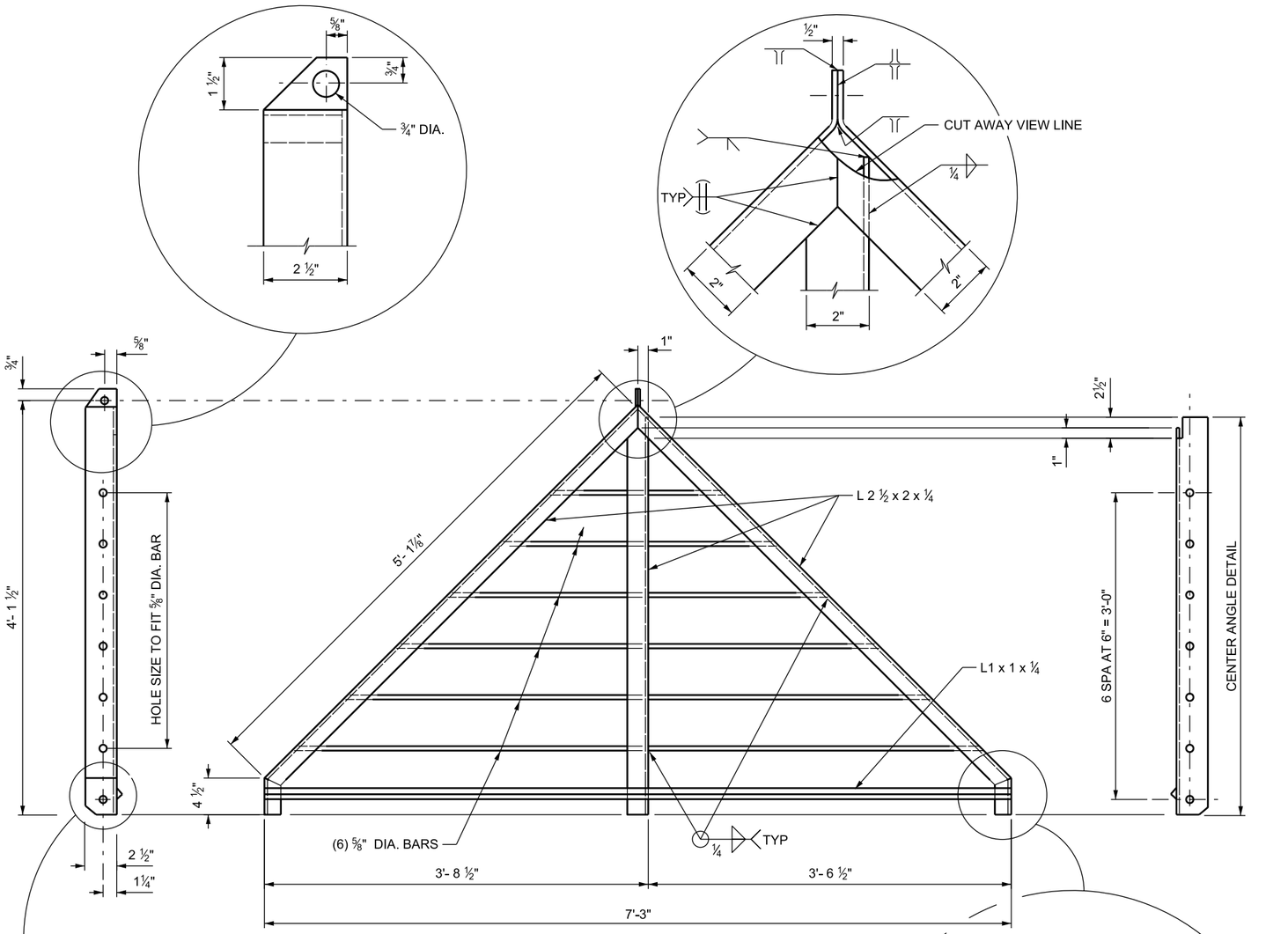

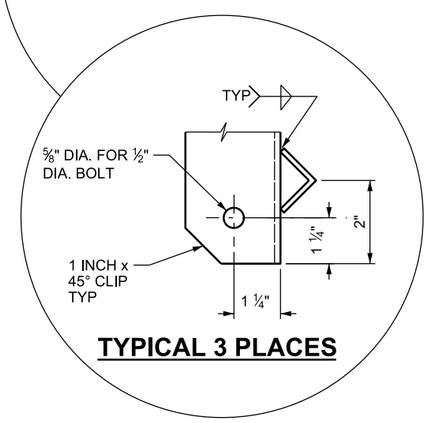

TYPICAL 3 PLACES

WELDED END GUARD UNIT

WT.W/BOLTS, U-CLAMP 115 LBS (2 REQUIRED)

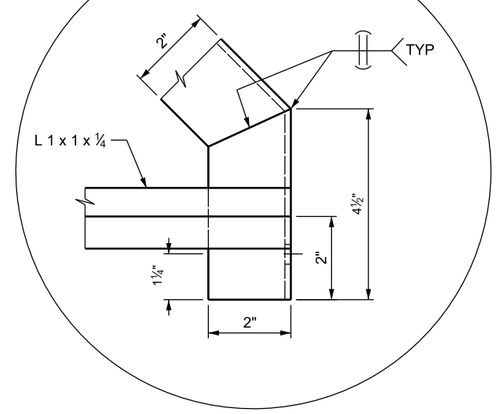

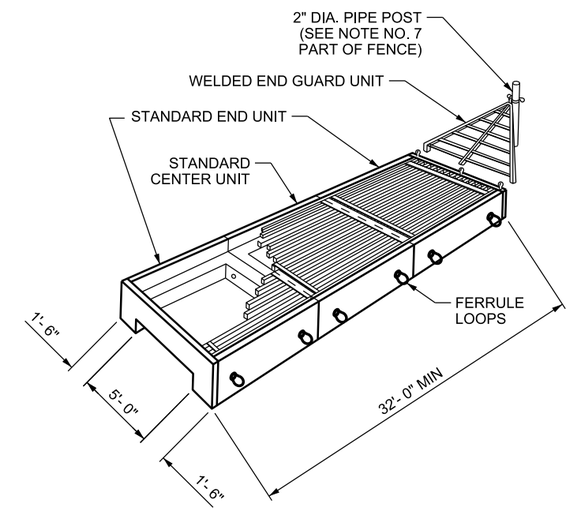

DESIGN DATA

HL-93 LOADING IN ACCORDANCE WITH AASHTO LRFD BRIDGE DESIGN AND INTERM SPECIFICATIONS
f'c = 4,000 psi
fy = 60,000 psi (REINFORCING STEEL)
Fy = 36,000 psi (STRUCTURAL STEEL)
n = 8

GENERAL NOTES:

1. USE COATED DEFORMED-CARBON REINFORCING STEEL BARS CONFORMING TO AASHTO M 284 OR M 111 AND M 31 GRADE 60.
2. USE STRUCTURAL STEEL CONFORMING TO AASHTO M 270 GRADE 36 AND GALVANIZE AFTER FABRICATION IN ACCORDANCE WITH AASHTO M 111 (ASTM A 123).
3. USE BOLTS THAT CONFORM TO ASTM A 307, WASHERS THAT CONFORM TO ASTM F 436, AND NUTS THAT CONFORM TO ASTM A 563.
4. OVER-EXCAVATE SOIL 2 FT AND BACKFILL WITH FREE DRAINING GRANULAR BACKFILL AND COMPACT. SEE SECTION H-H, STD DWG SW 1B.
5. ANY MODIFICATION REQUIRES APPROVAL BY THE ENGINEER.
6. USE CONCRETE CLASS AA(AE).
7. SEE STD DWG FG 6 CHAIN LINK FENCE FOR FENCE END POST AND INSTALLATION DETAILS.

REVISIONS

NO.	DATE	APPR.	REMARKS

UTAH DEPARTMENT OF TRANSPORTATION
STANDARD DRAWINGS FOR ROAD AND BRIDGE CONSTRUCTION
SALT LAKE CITY, UTAH

RECOMMENDED FOR APPROVAL — JAN.01.2017 DATE
CHAIRMAN STANDARDS COMMITTEE APPROVED — JAN.01.2017 DATE
DEPUTY DIRECTOR

WELDED END GUARD UNIT

STANDARD DRAWING TITLE

STD. DWG. NO.
SW 1A

DGN File:L:\Standard Drawings\Imperial\2017 Approved\1-All Drawings\SW01A.dgn
28-NOV-2016

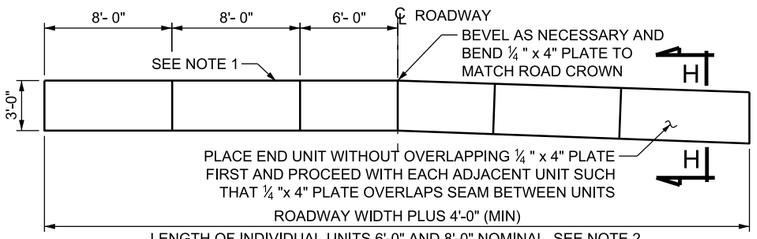

TYPICAL CATTLE GUARD INSTALLATION

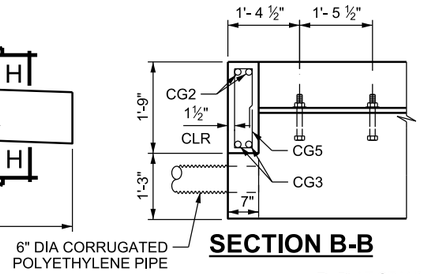

SECTION B-B

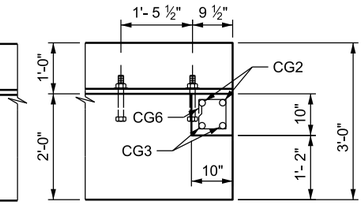

SECTION C-C

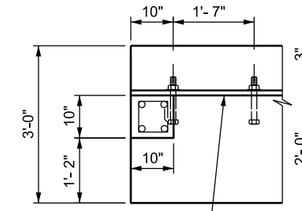

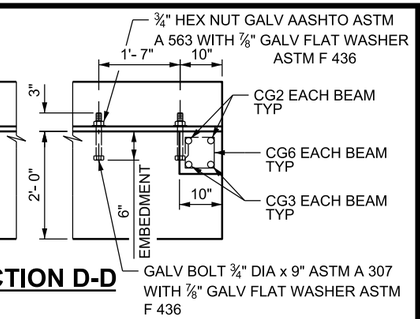

SECTION D-D

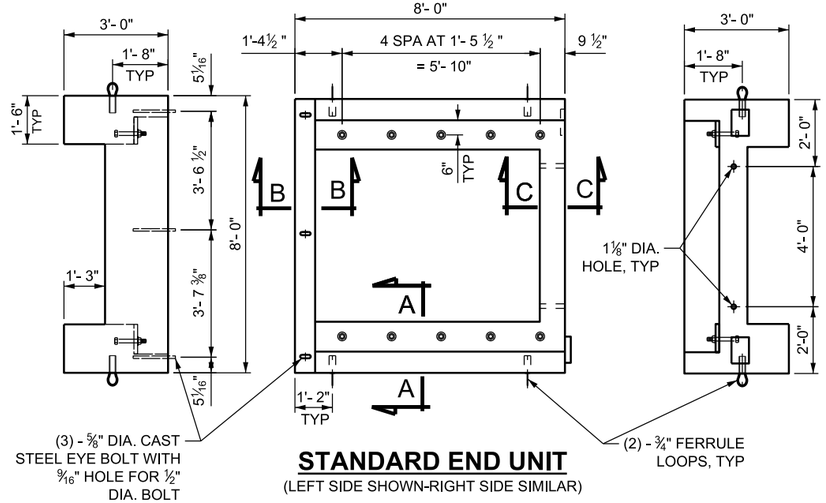

STANDARD END UNIT

(LEFT SIDE SHOWN-RIGHT SIDE SIMILAR)

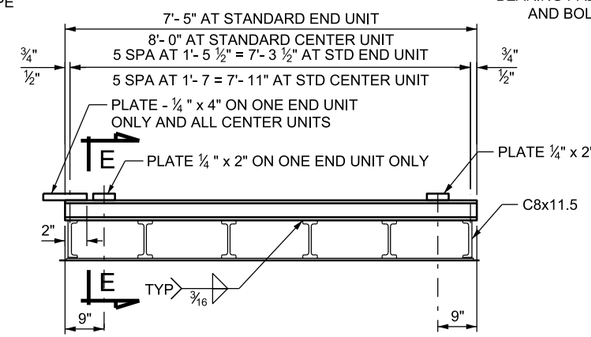

TRAFFIC GRILL UNIT

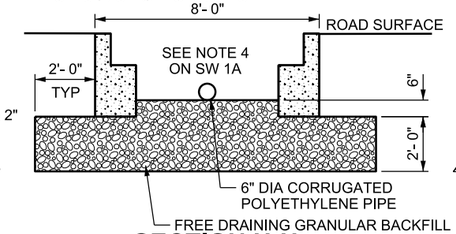

SECTION H-H

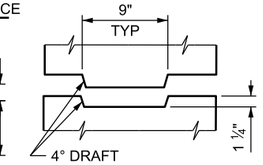

SECTION F-F

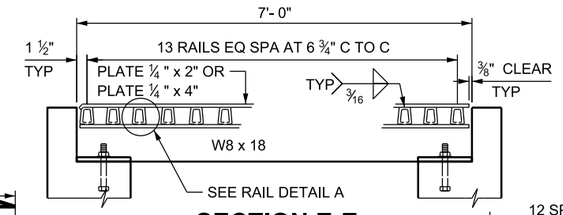

SECTION E-E

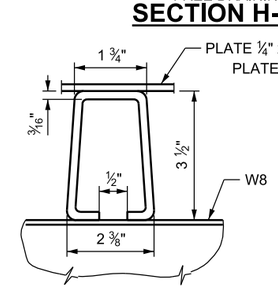

RAIL DETAIL A

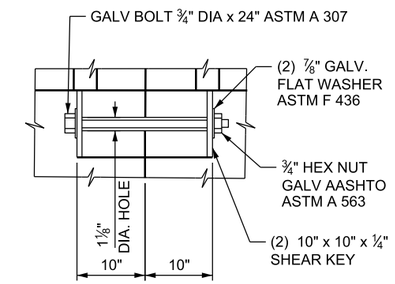

SECTION G-G

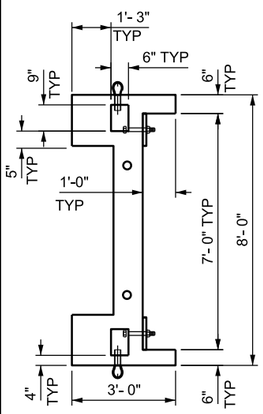

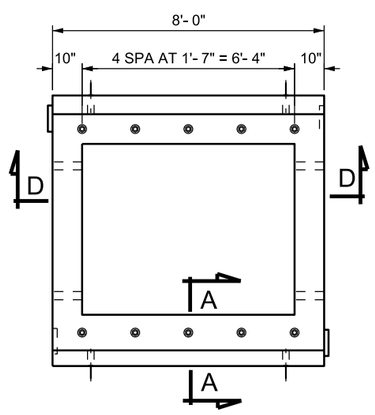

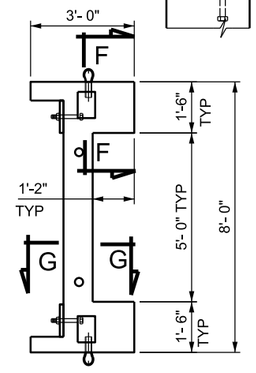

STANDARD CENTER UNIT

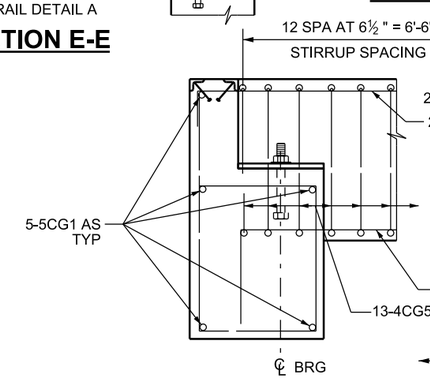

SECTION A-A

END UNIT

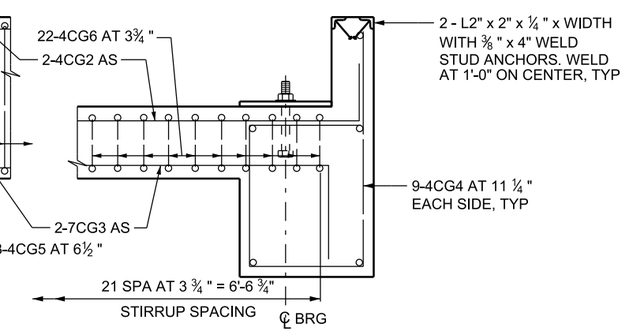

SECTION A-A

CENTER UNIT

✳ CENTER UNIT HAS NO CG5 BARS AND DOUBLE CG6 BARS.

REINFORCING STEEL SCHEDULE FOR END UNIT ✳

MARK	LOCATION	SIZE	REQ'D	LENGTH	TOTAL	SKETCH A	SKETCH B
CG1	CATTLE GUARD	5	10	7'- 8"	76'- 8"		
CG2	CATTLE GUARD	4	4	9'- 0"	36'-0"	7'- 8"	8"
CG3	CATTLE GUARD	7	4	9'-4"	37'-4"	7'-0"	1'-2"
CG4	CATTLE GUARD	4	18	6'-8"	120'-0"		

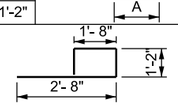

MARK	LOCATION	SIZE	REQ'D	LENGTH	TOTAL	SKETCH
CG5	CATTLE GUARD	4	13	4'-0"	52'-0"	
CG6	CATTLE GUARD	4	22	2'-4"	51'-4"	

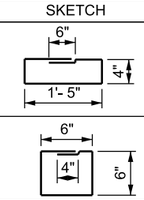

STRUCTURAL STEEL PER UNIT

ITEM	REQ'D	SIZE	LENGTH
BEAM	4	W8 x 18	6'-11¼"
CHANNEL	2	C8 x 11.5	6'-11¼"
RAIL END UNIT	13		7'- 5"
RAIL CENTER UNIT	13		8'- 0"
ANGLE	4	L2 x 2 x¼	8'- 0"
STUD ANCHOR	32	⅜" DIA	0'- 4"

NOTES:

1. TOP OF THE CATTLE GUARD PARALLEL TO THE HIGHWAY PROFILE GRADE. ROTATE UNITS TO ACCOMPLISH THIS IF REQUIRED.
2. SEE STD DWG SW 1C FOR 6'-0" UNIT DETAILS.
3. PROVIDE 2 INCH CONCRETE COVER TO REINFORCING STEEL EXCEPT WHERE NOTED OTHERWISE.

REVISIONS

NO.	DATE	APPR.	REMARKS

UTAH DEPARTMENT OF TRANSPORTATION
STANDARD DRAWINGS FOR ROAD AND BRIDGE CONSTRUCTION
SALT LAKE CITY, UTAH

RECOMMENDED FOR APPROVAL — JAN.01, 2017 DATE
CHAIRMAN STANDARDS COMMITTEE APPROVED — JAN.01, 2017 DATE
DEPUTY DIRECTOR

STANDARD DRAWING TITLE
8'-0" PRECAST CONCRETE CATTLE GUARD

STD. DWG. NO.
SW 1B

DGN File: L:\Standard Drawings\Imperial\2017 Approved\1-All Drawings\SW01B.dgn
28-NOV-2016

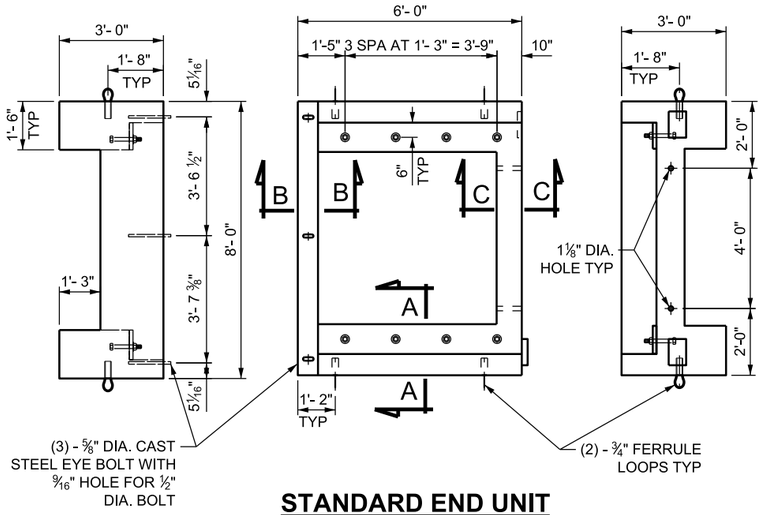

STANDARD END UNIT

(LEFT SIDE SHOWN, RIGHT SIDE SIMILAR)

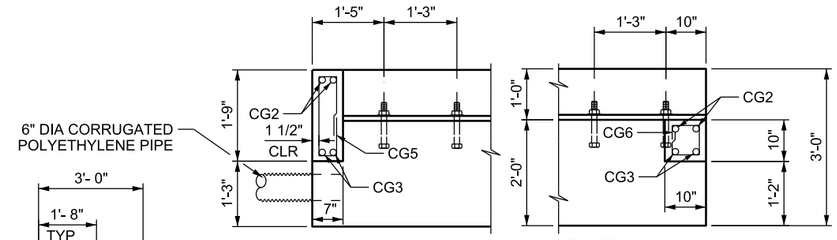

SECTION B-B

SECTION C-C

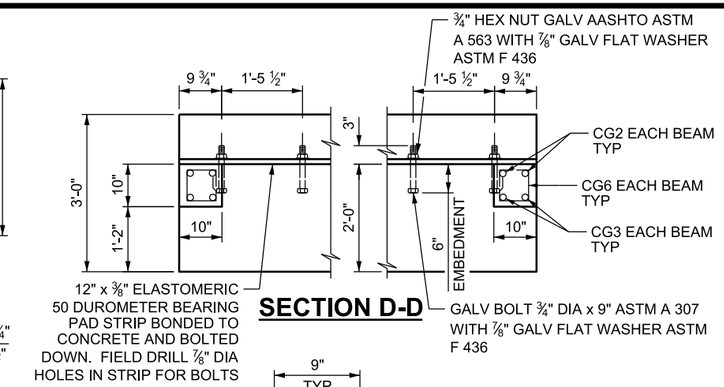

SECTION D-D

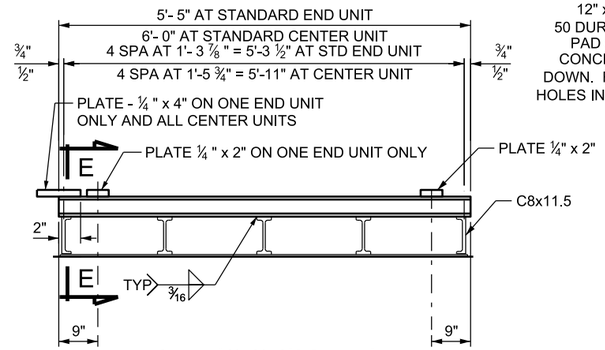

TRAFFIC GRILL UNIT

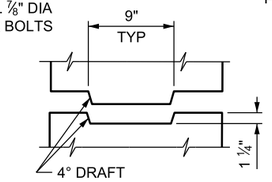

SECTION F-F

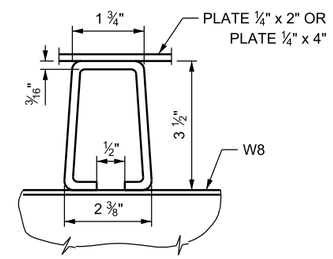

RAIL DETAIL A

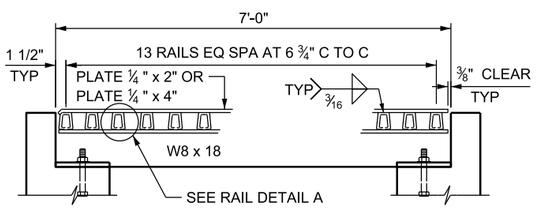

SECTION E-E

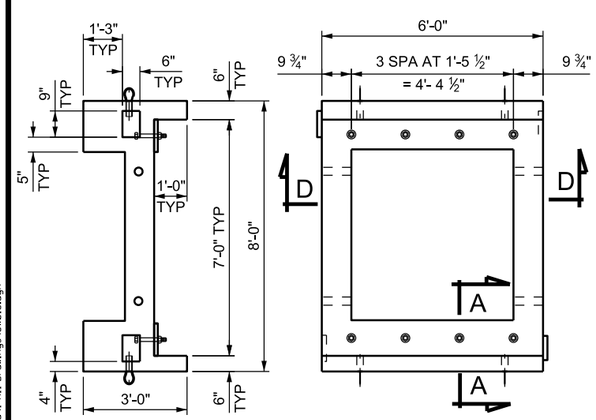

STANDARD CENTER UNIT

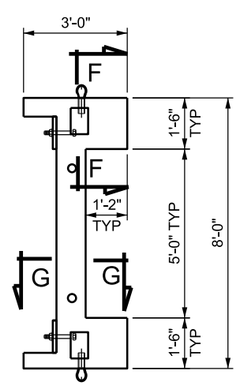

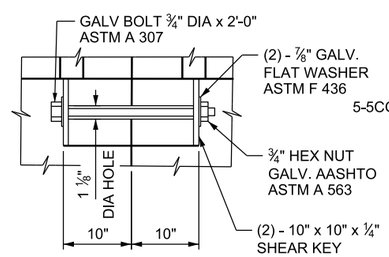

SECTION G-G

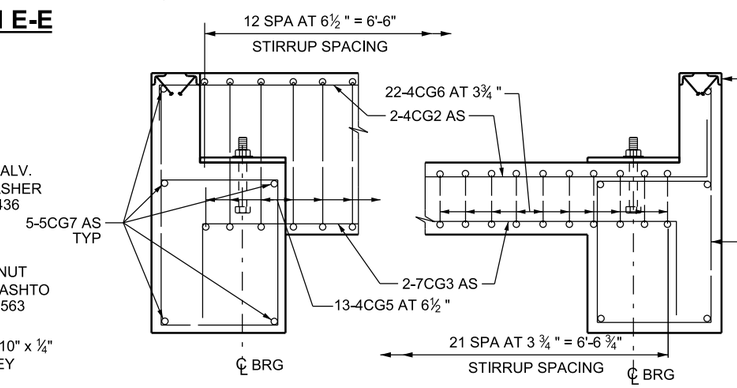

SECTION A-A

END UNIT

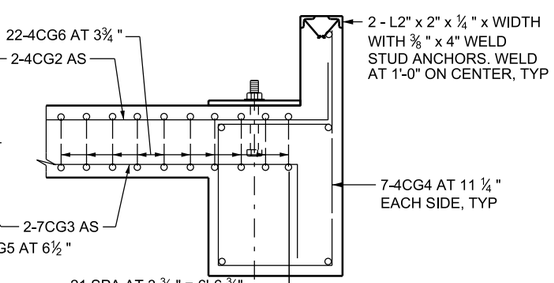

SECTION A-A

CENTER UNIT

✳ CENTER UNIT HAS NO CG5 BARS AND DOUBLE CG6 BARS.

REINFORCING STEEL SCHEDULE FOR END UNIT ✳

MARK	LOCATION	SIZE	REQ'D	LENGTH	TOTAL	SKETCH		
CG7	CATTLE GUARD	5	10	5'-8"	56'-8"			
						A	B	
CG2	CATTLE GUARD	4	4	9'-0"	36'-0"	7'-8"	8"	
CG3	CATTLE GUARD	7	4	9'-4"	37'-4"	7'-0"	1'-2"	
CG4	CATTLE GUARD	4	14	6'-8"	120'-0"			

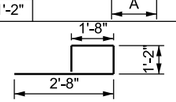

MARK	LOCATION	SIZE	REQ'D	LENGTH	TOTAL	SKETCH
CG5	CATTLE GUARD	4	13	4'-0"	52'-0"	
CG6	CATTLE GUARD	4	22	2'-4"	51'-4"	

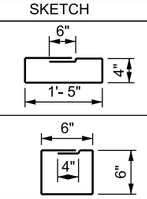

STRUCTURAL STEEL PER UNIT

ITEM	REQ'D	SIZE	LENGTH
BEAM	3	W8 x 18	6'-11 1/4"
CHANNEL	2	C8 x 11.5	6'-11 1/4"
RAIL END UNIT	13		5'-5"
RAIL CENTER UNIT	13		6'-0"
ANGLE	4	L2 x 2 x 1/4	6'-0"
STUD ANCHOR	24	3/8" DIA	0'-4"

NOTES

1. TOP OF THE CATTLE GUARD PARALLEL TO THE HIGHWAY PROFILE GRADE. ROTATE UNITS TO ACCOMPLISH THIS IF REQUIRED.
2. PROVIDE 2 INCH CONCRETE COVER TO REINFORCING STEEL EXCEPT WHERE NOTED OTHERWISE.

NO.	DATE	APPR.	REMARKS
REVISIONS			

UTAH DEPARTMENT OF TRANSPORTATION
STANDARD DRAWINGS FOR ROAD AND BRIDGE CONSTRUCTION
SALT LAKE CITY, UTAH

RECOMMENDED FOR APPROVAL — JAN.01.2017 DATE
CHAIRMAN STANDARDS COMMITTEE APPROVED — JAN.01.2017 DATE
DEPUTY DIRECTOR

STANDARD DRAWING TITLE
6'-0" PRECAST CONCRETE CATTLE GUARD

STD. DWG. NO.
SW 1C

DGN File:L:\Standard_Drawings\Imperial\2017 Approved\1-All Drawings\SW01C.dgn
28-NOV-2016

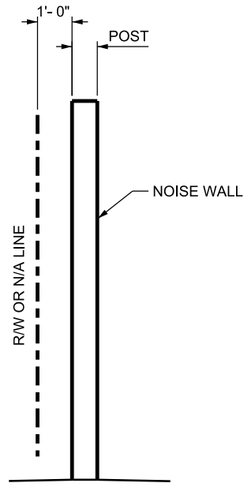

SECTION - ADJACENT TO R/W OR N/A LINE

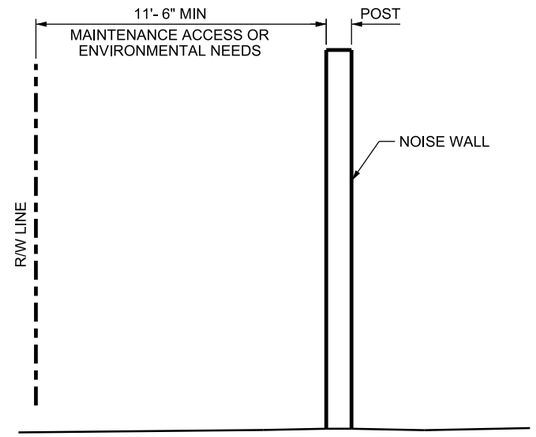

SECTION - ADJACENT TO R/W

WITH MAINTENANCE ACCESS

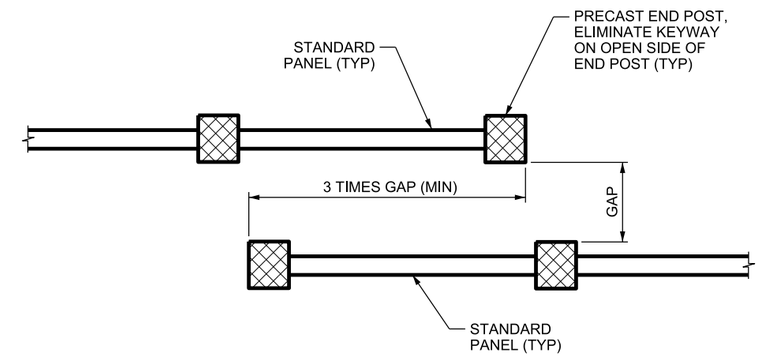

WALL OVERLAP PLAN

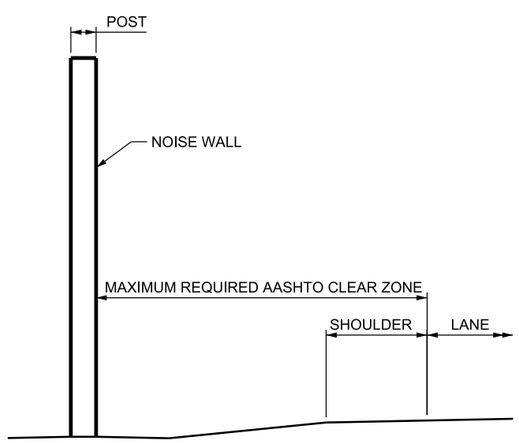

SECTION - ADJACENT TO ROADWAY

WITHOUT BARRIER

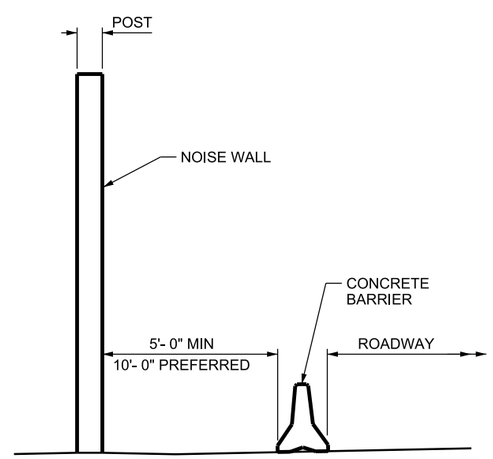

SECTION - ADJACENT TO ROADWAY

WITH BARRIER

NOTES

1. SLOPE FINISHED GRADE TO DRAIN AWAY FROM WALL.
2. PROVIDE MAINTENANCE ACCESS BETWEEN NOISE WALL AND R/W LINE WHEN NOISE WALL IS NOT PLACED 1 FT INSIDE OF R/W LINE.
3. CONNECT R/W FENCE TO BOTH ENDS OF WALL WHEN PLACING NOISE WALL 1 FT INSIDE OF R/W OR N/A LINE.
4. DO NOT PLACE WALL OUTSIDE OF N/A LINE.
5. OVERLAP NOISE WALL AS SHOWN WHEN AN OPENING IS REQUIRED. SEE PLANS FOR END TREATMENT.
6. REFER TO THE AASHTO ROADSIDE DESIGN GUIDE, FOR THE MAXIMUM REQUIRED CLEAR ZONE.

REVISIONS

NO.	DATE	APPR.	REMARKS

UTAH DEPARTMENT OF TRANSPORTATION
STANDARD DRAWINGS FOR ROAD AND BRIDGE CONSTRUCTION
SALT LAKE CITY, UTAH

RECOMMENDED FOR APPROVAL — JAN.01.2017 DATE
CHAIRMAN STANDARDS COMMITTEE APPROVED — JAN.01.2017 DATE
DEPUTY DIRECTOR

NOISE WALL
PLACEMENT OPTIONS

STANDARD DRAWING TITLE

STD. DWG. NO.
SW 2

DGN File:L:\Standard_Drawings\Imperial\2017 Approved\1-All Drawings\SW02.dgn
28-NOV-2016

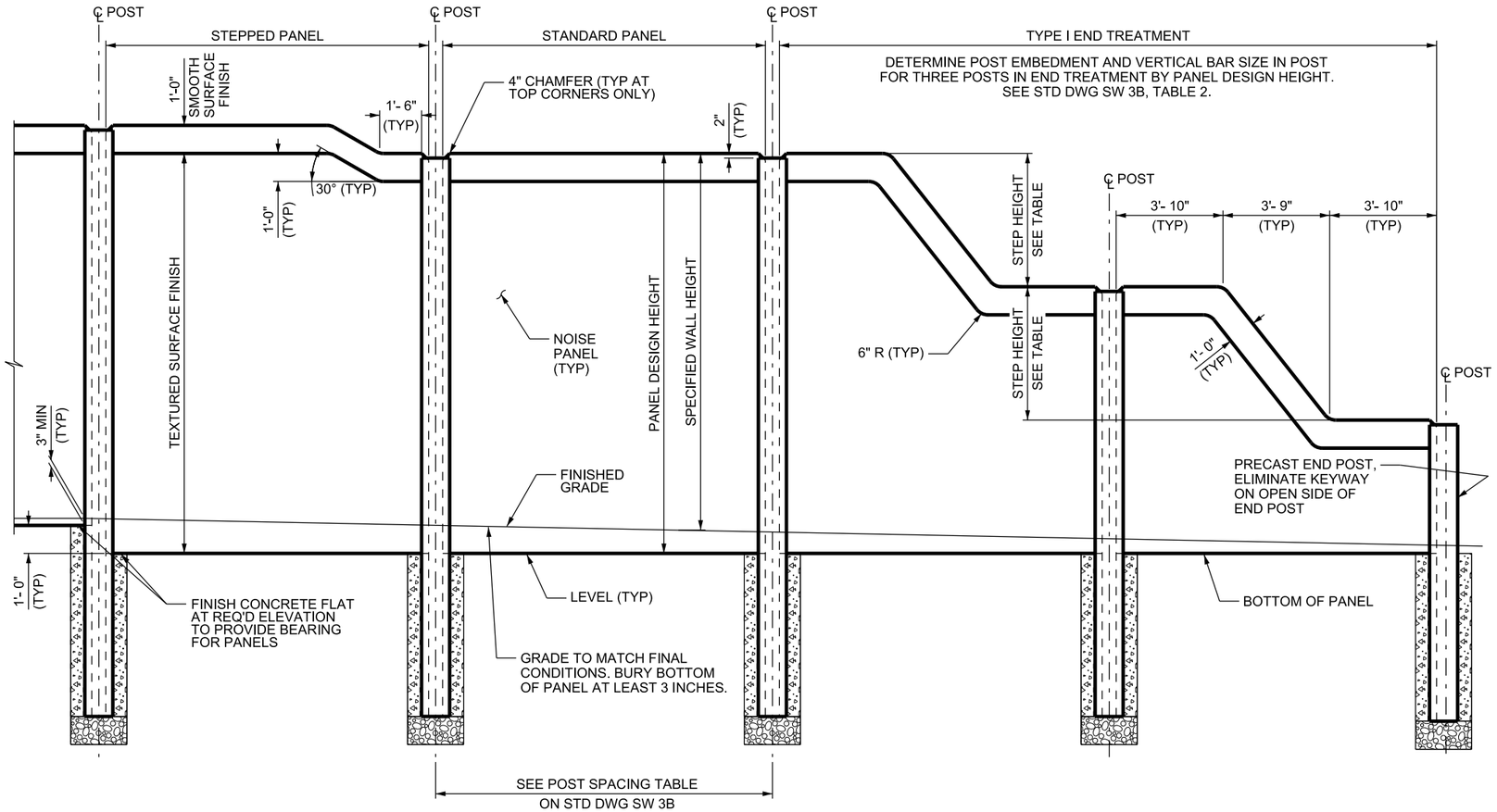

TYPICAL ELEVATION

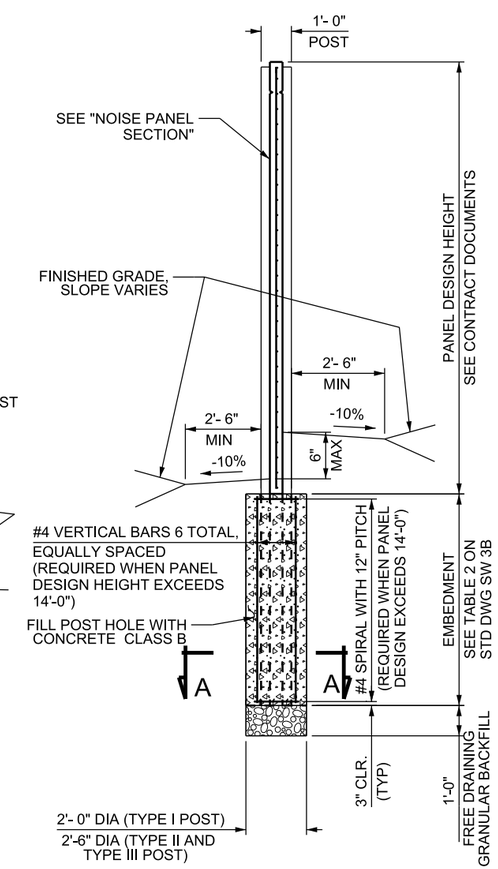

TYPICAL SECTION

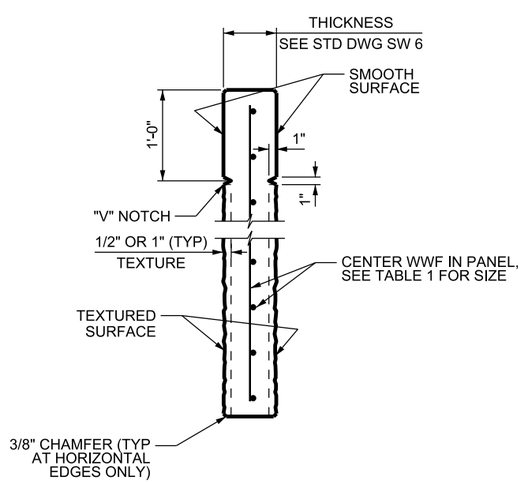

NOISE PANEL SECTION

TABLE 1

PANEL DESIGN HEIGHT	PANEL REINFORCEMENT
≤ 6'-0"	WWF 6x6 - W10xW10
7'-0"	WWF 6x6 - W10xW10
8'-0"	WWF 6x6 - W10xW10
9'-0"	WWF 6x6 - W10xW10
10'-0"	WWF 6x6 - W10xW10
11'-0"	WWF 6x6 - W10xW10
12'-0"	WWF 6x6 - W10xW10
13'-0"	WWF 6x6 - W20xW20
14'-0"	WWF 6x6 - W20xW20
15'-0"	WWF 6x6 - W20xW20
16'-0"	WWF 6x6 - W20xW20
17'-0"	WWF 6x6 - W20xW20

TYPE I END TREATMENT DIMENSIONS

NOISE PANEL DESIGN HEIGHT	STEP HEIGHT	NUMBER OF STEPS
≤ 7'-0"	NONE	NONE
8'-0"	3'-0"	1
9'-0"	4'-0"	1
10'-0"	4'-0"	1
11'-0"	5'-0"	1
12'-0"	3'-6"	2
13'-0"	4'-0"	2
14'-0"	4'-6"	2
15'-0"	4'-6"	2
16'-0"	5'-0"	2
17'-0"	5'-6"	2

DESIGN DATA

AASHTO LRFD BRIDGE DESIGN SPECIFICATIONS

PRECAST PANELS & POSTS: CONCRETE CLASS AA(AE) f'c= 5,000 psi;
fy (REINF) = 60,000 psi; n=8

POST HOLES: CONCRETE CLASS B f'c= 2,500 psi
fy (REINF) = 60,000 psi; n = 10

NOTES

1. CHAMFER EXPOSED CONCRETE CORNERS AS SHOWN.
2. SEE CONTRACT DOCUMENTS FOR LOCATION AND SPECIFIED HEIGHT OF PRECAST NOISE WALL.
3. ALL NOISE PANELS ARE:
   HEIGHT: 6 FT MIN TO 17 FT MAX (1 FT INCREMENTS)
   LENGTH: 11 FT - 5 INCHES LONG
   THICKNESS: 7 INCHES
4. DETERMINE PANEL HEIGHTS AND LOCATIONS OF PANEL STEPS TO PROVIDE SPECIFIED MINIMUM WALL HEIGHT THROUGHOUT ENTIRE LENGTH OF WALL, EXCLUDING END TREATMENTS.
5. CHANGE ELEVATION AT TOP OF NOISE WALL WITH STEPPED PANEL AS SHOWN ON THIS SHEET.
6. BEGIN AND END NOISE WALL WITH END TREATMENT SPECIFIED IN THE CONTRACT DOCUMENTS. TYPE I END TREATMENT SHOWN ON THIS SHEET.
7. EVENLY SPACE PILASTER POSTS AT 200 FT MAXIMUM INTERVAL WHEN REQUIRED. SEE STD DWG SW 5 FOR PRECAST PILASTER POST DETAILS. SEE CONTRACT DOCUMENTS FOR EXACT LOCATIONS.
8. FORM A TEXTURED SURFACE FINISH ON BOTH SIDES OF NOISE PANEL. SEE CONTRACT DOCUMENTS FOR PRESCRIBED TEXTURED SURFACE FINISHES.
9. SEE STD DWG SW 3B FOR SECTION A-A.

NO.	DATE	APPR.	REMARKS
REVISIONS			

UTAH DEPARTMENT OF TRANSPORTATION
STANDARD DRAWINGS FOR ROAD AND BRIDGE CONSTRUCTION
SALT LAKE CITY, UTAH

RECOMMENDED FOR APPROVAL — JAN.01, 2017 — DATE
CHAIRMAN STANDARDS COMMITTEE APPROVED — JAN.01, 2017 — DATE
DEPUTY DIRECTOR

STANDARD DRAWING TITLE
PRECAST CONCRETE NOISE WALL 1 OF 2

STD. DWG. NO.
SW 3A

28-NOV-2016
DGN File:L:\Standard_Drawings\Imperial\2017 Approved\1-All Drawings\SW03A.dgn

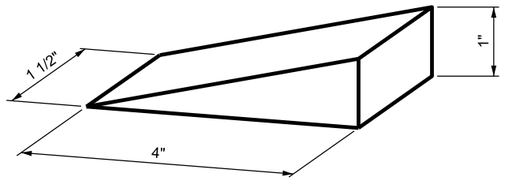

WOOD SHIM DETAIL

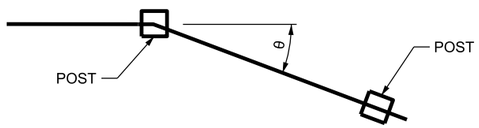

θ DETAIL

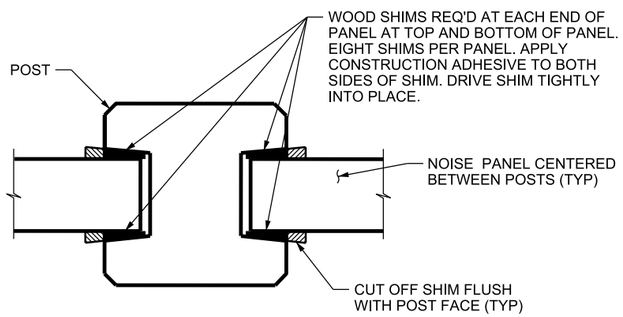

POST & NOISE PANEL DETAIL

TYPE I POST SHOWN
TYPE II POST, TYPE III POSTS, AND PILASTER SIMILAR

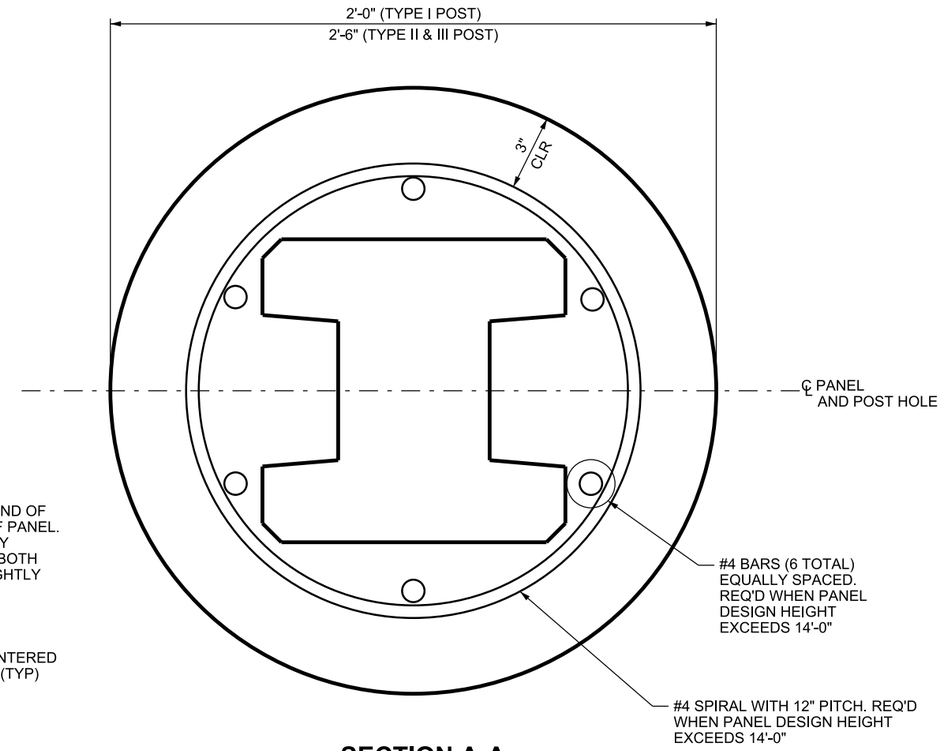

SECTION A-A

SEE STD DWG SW 3A FOR LOCATION;
TYPE I POST SHOWN. TYPE II POST, TYPE III POSTS,
AND PILASTER SIMILAR

POST SPACING

℄ POST TO ℄ POST	REQ'D SPACING
TYPE I TO TYPE I	12'- 0"
TYPE I TO TYPE II	12'- 2"
TYPE I TO TYPE III SIDE A	12'- 0"
TYPE I TO TYPE III SIDE B	12'- 4"
TYPE II TO TYPE II	12'- 4"
TYPE II TO TYPE III SIDE A	12'- 4"
TYPE II TO TYPE III SIDE B	12'- 6"
TYPE III SIDE A TO TYPE III SIDE A	12'- 0"
TYPE III SIDE A TO TYPE III SIDE B	12'- 4"
TYPE III SIDE B TO TYPE III SIDE B	12'- 8"

PILASTER POST IS TYPE I

TABLE 2

PANEL DESIGN HEIGHT	POST	
	VERTICAL BAR SIZE	EMBEDMENT
≤ 6'-0"	#5	5'- 6"
7'-0"	#5	5'- 6"
8'-0"	#5	5'- 6"
9'-0"	#5	5'- 6"
10'-0"	#5	5'- 6"
11'-0"	#6	5'- 9"
12'-0"	#6	6'-0"
13'-0"	#7	6'-3"
14'-0"	#7	6'-6"
15'-0"	#8	6'-9"
16'-0"	#9	7'-3"
17'-0"	#9	7'-3"

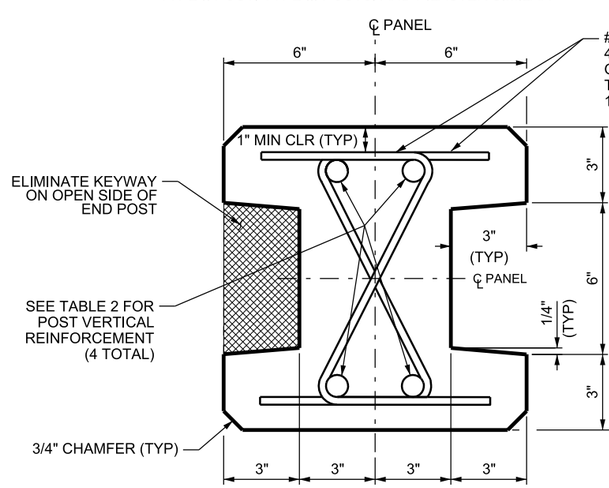

SECTION THROUGH TYPE I POST

θ = 0° TO 10°

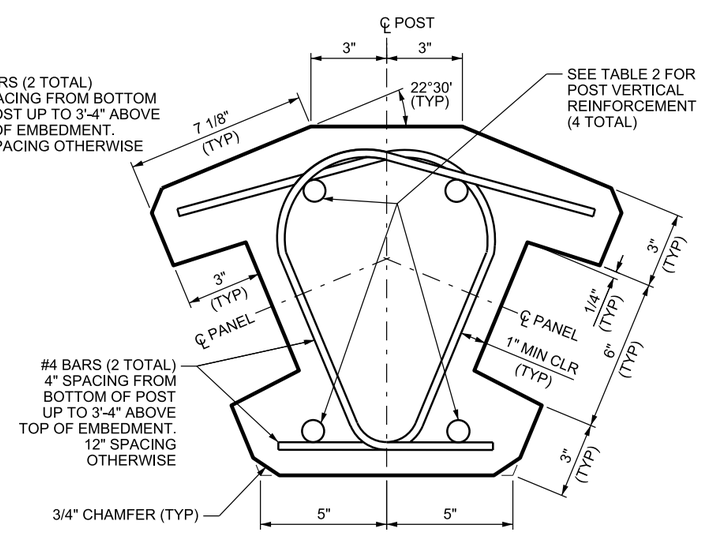

SECTION THROUGH TYPE II POST

θ = 35° TO 55°

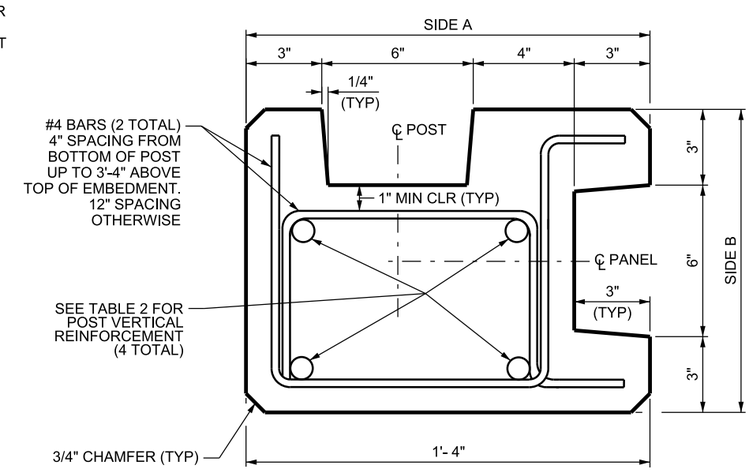

SECTION THROUGH TYPE III POST

θ = 80° TO 100°

REVISIONS

NO.	DATE	APPR.	REMARKS

UTAH DEPARTMENT OF TRANSPORTATION
STANDARD DRAWINGS FOR ROAD AND BRIDGE CONSTRUCTION
SALT LAKE CITY, UTAH

RECOMMENDED FOR APPROVAL — JAN.01, 2017 DATE
CHAIRMAN STANDARDS COMMITTEE APPROVED — JAN.01, 2017 DATE
DEPUTY DIRECTOR

PRECAST CONCRETE NOISE WALL 2 OF 2
STANDARD DRAWING TITLE

STD. DWG. NO.
SW 3B

DGN File: L:\Standard_Drawings\Imperial\2017 Approved\1-All Drawings\SW03B.dgn
28-NOV-2016

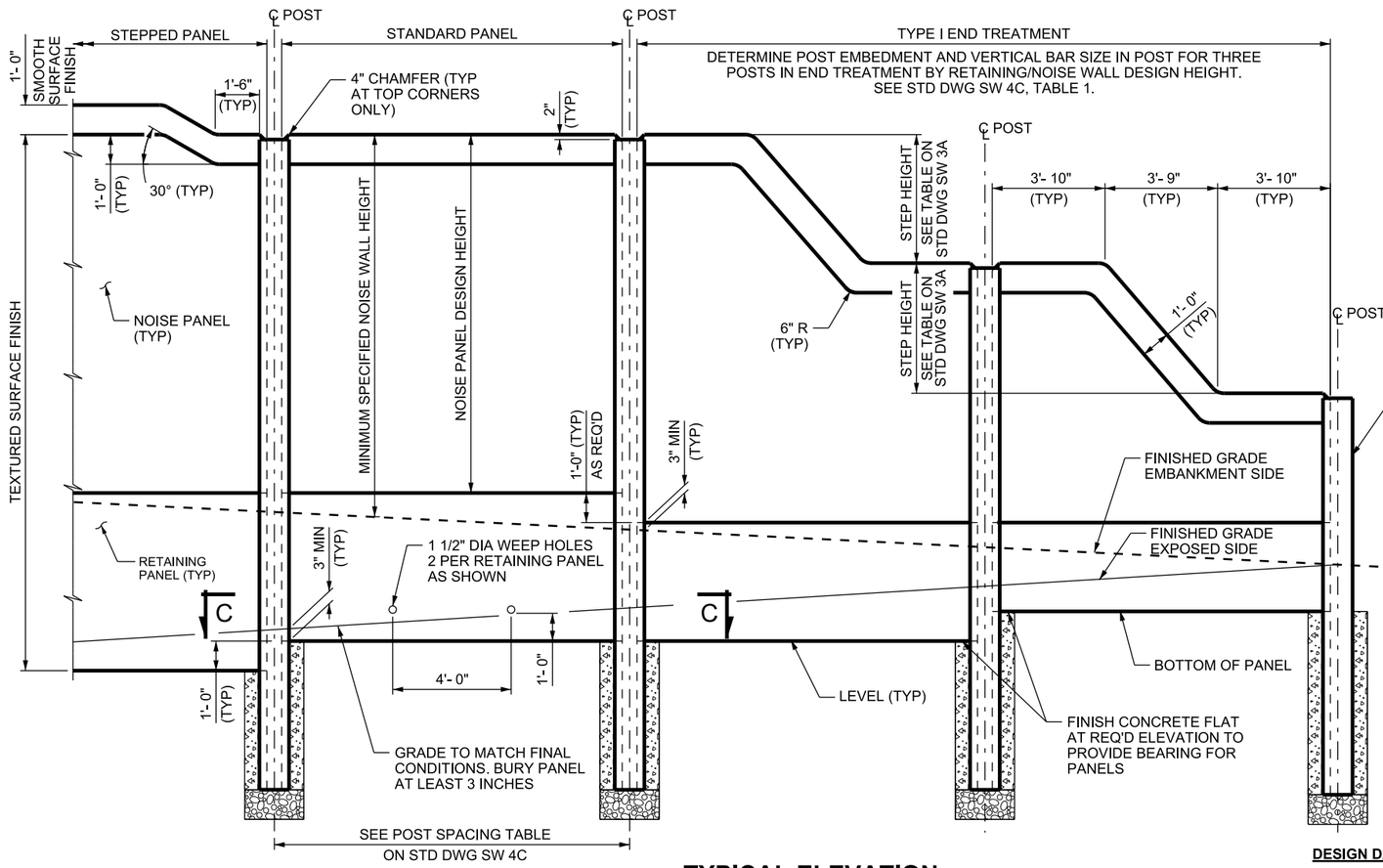

TYPICAL ELEVATION

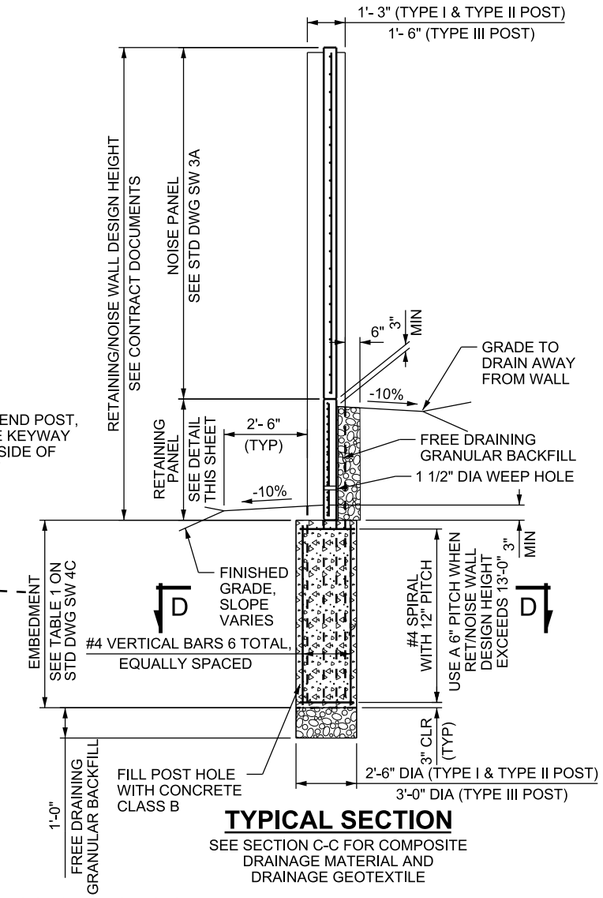

TYPICAL SECTION

SEE SECTION C-C FOR COMPOSITE DRAINAGE MATERIAL AND DRAINAGE GEOTEXTILE

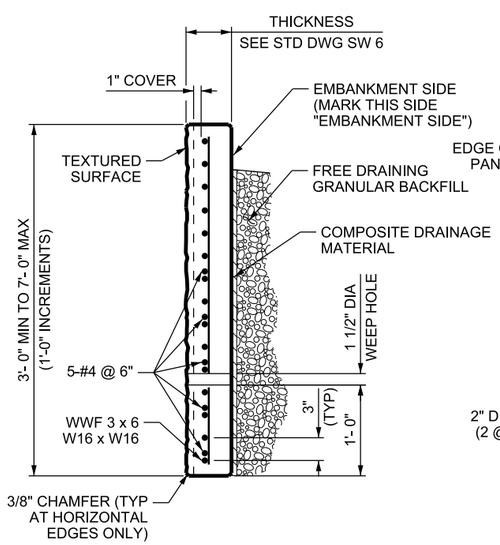

RETAINING PANEL SECTION

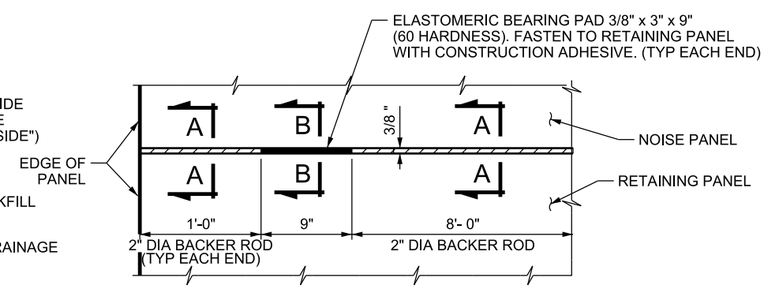

PANEL CONNECTION DETAIL

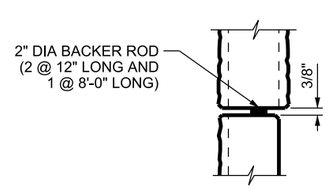

SECTION A-A

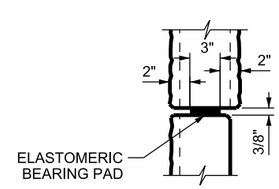

SECTION B-B

DESIGN DATA

AASHTO LRFD BRIDGE DESIGN SPECIFICATIONS

PRECAST PANELS & POSTS: CONCRETE CLASS AA(AE) f'c = 5,000 psi; fy (REINF) = 60,000 psi; n=8

POST HOLES: CONCRETE CLASS B f'c = 2,500 psi; fy (REINF) = 60,000 psi; n=10

NOTES

1. CHAMFER EXPOSED CONCRETE CORNERS AS SHOWN.
2. SEE CONTRACT DOCUMENTS FOR LOCATION AND HEIGHT OF PRECAST RETAINING/NOISE WALL.
3. PROVIDE MINIMUM SPECIFIED NOISE WALL HEIGHT THROUGHOUT ENTIRE WALL LENGTH, EXCLUDING END TREATMENT.
4. ALL PANELS ARE:

	RETAINING PANEL	TRANSITION PANEL
HEIGHT:	7 FT MAX (1 FT INCREMENTS)	11 FT MAX (1 FT INCREMENTS)
LENGTH:	11 FT 5 INCHES LONG	11 FT 5 INCHES LONG
THICKNESS:	6 INCHES	7 INCHES

5. SEE STD DWG SW 4B FOR SECTION C-C AND RETAINING PANEL DETAILS. SEE STD DWG SW 4C FOR SECTION D-D.
6. MAXIMUM HEIGHT OF RETAINING/NOISE WALL IS 19 FT.
7. SEE STD DWG SW 3A FOR NOISE PANEL DETAILS.
8. CHANGE ELEVATION AT TOP OF RETAINING/NOISE WALL WITH STEPPED NOISE PANEL AS SHOWN ON THIS SHEET.
9. BEGIN AND END RETAINING/NOISE WALL WITH END TREATMENT SPECIFIED IN THE CONTRACT DOCUMENTS. TYPE I END TREATMENT SHOWN ON SHEET SW 3A.
10. EVENLY SPACE PILASTER POSTS AT 200 FT MAXIMUM INTERVALS WHEN REQUIRED. SEE STD DWG SW 5 FOR PRECAST PILASTER POST DETAILS. SEE CONTRACT DOCUMENTS FOR EXACT LOCATIONS.
11. FORM A TEXTURED SURFACE FINISH ON EXPOSED SIDE OF RETAINING PANEL. SEE CONTRACT DOCUMENTS FOR PRESCRIBED TEXTURED SURFACE FINISH.
12. NOISE PANEL AND RETAINING PANEL MAY BE COMBINED. SEE STD DWG SW 4B FOR DETAILS.

REVISIONS

NO.	DATE	APPR.	REMARKS

UTAH DEPARTMENT OF TRANSPORTATION
STANDARD DRAWINGS FOR ROAD AND BRIDGE CONSTRUCTION
SALT LAKE CITY, UTAH

RECOMMENDED FOR APPROVAL — JAN.01, 2017 — DATE
CHAIRMAN: STANDARDS COMMITTEE APPROVED — JAN.01, 2017 — DATE
DEPUTY DIRECTOR

PRECAST CONCRETE RETAINING/NOISE WALL 1 OF 3

STANDARD DRAWING TITLE

STD. DWG. NO.
SW 4A

DGN File: L:\Standard Drawings\Imperial\2017 Approved\1-All Drawings\SW04A.dgn
28-NOV-2016

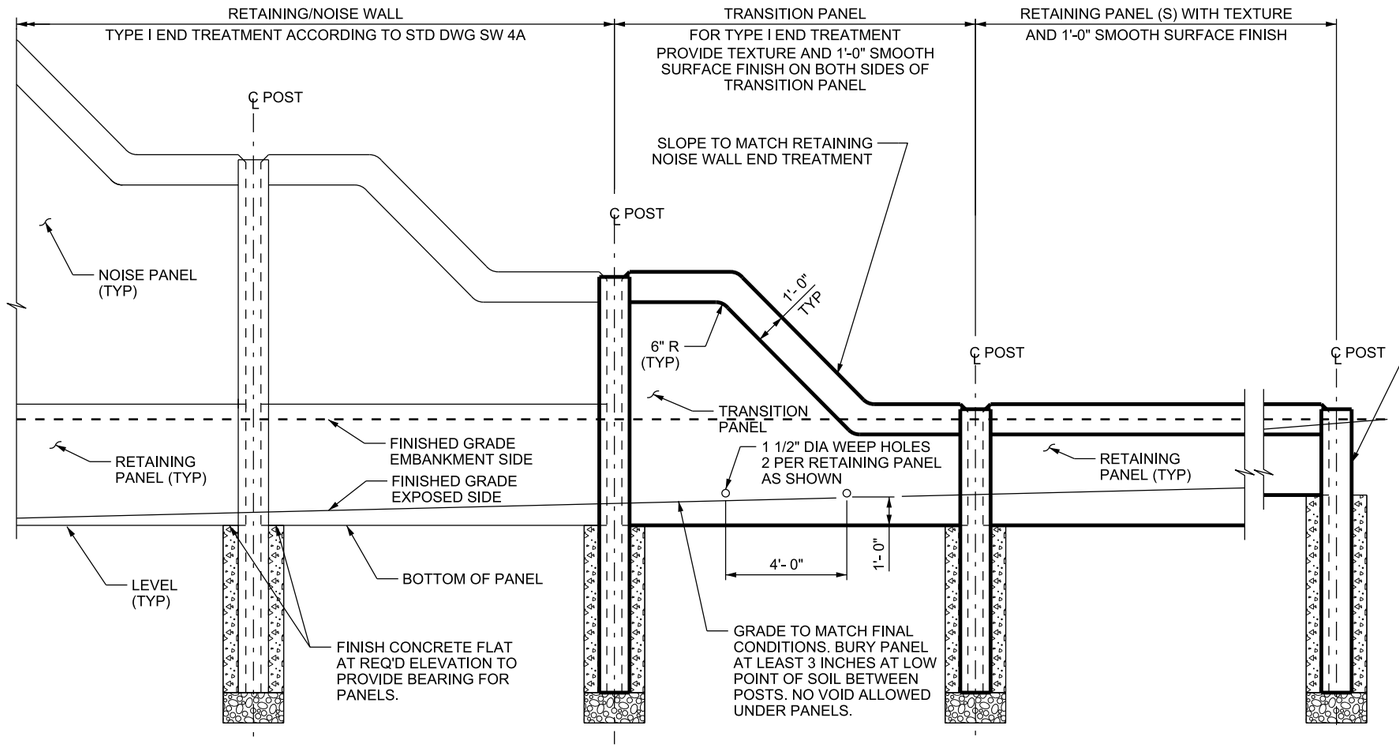

TYPICAL ELEVATION

TRANSITION TO RETAINING ONLY WALL

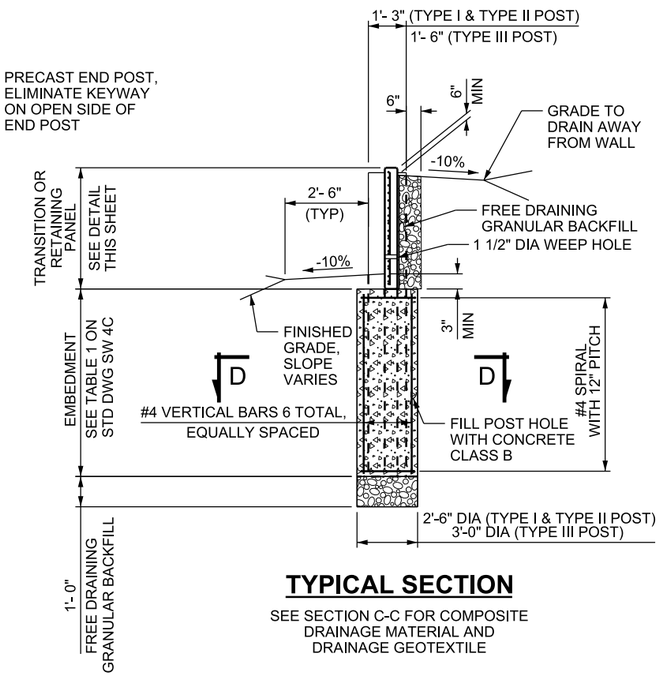

TYPICAL SECTION

SEE SECTION C-C FOR COMPOSITE DRAINAGE MATERIAL AND DRAINAGE GEOTEXTILE

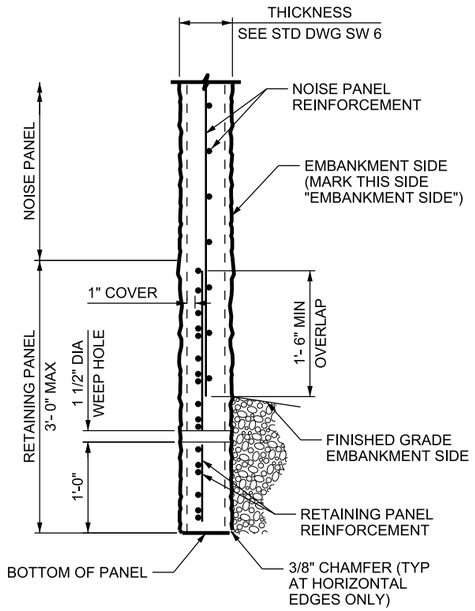

COMBINED NOISE/RETAINING PANEL SECTION

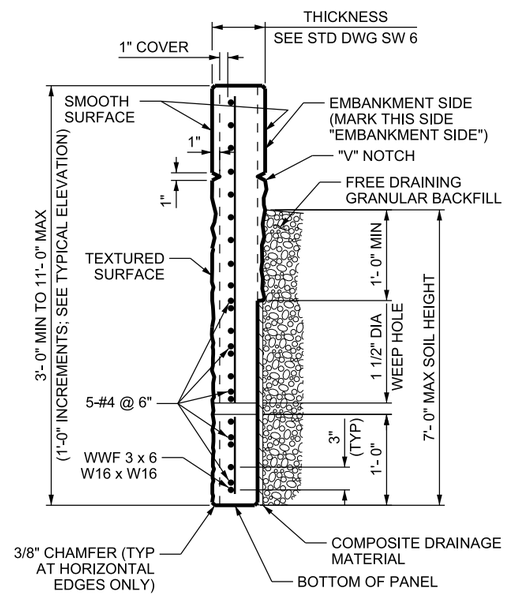

TRANSITION PANEL SECTION

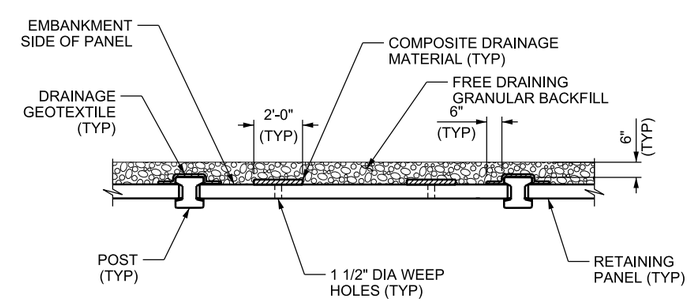

NOTE: PLACE FREE DRAINING GRANULAR BACKFILL, COMPOSITE DRAINAGE MATERIAL, AND DRAINAGE GEOTEXTILE FROM THE TOP OF FINISHED GRADE TO THE BOTTOM OF RETAINING PANEL.

SECTION C-C

SEE STD DWG SW 4A FOR LOCATION

REVISIONS

NO.	DATE	APPR.	REMARKS

UTAH DEPARTMENT OF TRANSPORTATION
STANDARD DRAWINGS FOR ROAD AND BRIDGE CONSTRUCTION
SALT LAKE CITY, UTAH

RECOMMENDED FOR APPROVAL — DEPUTY DIRECTOR — DATE JAN.01, 2017
CHAIRMAN STANDARDS COMMITTEE APPROVED — DATE JAN.01, 2017

PRECAST CONCRETE RETAINING/NOISE WALL 2 OF 3

STANDARD DRAWING TITLE

STD. DWG. NO.
SW 4B

DGN File: L:\Standard Drawings\Imperial\2017 Approved\1-All Drawings\SW04B.dgn
28-NOV-2016

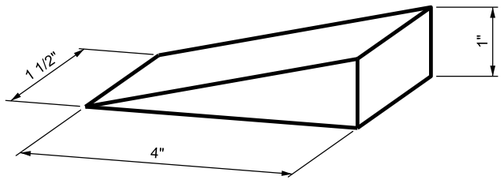

WOOD SHIM DETAIL

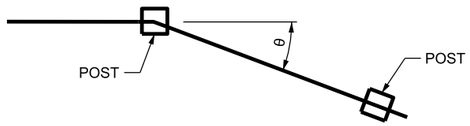

θ DETAIL

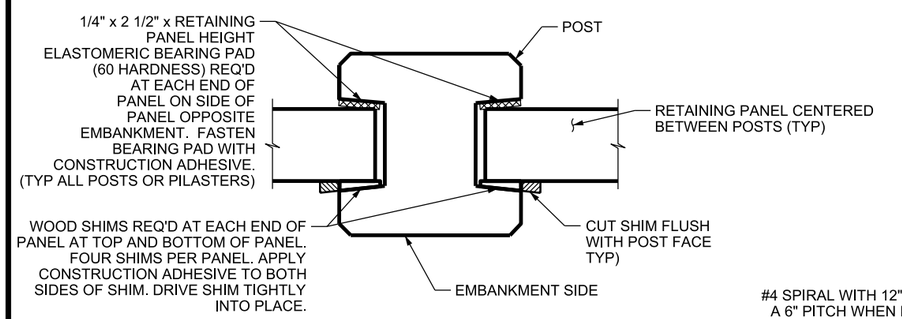

POST & RETAINING PANEL DETAIL

TYPE I POST SHOWN
TYPE II POST, TYPE III POST, AND PILASTER SIMILAR

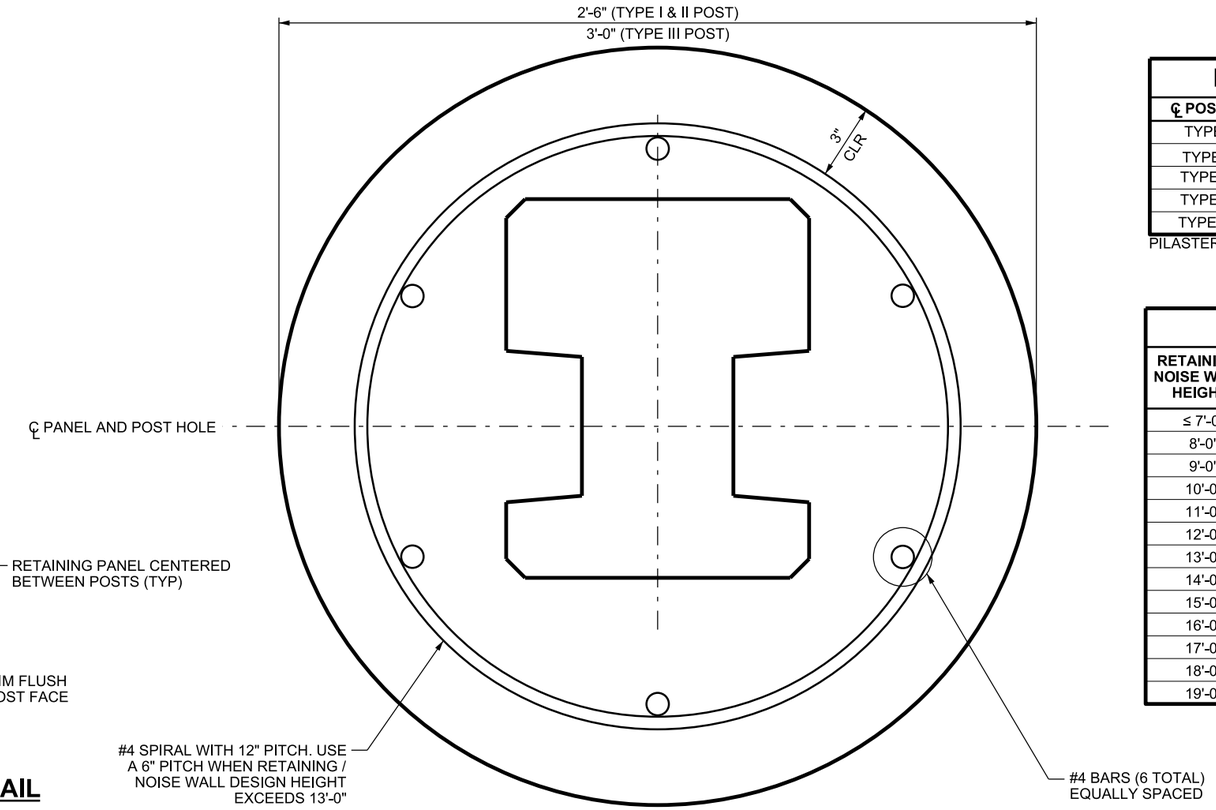

SECTION D-D

SEE STD DWG SW 4A AND SW 4B FOR LOCATION;
TYPE I POST SHOWN. TYPE II POST, TYPE III POSTS,
AND PILASTER SIMILAR

POST SPACING

℄ POST TO ℄ POST	REQ'D SPACING
TYPE I TO TYPE I	12'-0"
TYPE I TO TYPE II	12'-2"
TYPE I TO TYPE III	12'-3"
TYPE II TO TYPE II	12'-4"
TYPE II TO TYPE III	12'-5"

PILASTER POST IS TYPE I

TABLE 1

RETAINING/ NOISE WALL HEIGHT	POST	
	VERTICAL BAR SIZE	EMBEDMENT
≤ 7'-0"	#7	9'-0"
8'-0"	#7	9'-3"
9'-0"	#7	9'-6"
10'-0"	#7	9'-8"
11'-0"	#7	9'-11"
12'-0"	#7	10'-0"
13'-0"	#7	10'-3"
14'-0"	#8	10'-6"
15'-0"	#8	10'-8"
16'-0"	#8	10'-10"
17'-0"	#9	11'-0"
18'-0"	#9	11'-2"
19'-0"	#9	11'-4"

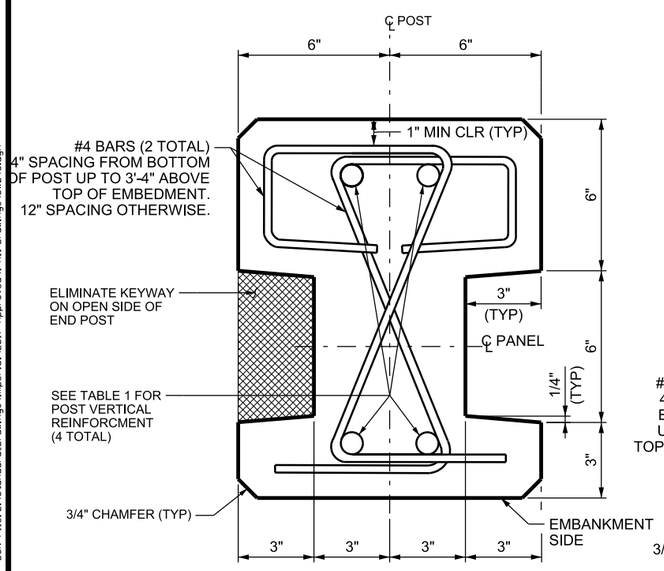

SECTION THROUGH TYPE I POST

θ = 0° TO 10°

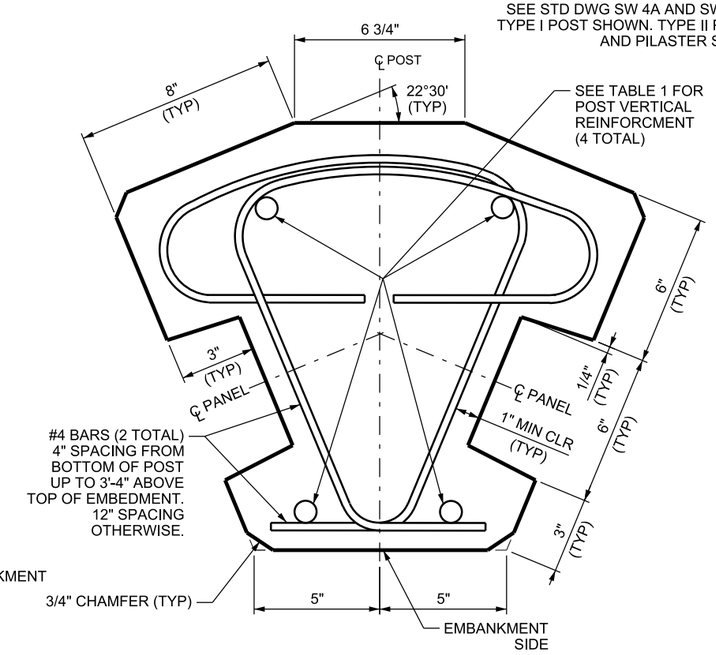

SECTION THROUGH TYPE II POST

θ = 35° TO 55°

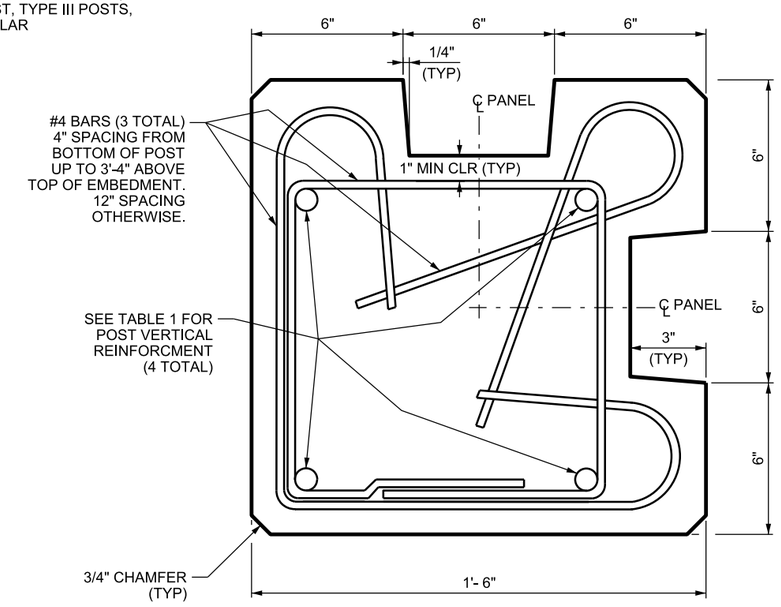

SECTION THROUGH TYPE III POST

θ = 80° TO 100°

REVISIONS

NO.	DATE	APPR.	REMARKS

UTAH DEPARTMENT OF TRANSPORTATION
STANDARD DRAWINGS FOR ROAD AND BRIDGE CONSTRUCTION
SALT LAKE CITY, UTAH

RECOMMENDED FOR APPROVAL — JAN.01.2017 DATE
CHAIRMAN STANDARDS COMMITTEE — JAN.01.2017 DATE
APPROVED
DEPUTY DIRECTOR

PRECAST CONCRETE RETAINING/NOISE WALL 3 OF 3

STANDARD DRAWING TITLE

STD. DWG. NO.
SW 4C

DGN File: L:\Standard_Drawings\Imperial\2017 Approved\1-All Drawings\SW04C.dgn
28-NOV-2016

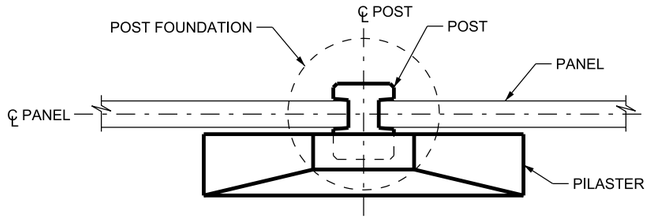

PLAN

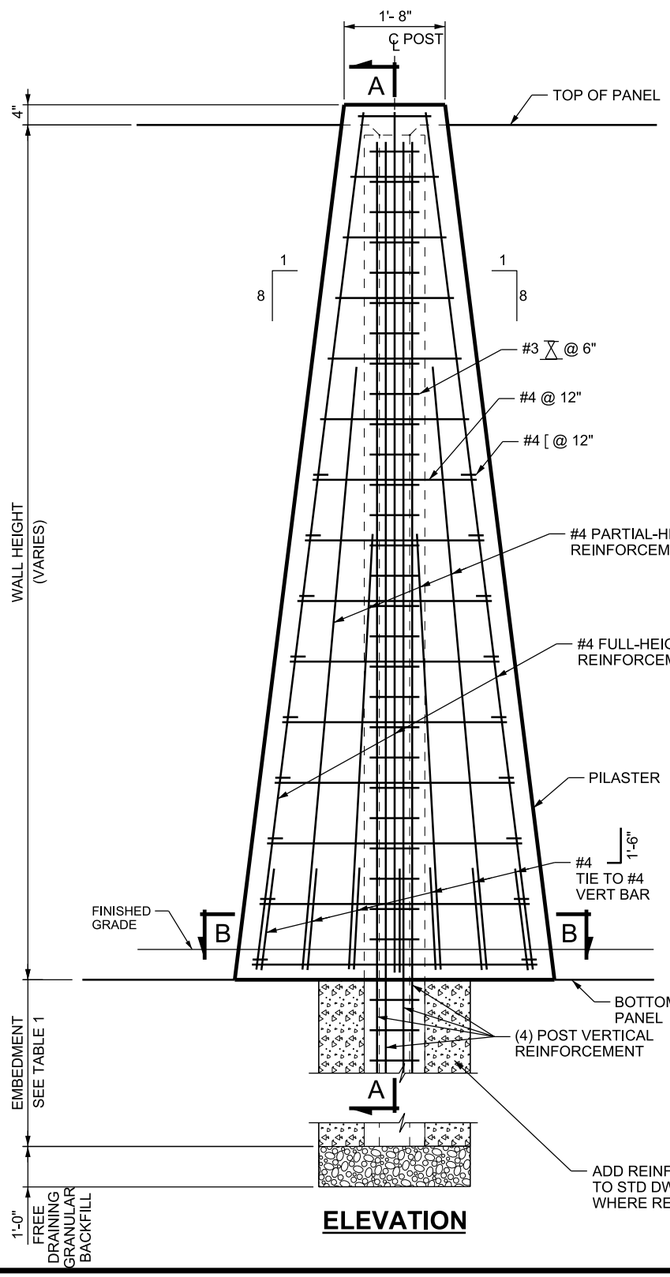

ELEVATION

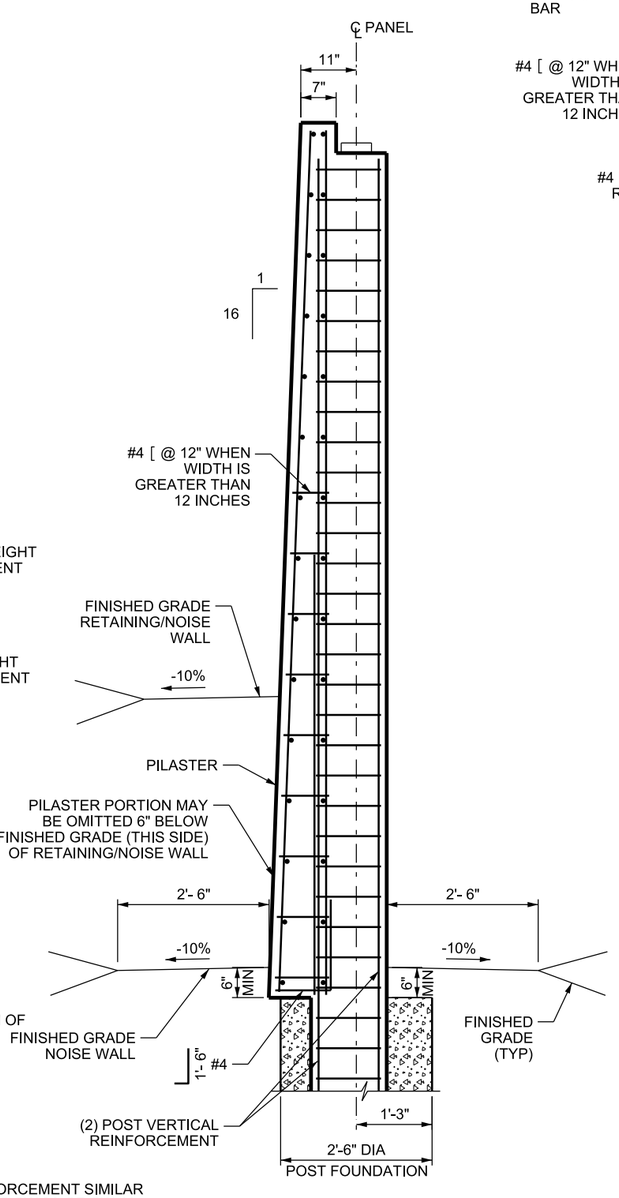

SECTION A-A

RETAINED SOIL SHOWN ON PILASTER SIDE OF POST.
SOIL MAY ALSO BE RETAINED ON OPPOSITE SIDE OF POST.

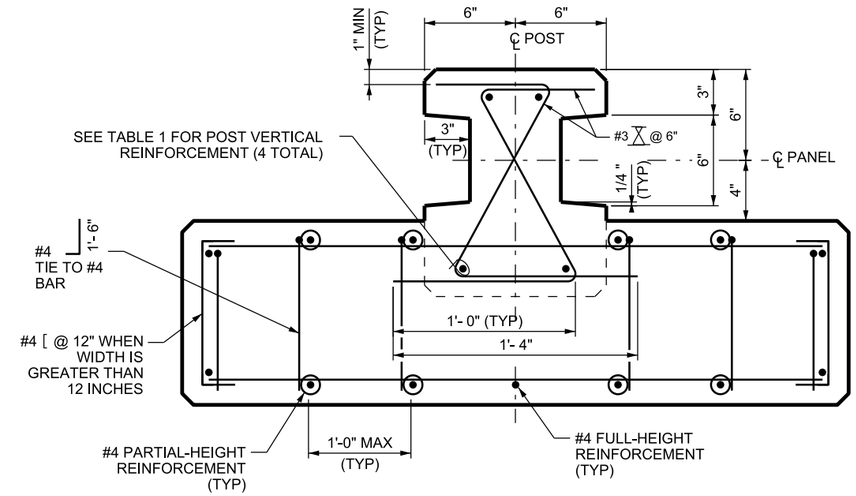

SECTION B-B

TABLE 1 - NOISE WALL		
WALL HEIGHT	POST	
	VERTICAL BAR SIZE	EMBEDMENT
≤ 6'-0"	#5	5'-6"
7'-0"	#5	6'-4"
8'-0"	#5	7'-3"
9'-0"	#5	8'-2"
10'-0"	#7	9'-0"
11'-0"	#7	9'-11"
12'-0"	#8	10'-10"
13'-0"	#8	11'-9"
14'-0"	#8	12'-8"
15'-0"	#10	13'-6"
16'-0"	#10	14'-5"
17'-0"	#10	15'-4"

TABLE 1 - RETAINING/ NOISE WALL		
WALL HEIGHT	POST	
	VERTICAL BAR SIZE	EMBEDMENT
≤ 7'-0"	#7	9'-0"
8'-0"	#7	9'-3"
9'-0"	#7	9'-6"
10'-0"	#7	9'-8"
11'-0"	#7	9'-11"
12'-0"	#8	10'-10"
13'-0"	#8	11'-9"
14'-0"	#8	12'-8"
15'-0"	#10	13'-6"
16'-0"	#10	14'-5"
17'-0"	#10	15'-4"
18'-0"	#11	16'-3"
19'-0"	#11	17'-2"

DESIGN DATA

AASHTO LRFD BRIDGE DESIGN SPECIFICATIONS

PRECAST PANELS & POSTS: CONCRETE CLASS AA(AE) f'c = 5,000 psi;
fy (REINF) = 60,000 psi; n=8

POST HOLES: CONCRETE CLASS B f'c = 2,500 psi
fy (REINF) = 60,000 psi; n=10

NOTES

1. CHAMFER ALL EXPOSED CONCRETE CORNERS 3/4 INCH EXCEPT WHERE SPECIFIED OTHERWISE.
2. PROVIDE 2 INCH CONCRETE COVER TO REINFORCING STEEL EXCEPT WHERE SPECIFIED OTHERWISE.
3. ALL EXPOSED SURFACES TO HAVE A SMOOTH SURFACE FINISH.
4. DO NOT PLACE PILASTERS ON WALLS GREATER THAN 19 FT HIGH.
5. EVENLY SPACE PILASTER POSTS AT 200 FT MAXIMUM INTERVALS. SEE CONTRACT DOCUMENTS FOR EXACT LOCATIONS.
6. PLACE PILASTER ON HIGHWAY SIDE OF NOISE WALLS.
7. PLACE PILASTER ON HIGHWAY SIDE OF RETAINING/NOISE WALLS.
8. PLACE 1 FT WIDE DRAINAGE GEOTEXTILE ALONG JOINT BETWEEN PILASTER AND PANEL (2 LOCATIONS PER PILASTER) FROM THE TOP OF FINISHED GRADE TO THE BOTTOM OF RETAINING PANEL WHEN PILASTER IS ON EMBANKMENT SIDE OF RETAINING/NOISE WALLS. WRAP FREE DRAINING GRANULAR BACKFILL AROUND PILASTER.

REVISIONS

NO.	DATE	APPR.	REMARKS

UTAH DEPARTMENT OF TRANSPORTATION
STANDARD DRAWINGS FOR ROAD AND BRIDGE CONSTRUCTION
SALT LAKE CITY, UTAH

RECOMMENDED FOR APPROVAL — JAN.01.2017 DATE
CHAIRMAN STANDARDS COMMITTEE APPROVED — JAN.01.2017 DATE
DEPUTY DIRECTOR

STANDARD DRAWING TITLE
PRECAST PILASTER POST

STD. DWG. NO.
SW 5

DGN File: L:\Standard Drawings\Imperial\2017 Approved\1-All Drawings\SW05.dgn
28-NOV-2016

ASHLAR STONE

EXPOSED AGGREGATE

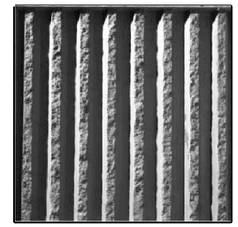

FRACTURED FIN

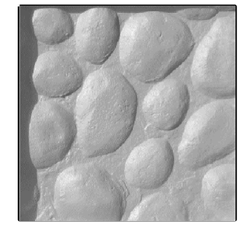

RIVER ROCK

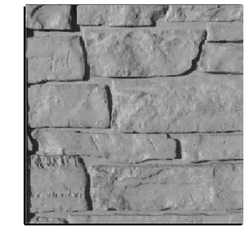

STACKED STONE

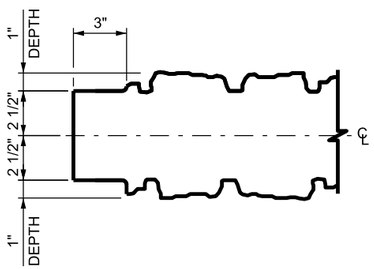

SECTION A-A

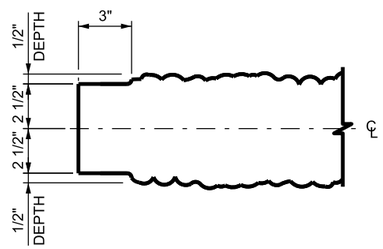

SECTION A-A

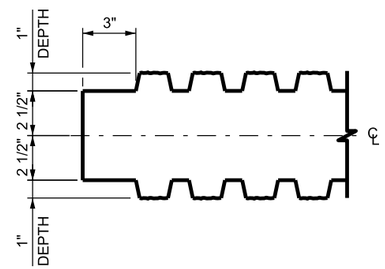

SECTION A-A

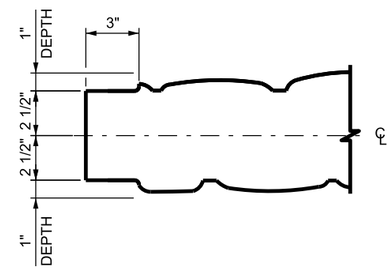

SECTION A-A

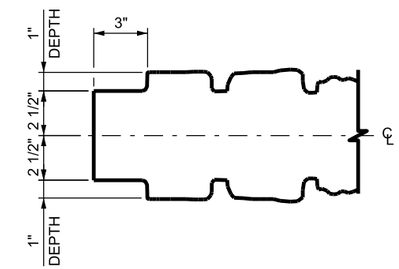

SECTION A-A

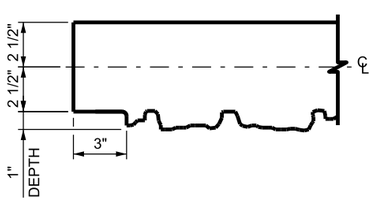

SECTION B-B

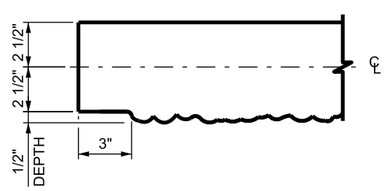

SECTION B-B

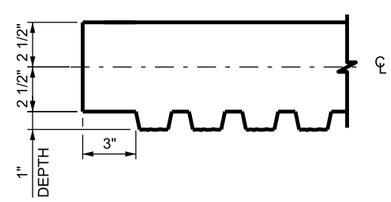

SECTION B-B

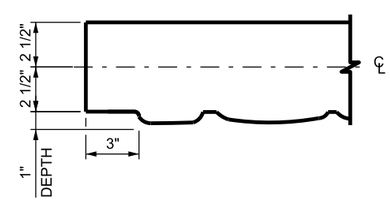

SECTION B-B

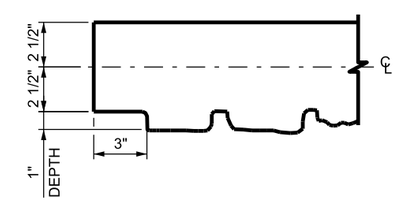

SECTION B-B

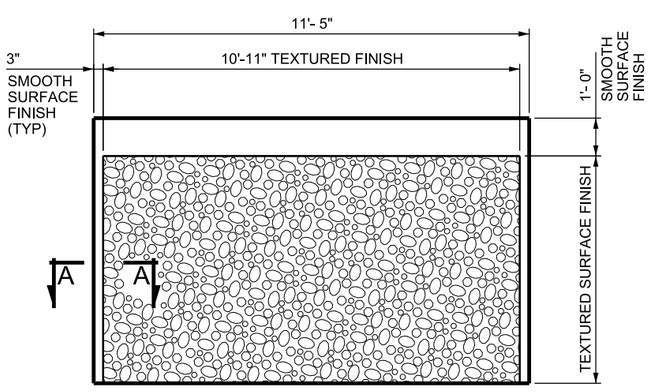

TYPICAL NOISE PANEL

BOTH FACES SIMILAR

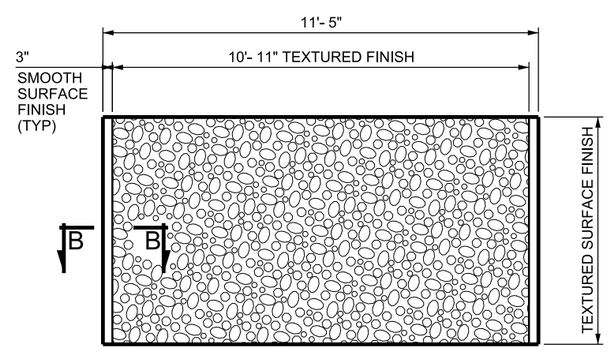

TYPICAL RETAINING PANEL

EMBANKMENT SIDE FACE SMOOTH SURFACE FINISH

NOTES

1. SEE STD DWG SW 3A FOR ADDITIONAL NOISE PANEL DETAILS.
2. SEE STD DWG SW 4A AND SW 4B FOR ADDITIONAL RETAINING PANEL DETAILS.
3. FORM TEXTURED SURFACE FINISH USING FORM LINERS.
4. PROVIDE A TEXTURED SURFACE FINISH ON BOTH SIDES OF NOISE PANELS.
5. PROVIDE A SMOOTH SURFACE FINISH ON THE EMBANKMENT SIDE AND A TEXTURED SURFACE FINISH ON THE EXPOSED SIDE OF RETAINING PANELS.
6. USE THE EXPOSED AGGREGATE OPTION TO MATCH AN EXISTING EXPOSED AGGREGATE NOISE WALL.
7. SUBMIT FOR APPROVAL SAMPLES OF THE TEXTURED SURFACE FINISHES SPECIFIED IN THE CONTRACT DOCUMENTS PRIOR TO CASTING THE PANELS.

REVISIONS

NO.	DATE	APPR.	REMARKS

UTAH DEPARTMENT OF TRANSPORTATION
STANDARD DRAWINGS FOR ROAD AND BRIDGE CONSTRUCTION
SALT LAKE CITY, UTAH

RECOMMENDED FOR APPROVAL — JAN.01.2017 DATE
CHAIRMAN STANDARDS COMMITTEE APPROVED — JAN.01.2017 DATE
DEPUTY DIRECTOR

STANDARD DRAWING TITLE
PRECAST CONCRETE PANEL SURFACE TEXTURE OPTIONS

STD. DWG. NO.
SW 6

DGN File: L:\Standard Drawings\Imperial\2017 Approved\1-All Drawings\SW06.dgn
28-NOV-2016

GENERAL NOTES (APPLIES TO ALL TC SERIES STANDARD DRAWINGS):

1. USE UDOT STANDARDS FOR TRAFFIC CONTROL. USE THE UTAH MANUAL ON UNIFORM TRAFFIC CONTROL DEVICES FOR TRAFFIC CONTROL ELEMENTS NOT SHOWN IN THE TC SERIES STD DWGS.
2. USE STANDARD HIGHWAY SIGNS & MARKING BOOK FOR SIZE AND DESIGN OF STANDARD SIGNS.
3. SEE STD DWG TC 2A AND TC 2B FOR WORK ZONE SIGNING AND DEVICE REQUIREMENTS.
4. USE MINIMUM SIGN SIZE OF 48 x 48 INCHES FOR DIAMOND WORK ZONE WARNING SIGNS.
5. COVER OR REMOVE NON-APPLICABLE SIGNING, BOTH EXISTING AND WORK ZONE SIGNS.
6. REMOVE NON-APPLICABLE PAVEMENT MARKINGS FOR OPERATIONS LONGER THAN 3 DAYS.
7. REMOVE OR RELOCATE NON-APPLICABLE PORTABLE SIGN SUPPORTS AND SIGNS BEYOND TWICE THE WORK CLEAR ZONE (WCZ) DISTANCE, SEE STD DWG TC 3A, TABLE 1.
8. REFER TO STANDARD SPECIFICATION 01554 FOR FLAGGING REQUIREMENTS AT OPERATING TRAFFIC SIGNALS.
9. PRE-CONSTRUCTION POSTED SPEED LIMIT: THE PERMANENT POSTED SPEED LIMIT PRIOR TO COMMENCEMENT OF CONSTRUCTION ACTIVITIES.
10. USE LANE WIDTH RESTRICTIONS OF LESS THAN 12 FT ONLY WHEN APPROVED BY THE ENGINEER WITH THE FOLLOWING MINIMUMS:
    A. PRE-CONSTRUCTION POSTED SPEED LIMIT LESS THAN 55 MPH, MINIMUM LANE WIDTH 10 FT.
    B. PRE-CONSTRUCTION POSTED SPEED LIMIT OF 55 MPH OR GREATER, MINIMUM LANE WIDTH 11 FT.
11. CLEAN AND RESTORE PAVEMENT MARKINGS, BOTH ON AND OFF THE PROJECT, THAT ARE OBSCURED BY WORK OPERATIONS AT THE END OF EACH DAY'S OPERATION.
12. OBTAIN APPROVAL FOR REGULATORY AND ADVISORY SPEED REDUCTIONS THROUGH THE ENGINEER. USE SPEED REDUCTIONS ONLY DURING IMPACTED TIMES AND AREAS.
13. RESTORE PRE-CONSTRUCTION POSTED SPEED LIMITS DURING TIMES AND IN LOCATIONS WHERE TRAFFIC IS NOT BEING IMPACTED BY WORK ACTIVITIES. SEE POLICY 06C-61.
14. USE AN ADDITIONAL W3-5 SETUP TO STEP DOWN THE SPEED IF MORE THAN A 20 MPH DROP IS REQUIRED.
15. USE THE PRE-CONSTRUCTION POSTED SPEED LIMIT PRIOR TO WORK ZONE TO COMPUTE THE SIGN SPACING, TAPER LENGTH, BUFFER ZONE, AND WORK CLEAR ZONE DISTANCES. USE THE WORK ZONE POSTED SPEED LIMIT TO DETERMINE THE TANGENT SPACING FOR CHANNELIZING DEVICES.
16. DO NOT USE TUBULAR MARKERS AS LANE CLOSURE TAPER DEVICES. USE DRUMS OR DIRECTION INDICATOR BARRICADES AS LANE CLOSURE TAPER DEVICES FOR SPEEDS 50 MPH AND GREATER.
17. USE A DOWNSTREAM TAPER FOR OPERATIONS LONGER THAN 3 DAYS.
18. ARROW BOARD PLACEMENT:
    A. PLACE ARROW BOARD ON THE SHOULDER OF THE ROADWAY OR, IF PRACTICAL, FURTHER FROM THE TRAVELED LANE. PLACE ARROW BOARD IN FIRST 1/3 OF TAPER IN THE CLOSED LANE WHEN NO ADEQUATE SHOULDER IS AVAILABLE. DELINEATE WITH RETROREFLECTIVE DEVICES.
    B. REMOVE ARROW BOARD WHEN NOT BEING USED OR SHIELDED BEHIND A TRAFFIC BARRIER AND TURNED AWAY FROM TRAFFIC. DELINEATE WITH RETRORELECTIVE DEVICES IF THE PREVIOUS TWO OPTIONS ARE NOT FEASIBLE.
    C. VERIFY THAT SIGN FACE IS ORIENTED TO FACE ONCOMING TRAFFIC.
19. USE AN APPROVED WORK ZONE CRASH CUSHION OR END TREATMENT SYSTEM WITH TEMPORARY PRECAST CONCRETE BARRIER WHEN APPROACH ENDS ARE WITHIN THE AASHTO CLEAR ZONE. USE APPROVED TRUCK MOUNTED ATTENUATOR SYSTEM FOR ONLY 72 HOURS OR LESS.
20. USE PROPER LENGTH OF NEED FOR TEMPORARY BARRIER AS PER THE REQUIREMENTS OF THE ROADSIDE DESIGN GUIDE. USE PRE-CONSTRUCTION POSTED SPEED LIMIT PRIOR TO THE WORK ZONE FOR THE DESIGN OF THE REQUIRED LENGTH OF NEED. SEE STD DWG TC 3A FOR THE WORK ZONE FLARE RATE REQUIREMENT FOR TEMPORARY BARRIER. APPROVAL FROM THE ENGINEER IS REQUIRED FOR MODIFICATION TO THE REQUIRED FLARE RATE.
21. USE STEEL PLATE AHEAD SIGN (W8-24) IN ADVANCE OF PLATE WHEN STEEL PLATES ARE PLACED ON THE ROADWAY. PLACE BUMP SIGN (W8-1) WITH A DIAGONAL DOWNWARD POINTING ARROW (W16-7P) PLAQUE ADJACENT TO THE STEEL PLATE.
22. USE IDENTICAL LEGEND SUPPLEMENTAL LEFT SIDE SIGNING FOR HIGH-SPEED DIVIDED HIGHWAYS.
23. MAINTAIN PEDESTRIAN TRAFFIC AT EXISTING CROSSWALKS AND ON EXISTING SIDEWALKS. REROUTE ACCORDING TO STD DWG TC 6 WHEN PEDESTRIAN TRAFFIC CANNOT BE MAINTAINED.
24. DO NOT USE AUTOMATED FLAGGER ASSISTANCE DEVICES (AFADs).
25. DO NOT USE PROMOTIONAL OR OTHER INFORMATIONAL IDENTIFICATIONS OF PUBLIC OFFICIALS, CONTRACTORS, ORGANIZATIONAL AFFILIATIONS, RELATED LOGOS AND SYMBOLS ON TRAFFIC CONTROL DEVICES. MARKINGS TO SHOW OWNERSHIP ON NON-REFLECTIVE SURFACES ARE ACCEPTABLE.
26. MEET STANDARD SPECIFICATION 01554 FOR CRASH WORTHINESS OF DEVICES.
27. REMOVE OR COVER ALL WORK ZONE REDUCED SPEED LIMIT ASSEMBLIES (RS2-1a) AND THE WORK ZONE REDUCED SPEED LIMIT AHEAD (W3-5 SERIES) SIGNS WHEN NO ONE IS WORKING, EXCEPT AS APPROVED BY THE ENGINEER. DO NOT COVER THE SPEED LIMIT ASSEMBLIES (RS2-1a) IF THE ASSEMBLIES ARE THE PRE-CONSTRUCTION POSTED SPEED LIMIT.
28. PROVIDE THE DISTANCE 2L BETWEEN EACH MANEUVER FOR MULTIPLE LANE DROPS, SHIFTS OR BOTH.

REVISIONS

NO.	DATE	APPR.	REMARKS

UTAH DEPARTMENT OF TRANSPORTATION
STANDARD DRAWINGS FOR ROAD AND BRIDGE CONSTRUCTION
SALT LAKE CITY, UTAH

RECOMMENDED FOR APPROVAL — JAN. 01, 2017 DATE
CHAIRMAN STANDARDS COMMITTEE APPROVED — JAN. 01, 2017 DATE
DEPUTY DIRECTOR

TRAFFIC CONTROL DRAWING SERIES GENERAL NOTES

STANDARD DRAWING TITLE

STD. DWG. NO.
TC 1

28-NOV-2016 DGN File:L:\Standard.Drawings\Imperial\2017 Approved\1-All Drawings\TC01.dgn

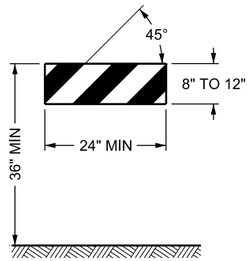

TYPE I BARRICADE

SEE NOTES 1, 2, & 6

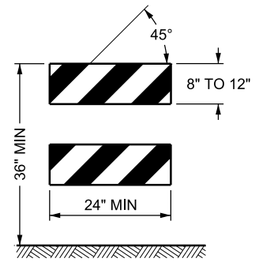

TYPE 2 BARRICADE

SEE NOTES 1, 2, & 6

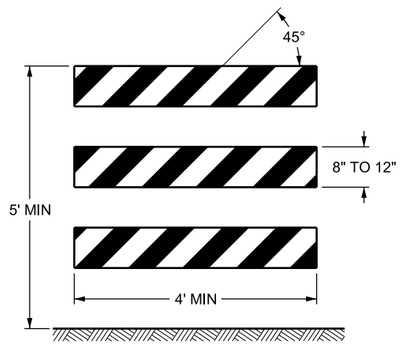

TYPE 3 BARRICADE

SEE NOTES 1, 2, & 6

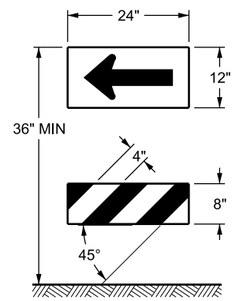

DIRECTION INDICATOR BARRICADE

SEE NOTES 1, 2, 6, & 7

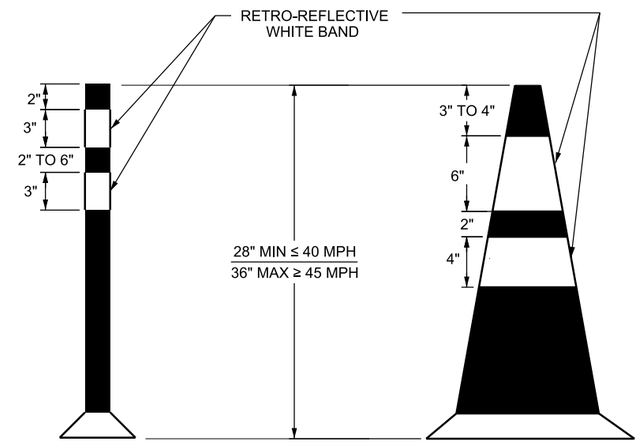

TUBULAR MARKER

SEE NOTE 4

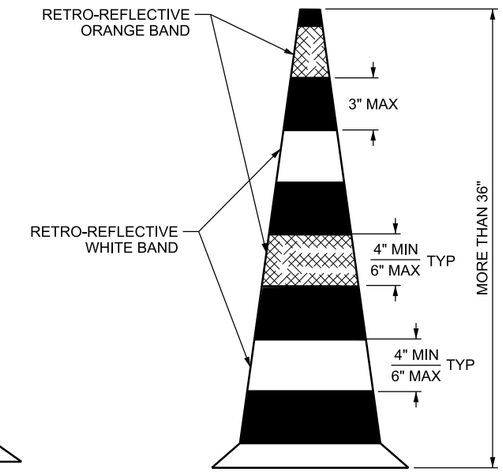

CONES

NOTES 8, 9,10,11 & 12

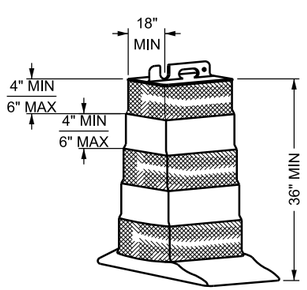

ONE-PIECE RECTANGULAR
W/RETROREFLECTIVE BANDS

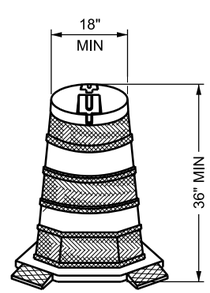

TWO-PIECE ROUND
W/RETROREFLECTIVE BANDS

DRUMS

SEE NOTES 3 & 10

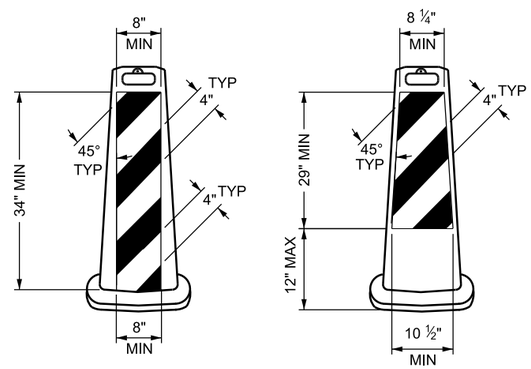

VERTICAL PANEL

SEE NOTES 1 & 5

NOTES:

1. USE A MINIMUM OF 270 SQUARE INCHES OF RETROREFLECTIVE MATERIAL PLACED ON BARRICADES AND VERTICAL PANELS WHEN USED ON FREEWAYS OR ROADWAYS WITH A POSTED SPEED GREATER THAN 45 MPH. PLACE BARRICADES AND VERTICAL PANELS IN SUCH A MANNER THAT THEY ARE VISIBLE TO APPROACHING TRAFFIC.
2. USE SANDBAGS WITH SAND OR OTHER COMPARABLE SOFT MATERIAL AS BALLAST. DO NOT PLACE BALLAST HIGHER THAN 12 INCHES ABOVE THE ROADWAY AND DO NOT COVER ANY RETROREFLECTIVE AREA OF RAILS OR SIGNS.
3. USE DRUMS OR DIRECTIONAL BARRICADES AS LANE CLOSURE TAPER DEVICES FOR SPEEDS 50 MPH AND GREATER.
4. USE TUBULAR MARKERS FOR DAY-TIME USE ONLY. DO NOT USE TUBULAR MARKERS AS A LANE CLOSURE TAPER DEVICE.
5. USE 6 INCH STRIPE WIDTH WHERE THE HEIGHT OF THE RETROREFLECTIVE MATERIAL ON VERTICAL PANEL IS 36 INCHES OR MORE.
6. USE 6 INCH STRIPE WIDTH. A 4 INCH STRIPE WIDTH MAY BE USED WHEN RAIL LENGTH IS LESS THAN 36 INCHES.
7. USE A DIRECTION INDICATOR BARRICADE WITH A ONE-DIRECTION LARGE ARROW (W1-6) SIGN MOUNTED ABOVE A DIAGONAL STRIPED, HORIZONTALLY ALIGNED, RETROREFLECTIVE RAIL.
8. USE RETROREFLECTORIZED CONES FOR MAXIMUM VISIBILITY.
9. PROVIDE RETROREFLECTORIZATION OF CONES THAT ARE 28 TO 36 INCHES HIGH BY USING A 6 INCH WIDE WHITE BAND LOCATED 3 TO 4 INCHES FROM THE TOP OF THE CONE AND AN ADDITIONAL 4 INCH WIDE WHITE BAND LOCATED APPROXIMATELY 2 INCHES BELOW THE 6 INCH BAND.
10. PROVIDE RETROREFLECTORIZATION OF CONES THAT ARE MORE THAN 36 INCHES HIGH BY USING HORIZONTAL, CIRCUMFERENTIAL, ALTERNATING ORANGE AND WHITE RETROREFLECTIVE STRIPES THAT ARE 4 TO 6 INCHES WIDE. USE A MINIMUM OF TWO ORANGE AND TWO WHITE STRIPES FOR EACH CONE, WITH THE TOP STRIPE BEING ORANGE. DO NOT EXCEED 3 INCHES WIDE FOR ANY NON-RETROREFLECTIVE SPACES BETWEEN THE ORANGE AND WHITE STRIPES.
11. DO NOT USE CONES ON FREEWAYS, DIVIDED HIGHWAYS, OR ROADS WITH A SPEED OF 55 MPH OR GREATER. THIS RESTRICTION DOES NOT APPLY TO INCIDENT MANAGEMENT AND PAVEMENT MARKING OPERATIONS.
12. DO NOT USE CONES FOR LONG TERM STATIONARY OPERATIONS. REMOVE CONES FROM THE ROADWAY AT THE END OF EACH WORKDAY, WITH THE FOLLOWING EXCEPTION:

    CONES MAY BE USED FOR UP TO 3 DAYS AND 2 NIGHTS FOR OPERATIONS WHERE WORKERS ARE CONTINUALLY PRESENT AND WORK IS ACTIVELY UNDERWAY. REPLACE CONES WITH VERTICAL PANELS, DRUMS, AND BARRICADES WHEN WORKERS ARE NO LONGER PRESENT OR WHEN WORK EXTENDS THROUGH ADDITIONAL NIGHTS.
13. MAINTAIN AN ACCESSIBLE AND DETECTABLE PEDESTRIAN FACILITY ALONG THE ALTERNATE PEDESTRIAN ROUTE WHEN THE TEMPORARY TRAFFIC CONTROL ZONE AFFECTS EXISTING ACCESSIBLE AND DETECTABLE PEDESTRIAN FACILITIES. USE A CONTINUOUS DETECTABLE BOTTOM AND TOP SURFACE DETECTABLE BY LONG CANE USERS WHEN CHANNELIZATION DEVICES ARE USED TO CHANNELIZE PEDESTRIANS. THE BOTTOM OF THE BOTTOM SURFACE WILL BE NO HIGHER THAN 2 INCHES ABOVE THE GROUND. THE TOP OF THE TOP SURFACE WILL BE NO LOWER THAN 32 INCHES ABOVE THE GROUND.

REVISIONS

NO.	DATE	APPR.	REMARKS

UTAH DEPARTMENT OF TRANSPORTATION
STANDARD DRAWINGS FOR ROAD AND BRIDGE CONSTRUCTION
SALT LAKE CITY, UTAH

RECOMMENDED FOR APPROVAL — JAN.01.2017 DATE
CHAIRMAN STANDARDS COMMITTEE APPROVED — JAN.01.2017 DATE
DEPUTY DIRECTOR

WORK ZONE CHANNELIZATION DEVICES

STANDARD DRAWING TITLE

STD. DWG. NO.
TC 2A

DGN File:L:\Standard_Drawings\Imperial\2017 Approved\1-All Drawings\TC02A.dgn
28-NOV-2016

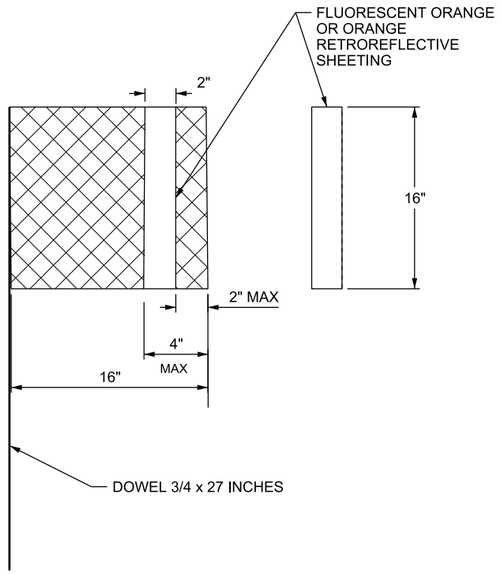

FLAG DETAIL

SEE NOTE 8

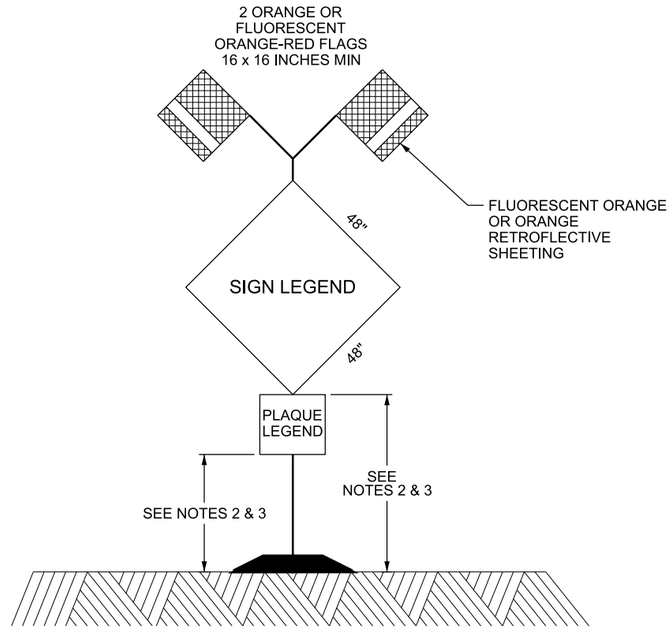

TYPICAL PORTABLE SIGN SUPPORTS INSTALLATION WITH FLAGS TRAFFIC SIDE DETAIL

SEE NOTES 4 & 6

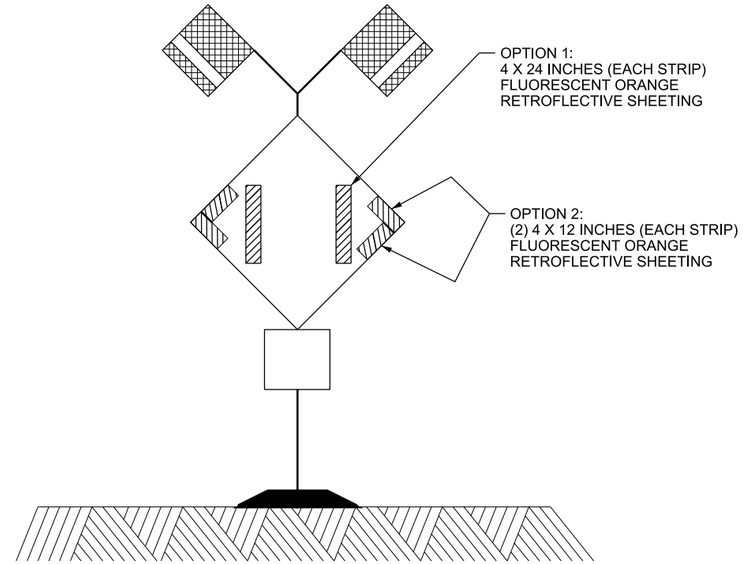

TYPICAL PORTABLE SIGN SUPPORTS INSTALLATION WITH FLAGS BACK SIDE DETAIL

SEE NOTE 5

SEE NOTES 1 & 6

NOTES:

1. CLOSE ROADWAYS WITH TYPE 3 BARRICADES. EXTEND THE BARRICADES ACROSS INTENDED ROAD CLOSURE A MINIMUM OF 3/4 OF THE ROADWAY STARTING FROM THE CENTER OF THE ROADWAY AND EXTENDING IN BOTH DIRECTIONS TOWARD THE SHOULDERS. PLACE A "ROAD CLOSED" SIGN (R11-2) OVER THE CENTER LINE AND THE APPROPRIATE "DETOUR" ARROW SIGNS (M4-10 L OR R) ON EACH SIDE OF THE "ROAD CLOSED" SIGN. DETOUR ARROWS ARE NOT REQUIRED IF DETOUR IS NOT AT ROAD CLOSURE.
2. USE A 12 INCH MINIMUM MOUNTING HEIGHT TO THE BOTTOM OF THE LOWEST SIGN FOR SIGNS ON PORTABLE SUPPORTS.
3. USE A 36 INCH MINIMUM MOUNTING HEIGHT TO THE BOTTOM OF THE LOWEST SIGN FOR SIGNS ON PORTABLE SUPPORTS PLACED AMONG CHANNELIZING DEVICES.
4. USE A MINIMUM 7 FT MOUNTING HEIGHT FOR ALL GROUND MOUNTED SIGNS. REFER TO SN SERIES STD DWGS.
5. PLACE TWO FLUORESCENT ORANGE STRIPS OF RETROREFLECTIVE SHEETING, 4 x 24 INCHES, WITHIN 12 INCHES FROM THE RIGHT AND LEFT EDGES ON THE BACK OF SIGNS USED WITH PORTABLE SUPPORTS.
6. USE SANDBAGS WITH SAND OR OTHER COMPARABLE SOFT MATERIAL AS BALLAST. DO NOT PLACE BALLAST HIGHER THAN 12 INCHES ABOVE THE ROADWAY AND DO NOT COVER ANY RETROREFLECTIVE AREA OF RAILS OR SIGNS.
7. USE SIGNS ON PORTABLE SUPPORTS FOR 7 DAYS OR LESS. USE PERMANENTLY MOUNTED SIGNS FOR LONGER THAN 7 DAYS UNLESS USE OF PORTABLE SIGN SUPPORTS RECEIVES APPROVAL FROM THE ENGINEER.
8. USE 2 x 16 INCHES FLUORESCENT ORANGE OR ORANGE RETROREFLECTIVE SHEETING SECURELY FASTENED WITHIN 4 INCHES FROM THE OUTSIDE EDGE OF FLAG. VERIFY THE SHEETING IS VISIBLE FROM EACH SIDE.

REVISIONS

NO.	DATE	APPR.	REMARKS

UTAH DEPARTMENT OF TRANSPORTATION
STANDARD DRAWINGS FOR ROAD AND BRIDGE CONSTRUCTION
SALT LAKE CITY, UTAH

RECOMMENDED FOR APPROVAL — JAN. 01, 2017 DATE
CHAIRMAN STANDARDS COMMITTEE APPROVED — JAN. 01, 2017 DATE
DEPUTY DIRECTOR

WORK ZONE SIGNING

STANDARD DRAWING TITLE

STD. DWG. NO.
TC 2B

DGN File:L:\Standard Drawings\Imperial\2017 Approved\1-All Drawings\TC02B.dgn
28-NOV-2016

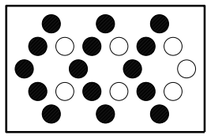

MERGE LEFT

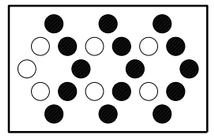

MERGE RIGHT

CHEVRON ARROW

SEE NOTE 2

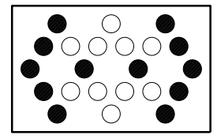

MERGE RIGHT OR LEFT

FLASHING DOUBLE ARROW

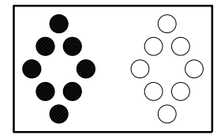

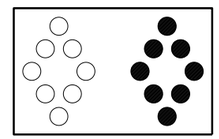

ALTERNATING DIAMOND

FLASHING CAUTION

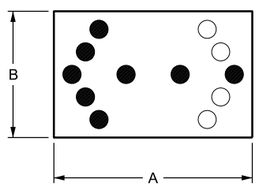

MERGE LEFT

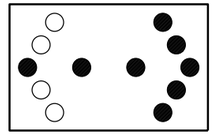

MERGE RIGHT

FLASHING ARROW

(OPTIONAL)
SEE NOTE 3

ARROW BOARD DIMENSIONS

	TYPE B	TYPE C
A	60 INCHES	96 INCHES
B	30 INCHES	48 INCHES

NOTES:

1. PLACE THE ARROW BOARD MOUNTING HEIGHT OF A MINIMUM OF 7 FT, MEASURED VERTICALLY FROM THE BOTTOM OF THE BOARD TO THE ROADWAY BELOW IT OR TO THE ELEVATION OF THE NEAR EDGE OF THE ROADWAY.
2. SEQUENTIAL ARROW MAY BE USED.
3. FLASHING ARROW MAY ONLY BE USED ON A 12 ELEMENT DISPLAY.
4. USE SHOULDER TAPER TO DELINEATE ARROW BOARD WHEN ON SHOULDER.
5. TYPE B - 4 INCH DIA SEALED - BEAM ELEMENT
   TYPE C - 5 INCH DIA SEALED - BEAM ELEMENT
6. DO NOT USE ARROW BOARDS TO INDICATE A LANE SHIFT.

REVISIONS

NO.	DATE	APPR.	REMARKS

UTAH DEPARTMENT OF TRANSPORTATION
STANDARD DRAWINGS FOR ROAD AND BRIDGE CONSTRUCTION
SALT LAKE CITY, UTAH

RECOMMENDED FOR APPROVAL — JAN.01, 2017 DATE
CHAIRMAN STANDARDS COMMITTEE APPROVED — JAN.01, 2017 DATE
DEPUTY DIRECTOR

WORK ZONE
ADVANCED WARNING
ARROW BOARDS

STANDARD DRAWING TITLE

STD. DWG. NO.
TC 2C

28-NOV-2016 DGN File: L:\Standard Drawings\Imperial\2017 Approved\1-All Drawings\TC02C.dgn

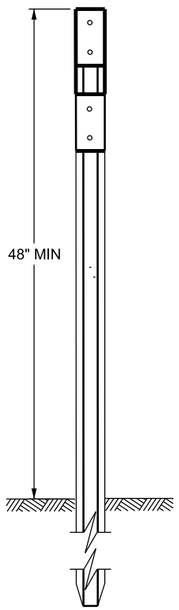

DELINEATOR

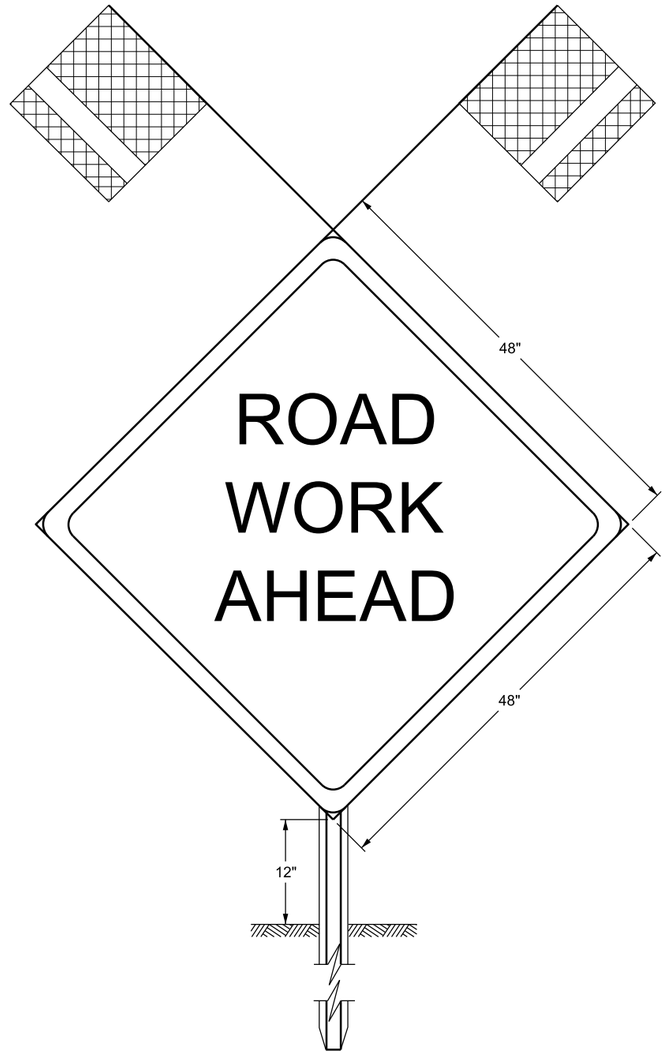

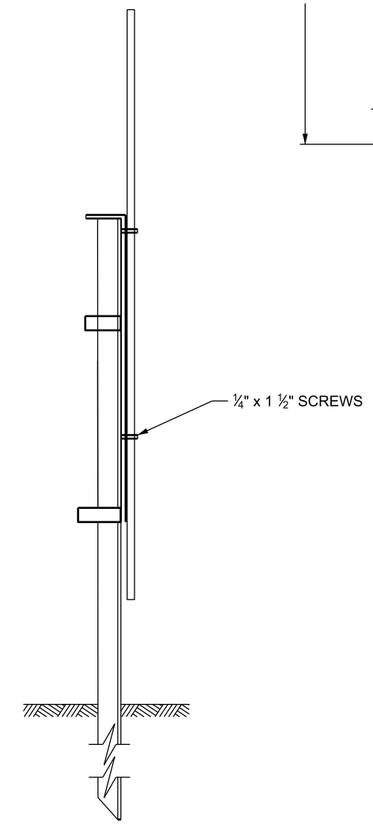

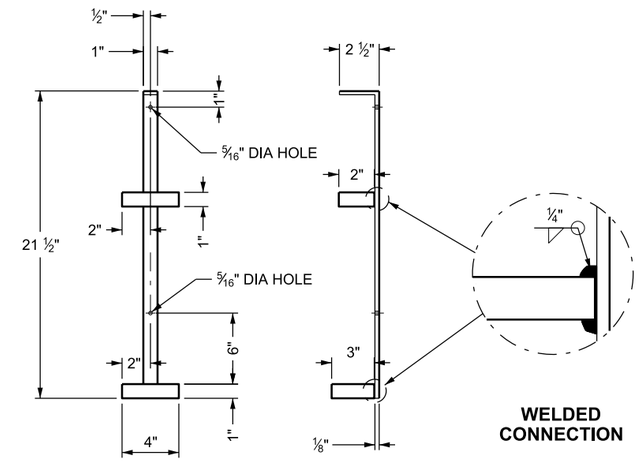

SIGN BRACKET

NOTES:

1. USE WITH FABRIC OR FLEXIBLE SIGN SUBSTRATE ONLY. DO NOT USE ALUMINUM, PLYWOOD, OR COMPOSITE SUBSTRATE.
2. USE DURING DAYLIGHT PERIOD ONLY.
3. REMOVE BRACKET AND SIGN PRIOR TO NIGHTTIME.
4. MAY BE USED ON METAL AND FLEXIBLE DELINEATORS.
5. USE ASTM A 36 STEEL FOR BRACKET. WELD SQUARE LOOPS ONTO VERTICAL METAL PIECE. PAINT OR GALVANIZE SIGN BRACKET AFTER WELDING IS COMPLETED.
6. ATTACH TRAFFIC CONTROL SIGN TO BRACKET WITH SCREWS THROUGH THE 5/16 INCH HOLES SHOWN.

REVISIONS

NO.	DATE	APPR.	REMARKS

UTAH DEPARTMENT OF TRANSPORTATION
STANDARD DRAWINGS FOR ROAD AND BRIDGE CONSTRUCTION
SALT LAKE CITY, UTAH

RECOMMENDED FOR APPROVAL — JAN. 01, 2017 DATE
CHAIRMAN STANDARDS COMMITTEE APPROVED — JAN. 01, 2017 DATE
DEPUTY DIRECTOR

STANDARD DRAWING TITLE
DELINEATOR MOUNTED
WORK ZONE
SIGN BRACKET

STD. DWG. NO.
TC 2D

DGN File: L:\Standard_Drawings\Imperial\2017 Approved\1-All Drawings\TC02D.dgn
28-NOV-2016

1. USE DETAIL 1 (THIS SHEET) TABLE 1 (WORK CLEAR ZONE) AND AASHTO CLEAR ZONE WHEN MITIGATING THE FOLLOWING HAZARDS:
   A. NON-WORKING EQUIPMENT OR VEHICLES
   B. STOCKPILED MATERIAL
   C. WORKING VEHICLES AND WORKERS (NON-FLAGGERS)
   D. OTHER OBJECTS AND FEATURES SUCH AS INCOMPLETE CURBS, BRIDGE PARAPETS, BARRIER BLUNT ENDS, POLES, NON-BREAKAWAY SIGN STRUCTURES
   E. SLOPES STEEPER THAN 4:1 INCLUDING VERTICAL WITH A DROP OFF OF LESS THAN OR EQUAL TO 48 INCHES. (SEE DETAIL 1 ON THIS SHEET FOR EXAMPLES)

2. MITIGATE ALL OTHER HAZARDS WITHIN AASHTO CLEARZONE AS APPROVED BY THE ENGINEER INCLUDING SLOPES STEEPER THAN 4:1 WITH A DROP OFF GREATER THAN 48 INCHES.

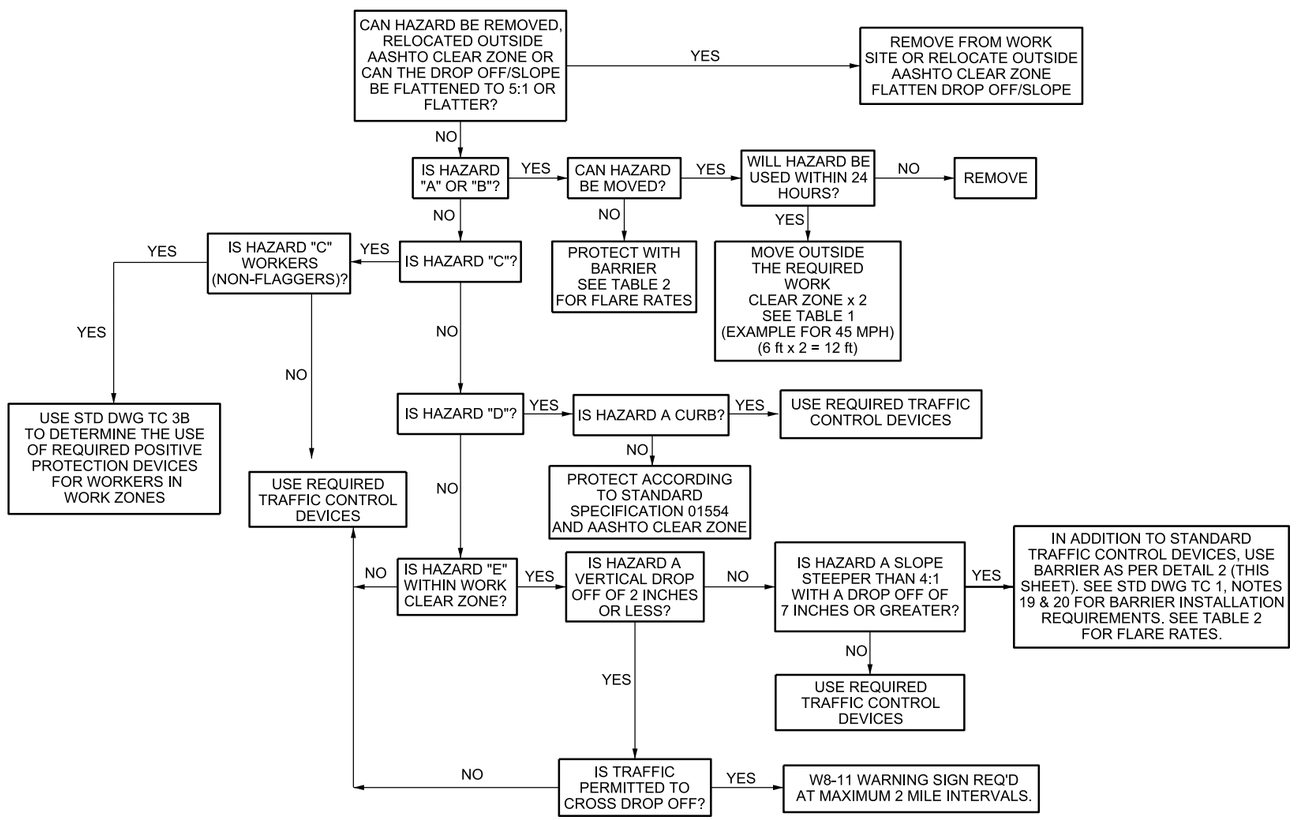

DETAIL 1: HAZARD MITIGATION FLOW CHART

* DROP OFF IS A VERTICAL DIFFERENCE THAT MAY BE FROM THE WORK TO THE ROADWAY OR THE ROADWAY TO THE WORK.

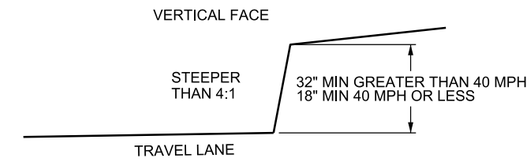

BARRIER REQUIRED FOR SLOPES STEEPER THAN 4:1 AND GREATER THAN INDICATED HEIGHT UNLESS BACKSLOPE IS A SMOOTH UNIFORM SURFACE OF SUITABLE MATERIAL.

SLOPE MUST REMAIN STABLE AND NOT SPALL AT HEIGHT AND SPECIFIED SPEED.

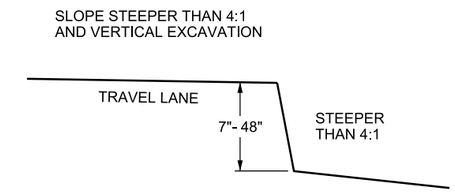

WITHIN WORK CLEAR ZONE USE BARRIER

OUTSIDE WORK CLEAR ZONE USE DEVICES

GREATER THAN 48 INCH OBTAIN APPROVAL FROM THE ENGINEER

DETAIL 2: TYPE "E" VERTICAL DROP OFF HAZARDS

TABLE 1
WORK CLEAR ZONE

POSTED MPH	FT
40 & LESS	3
45	6
50	6.5
55	7.5
60	8
65	8.5
70	9
75	10.5
80	12

TABLE 2
WORK ZONE FLARE RATES TEMPORARY BARRIER

POSTED MPH	FLARE
70 OR GREATER	20:1
65	18:1
60	17:1
55	16:1
50	14:1
45	10:1
40 OR GREATER	6:1

NOTES:

1. USE ROADSIDE DESIGN GUIDE FOR AASHTO CLEAR ZONE, .

REVISIONS

NO.	DATE	APPR.	REMARKS

UTAH DEPARTMENT OF TRANSPORTATION
STANDARD DRAWINGS FOR ROAD AND BRIDGE CONSTRUCTION
SALT LAKE CITY, UTAH

RECOMMENDED FOR APPROVAL — JAN. 01, 2017 DATE
CHAIRMAN: STANDARDS COMMITTEE APPROVED — JAN. 01, 2017 DATE
DEPUTY DIRECTOR

HAZARD MITIGATION
STANDARD DRAWING TITLE

STD. DWG. NO.
TC 3A

DGN File: L:\Standard_Drawings\Imperial\2017 Approved\1-All Drawings\TC03A.dgn
28-NOV-2016

	FACTOR 1 - DURATION OF SPECIFIC WORK ELEMENT (SEE NOTE 3)	POINTS	POINTS
CHOOSE ONE CONDITION	LONG TERM STATIONARY WORK WITH DURATION GREATER THAN TEN MONTHS	10	
	LONG TERM STATIONARY WORK WITH DURATION OF THREE THROUGH TEN MONTHS	8	
	LONG TERM STATIONARY WORK WITH DURATION OF MORE THAN THREE DAYS TO LESS THAN THREE MONTHS, AND THE PROCURMRNT AND INSTALLATION OF POSITVE PROTECTION DEVICES CAN BE COMPLETED PRIOR TO WORK STARTING	6	
	INTERMEDIATE TERM STATIONARY WORK, AND PROCUREMENT & INSTALLATION OF POSITIVE PROTECTION DEVICES CAN BE COMPLETED PRIOR TO WORK STARTING	3	
	SHORT TERM STATIONARY, SHORT DURATION, AND MOBILE WORK	0	
	FACTOR 2 - EXPOSURE (WORK CLEAR ZONE, SEE STD. DWG. TC 3A TABLE 1)		
CHOOSE ONE CONDITION	WORKERS ARE EXPECTED TO BE WITHIN WORK CLEAR ZONE	10	
	WORKERS ARE EXPECTED TO BE OUTSIDE OF THE WORK CLEAR ZONE, BUT WITHIN TWICE THE WORK CLEAR ZONE	6	
	WORKERS ARE EXPECTED TO BE OUTSIDE OF TWICE THE WORK CLEAR ZONE	3	
	WORKERS ARE EXPECTED TO BE OUTSIDE OF THE AASHTO CLEAR ZONE	0	
	FACTOR 3 - POSTED SPEED (PRIOR TO CONSTRUCTION)		
CHOOSE ONE CONDITION	POSTED SPEED IS 55 MPH OR GREATER	10	
	POSTED SPEED IS 40 MPH, 45 MPH, 50 MPH, OR PILOT CAR OPERATION REGARDLESS OF POSTED SPEED	6	
	POSTED SPEED IS 30 MPH OR 35 MPH	3	
	POSTED SPEED IS 25 MPH OR LESS	0	
	FACTOR 4 - LOCATION OF WORK		
CHOOSE ONE CONDITION	BRIDGE STRUCTURES, DROP-OFFS 5 FEET OR GREATER, FILLS OR CUTS STEEPER THAN 2:1, OR CONFINED AREAS WITH NO ESCAPE ROUTE FOR WORKERS	10	
	AREAS WITH BARRIERS OR OTHER IMPEDIMENTS THAT HAVE A VIABLE ESCAPE ROUTE FOR WORKERS	6	
	AREAS WITH DROP-OFFS LESS THAN 5 FEET THAT HAVE A VIABLE ESCAPE ROUTE FOR WORKERS	3	
	OPEN AREA WITH MULTIPLE ESCAPE ROUTE FOR WORKERS	0	

TOTAL POINTS	

UNDER EACH FACTOR CHOOSE WHICH CONDITION BEST DESCRIBES EACH WORK AREA IN THE WORK ZONE. THE POINTS ACCUMULATED WILL DETERMINE WHAT ACTION NEEDS TO BE TAKEN.

RESULTS:

TOTAL IS 31 POINTS OR MORE - POSITIVE PROTECTION DEVICES ARE REQUIRED IN ADDITION TO STANDARD TRAFFIC CONTROL AND ANY OTHER MITIGATION EFFORTS.

TOTAL IS FROM 20 THRU 30 POINTS - POSITIVE PROTECTION DEVICES OR OTHER MITIGATION EFFORTS AND STANDARD TRAFFIC CONTROL ARE REQUIRED TO MITIGATE WORKER EXPOSURE. MITIGATION WILL INCLUDE, AT A MINIMUM, ONE OF THE FOLLOWING AT THE WORKER LOCATION:

1. PROVIDING POSITIVE PROTECTION DEVICES.
2. REDUCING TRAFFIC DEVICE SPACING TO A MAXIMUM OF ONE-HALF THE REQUIRED DEVICE SPACING.
3. PROVIDING A LONGITUDINAL OR LATERAL BUFFER SPACE OR BOTH AND PROVIDING A TRUCK MOUNTED ATTENUATOR.

TOTAL IS LESS THAN 20 POINTS - USE OF STANDARD TRAFFIC CONTROL IS REQUIRED.

NOTES:

1. POSITIVE PROTECTION DEVICES ARE DEVICES THAT CONTAIN AND REDIRECT VEHICLES AND MEET CRASH WORTHINESS CRITERIA.
2. POSITIVE PROTECTION DEVICES INCLUDE PORTABLE CONCRETE BARRIER, BALLAST FILLED BARRIERS, STEEL BARRIERS, MOVABLE BARRIERS, SHADOW VEHICLES WITH ATTENUATORS AND VEHICLE ARRESTING SYSTEMS.
3. WORK DURATION DEFINITIONS:
   A. LONG-TERM IS WORK THAT OCCUPIES A LOCATION MORE THAN THREE DAYS.
   B. INTERMEDIATE-TERM STATIONARY IS WORK THAT OCCUPIES A LOCATION MORE THAN ONE DAYLIGHT PERIOD UP TO 3 DAYS, OR NIGHTTIME WORK LASTING MORE THAN ONE HOUR.
   C. SHORT-TERM STATIONARY IS DAYTIME WORK THAT OCCUPIES A LOCATION FOR MORE THAN ONE HOUR WITHIN A DAYLIGHT PERIOD.
   D. SHORT DURATION IS WORK THAT OCCUPIES A LOCATION UP TO ONE HOUR.
   E. MOBILE IS WORK THAT MOVES INTERMITTENTLY OR CONTINUOUSLY.

USE OF POSITIVE PROTECTION DEVICES FOR WORKERS IN WORK ZONES

REVISIONS

NO.	DATE	APPR.	REMARKS

UTAH DEPARTMENT OF TRANSPORTATION
STANDARD DRAWINGS FOR ROAD AND BRIDGE CONSTRUCTION
SALT LAKE CITY, UTAH

RECOMMENDED FOR APPROVAL — JAN. 01, 2017 DATE
CHAIRMAN STANDARDS COMMITTEE APPROVED — JAN. 01, 2017 DATE
DEPUTY DIRECTOR

HAZARD MITIGATION AND POSITIVE PROTECTION DEVICES
STANDARD DRAWING TITLE

STD. DWG. NO.
TC 3B

28-NOV-2016 DGN File:L:\Standard_Drawings\Imperial\2017 Approved\1-All Drawings\TC03B.dgn

TAPER, BUFFER ZONE & SIGN SPACING CHART

ROAD TYPE	POSTED SPEED MPH (S)	MINIMUM TAPER LENGTH (L)	LENGTH OF BUFFER (BZ)*	MINIMUM SIGN SPACING (SS)**				ONE LANE TWO-WAY FLAGGING
		12 FT LANE CLOSURE		A	B	C	D	TAPER LENGTH
		FT	FT	FT	FT	FT	FT	FT
CONVENTIONAL	30 AND LOWER	180	200	100	100	100	100	50
	35	245	250	350	350	350	175	
	40	320	305					
	45	540	360	500	500	500	250	100
	50	600	425					
	55	660	495					
	60	720	570					
	65	780	645					
FREEWAY/ EXPRESSWAY	65	780	645	1000	1640	2640	500	
	70	840	730					
	75	900	820					
	80	960	910					

* THE LENGTH OF BUFFER (BZ) MAY BE REDUCED WITH THE APPROVAL OF THE ENGINEER
** MAXIMUM SPACING IS THE GIVEN VALUE (SS) MULTIPLIED BY 1.5

1- TAPER LENGTH FORMULAS

SPEED	FORMULA
FOR SPEEDS OF 40 MPH AND LESS	$L = \frac{WS^2}{60}$
FOR SPEEDS OF 45 MPH AND GREATER	L= WS

L = TAPER LENGTH IN FEET
W = WIDTH OF OFFSET IN FEET
S = SPEED IN MPH

⅓ L = FOR SHOULDER CLOSURE TAPER
½ L = FOR LANE SHIFT TAPER

2- CHANNELIZING DEVICES

A) MERGING AND SHIFTING TAPERS: USE A MINIMUM OF ONE DEVICE PER FT OF LANE CLOSURE WIDTH, PLUS ONE ADDITIONAL DEVICE TO START.

B) SHOULDER, ONE-LANE TWO-WAY, AND DOWNSTREAM TAPERS: USE A MINIMUM OF ONE DEVICE PER 3 FT OF WIDTH (OR PORTION THEREOF), PLUS ONE ADDITONAL DEVICE TO START.

C) ON TANGENT: S x 2 = SPACING UP TO 120 FT MAXIMUM.

D) LENGTH OF BUFFER ZONE (BZ) IS THE DISTANCE FROM END OF LANE CLOSURE TAPER TO WORK SPACE, OR ANY OBSTRUCTION PRIOR TO WORK SPACE.

TRAFFIC CONTROL DEVICE LEGEND

- SIGN (FIXED OR PORTABLE)
- CHANNELIZING DEVICE (SEE STD DWG TC 2A)
- DRUMS OR DIRECTIONAL INDICATOR BARRICADE (SEE STD DWG TC 2A)
- FLAGGING STATION
- ARROW BOARD
- BARRIER
- DIRECTION OF TRAFFIC
- TYPE 3 BARRICADE
- DIRECTION OF WORK VEHICLE

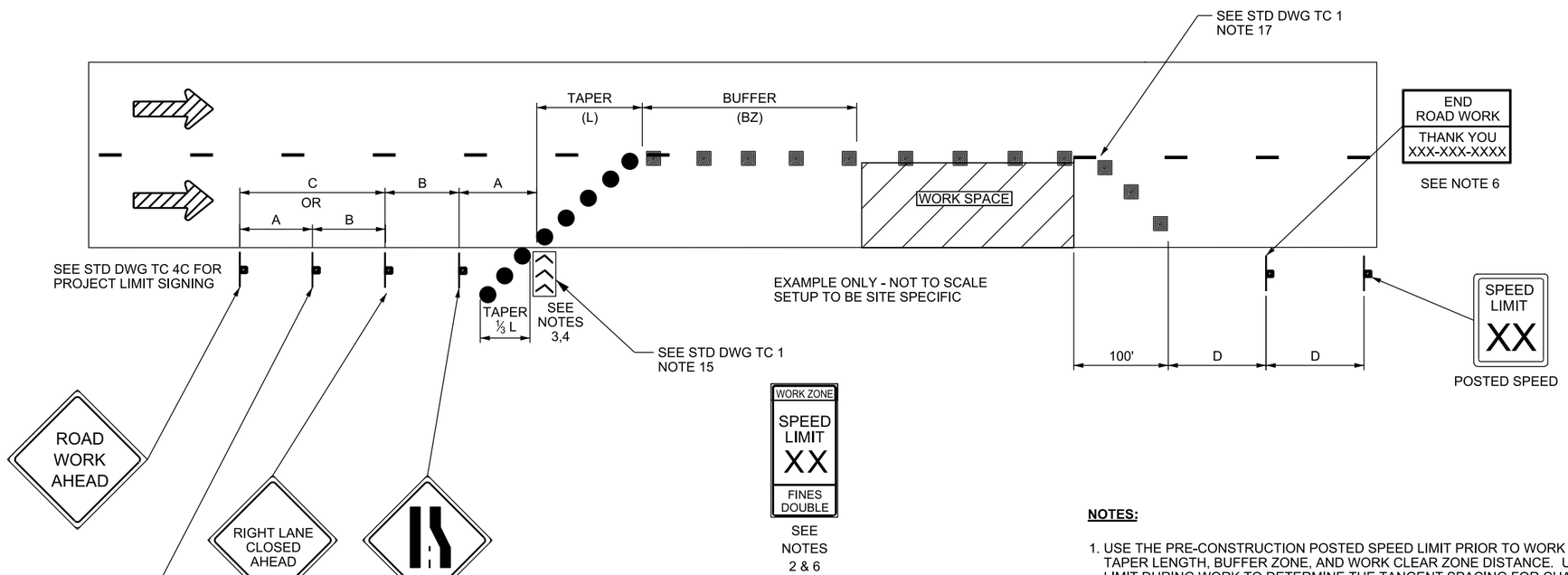

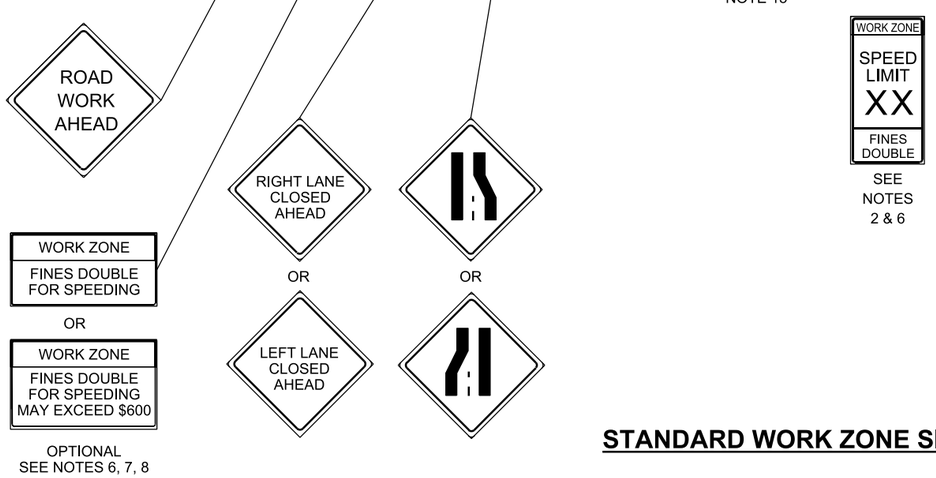

STANDARD WORK ZONE SIGNING

NOTES:

1. USE THE PRE-CONSTRUCTION POSTED SPEED LIMIT PRIOR TO WORK ZONE TO COMPUTE THE SIGN SPACING, TAPER LENGTH, BUFFER ZONE, AND WORK CLEAR ZONE DISTANCE. USE THE POSTED WORK ZONE SPEED LIMIT DURING WORK TO DETERMINE THE TANGENT SPACING FOR CHANNELIZING DEVICES.
2. SIGN MAY BE USED IN WORK ZONES WHERE SPEED LIMIT IS NOT REDUCED.
   A. REPLACE EXISTING SPEED LIMIT SIGNS WITH RS2-6c ASSEMBLIES.
   B. PLACE ADDITIONAL WORK ZONE SPEED LIMIT ASSEMBLIES (RS2-1a), FINES DOUBLE (RS2-6c), AND FINES DOUBLE WITH FINE NOTIFICATION (RS2-6d) SIGNS AT ALL MAJOR INTERSECTIONS AND INTERCHANGES WITHIN THE PROJECT WHEN REDUCED SPEEDS AND THE FINES DOUBLE OR THE FINES DOUBLE WITH FINE NOTIFICATION SIGNING OPTION IS USED.
3. PLACE ARROW BOARD ON SHOULDER WHEN AVAILABLE. PLACE ARROW BOARD IN FIRST 1/3 OF TAPER IN THE CLOSED LANE WHEN NO ADEQUATE SHOULDER IS AVAILABLE.
4. USE SHOULDER TAPER WHEN ARROW BOARD IS PLACED ON SHOULDER.
5. USE THE IDENTICAL LEGEND SUPPLEMENTAL LEFT SIDE SIGNING FOR HIGH-SPEED DIVIDED HIGHWAYS.
6. SEE TC 4D SERIES STD DWGS FOR SIGN DESIGN AND LAYOUT.
7. FINES DOUBLE (RS2-6c) AND FINES DOUBLE WITH FINE NOTIFICATION (RS2-6d) SIGNS MAY BE USED INTERCHANGEBLY.

REVISIONS

NO.	DATE	APPR.	REMARKS

UTAH DEPARTMENT OF TRANSPORTATION
STANDARD DRAWINGS FOR ROAD AND BRIDGE CONSTRUCTION
SALT LAKE CITY, UTAH

RECOMMENDED FOR APPROVAL — JAN. 01, 2017 DATE
CHAIRMAN STANDARDS COMMITTEE APPROVED — JAN. 01, 2017 DATE
DEPUTY DIRECTOR

STANDARD WORK ZONE SIGNING GENERAL
STANDARD DRAWING TITLE

STD. DWG. NO.
TC 4A

DGN File: L:\Standard Drawings\Imperial\2017 Approved\1-All Drawings\TC04A.dgn
28-NOV-2016

TAPER, BUFFER ZONE & SIGN SPACING CHART

ROAD TYPE	POSTED SPEED MPH (S)	MINIMUM TAPER LENGTH (L)	LENGTH OF BUFFER (BZ)*	MINIMUM SIGN SPACING (SS)**				ONE LANE TWO-WAY FLAGGING
		12 FT LANE CLOSURE		A	B	C	D	TAPER LENGTH
		FT	FT	FT	FT	FT	FT	FT
CONVENTIONAL	30 AND LOWER	180	200	100	100	100	100	50
	35	245	250	350	350	350	175	
	40	320	305					
	45	540	360	500	500	500	250	100
	50	600	425					
	55	660	495					
	60	720	570					
	65	780	645					
FREEWAY/ EXPRESSWAY	65	780	645	1000	1640	2640	500	
	70	840	730					
	75	900	820					
	80	960	910					

* THE LENGTH OF BUFFER (BZ) MAY BE REDUCED WITH THE APPROVAL OF THE ENGINEER
** MAXIMUM SPACING IS THE GIVEN VALUE (SS) MULTIPLIED BY 1.5

1- TAPER LENGTH FORMULAS

SPEED	FORMULA
FOR SPEEDS OF 40 MPH AND LESS	$L=\frac{WS^2}{60}$
FOR SPEEDS OF 45 MPH AND GREATER	L= WS

L = TAPER LENGTH IN FEET
W = WIDTH OF OFFSET IN FEET
S = SPEED IN MPH

⅓ L = FOR SHOULDER CLOSURE TAPER
½ L = FOR LANE SHIFT TAPER

2- CHANNELIZING DEVICES

A) MERGING AND SHIFTING TAPERS: USE A MINIMUM OF ONE DEVICE PER FT OF LANE CLOSURE WIDTH, PLUS ONE ADDITIONAL DEVICE TO START.

B) SHOULDER, ONE-LANE TWO-WAY, AND DOWNSTREAM TAPERS: USE A MINIMUM OF ONE DEVICE PER 3 FT OF WIDTH (OR PORTION THEREOF), PLUS ONE ADDITONAL DEVICE TO START.

C) ON TANGENT: S x 2 = SPACING UP TO 120 FT MAXIMUM.

D) LENGTH OF BUFFER ZONE (BZ) IS THE DISTANCE FROM END OF LANE CLOSURE TAPER TO WORK SPACE, OR ANY OBSTRUCTION PRIOR TO WORK SPACE.

TRAFFIC CONTROL DEVICE LEGEND

- SIGN (FIXED OR PORTABLE)
- CHANNELIZING DEVICE (SEE STD DWG TC 2A)
- DRUMS OR DIRECTIONAL INDICATOR BARRICADE (SEE STD DWG TC 2A)
- FLAGGING STATION
- ARROW BOARD
- BARRIER
- DIRECTION OF TRAFFIC
- TYPE III BARRICADE
- DIRECTION OF WORK VEHICLE

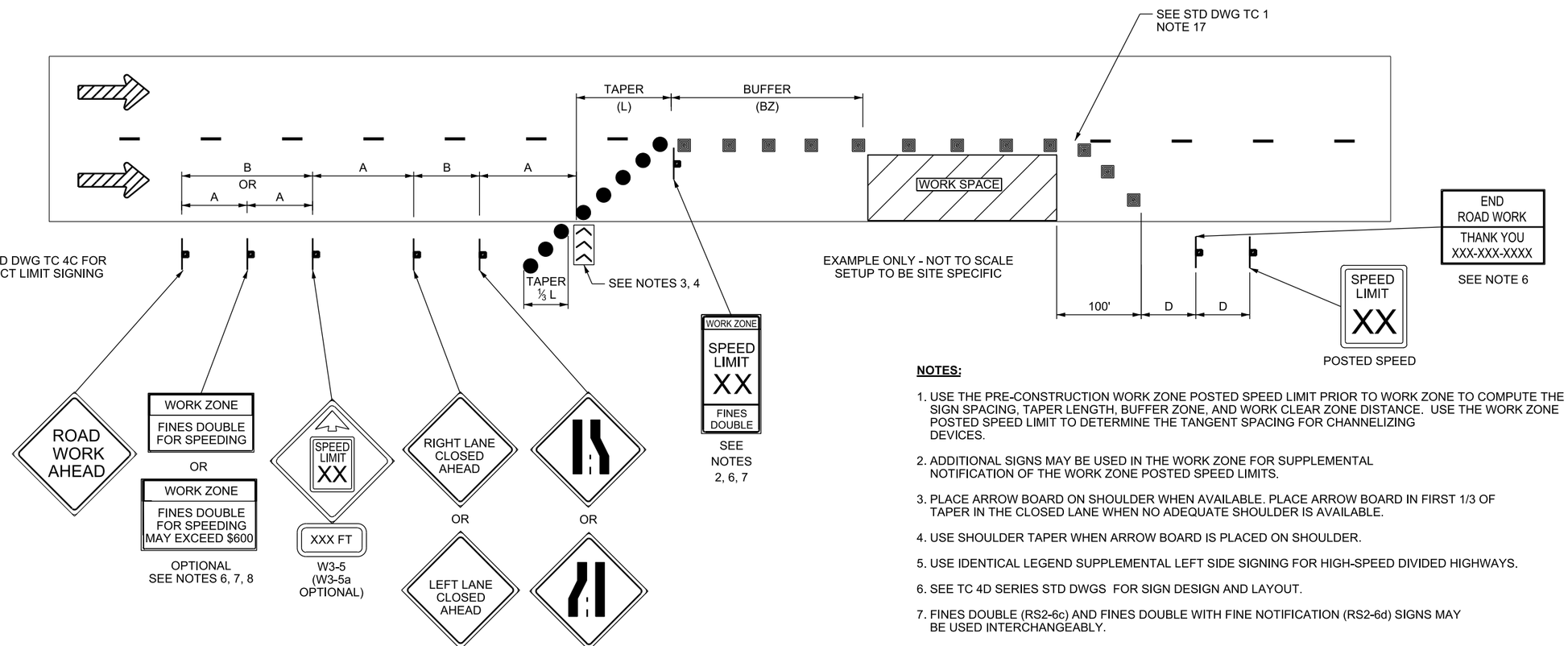

REDUCED SPEED WORK ZONE SIGNING

NOTES:

1. USE THE PRE-CONSTRUCTION WORK ZONE POSTED SPEED LIMIT PRIOR TO WORK ZONE TO COMPUTE THE SIGN SPACING, TAPER LENGTH, BUFFER ZONE, AND WORK CLEAR ZONE DISTANCE. USE THE WORK ZONE POSTED SPEED LIMIT TO DETERMINE THE TANGENT SPACING FOR CHANNELIZING DEVICES.
2. ADDITIONAL SIGNS MAY BE USED IN THE WORK ZONE FOR SUPPLEMENTAL NOTIFICATION OF THE WORK ZONE POSTED SPEED LIMITS.
3. PLACE ARROW BOARD ON SHOULDER WHEN AVAILABLE. PLACE ARROW BOARD IN FIRST 1/3 OF TAPER IN THE CLOSED LANE WHEN NO ADEQUATE SHOULDER IS AVAILABLE.
4. USE SHOULDER TAPER WHEN ARROW BOARD IS PLACED ON SHOULDER.
5. USE IDENTICAL LEGEND SUPPLEMENTAL LEFT SIDE SIGNING FOR HIGH-SPEED DIVIDED HIGHWAYS.
6. SEE TC 4D SERIES STD DWGS FOR SIGN DESIGN AND LAYOUT.
7. FINES DOUBLE (RS2-6c) AND FINES DOUBLE WITH FINE NOTIFICATION (RS2-6d) SIGNS MAY BE USED INTERCHANGEABLY.
8. PLACE ADDITIONAL WORK ZONE SPEED LIMIT ASSEMBLIES (RS2-1a), FINES DOUBLE (RS2-6c), AND FINES DOUBLE WITH FINE NOTIFICATION (RS2-6d) SIGNS AT ALL MAJOR INTERSECTIONS AND INTERCHANGES WITHIN THE PROJECT WHEN REDUCED SPEEDS AND THE FINES DOUBLE OR THE FINES DOUBLE WITH FINE NOTIFICATION SIGNING OPTION IS USED.
9. REDUCED SPEEDS WILL NOT BE ALLOWED WITHOUT THE APPROPRIATE APPROVAL. SEE STD DWG TC 1, NOTE 12.

REVISIONS

NO.	DATE	APPR.	REMARKS

UTAH DEPARTMENT OF TRANSPORTATION
STANDARD DRAWINGS FOR ROAD AND BRIDGE CONSTRUCTION
SALT LAKE CITY, UTAH

RECOMMENDED FOR APPROVAL — JAN. 01, 2017 DATE
CHAIRMAN STANDARDS COMMITTEE APPROVED — JAN. 01, 2017 DATE
DEPUTY DIRECTOR

STANDARD DRAWING TITLE
REDUCED SPEED WORK ZONE SIGNING GENERAL

STD. DWG. NO.
TC 4B1

DGN File: L:\Standard Drawings\Imperial\2017 Approved\1-All Drawings\TC04B1.dgn
28-NOV-2016

TABLE I
TAPER, BUFFER ZONE & SIGN SPACING CHART

ROAD TYPE	POSTED SPEED MPH (S)	MINIMUM TAPER LENGTH (L)	LENGTH OF BUFFER (BZ)*	MINIMUM SIGN SPACING (SS)**			
		12 FT LANE CLOSURE		A	B	C	D
		FT	FT	FT	FT	FT	FT
FREEWAY/ EXPRESSWAY	65	780	645	1000	1640	2640	500
	70	840	730				
	75	900	820				
	80	960	910				

* THE LENGTH OF BUFFER (BZ) MAY BE REDUCED WITH THE APPROVAL OF THE ENGINEER
** MAXIMUM SPACING IS THE GIVEN VALUE (SS) MULTIPLIED BY 1.5

1- TAPER LENGTH FORMULAS

SPEED	FORMULA
FOR SPEEDS OF 45 MPH AND GREATER	L= WS

L = TAPER LENGTH IN FEET
W = WIDTH OF OFFSET IN FEET
S = SPEED IN MPH
⅓ L = FOR SHOULDER CLOSURE TAPER
½ L = FOR LANE SHIFT TAPER

CHANNELIZING DEVICES

A) MERGING AND SHIFTING TAPERS: USE A MINIMUM OF ONE DEVICE PER FT OF LANE CLOSURE WIDTH, PLUS ONE ADDITIONAL DEVICE TO START.

B) SHOULDER, ONE-LANE TWO-WAY, AND DOWNSTREAM TAPERS: USE A MINIMUM OF ONE DEVICE PER 3 FT OF WIDTH (OR PORTION THEREOF), PLUS ONE ADDITIONAL DEVICE TO START.

C) ON TANGENT: S x 2 = SPACING UP TO 120 FT MAXIMUM.

D) LENGTH OF BUFFER ZONE (BZ) IS THE DISTANCE FROM END OF LANE CLOSURE TAPER TO WORK SPACE, OR ANY OBSTRUCTION PRIOR TO WORK SPACE.

TRAFFIC CONTROL DEVICE LEGEND

- SIGN (FIXED OR PORTABLE)
- CHANNELIZING DEVICE (SEE STD DWG TC 2A)
- DRUMS OR DIRECTIONAL INDICATOR BARRICADE
- FLAGGING STATION
- ARROW BOARD
- BARRIER
- DIRECTION OF TRAFFIC
- TYPE 3 BARRICADE
- DIRECTION OF WORK VEHICLE

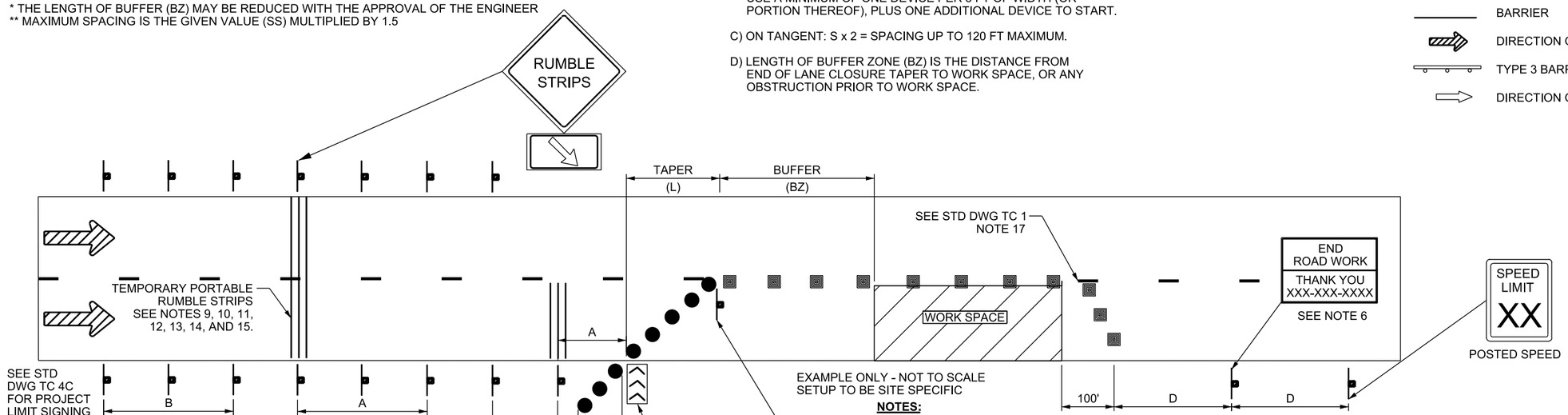

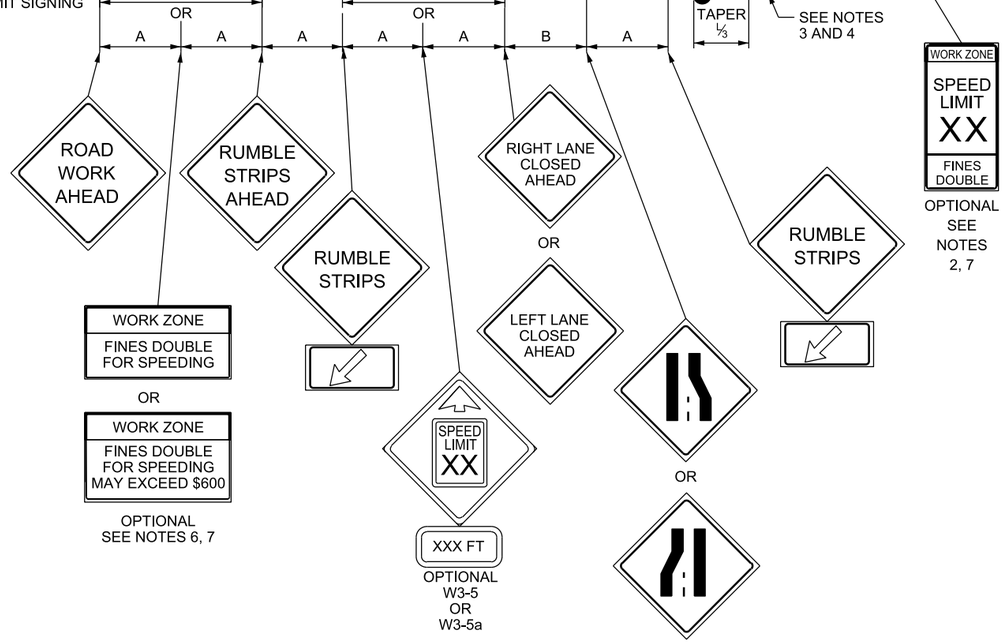

NOTES:

1. USE THE PRE-CONSTRUCTION POSTED SPEED LIMIT PRIOR TO WORK ZONE TO COMPUTE THE SIGN SPACING, TAPER LENGTH, BUFFER ZONE, AND WORK CLEAR ZONE DISTANCE. USE THE POSTED SPEED LIMIT DURING WORK TO DETERMINE THE TANGENT SPACING FOR CHANNELIZING DEVICES.
2. SIGN MAY BE USED IN WORK ZONES WHERE SPEED LIMIT IS NOT REDUCED.
   A. REPLACE EXISTING SPEED LIMIT SIGNS WITH RS2-6c ASSEMBLIES.
   B. PLACE ADDITIONAL WORK ZONE SPEED LIMIT ASSEMBLIES (RS2-1a), FINES DOUBLE (RS2-6c), AND FINES DOUBLE WITH FINE NOTIFICATION (RS2-6d) SIGNS AT ALL MAJOR INTERSECTIONS AND INTERCHANGES WITHIN THE PROJECT WHEN REDUCED SPEEDS AND THE FINES DOUBLE OR THE FINES DOUBLE WITH FINE NOTIFICATION SIGNING OPTION IS USED.
3. PLACE ARROW BOARD ON SHOULDER WHEN AVAILABLE. PLACE ARROW BOARD IN FIRST 1/3 OF TAPER IN THE CLOSED LANE WHEN NO ADEQUATE SHOULDER IS AVAILABLE.
4. USE SHOULDER TAPER WHEN ARROW BOARD IS PLACED ON SHOULDER.
5. USE THE IDENTICAL LEGEND SUPPLEMENTAL LEFT SIDE SIGNING FOR HIGH-SPEED DIVIDED HIGHWAYS.
6. SEE TC 4D SERIES STD DWGS FOR SIGN DESIGN AND LAYOUT.
7. FINES DOUBLE (RS2-6c) AND FINES DOUBLE WITH FINE NOTIFICATION (RS2-6d) SIGNS MAY BE USED INTERCHANGEABLY.
8. TEMPORARY PORTABLE RUMBLE STRIP ARRAY CONSISTS OF THREE TRANSVERSELY PLACED RUMBLE STRIPS EVENLY SPACED AT 25 FT ON CENTER.
9. PLACE WS28-1 RUMBLE STRIPS AHEAD SIGN PRIOR TO PLACING TEMPORARY PORTABLE RUMBLE STRIPS.
10. REMOVE TEMPORARY PORTABLE RUMBLE STRIPS PRIOR TO REMOVING WS28-1 RUMBLE STRIPS AHEAD SIGN.
11. RESET THE TEMPORARY PORTABLE RUMBLE STRIPS AS NECESSARY TO MAINTAIN PROPER ALIGNMENT, SPACING, AND LOCATION. REFER TO SPECIAL PROVISION 01554M FOR MAINTENANCE OF TEMPORARY PORTABLE RUMBLE STRIPS.
12. DO NOT USE TEMPORARY PORTABLE RUMBLE STRIPS ON HORIZONTAL CURVES UNLESS APPROVED BY THE ENGINEER.
13. DO NOT PLACE TEMPORARY PORTABLE RUMBLE STRIPS DURING SNOW EVENTS.
14. PLACE ONE TEMPORARY PORTABLE RUMBLE STRIP ARRAY IN EACH TRAVEL LANE.
15. PLACE ONE TEMPORARY PORTABLE RUMBLE STRIP ARRAY AT DISTANCE "A" (SEE TABLE 1) IN ADVANCE OF EACH LANE CLOSURE TAPER IN EACH LANE THAT IS BEING CLOSED.
16. RELOCATE THE TEMPORARY PORTABLE RUMBLE STRIPS AND ASSOCIATED SIGNING WHEN VEHICLE QUEUES ARE EXPECTED OR OCCUR IN ADVANCE OF TEMPORARY PORTABLE RUMBLE STRIPS.
17. REDUCED SPEEDS WILL NOT BE ALLOWED WITHOUT THE APPROVAL OF THE ENGINEER. USE THE REDUCED SPEED LIMIT AHEAD SIGN, THE FINES DOUBLE SPEED LIMIT SIGN, AND THE SPEED LIMIT SIGN.
18. USE THE STANDARDS FOUND ON THIS DRAWING ON RURAL TWO LANE FREEWAYS.

REVISIONS

NO.	DATE	APPR.	REMARKS

UTAH DEPARTMENT OF TRANSPORTATION
STANDARD DRAWINGS FOR ROAD AND BRIDGE CONSTRUCTION
SALT LAKE CITY, UTAH

RECOMMENDED FOR APPROVAL — JAN. 01, 2017 DATE
CHAIRMAN STANDARDS COMMITTEE APPROVED — JAN. 01, 2017 DATE
DEPUTY DIRECTOR

STANDARD DRAWING TITLE
TEMPORARY PORTABLE RUMBLE STRIPS FREEWAY

STD. DWG. NO.
TC 4B2

DGN File:L:\Standard Drawings\Imperial\2017 Approved\1-All Drawings\TC04B2.dgn
28-NOV-2016

TAPER, BUFFER ZONE & SIGN SPACING CHART

ROAD TYPE	POSTED SPEED MPH (S)	MINIMUM TAPER LENGTH (L)	LENGTH OF BUFFER (BZ)*	MINIMUM SIGN SPACING (SS)**				
		12 FT LANE CLOSURE		A	B	C	D	TAPER LENGTH
		FT	FT	FT	FT	FT	FT	FT
CONVENTIONAL	30 AND LOWER	180	200	100	100	100	100	50
	35	245	250	350	350	350	175	
	40	320	305					
	45	540	360	500	500	500	250	100
	50	600	425					
	55	660	495					
	60	720	570					
	65	780	645					
FREEWAY/ EXPRESSWAY	65	780	645	1000	1640	2640	500	
	70	840	730					
	75	900	820					
	80	960	910					

* THE LENGTH OF BUFFER (BZ) MAY BE REDUCED WITH THE APPROVAL OF THE ENGINEER
** MAXIMUM SPACING IS THE GIVEN VALUE (SS) MULTIPLIED BY 1.5

1- TAPER LENGTH FORMULAS

SPEED	FORMULA
FOR SPEEDS OF 40 MPH AND LESS	$L=\frac{WS^2}{60}$
FOR SPEEDS OF 45 MPH AND GREATER	L= WS

L = TAPER LENGTH IN FEET
W = WIDTH OF OFFSET IN FEET
S = SPEED IN MPH

⅓ L = FOR SHOULDER CLOSURE TAPER
½ L = FOR LANE SHIFT TAPER

2- CHANNELIZING DEVICES

A) MERGING AND SHIFTING TAPERS: USE A MINIMUM OF ONE DEVICE PER FT OF LANE CLOSURE WIDTH, PLUS ONE ADDITIONAL DEVICE TO START.

B) SHOULDER, ONE-LANE TWO-WAY, AND DOWNSTREAM TAPERS: USE A MINIMUM OF ONE DEVICE PER 3 FT OF WIDTH (OR PORTION THEREOF), PLUS ONE ADDITONAL DEVICE TO START.

C) ON TANGENT: S x 2 = SPACING UP TO 120 FT MAXIMUM.

D) LENGTH OF BUFFER ZONE (BZ) IS THE DISTANCE FROM END OF LANE CLOSURE TAPER TO WORK SPACE, OR ANY OBSTRUCTION PRIOR TO WORK SPACE.

TRAFFIC CONTROL DEVICE LEGEND

- SIGN (FIXED OR PORTABLE)
- CHANNELIZING DEVICE (SEE STD DWG TC 2A)
- DRUMS OR DIRECTIONAL INDICATOR BARRICADE
- FLAGGING STATION
- ARROW BOARD
- BARRIER
- DIRECTION OF TRAFFIC
- TYPE III BARRICADE
- DIRECTION OF WORK VEHICLE

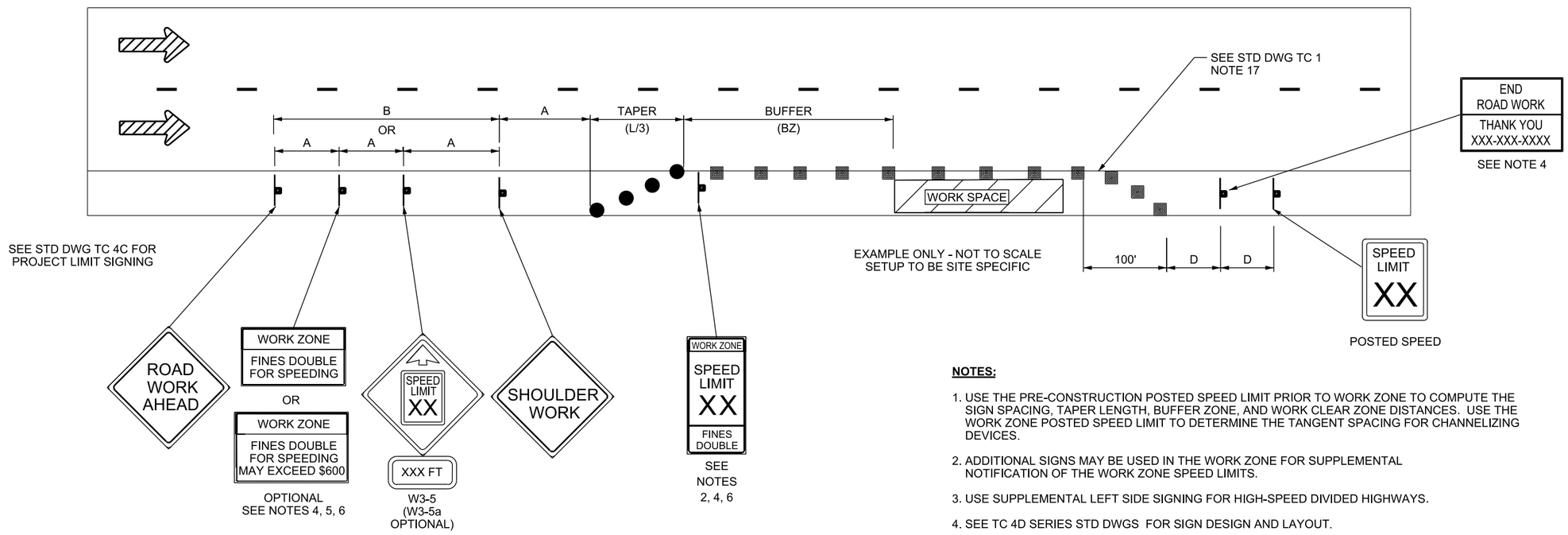

REDUCED SPEED SHOULDER WORK ZONE SIGNING

NOTES:

1. USE THE PRE-CONSTRUCTION POSTED SPEED LIMIT PRIOR TO WORK ZONE TO COMPUTE THE SIGN SPACING, TAPER LENGTH, BUFFER ZONE, AND WORK CLEAR ZONE DISTANCES. USE THE WORK ZONE POSTED SPEED LIMIT TO DETERMINE THE TANGENT SPACING FOR CHANNELIZING DEVICES.
2. ADDITIONAL SIGNS MAY BE USED IN THE WORK ZONE FOR SUPPLEMENTAL NOTIFICATION OF THE WORK ZONE SPEED LIMITS.
3. USE SUPPLEMENTAL LEFT SIDE SIGNING FOR HIGH-SPEED DIVIDED HIGHWAYS.
4. SEE TC 4D SERIES STD DWGS FOR SIGN DESIGN AND LAYOUT.
5. FINES DOUBLE (RS2-6c) AND FINES DOUBLE WITH FINE NOTIFICATION (RS2-6d) SIGNS MAY BE USED INTERCHANGEBLY.
6. PLACE ADDITIONAL WORK ZONE SPEED LIMIT ASSEMBLIES (RS2-1a), FINES DOUBLE (RS2-6c), AND FINES DOUBLE WITH FINE NOTIFICATION (RS2-6d) SIGNS AT ALL MAJOR INTERSECTIONS AND INTERCHANGES WITHIN THE PROJECT WHEN REDUCED SPEEDS AND THE FINES DOUBLE OR THE FINES DOUBLE WITH FINE NOTIFICATION SIGNING OPTION IS USED.

REVISIONS

NO.	DATE	APPR.	REMARKS

UTAH DEPARTMENT OF TRANSPORTATION
STANDARD DRAWINGS FOR ROAD AND BRIDGE CONSTRUCTION
SALT LAKE CITY, UTAH

RECOMMENDED FOR APPROVAL — JAN. 01, 2017 DATE
CHAIRMAN STANDARDS COMMITTEE APPROVED — JAN. 01, 2017 DATE
DEPUTY DIRECTOR

REDUCED SPEED SHOULDER WORK ZONE SIGNING GENERAL
STANDARD DRAWING TITLE

STD. DWG. NO.
TC 4B3

28-NOV-2016 DGN File:L:\Standard Drawings\Imperial\2017 Approved\1-All Drawings\TC04B3.dgn

TAPER, BUFFER ZONE & SIGN SPACING CHART

ROAD TYPE	POSTED SPEED MPH (S)	MINIMUM TAPER LENGTH (L)	LENGTH OF BUFFER (BZ)*	MINIMUM SIGN SPACING (SS)**				
		12 FT LANE CLOSURE		A	B	C	D	TAPER LENGTH
		FT	FT	FT	FT	FT	FT	FT
CONVENTIONAL	30 AND LOWER	180	200	100	100	100	100	50
	35	245	250	350	350	350	175	
	40	320	305					
	45	540	360	500	500	500	250	100
	50	600	425					
	55	660	495					
	60	720	570					
	65	780	645					
FREEWAY/ EXPRESSWAY	65	780	645	1000	1640	2640	500	
	70	840	730					
	75	900	820					
	80	960	910					

* THE LENGTH OF BUFFER (BZ) MAY BE REDUCED WITH THE APPROVAL OF THE ENGINEER
** MAXIMUM SPACING IS THE GIVEN VALUE (SS) MULTIPLIED BY 1.5

1- TAPER LENGTH FORMULAS

SPEED	FORMULA
FOR SPEEDS OF 40 MPH AND LESS	$L = \frac{WS^2}{60}$
FOR SPEEDS OF 45 MPH AND GREATER	L= WS

L = TAPER LENGTH IN FEET
W = WIDTH OF OFFSET IN FEET
S = SPEED IN MPH

⅓ L = FOR SHOULDER CLOSURE TAPER
½ L = FOR LANE SHIFT TAPER

2- CHANNELIZING DEVICES

A) MERGING AND SHIFTING TAPERS: USE A MINIMUM OF ONE DEVICE PER FT OF LANE CLOSURE WIDTH, PLUS ONE ADDITIONAL DEVICE TO START.

B) SHOULDER, ONE-LANE TWO-WAY, AND DOWNSTREAM TAPERS: USE A MINIMUM OF ONE DEVICE PER 3 FT OF WIDTH (OR PORTION THEREOF), PLUS ONE ADDITONAL DEVICE TO START.

C) ON TANGENT: S x 2 = SPACING UP TO 120 FT MAXIMUM.

D) LENGTH OF BUFFER ZONE (BZ) IS THE DISTANCE FROM END OF LANE CLOSURE TAPER TO WORK SPACE, OR ANY OBSTRUCTION PRIOR TO WORK SPACE.

TRAFFIC CONTROL DEVICE LEGEND

- SIGN (FIXED OR PORTABLE)
- CHANNELIZING DEVICE (SEE STD DWG TC 2A)
- DRUMS OR DIRECTIONAL INDICATOR BARRICADE
- FLAGGING STATION
- ARROW BOARD
- BARRIER
- DIRECTION OF TRAFFIC
- TYPE III BARRICADE
- DIRECTION OF WORK VEHICLE

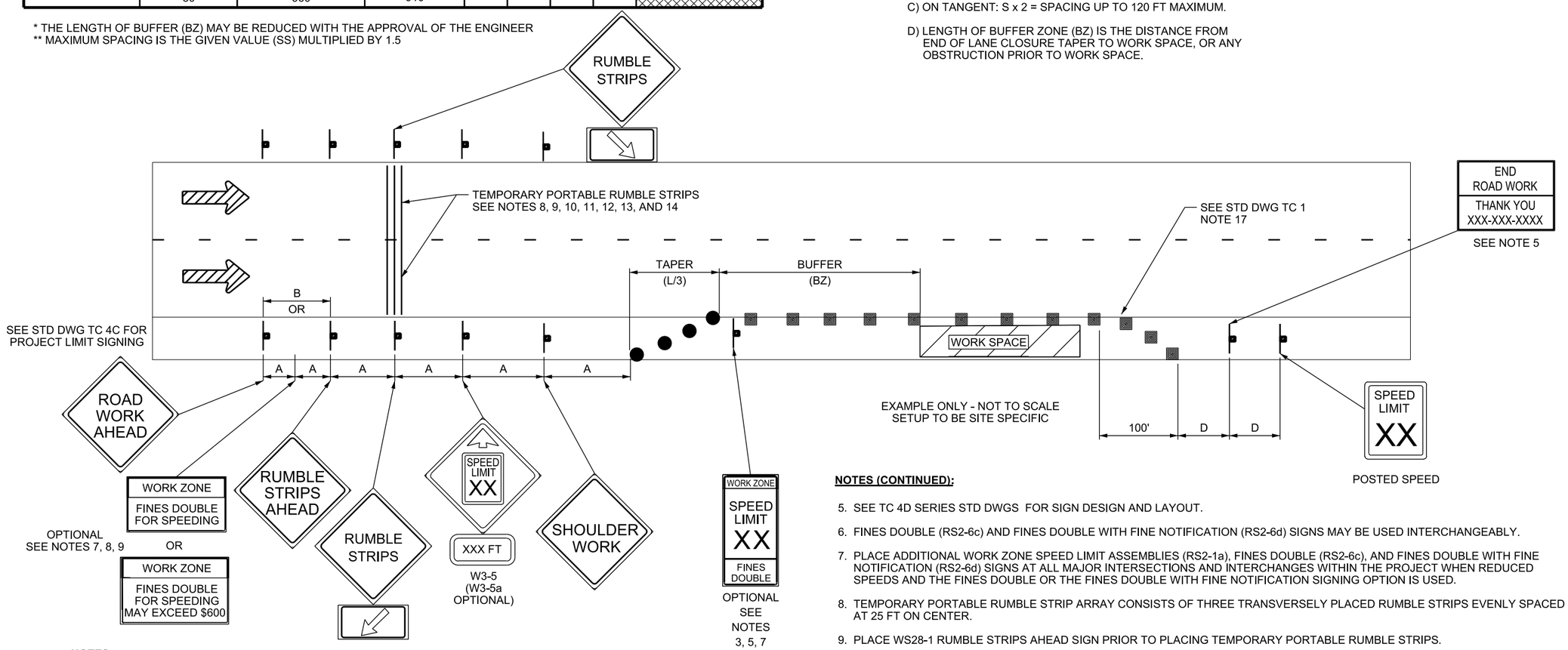

NOTES:

1. USE THE PRE-CONSTRUCTION POSTED SPEED LIMIT PRIOR TO WORK ZONE TO COMPUTE THE SIGN SPACING, TAPER LENGTH, BUFFER ZONE, AND WORK CLEAR ZONE DISTANCES. USE THE WORK ZONE REDUCED SPEED LIMIT TO DETERMINE THE TANGENT SPACING FOR CHANNELIZING DEVICES.
2. REMOVE OR COVER ALL WORK ZONE REDUCED SPEED LIMIT ASSEMBLIES (RS2-1a) AND THE WORK ZONE REDUCED SPEED LIMIT AHEAD (W3-5 SERIES) SIGNS WHEN NO ONE IS WORKING, EXCEPT AS APPROVED BY THE REGION TRAFFIC ENGINEER. DO NOT COVER PRE-CONSTRUCTION POSTED SPEED LIMIT ASSEMBLIES (RS2-1a).
3. ADDITIONAL SIGNS MAY BE USED IN THE WORK ZONE FOR SUPPLEMENTAL NOTIFICATION OF THE WORK ZONE SPEED LIMITS.
4. USE SUPPLEMENTAL LEFT SIDE SIGNING FOR HIGH-SPEED DIVIDED HIGHWAYS.

NOTES (CONTINUED):

5. SEE TC 4D SERIES STD DWGS FOR SIGN DESIGN AND LAYOUT.
6. FINES DOUBLE (RS2-6c) AND FINES DOUBLE WITH FINE NOTIFICATION (RS2-6d) SIGNS MAY BE USED INTERCHANGEABLY.
7. PLACE ADDITIONAL WORK ZONE SPEED LIMIT ASSEMBLIES (RS2-1a), FINES DOUBLE (RS2-6c), AND FINES DOUBLE WITH FINE NOTIFICATION (RS2-6d) SIGNS AT ALL MAJOR INTERSECTIONS AND INTERCHANGES WITHIN THE PROJECT WHEN REDUCED SPEEDS AND THE FINES DOUBLE OR THE FINES DOUBLE WITH FINE NOTIFICATION SIGNING OPTION IS USED.
8. TEMPORARY PORTABLE RUMBLE STRIP ARRAY CONSISTS OF THREE TRANSVERSELY PLACED RUMBLE STRIPS EVENLY SPACED AT 25 FT ON CENTER.
9. PLACE WS28-1 RUMBLE STRIPS AHEAD SIGN PRIOR TO PLACING TEMPORARY PORTABLE RUMBLE STRIPS.
10. REMOVE TEMPORARY PORTABLE RUMBLE STRIPS PRIOR TO REMOVING WS28-1 RUMBLE STRIPS AHEAD SIGN.
11. RESET THE TEMPORARY PORTABLE RUMBLE STRIPS AS NECESSARY TO MAINTAIN PROPER ALIGNMENT, SPACING, AND LOCATION.
12. DO NOT USE TEMPORARY PORTABLE RUMBLE STRIPS ON HORIZONTAL CURVES UNLESS APPROVED BY REGION TRAFFIC ENGINEER.
13. REFER TO SPECIAL PROVISION 01554M FOR MAINTENANCE OF TEMPORARY PORTABLE RUMBLE STRIPS.
14. DO NOT PLACE TEMPORARY PORTABLE RUMBLE STRIPS DURING SNOW EVENTS.
15. RELOCATE THE TEMPORARY PORTABLE RUMBLE STRIPS AND ASSOCIATED SIGNING WHEN VEHICLE QUEUES ARE EXPECTED OR OCCUR IN ADVANCE OF TEMPORARY PORTABLE RUMBLE STRIPS.

REVISIONS

NO.	DATE	APPR.	REMARKS

UTAH DEPARTMENT OF TRANSPORTATION
STANDARD DRAWINGS FOR ROAD AND BRIDGE CONSTRUCTION
SALT LAKE CITY, UTAH

RECOMMENDED FOR APPROVAL — JAN. 01, 2017 DATE
CHAIRMAN STANDARDS COMMITTEE
APPROVED — JAN. 01, 2017 DATE
DEPUTY DIRECTOR

STANDARD DRAWING TITLE
SHOULDER WORK ZONE
TEMPORARY PORTABLE
RUMBLE STRIPS
FREEWAY/DIVIDED
HIGHWAY

STD. DWG. NO.
TC 4B4

DGN File:L:\Standard Drawings\Imperial\2017 Approved\1-All Drawings\TC04B4.dgn
28-NOV-2016

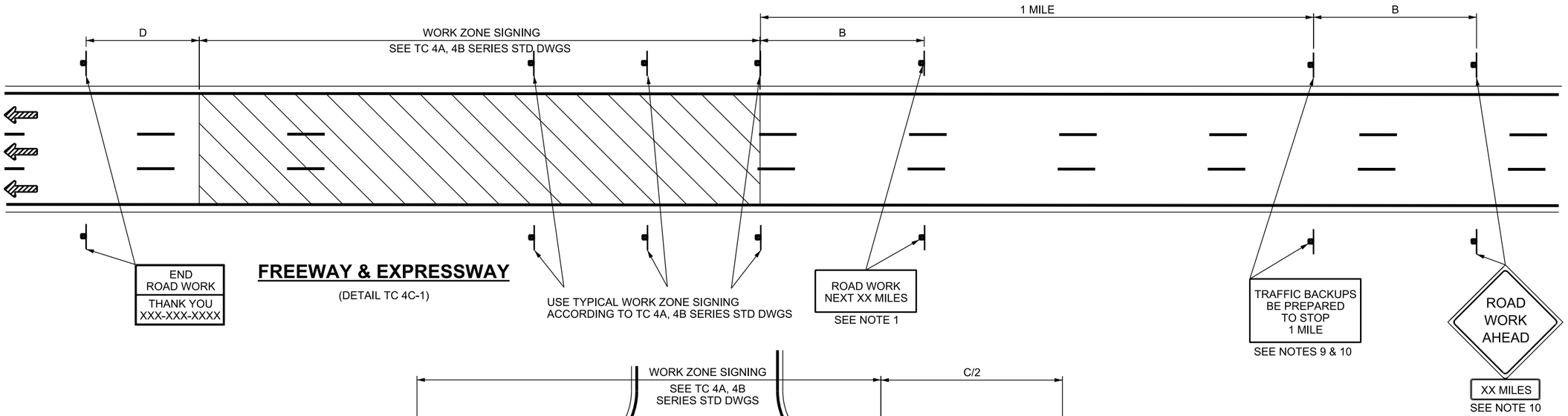

FREEWAY & EXPRESSWAY

(DETAIL TC 4C-1)

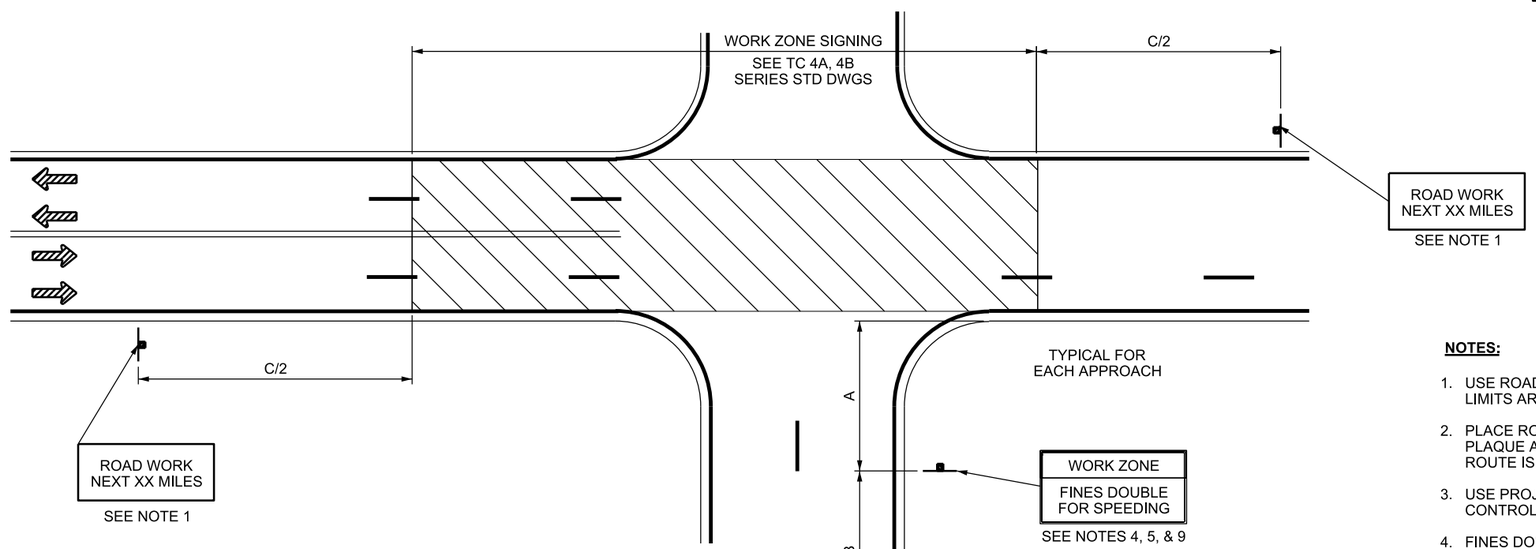

SINGLE & MULTI-LANE UNDIVIDED ROADWAYS

(SIGN SEQUENCING REQUIRED IN BOTH DIRECTIONS)
(DETAIL TC 4C-2)

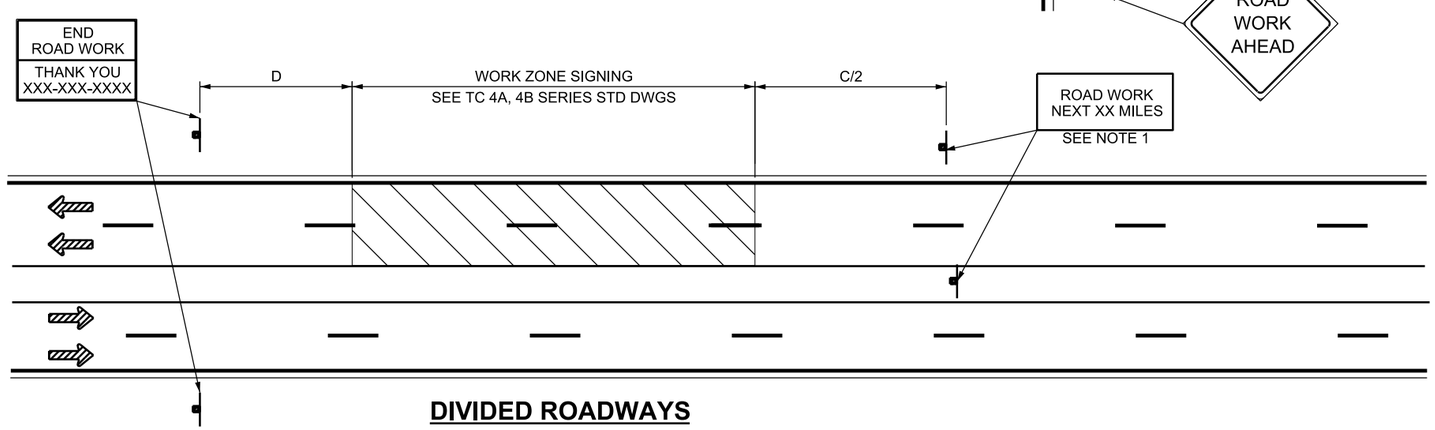

DIVIDED ROADWAYS

(DETAIL TC 4C-3)

NOTES:

1. USE ROAD WORK NEXT XX MILES SIGN (G20-1) WHEN PROJECT LIMITS ARE GREATER THAN 2 MILES IN LENGTH.
2. PLACE ROAD WORK AHEAD SIGN WITH AN "XX" MILES (W16-3aP) PLAQUE AT ROUTE SEPARATION POINT IF AN ALTERNATE ROUTE IS AVAILABLE AND SIGNIFICANT DELAYS ARE EXPECTED.
3. USE PROJECT LIMIT SIGNING IN BOTH DIRECTIONS IF TRAFFIC CONTROL AFFECTS TRAFFIC IN BOTH DIRECTIONS.
4. FINES DOUBLE (RS2-6c) SIGN IS OPTIONAL.
5. FINES DOUBLE (RS2-6c) AND FINES DOUBLE WITH FINE NOTIFICATION (RS2-6d) SIGNS MAY BE USED INTERCHANGEABLY.
6. PLACE ADDITIONAL WORK ZONE SPEED LIMIT ASSEMBLIES (RS2-1a), FINES DOUBLE (RS2-6c), AND FINES DOUBLE WITH FINE NOTIFICATION (RS2-6d) SIGNS AT ALL MAJOR INTERSECTIONS AND INTERCHANGES WITHIN THE PROJECT WHEN REDUCED SPEEDS AND THE FINES DOUBLE OR THE FINES DOUBLE WITH FINE NOTIFICATION SIGNING OPTION IS USED.
7. PLACE SIGNING ON RIGHT SHOULDER AND MEDIAN WHEN CONDITIONS PERMIT.
8. SEE STD DWG TC 4A FOR TAPER, BUFFER ZONE, AND SIGN SPACING CHART.
9. SEE TC 4D SERIES STD DWGS FOR SIGN DESIGN AND LAYOUT.
10. USE TRAFFIC BACKUP SIGNING WHEN VEHICLE QUEUES ARE EXPECTED OR OCCUR IN ADVANCE OF THE INSTALLED WORK ZONE ADVANCE WARNING SIGNS. PLACE TRAFFIC BACKUPS BE PREPARED TO STOP 1 MILE (WS4-3a) SIGNS TWO MILES IN ADVANCE OF THE WORK AREA. PLACE TRAFFIC BACKUPS BE PREPARED TO STOP "X" MILES (WS4-3b) SIGNS IN INCREMENTS OF ONE MILE WITH THE APPROPRIATE "X" MILES LEGEND TO STAY AHEAD OF ANTICIPATED QUEUE OF VEHICLES. PLACE ADDITIONAL ROAD WORK AHEAD SIGNS WITH A "XX" MILES (W16-3aP) PLAQUE IN ADVANCE OF FURTHERMOST UPSTREAM TRAFFIC BACKUP SIGNING.

NO.	DATE	APPR.	REMARKS

REVISIONS

UTAH DEPARTMENT OF TRANSPORTATION
STANDARD DRAWINGS FOR ROAD AND BRIDGE CONSTRUCTION
SALT LAKE CITY, UTAH

RECOMMENDED FOR APPROVAL — JAN. 01, 2017 DATE
CHAIRMAN STANDARDS COMMITTEE APPROVED — JAN. 01, 2017 DATE
DEPUTY DIRECTOR

PROJECT LIMIT SIGNING
STANDARD DRAWING TITLE

STD. DWG. NO.
TC 4C

DGN File:L:\Standard Drawings\Imperial\2017 Approved\1-All Drawings\TC04C.dgn
28-NOV-2016

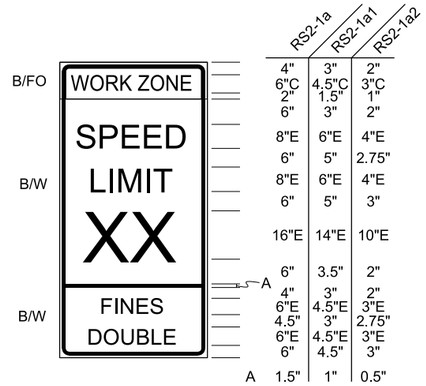

RS2-1a - 48 X 96 INCHES FREEWAY AND EXPRESSWAY
RS2-1a1 - 36 X 72 INCHES CONVENTIONAL MULTI LANE
RS2-1a2 - 24 X 48 INCHES CONVENTIONAL SINGLE LANE

RS2-1a SERIES WORK ZONE SPEED LIMIT SIGNS

96 X 48 INCHES

RS16-4b WORK ZONE FENDER BENDER SIGN

OPTIONAL, SEE NOTE 1

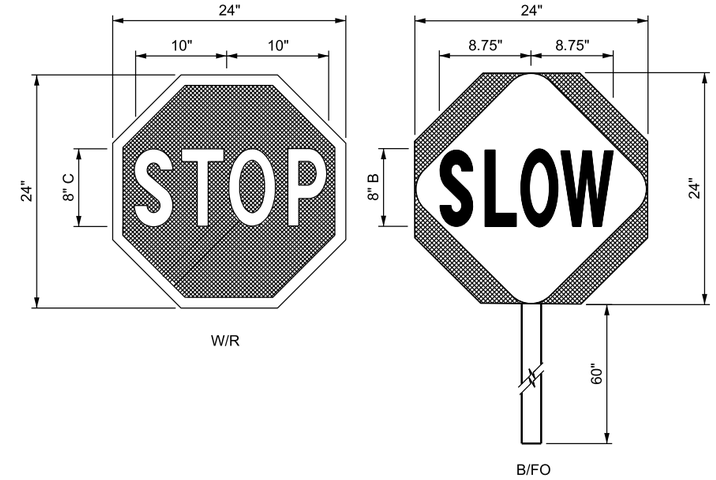

RS1-1 STOP SIGN **WS20-8a SLOW SIGN**

FLAGGER STOP - SLOW PADDLE

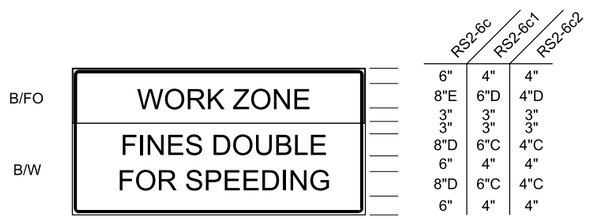

RS2-6c 96 X 48 INCHES OVERSIZED
RS2-6c1 60 X 36 INCHES 45 MPH AND GREATER
RS2-6c2 42 X 30 INCHES 40 MPH AND LESS

RS2-6c SERIES WORK ZONE FINES DOUBLE SIGNS

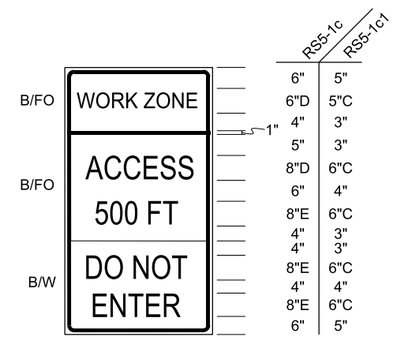

RS5-1c - 60 X 78 INCHES FREEWAY AND EXPRESSWAY
RS5-1c1 - 36 X 60 INCHES CONVENTIONAL

RS5-1c SERIES WORK ZONE ACCESS ADVANCE SIGNS

SEE NOTE 2

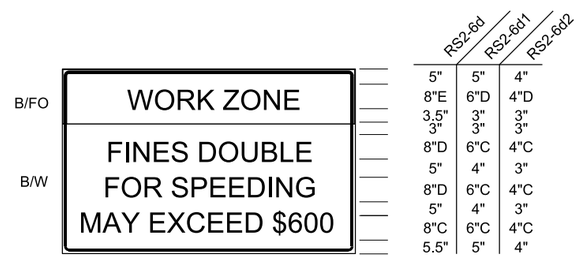

RS2-6d1 - 78 X 48 INCHES 45 MPH AND GREATER
RS2-6d2 - 54 X 36 INCHES 40 MPH AND LESS

RS2-6d SERIES WORK ZONE FINES DOUBLE SIGN WITH FINE NOTIFICATIONS

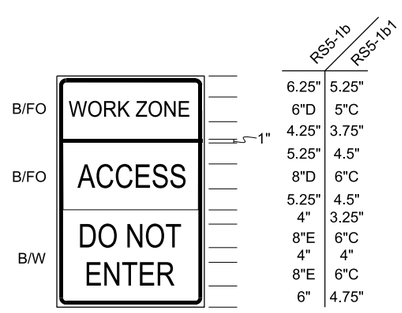

RS5-1b - 60 X 66 INCHES FREEWAY AND EXPRESSWAY
RS5-1b1 - 36 X 54 INCHES CONVENTIONAL

RS5-1b SERIES WORK ZONE ACCESS SIGNS

NOTES:

1. USE THE WORK ZONE FENDER BENDER SIGN TO REQUIRE MOTORISTS TO MOVE THEIR VEHICLE OUT OF THE TRAFFIC LANES AND TO THE NEXT EXIT IF THEY HAVE BEEN INVOLVED IN A CRASH.
2. RECOMMENDED DISTANCE TO ACCESS 500 FT FREEWAY AND EXPRESSWAY AND 250 FT CONVENTIONAL ROADS.
3. PLACE TWO FLUORESCENT ORANGE STRIPS OF RETROREFLECTIVE SHEETING, 4 x 24 INCHES, WITHIN 12 INCHES FROM THE RIGHT AND LEFT EDGES ON THE BACK OF SIGNS USED WITH PORTABLE SUPPORTS.

REVISIONS

NO.	DATE	APPR.	REMARKS

UTAH DEPARTMENT OF TRANSPORTATION
STANDARD DRAWINGS FOR ROAD AND BRIDGE CONSTRUCTION
SALT LAKE CITY, UTAH

RECOMMENDED FOR APPROVAL — JAN. 01, 2017 DATE
CHAIRMAN STANDARDS COMMITTEE APPROVED — JAN. 01, 2017 DATE
DEPUTY DIRECTOR — DATE

WORK ZONE SPECIALTY SIGNS
STANDARD DRAWING TITLE

STD. DWG. NO.
TC 4D1

DGN File:L:\Standard Drawings\Imperial\2017 Approved\1-All Drawings\TC04D1.dgn
28-NOV-2016

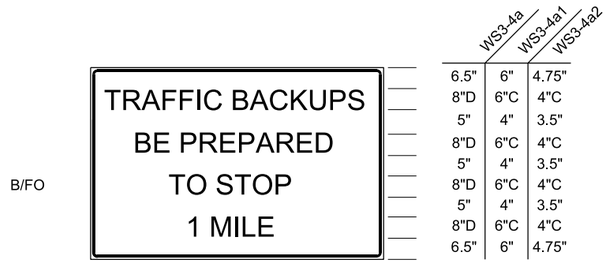

WS3-4a - 114 X 60 INCHES FREEWAY AND EXPRESSWAY
WS3-4a1 - 72 X 48 INCHES CONVENTIONAL 45 MPH AND GREATER
WS3-4a2 - 54 X 36 INCHES CONVENTIONAL 45 MPH AND LESS

WS3-4a SERIES

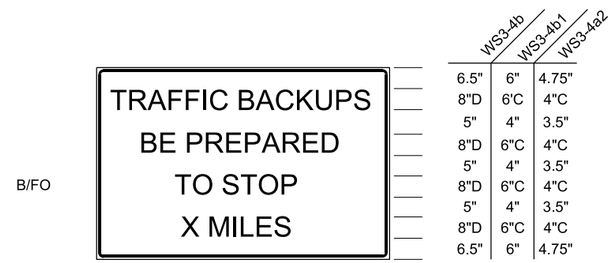

WS3-4b - 114 X 60 INCHES FREEWAY AND EXPRESSWAY
WS3-4b1 - 72 X 48 INCHES CONVENTIONAL 45 MPH AND GREATER
WS3-4b2 - 54 X 36 INCHES CONVENTIONAL 45 MPH AND LESS

WS3-4b SERIES

WS3-4 SERIES TRAFFIC BACKUP SIGNS

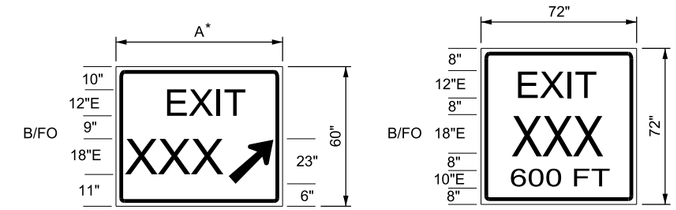

E5-1aW SERIES **ES5-1dW SERIES**

* SEE TABLE 1 FOR WIDTH

ES5-1W SERIES WORK ZONE EXIT SIGNS

XXX EXIT NUMBER

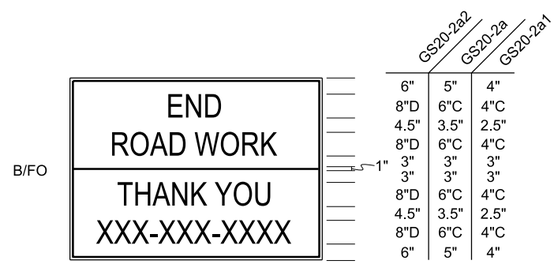

GS20-2a2 - 84 X 60 INCHES OVERSIZED
GS20-2a - 60 X 48 INCHES FREEWAY AND EXPRESSWAY
GS20-2a1 - 42 X 36 INCHES CONVENTIONAL
XXX CONTRACTOR'S PHONE NUMBER
NO INTERNET OR EMAIL ADDRESSES

GS20-2a SERIES END ROAD WORK INFORMATION SIGNS

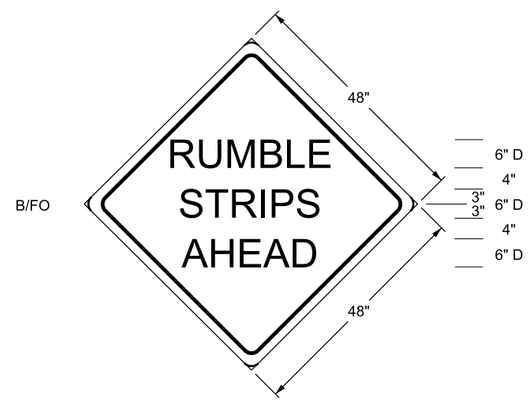

WS28-1 RUMBLE STRIPS AHEAD SIGN

SIGN WIDTH		
	NUMBER OF DIGITS	A
ES5-1aW1	X	78 INCHES
ES5-1aW2	XX	78 INCHES
ES5-1aW3	XXX	96 INCHES

ES5-1aW SERIES WORK ZONE
EXIT GORE SIGNS
TABLE 1

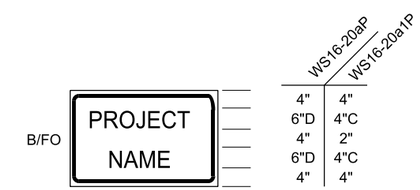

WS16-20aP - 60 X 24 INCHES FREEWAY AND EXPRESSWAY
WS16-20a1P - 36 X 18 INCHES CONVENTIONAL

WS16-20aP SERIES WORK ZONE ACCESS PROJECT IDENTIFIER PLAQUES

SEE NOTE 1

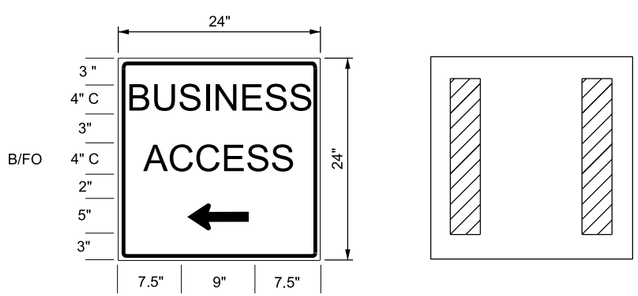

FRONT

USE BLACK LEGEND ON FLUORESCENT ORANGE RETROREFLECTIVE SHEETING.

BACK

PLACE TWO 4 X 18 INCHES FLUORESCENT ORANGE RETROREFLECTIVE STRIPS VERTICALLY ON THE SIGN BACK.

GS20-5 SERIES BUSINESS ACCESS SIGNS

LEFT ARROW SHOWN

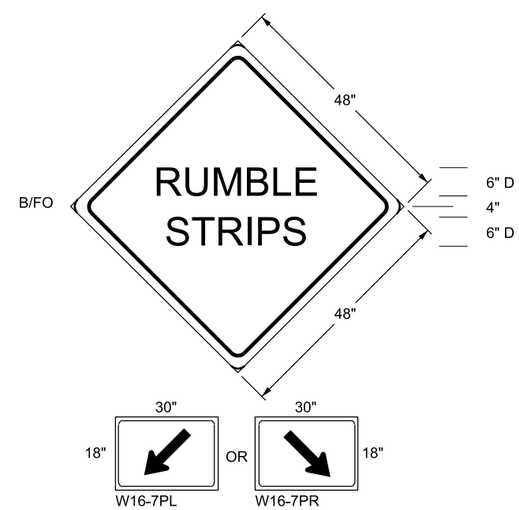

RUMBLE STRIPS AHEAD (WS28-2) AND W16-7 ASSEMBLY

NOTE:

1. USE PROJECT IDENTIFIER ONLY. DO NOT INCLUDE PROMOTIONAL OR OTHER INFORMATIONAL IDENTIFICATIONS OF PUBIC OFFICIALS, CONTRACTORS, ORGANIZATIONAL AFFILIATIONS, RELATED LOGOS AND SYMBOLS.
2. PLACE TWO FLUORESCENT ORANGE STRIPS OF RETROREFLECTIVE SHEETING, 4 x 24 INCHES, WITHIN 12 INCHES FROM THE RIGHT AND LEFT EDGES ON THE BACK OF SIGNS USED WITH PORTABLE SUPPORTS.

REVISIONS

NO.	DATE	APPR.	REMARKS

UTAH DEPARTMENT OF TRANSPORTATION
STANDARD DRAWINGS FOR ROAD AND BRIDGE CONSTRUCTION
SALT LAKE CITY, UTAH

RECOMMENDED FOR APPROVAL — JAN. 01, 2017 DATE
CHAIRMAN STANDARDS COMMITTEE APPROVED — JAN. 07, 2017 DATE
DEPUTY DIRECTOR

WORK ZONE SPECIALTY SIGNS
STANDARD DRAWING TITLE

STD. DWG. NO.
TC 4D2

DGN File:L:\Standard Drawings\Imperial\2017 Approved\1-All Drawings\TC0402.dgn
28-NOV-2016

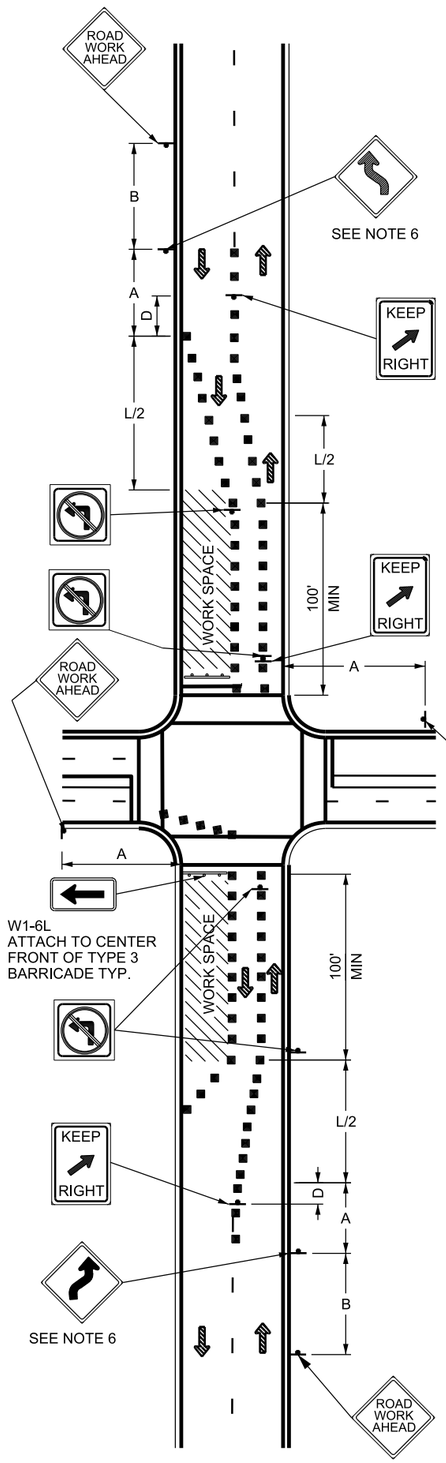

(DETAIL TC 5-1)

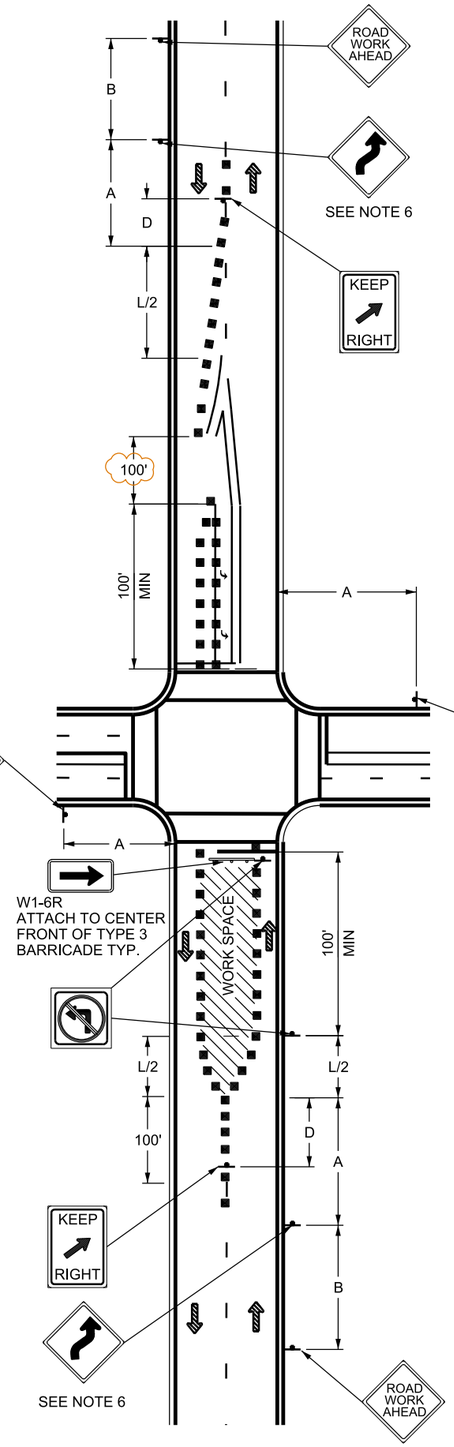

(DETAIL TC 5-2)

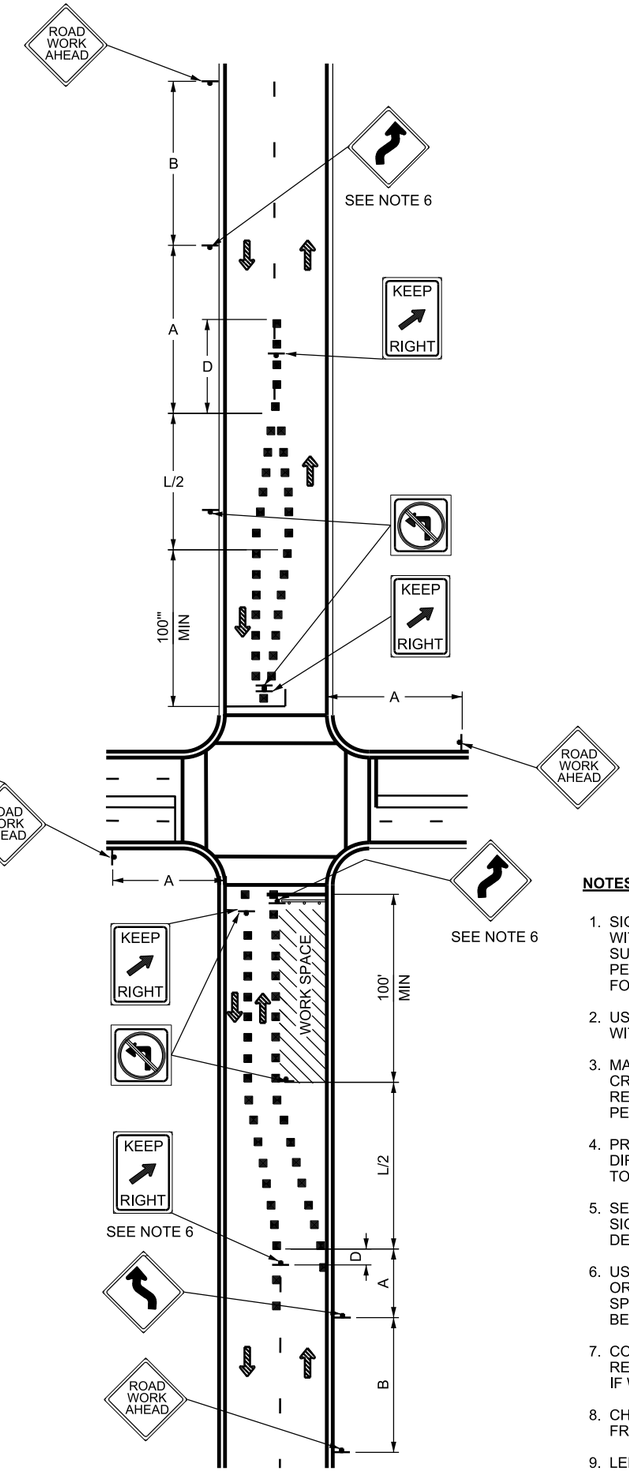

(DETAIL TC 5-3)

NOTES:

1. SIGNING AND DEVICES SHOWN FOR 2 LANE ROADWAY WITH NO REDUCTION IN NUMBER OF LANES. SUBSTITUTE ADVANCE SIGNING AND DEVICES AS PER TYPICAL LANE CLOSURE. SEE STD DWG TC 8 FOR LANE REDUCTION ON 4 LANES OR GREATER.
2. USE OF FLAGGING OPERATION IS OPTIONAL WITH LANE CLOSURE.
3. MAINTAIN PEDESTRIAN TRAFFIC AT EXISTING CROSSWALKS AND ON EXISTING SIDEWALKS. REROUTE ACCORDING TO STD DWG TC 6 WHEN PEDESTRIAN TRAFFIC CANNOT BE MAINTAINED.
4. PROVIDE A MINIMUM 10 FT TRAFFIC LANE IN EACH DIRECTION. USE A FLAGGING OPERATION ACCORDING TO STD DWG TC 14 IF THIS CANNOT BE DONE.
5. SEE STD DWG TC 4A FOR TAPER, BUFFER ZONE & SIGN SPACING CHART AND TRAFFIC CONTROL DEVICE LEGEND.
6. USE APPROPRIATE SIGN SERIES (W1-3, W1-4, OR W24-1 SERIES) BASED UPON THE UPSTREAM SPEED LIMIT AND THE TANGENT DISTANCE BETWEEN CURVES.
7. CONTACT REGION TRAFFIC ENGINEER FOR REQUIREMENTS FOR DETERMINING SIGNAL NEEDS IF WORKING IN A SIGNALIZED INTERSECTION.
8. CHANGES TO SIGNAL PHASING REQUIRE APPROVAL FROM THE ENGINEER.
9. LEFT OR RIGHT TURNS MAY BE PROHIBITED WHEN APPROVED BY THE ENGINEER.

REVISIONS

NO.	DATE	APPR.	REMARKS

UTAH DEPARTMENT OF TRANSPORTATION
STANDARD DRAWINGS FOR ROAD AND BRIDGE CONSTRUCTION
SALT LAKE CITY, UTAH

RECOMMENDED FOR APPROVAL — JAN. 01, 2017 DATE
CHAIRMAN STANDARDS COMMITTEE APPROVED — JAN. 01, 2017 DATE
DEPUTY DIRECTOR

TRAFFIC CONTROL
URBAN INTERSECTION
WITH ROADWAYS UNDER
50MPH

STANDARD DRAWING TITLE

STD. DWG. NO.
TC 5

DGN File: L:\Standard_Drawings\Imperial\2017 Approved\1-All Drawings\TC05.dgn
28-NOV-2016

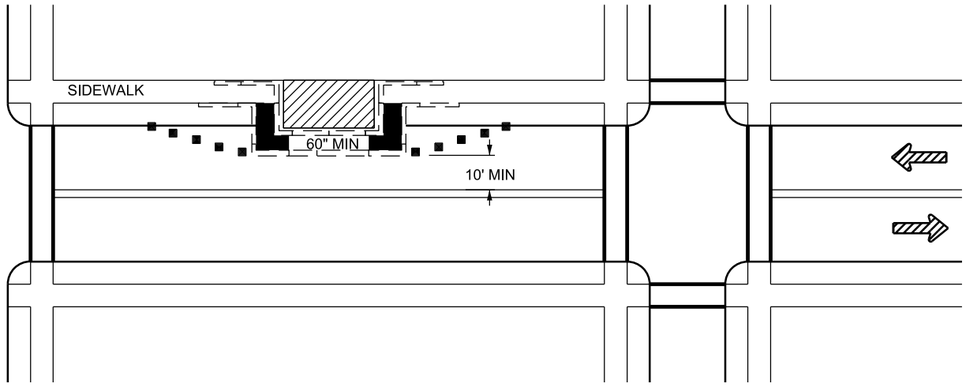

TEMPORARY WALKWAY

(DETAIL TC 6-1) SEE NOTE 1

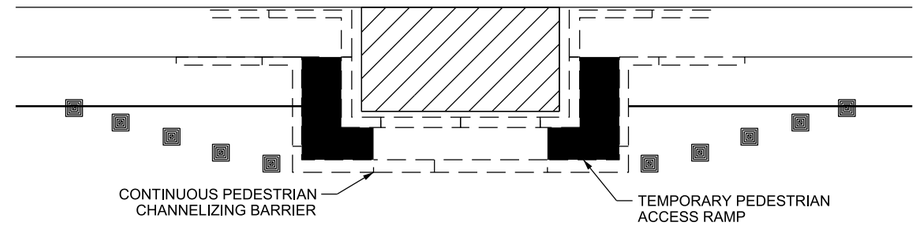

TEMPORARY PEDESTRIAN ACCESS RAMP

SEE NOTE 8

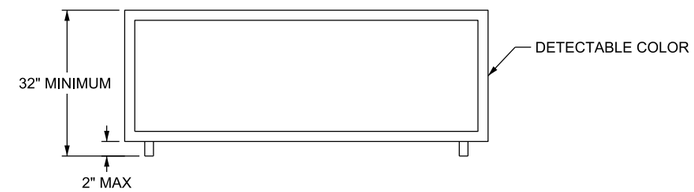

CONTINUOUS PEDESTRIAN CHANNELIZING BARRIER

SEE NOTE 8

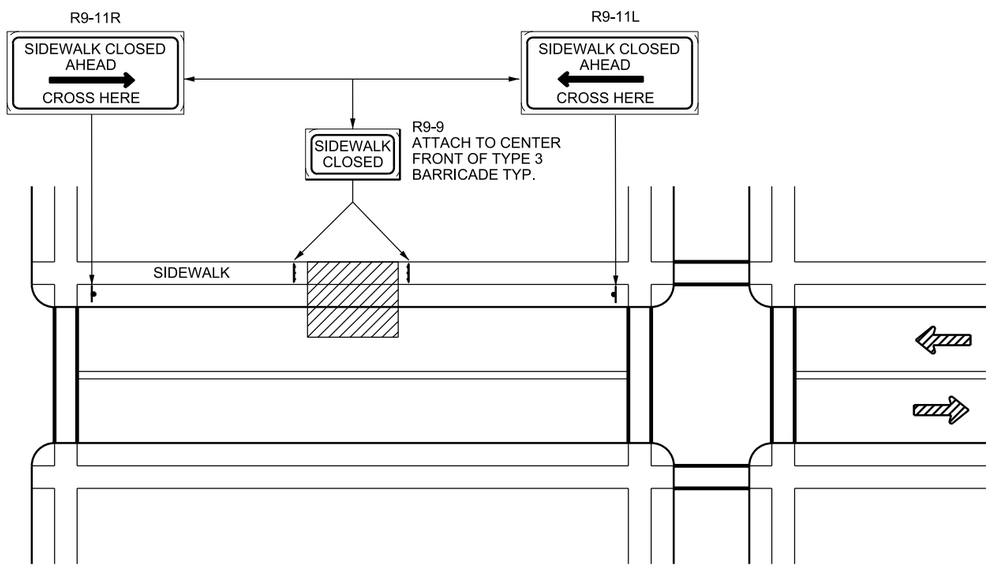

ALTERNATE ROUTE

(DETAIL TC 6-2) SEE NOTES 1 & 12

NOTES:

1. ONLY THE TRAFFIC CONTROL DEVICES CONTROLLING PEDESTRIAN FLOWS ARE SHOWN. OTHER DEVICES ARE REQUIRED TO CONTROL TRAFFIC ON THE STREET. USE LANE CLOSURE SIGNING OR ROAD NARROWS SIGNS, AS NEEDED.
2. PROVIDE A TEMPORARY WALKWAY A MINIMUM OF 48 INCHES WIDE AROUND THE WORK SPACE IF WALKWAY IS CLOSED TO PEDESTRIANS. MAINTAIN A MINIMUM TRAVELED WAY WIDTH OF 10 FT. PROVIDE LANE SHIFTS, LANE CLOSURES, OR ENCROACH INTO OPPOSITE DIRECTION OF TRAFFIC ACCORDING TO STD DWG TC 8 IF THE MINIMUM CAN NOT BE ACHIEVED.
3. DIRECT PEDESTRIANS TO ALTERNATE ROUTES IF WALKWAY CANNOT BE PROVIDED. (SEE DETAIL TC 6-2)
4. COVER THE TEMPORARY WALKWAY WHEN POTENTIAL OF FALLING MATERIAL EXISTS.
5. CONSTRUCT TEMPORARY WALKWAY AND ACCESSIBLE RAMP OR BLENDED TRANSITION (PA SERIES STD DWGS) WITH A WOOD FLOOR OR PAVED SURFACE SO THAT IT IS TRAVERSABLE BY A WHEELCHAIR.
6. COMPLETE WORK ON ONE SIDE AND REOPEN PRIOR TO STARTING WORK ON THE OTHER SIDE WHEN SIDEWALKS EXIST ON BOTH SIDES OF STREET.
7. MOUNT SIGNS ON BARRICADE OR 7 FT MINIMUM HEIGHT ABOVE SIDEWALK.
8. MAINTAIN AN ACCESSIBLE AND DETECTABLE PEDESTRIAN FACILITY ALONG THE ALTERNATE PEDESTRIAN ROUTE WHEN THE TEMPORARY TRAFFIC CONTROL ZONE AFFECTS EXISTING ACCESSIBLE AND DETECTABLE PEDESTRIAN FACILITIES. USE A CONTINUOUS DETECTABLE BOTTOM AND TOP SURFACE DETECTABLE BY LONG CANE USERS WHEN CHANNELIZATION DEVICES ARE USED TO CHANNELIZE PEDESTRIANS. THE BOTTOM OF THE CONTINUOUS PEDESTRIAN CHANNELIZING BARRIER WILL BE NO HIGHER THAN 2 INCHES MEASURED FROM THE GROUND. THE TOP OF THE CONTINUOUS PEDESTRIAN CHANNELIZING BARRIER WILL BE NO LOWER THAN 32 INCHES MEASURED FROM THE GROUND.
9. USE A MINIMUM 20 FT CORNER RADIUS TO DEVELOP A TEMPORARY WALKWAY AROUND A CORNER.
10. DIRECT PEDESTRIANS TO AN INTERSECTION OR MARKED CROSSWALK AS AN ALTERNATE ROUTE WHEN POSSIBLE.
11. CONSULT THE ENGINEER WHEN SCHOOL ROUTING PLANS ARE AFFECTED.
12. DO NOT DIRECT PEDESTRIANS TO OPPOSITE SIDE OF STREET IF THE SIDEWALK DOES NOT EXIST ON THE OPPOSITE SIDE OF THE STREET.
13. PROVIDE A 5 x 5 FT PASSING AREA EVERY 200 FT OF TEMPORARY SIDEWALK.
14. SEE PA SERIES STD DWGS FOR PEDESTRIAN ACCESS REQUIREMENTS.

REVISIONS

NO.	DATE	APPR.	REMARKS

UTAH DEPARTMENT OF TRANSPORTATION
STANDARD DRAWINGS FOR ROAD AND BRIDGE CONSTRUCTION
SALT LAKE CITY, UTAH

RECOMMENDED FOR APPROVAL — JAN. 01, 2017 DATE
CHAIRMAN STANDARDS COMMITTEE APPROVED — JAN. 01, 2017 DATE
DEPUTY DIRECTOR

TEMPORARY PEDESTRIAN ACCESS ROUTE

STANDARD DRAWING TITLE

STD. DWG. NO.
TC 6

DGN File:L:\Standard_Drawings\Imperial\2017 Approved\1-All Drawings\TC06.dgn
28-NOV-2016

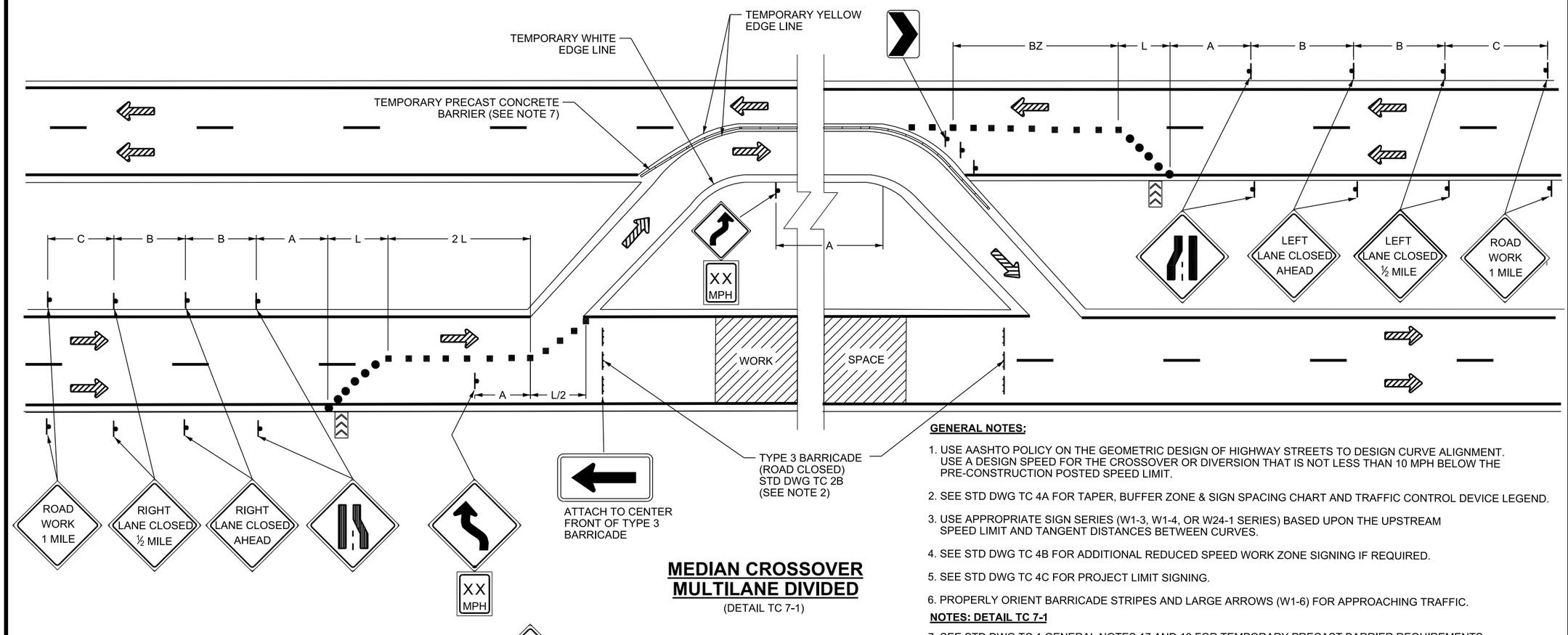

MEDIAN CROSSOVER MULTILANE DIVIDED

(DETAIL TC 7-1)

GENERAL NOTES:

1. USE AASHTO POLICY ON THE GEOMETRIC DESIGN OF HIGHWAY STREETS TO DESIGN CURVE ALIGNMENT. USE A DESIGN SPEED FOR THE CROSSOVER OR DIVERSION THAT IS NOT LESS THAN 10 MPH BELOW THE PRE-CONSTRUCTION POSTED SPEED LIMIT.
2. SEE STD DWG TC 4A FOR TAPER, BUFFER ZONE & SIGN SPACING CHART AND TRAFFIC CONTROL DEVICE LEGEND.
3. USE APPROPRIATE SIGN SERIES (W1-3, W1-4, OR W24-1 SERIES) BASED UPON THE UPSTREAM SPEED LIMIT AND TANGENT DISTANCES BETWEEN CURVES.
4. SEE STD DWG TC 4B FOR ADDITIONAL REDUCED SPEED WORK ZONE SIGNING IF REQUIRED.
5. SEE STD DWG TC 4C FOR PROJECT LIMIT SIGNING.
6. PROPERLY ORIENT BARRICADE STRIPES AND LARGE ARROWS (W1-6) FOR APPROACHING TRAFFIC.

NOTES: DETAIL TC 7-1

7. SEE STD DWG TC 1 GENERAL NOTES 17 AND 18 FOR TEMPORARY PRECAST BARRIER REQUIREMENTS.

NOTES: DETAIL TC 7-2

8. USE CHANNELIZING DEVICES ON UNPAVED SURFACES.
9. PROVIDE A MINIMUM 10 FT TRAFFIC LANE IN EACH DIRECTION. USE A FLAGGING OPERATION AS ACCORDING TO STD DWG TC 14 IF THIS CANNOT BE DONE.
10. PLACE PASS WITH CARE (R4-2) SIGN ONLY IF PASSING IS ALLOWED DOWNSTREAM OF WORK ZONE

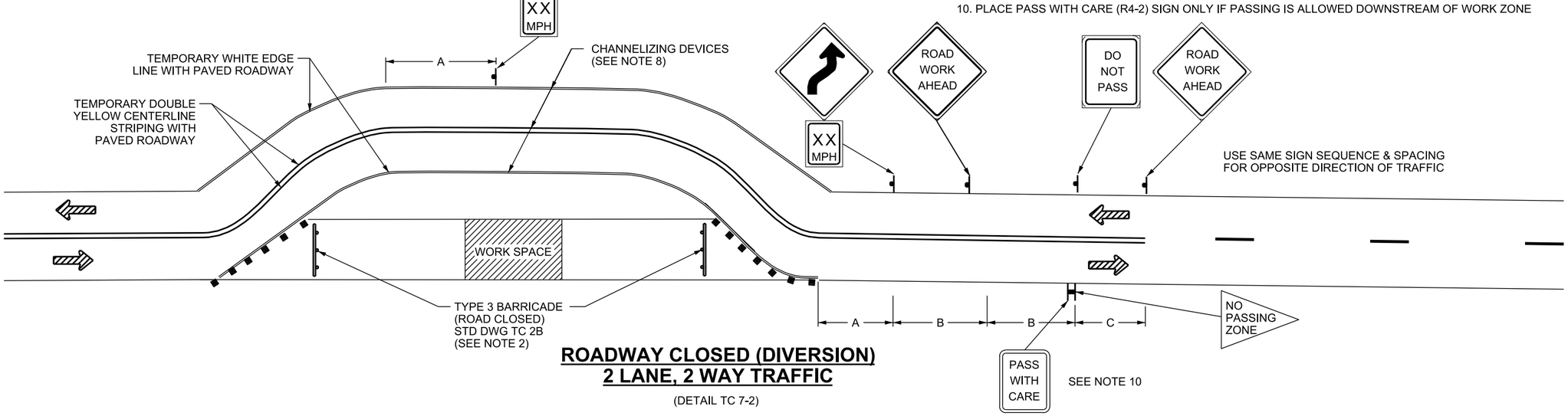

ROADWAY CLOSED (DIVERSION) 2 LANE, 2 WAY TRAFFIC

(DETAIL TC 7-2)

NO.	DATE	APPR.	REMARKS

REVISIONS

UTAH DEPARTMENT OF TRANSPORTATION
STANDARD DRAWINGS FOR ROAD AND BRIDGE CONSTRUCTION
SALT LAKE CITY, UTAH

RECOMMENDED FOR APPROVAL — JAN.01.2017 DATE
CHAIRMAN STANDARDS COMMITTEE APPROVED — JAN.01.2017 DATE
DEPUTY DIRECTOR

MEDIAN CROSSOVER AND 2-LANE, 2-WAY DIVERSION

STANDARD DRAWING TITLE

STD. DWG. NO.
TC 7

DGN File:L:\Standard Drawings\Imperial\2017 Approved\1-All Drawings\TC07.dgn
28-NOV-2016

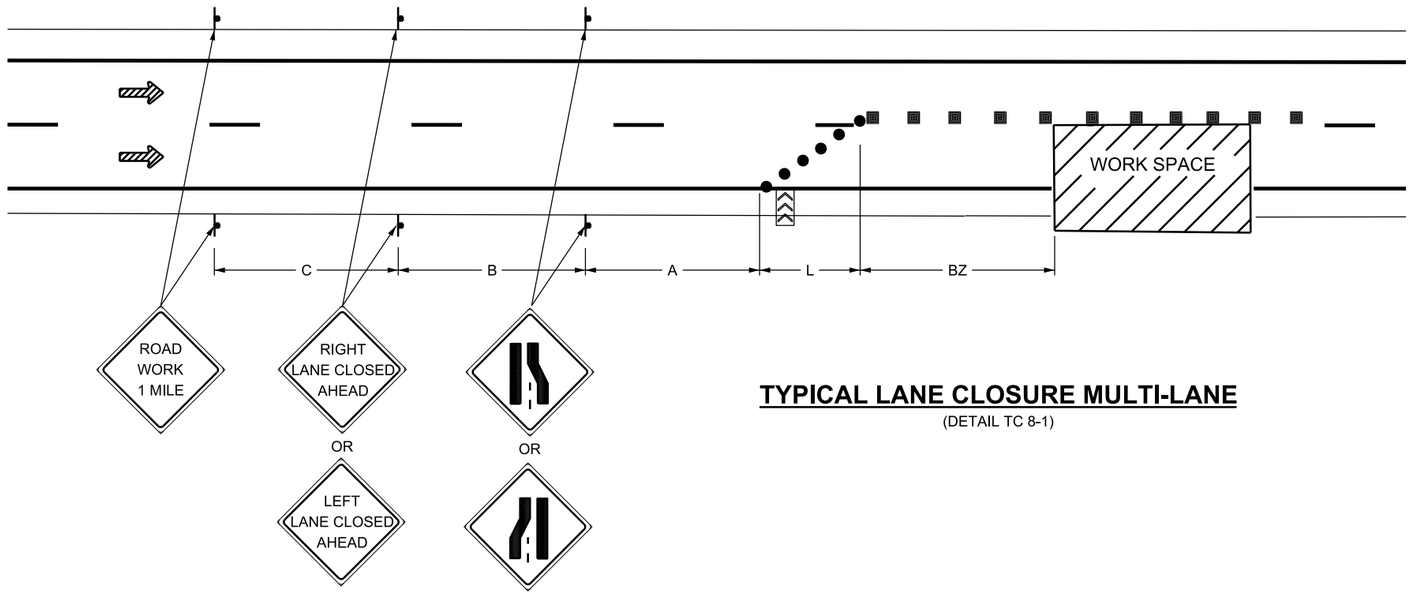

TYPICAL LANE CLOSURE MULTI-LANE

(DETAIL TC 8-1)

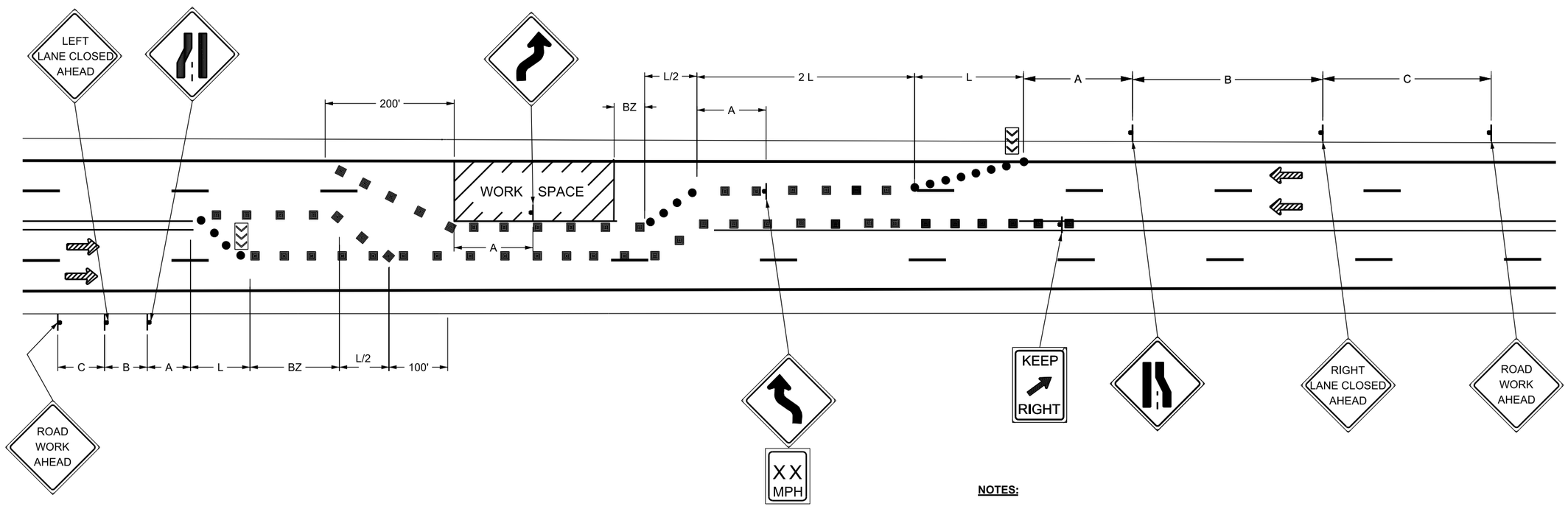

HALF OF ROADWAY CLOSED MULTI-LANE UNDIVIDED

(DETAIL TC 8-2)

NOTES:

1. SEE STD DWG TC 4A FOR TAPER, BUFFER ZONE & SIGN SPACING CHART AND TRAFFIC CONTROL DEVICE LEGEND.
2. USE APPROPRIATE SIGN SERIES (W1-3, W1-4, OR W24-1 SERIES) BASED UPON THE UPSTREAM SPEED LIMIT AND TANGENT DISTANCES BETWEEN CURVES.

REVISIONS

NO.	DATE	APPR.	REMARKS

UTAH DEPARTMENT OF TRANSPORTATION
STANDARD DRAWINGS FOR ROAD AND BRIDGE CONSTRUCTION
SALT LAKE CITY, UTAH

RECOMMENDED FOR APPROVAL — JAN.01.2017 DATE
CHAIRMAN STANDARDS COMMITTEE APPROVED — JAN.01.2017 DATE
DEPUTY DIRECTOR

TRAFFIC CONTROL LANE CLOSURE

STANDARD DRAWING TITLE

STD. DWG. NO.
TC 8

DGN File:L:\Standard Drawings\Imperial\2017 Approved\1-All Drawings\TC08.dgn
28-NOV-2016

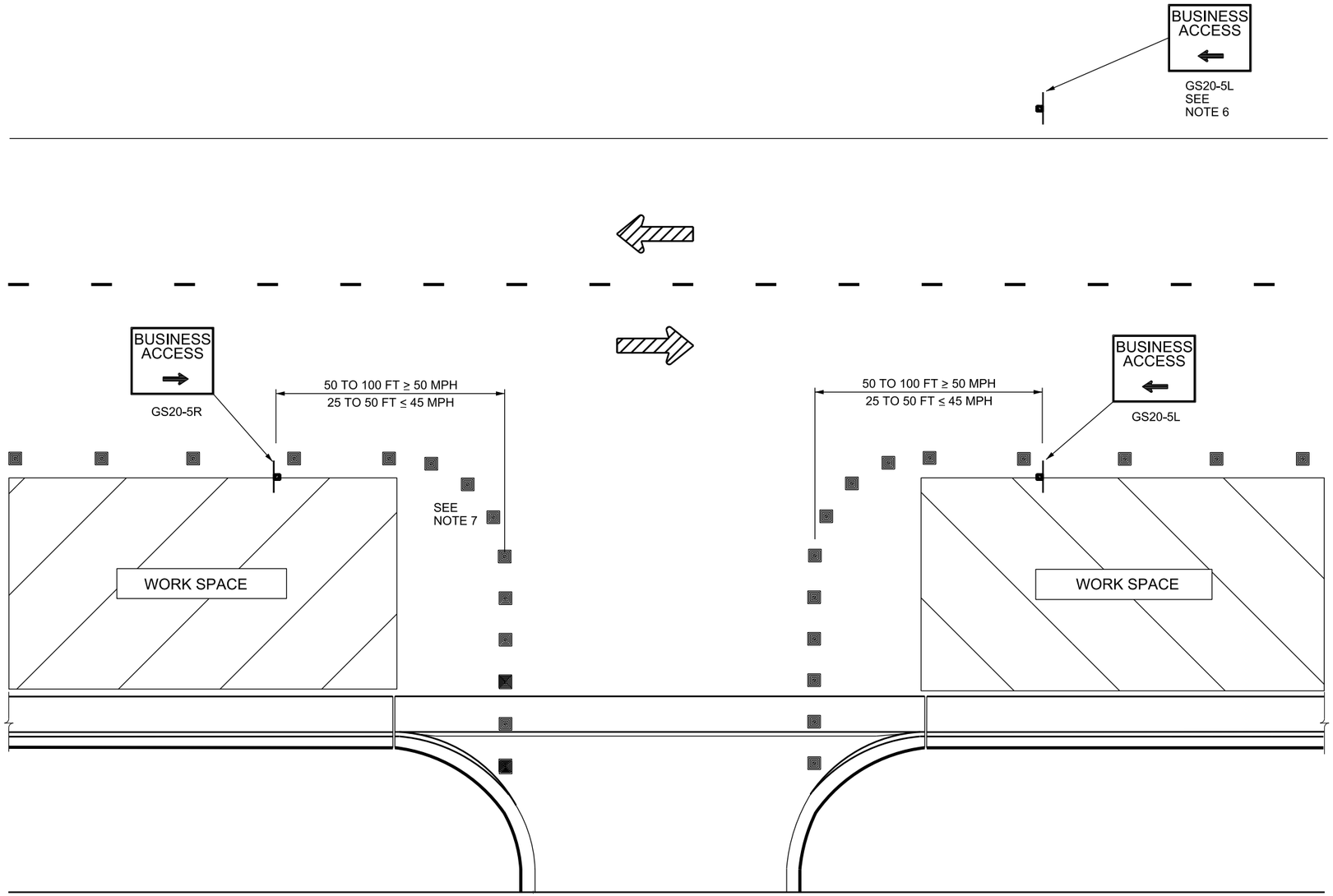

TYPICAL BUSINESS ACCESS PLAN

EXAMPLE ONLY - NOT TO SCALE
SETUP TO BE SITE SPECIFIC

NOTES:

1. USE TO DEFINE BUSINESS ACCESS WITHIN WORK ZONES.
2. USE 5 FT MINIMUM MOUNTING HEIGHT.
3. USE JOINT ACCESS WHERE PRACTICAL.
4. CONSIDER USING DIFFERENT CHANNELIZING DEVICES TO HIGHLIGHT ACCESS (USE VERTICAL PANELS ALONG ROADWAY AND BARRELS WITHIN ACCESS LIMITS, FOR EXAMPLE).
5. REFER TO STD DWG TC 4A FOR TRAFFIC CONTROL DEVICE LEGEND.
6. CONSIDER USE OF RIGHT SIDE GS20-5 SIGN WHEN REQUIRED BUSINESS ACCESS SIGN IS OBSCURED BY WORK ZONE ACTIVITIES OR OPPOSING TRAFFIC.
7. USE 10 FT MAXIMUM SPACING BETWEEN DEVICES IN DRIVEWAY.
8. REFER TO TC 4D SERIES STD DWGS FOR DESIGN OF GS20-5 BUSINESS ACCESS SIGN.
9. DO NOT PLACE BUSINESS NAME, LOGO OR OTHER ADVERTISEMENT ON OR UNDER GS20-5 SIGNS. SEE STD DWG TC 1 NOTE 23.

REVISIONS

NO.	DATE	APPR.	REMARKS

UTAH DEPARTMENT OF TRANSPORTATION
STANDARD DRAWINGS FOR ROAD AND BRIDGE CONSTRUCTION
SALT LAKE CITY, UTAH

RECOMMENDED FOR APPROVAL — JAN.01.2017 DATE
CHAIRMAN STANDARDS COMMITTEE APPROVED — JAN.01.2017 DATE
DEPUTY DIRECTOR

WORK ZONE
BUSINESS ACCESS
SIGNING

STANDARD DRAWING TITLE

STD. DWG. NO.
TC 9

DGN File:L:\Standard Drawings\Imperial\2017 Approved\1-All Drawings\TC09.dgn
28-NOV-2016

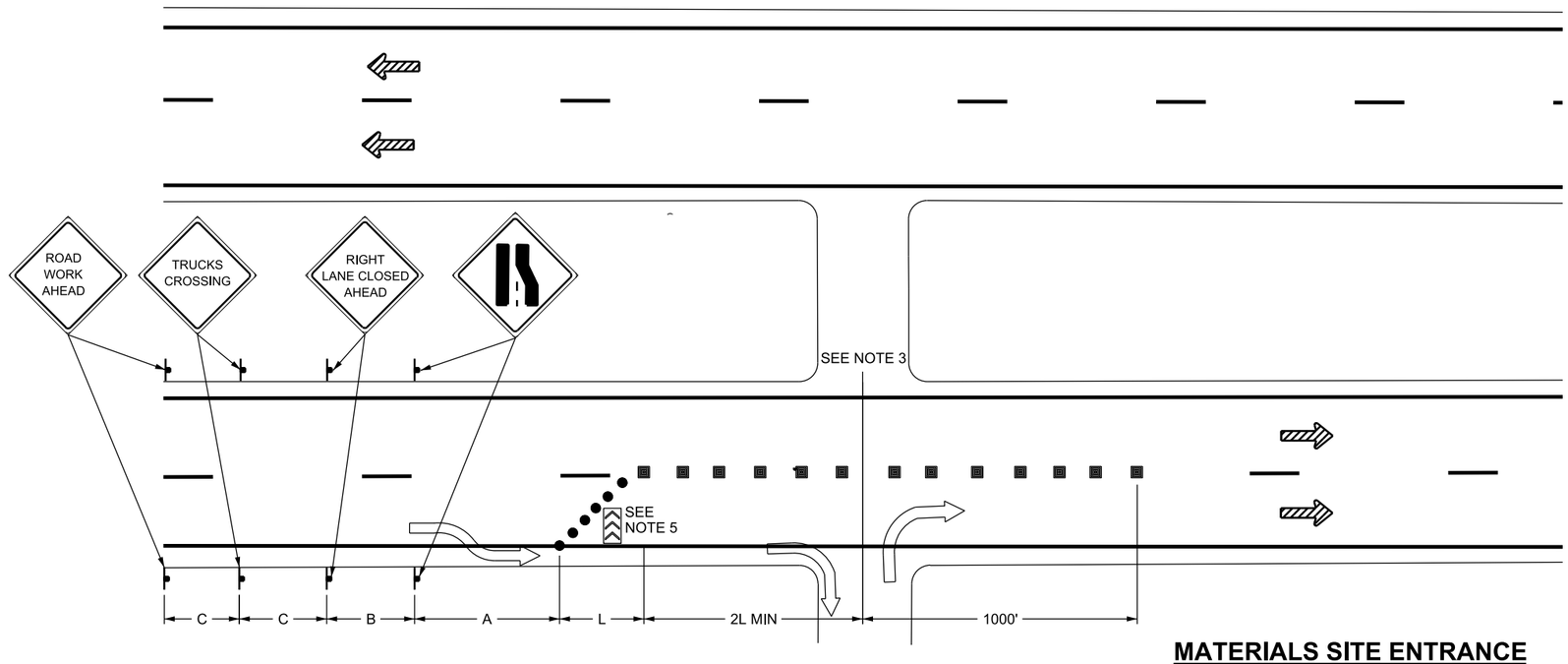

MATERIALS SITE ENTRANCE

(DETAIL TC 10-1)

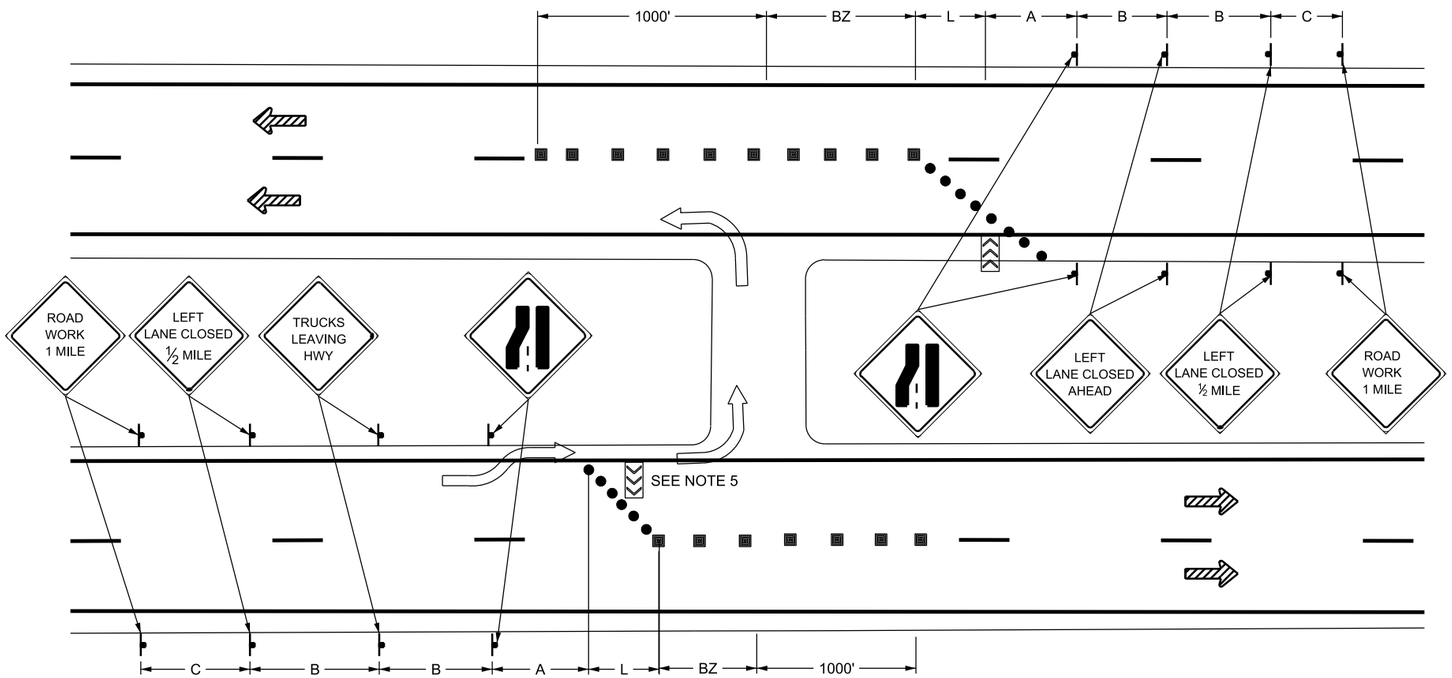

MEDIAN CROSSING

(DETAIL TC 10-2)

LEDGEND

TRUCK TRAFFIC MOVEMENT

NOTES:

1. USE A MINIMUM OF THREE MILES BETWEEN TEMPORARY MEDIAN CROSSOVERS.
2. DO NOT USE A CROSSOVER WHEN AN INTERCHANGE IS WITHIN 4 MILES OF THE PROJECT, EXCEPT AS APPROVED BY THE ENGINEER.
3. CONSTRUCTION TRAFFIC CROSSING ACTIVE LANES HAS THE RESPONSIBILITY TO STOP OR YIELD TO THROUGH TRAFFIC. USE ONLY IF ADEQUATE SIGHT DISTANCE IS AVAILABLE.
4. SEE STD DWG TC 4A FOR TAPER, BUFFER ZONE & SIGN SPACING CHART AND TRAFFIC CONTROL DEVICE LEGEND.
5. PLACE ADVANCE WARNING ARROW PANEL IN FIRST THIRD OF TAPER IN TRAFFIC LANE WHEN EXITING VEHICLES ARE USING THE SHOULDER.
6. PLACE TYPE 3 BARRICADES WITH ROAD CLOSED (R11-2) SIGNS ACROSS AN EXCLUSIVE USE HAUL ROAD WHEN IT IS NOT IN USE.

REVISIONS

NO.	DATE	APPR.	REMARKS

UTAH DEPARTMENT OF TRANSPORTATION
STANDARD DRAWINGS FOR ROAD AND BRIDGE CONSTRUCTION
SALT LAKE CITY, UTAH

RECOMMENDED FOR APPROVAL — JAN. 01, 2017 DATE
CHAIRMAN STANDARDS COMMITTEE
APPROVED — JAN. 01, 2017 DATE
DEPUTY DIRECTOR

TRAFFIC CONTROL EXPRESSWAY AND FREEWAY CROSSOVER/ TURN AROUND

STANDARD DRAWING TITLE

STD. DWG. NO.
TC 10

DGN File: L:\Standard Drawings\Imperial\2017 Approved\1-All Drawings\TC10.dgn
28-NOV-2016

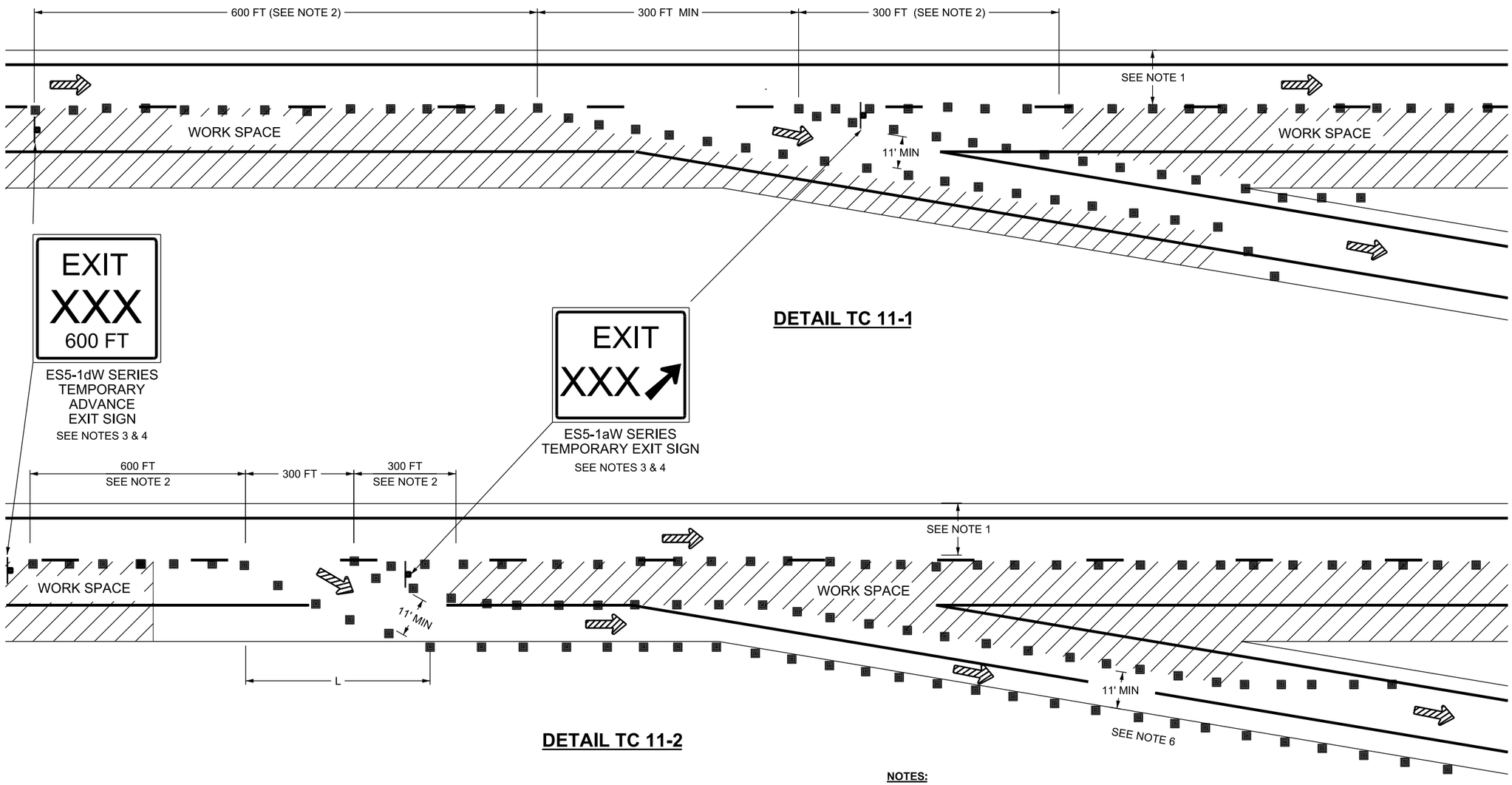

DETAIL TC 11-1

DETAIL TC 11-2

NOTES:

1. MAINTAIN 12 FT TRAVEL LANE AND 2 FT SHOULDER WIDTHS.
2. USE CHANNELIZING DEVICES SPACED AT 50 FT.
3. SEE TC 4D SERIES STD DWGS FOR SIGN DESIGN AND LAYOUT.
4. THE EXIT RAMP SIGNS ARE SUPPLEMENTAL TO ADVANCE GUIDE SIGNS AND THE EXIT DIRECTION GUIDE SIGN. PLACE SIGN AT POINT OF GORE WHERE A 10 FT WIDTH EXISTS BETWEEN TRAFFIC FACE OF BARREL TO TRAFFIC FACE OF BARREL.
5. MAINTAIN EXISTING INTERCHANGE GUIDE SIGNS DURING WORK ACTIVITIES, OR PROVIDE TEMPORARY INTERCHANGE GUIDE SIGNS CONSISTING OF A MINIMUM OF ONE ADVANCE GUIDE SIGN AND THE EXIT DIRECTION GUIDE SIGN. DESIGN TEMPORARY SIGNS TO THE SAME STANDARDS AS EXISTING SIGNS EXCEPT WITH A BLACK LEGEND ON A FLUORESCENT ORANGE OR AN ORANGE BACKGROUND.
6. CHANNELIZING DEVICES NOT REQUIRED FOR RAMP RIGHT SHOULDER WHEN AVAILABLE PAVEMENT WIDTH IS GREATER THAN 13 FT (11 FT TRAVEL LANE AND 2 FT SHOULDER).
7. SEE STD DWG TC 4A FOR TAPER, BUFFER ZONE & SIGN SPACING CHART AND TRAFFIC CONTROL DEVICE LEGEND.
8. PLACE A TEMPORARY EXIT (E5-1a) SIGN IN THE TEMPORARY GORE IF THE PERMANENT EXIT SIGN IS REMOVED OR IF THE TEMPORARY GORE IS MOVED MORE THEN 200 FT UP STREAM OR IF THE TEMPORARY GORE IS MOVED DOWN STREAM FROM PERMANENT EXIT SIGN LOCATION. MOUNT THE TEMPORARY EXIT SIGN A MINIMUM OF 7 FT FROM THE PAVEMENT SURFACE TO THE BOTTOM OF THE SIGN.

NO.	DATE	APPR.	REMARKS

REVISIONS

UTAH DEPARTMENT OF TRANSPORTATION
STANDARD DRAWINGS FOR ROAD AND BRIDGE CONSTRUCTION
SALT LAKE CITY, UTAH

RECOMMENDED FOR APPROVAL — JAN. 01, 2017 DATE
CHAIRMAN STANDARDS COMMITTEE APPROVED — JAN. 01, 2017 DATE
DEPUTY DIRECTOR

STANDARD DRAWING TITLE
TRAFFIC CONTROL
EXIT RAMP GORE

STD. DWG. NO.
TC 11

DGN File:L:\Standard Drawings\Imperial\2017 Approved\1-All Drawings\TC11.dgn
28-NOV-2016

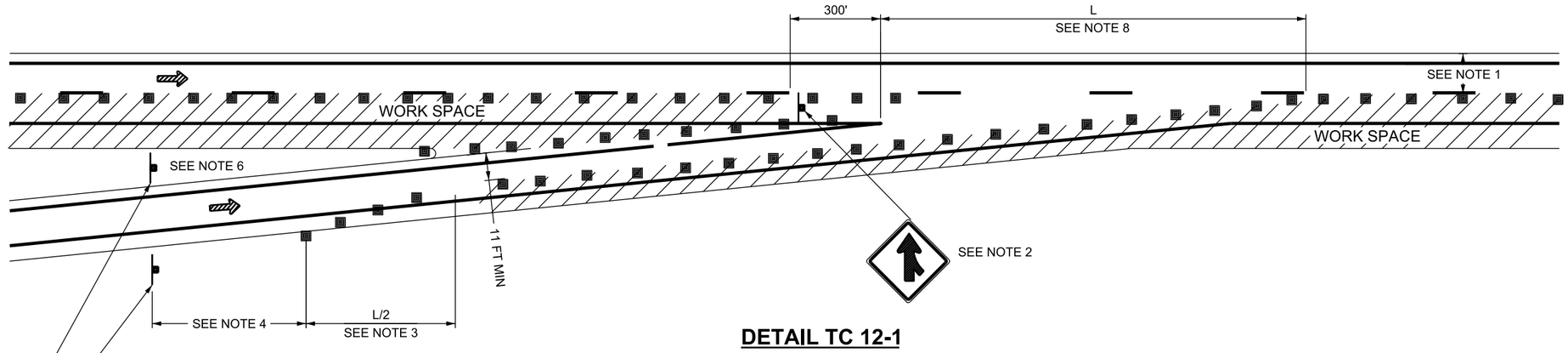

DETAIL TC 12-1

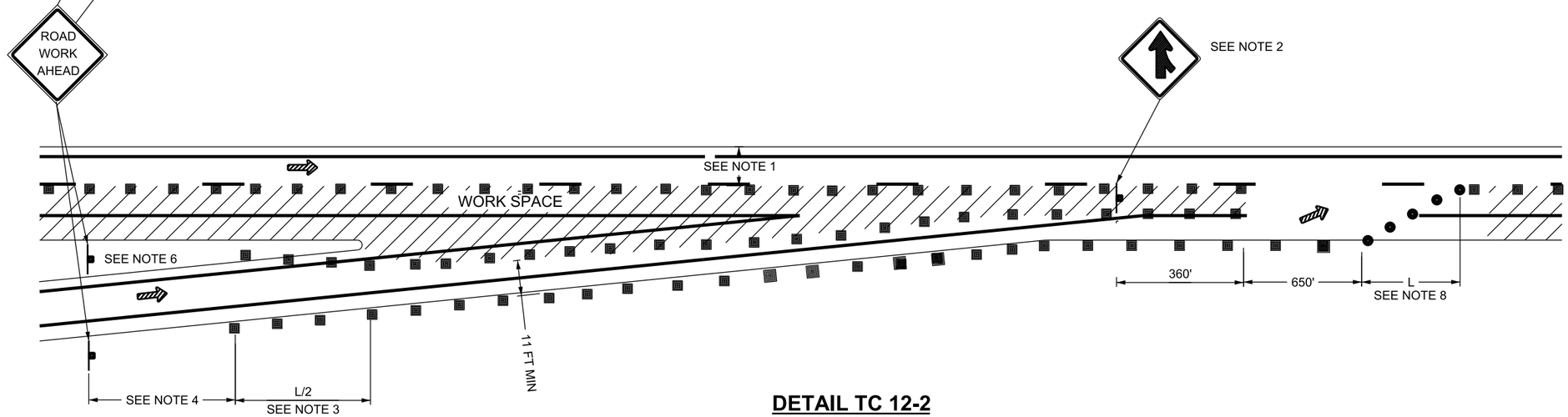

DETAIL TC 12-2

SEE NOTE 5

NOTES:

1. MAINTAIN 12 FT TRAVEL LANE AND 2 FT OUTSIDE SHOULDER WIDTHS.
2. USE SUPPLEMENTAL MERGE SIGN ON ENTRANCE RAMP WHEN WORK SPACE IS WIDER THAN 12 FT OR WORK REMOVES OR OBSCURES MAINLINE MERGE SIGN. PLACE SIGN AT POINT OF GORE WHERE A 10 FT WIDTH EXISTS BETWEEN TRAFFIC FACE OF BARREL TO TRAFFIC FACE OF BARREL.
3. USE 40 MPH SPEED FOR RAMP TRAFFIC CONTROL DESIGN UNLESS POSTED OR ADVISORY SPEED IS GREATER, IN WHICH CASE USE THE HIGHEST SPEED.
4. RAMP ADVANCED WARNING SIGN DISTANCE
   250 FT SPEED = 40 MPH
   500 FT SPEED ≥ 45 MPH
5. CHANNELIZING DEVICES NOT REQUIRED ON RAMP RIGHT SHOULDER WHEN AVAILABLE PAVEMENT WIDTH IS GREATER THAN 13 FT (11 FT TRAVEL LANE AND 2 FT SHOULDER).
6. USE SUPPLEMENTAL LEFT SIDE SIGNING FOR MULTI-LANE RAMPS.
7. SEE STD DWG TC 4A FOR TAPER, BUFFER ZONE & SIGN SPACING CHART AND TRAFFIC CONTROL DEVICE LEGEND.
8. USE PRE CONSTRUCTION POSTED MAIN LINE SPEED LIMIT FOR "L".

NO.	DATE	APPR.	REMARKS

REVISIONS

UTAH DEPARTMENT OF TRANSPORTATION
STANDARD DRAWINGS FOR ROAD AND BRIDGE CONSTRUCTION
SALT LAKE CITY, UTAH

RECOMMENDED FOR APPROVAL — JAN. 01, 2017 DATE

CHAIRMAN STANDARDS COMMITTEE APPROVED — JAN. 01, 2017 DATE

DEPUTY DIRECTOR

TRAFFIC CONTROL
ENTRANCE RAMP GORE

STANDARD DRAWING TITLE

STD. DWG. NO.
TC 12

DGN File:L:\Standard Drawings\Imperial\2017 Approved\1-All Drawings\TC12.dgn
28-NOV-2016

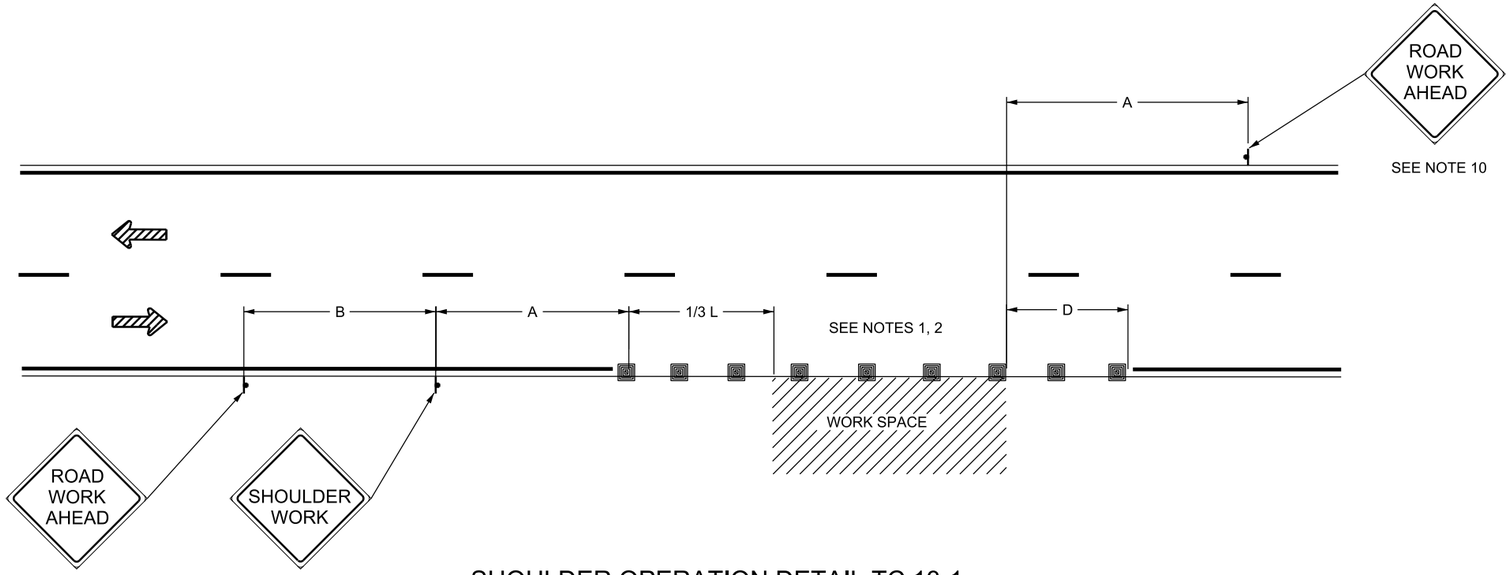

SHOULDER OPERATION DETAIL TC 13-1

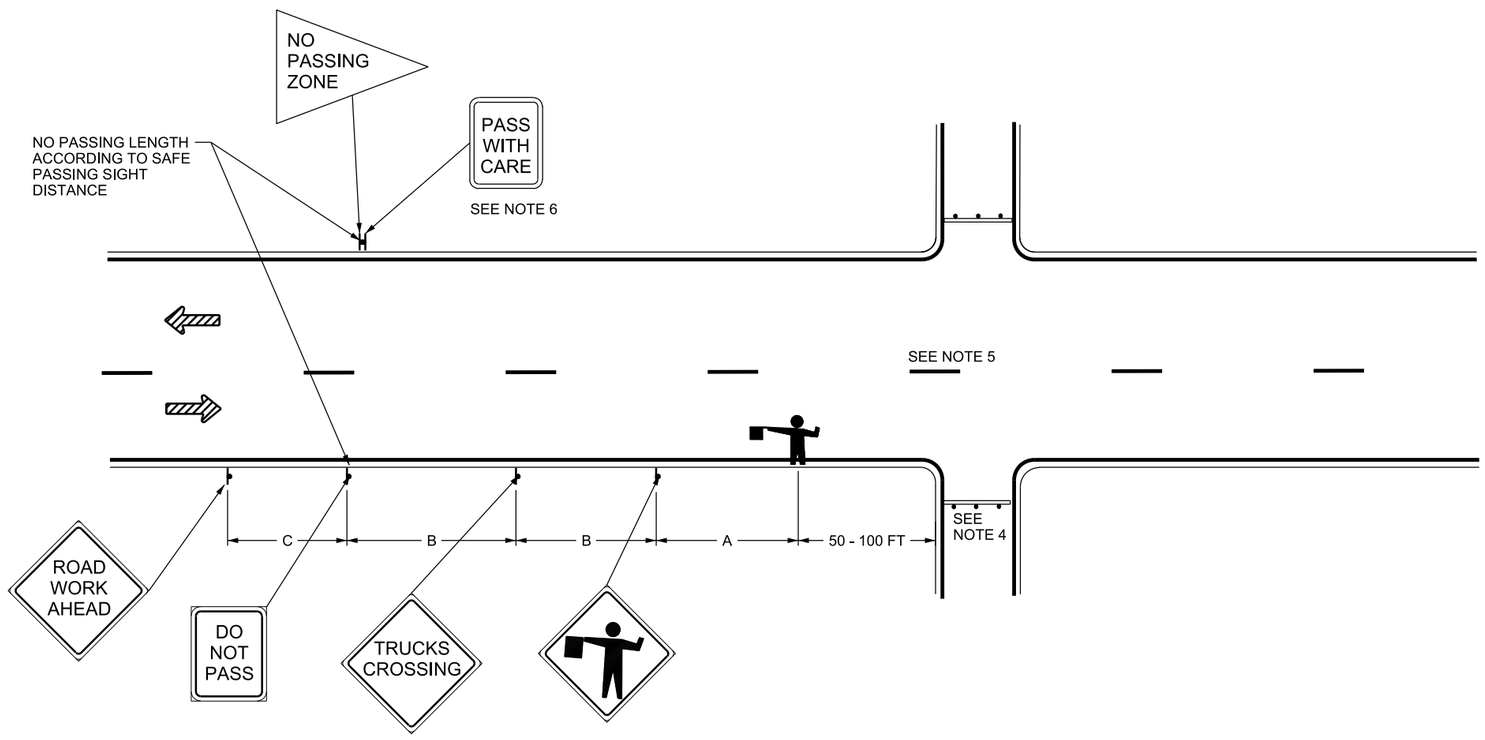

HAUL ROAD OPERATION-TWO WAY DETAIL TC 13-2

SEE NOTES 8 & 9

NOTES:

1. USE CHANNELIZING DEVICES AS PER TC 3 SERIES STD DWGS TO SEPARATE WORK ZONE FROM TRAVEL LANE WHEN WORK DURATION EXCEEDS 1 HOUR.
2. DO NOT ENCROACH INTO LANES.
3. SEE STD DWG TC 4A FOR TAPER, BUFFER ZONE & SIGN SPACING CHART AND TRAFFIC CONTROL DEVICE LEGEND.
4. INSTALL TYPE 3 BARRICADES WHEN HAUL ROAD IS NOT IN USE.
5. APPLY DOUBLE YELLOW STRIPING BETWEEN NO PASSING ZONE SIGNS.
6. PLACE "PASS WITH CARE" (R4-2) SIGN ONLY IF PASSING IS ALLOWED DOWNSTREAM OF WORK ZONE.
7. SEE STD DWG TC 4C FOR PROJECT LIMIT SIGNING.
8. USE TWO FLAGGING STATIONS EACH DIRECTION AND SIGNS ON BOTH SIDES OF ROADWAY FOR MULTILANE DIVIDED HIGHWAYS AND MULTILANE ONE-WAY STREETS.
9. USE SAME SIGN SEQUENCE AND SPACING FOR OPPOSITE DIRECTION OF TRAFFIC.
10. REQUIRED ONLY ON TWO WAY OPERATION.

REVISIONS

NO.	DATE	APPR.	REMARKS

UTAH DEPARTMENT OF TRANSPORTATION
STANDARD DRAWINGS FOR ROAD AND BRIDGE CONSTRUCTION
SALT LAKE CITY, UTAH

RECOMMENDED FOR APPROVAL — JAN.01.2017 DATE
CHAIRMAN STANDARDS COMMITTEE APPROVED — JAN.01.2017 DATE
DEPUTY DIRECTOR

STANDARD DRAWING TITLE
TRAFFIC CONTROL
SHOULDER HAUL ROAD

STD. DWG. NO.
TC 13

DGN File:L:\Standard Drawings\Imperial\2017 Approved\1-All Drawings\TC13.dgn
28-NOV-2016

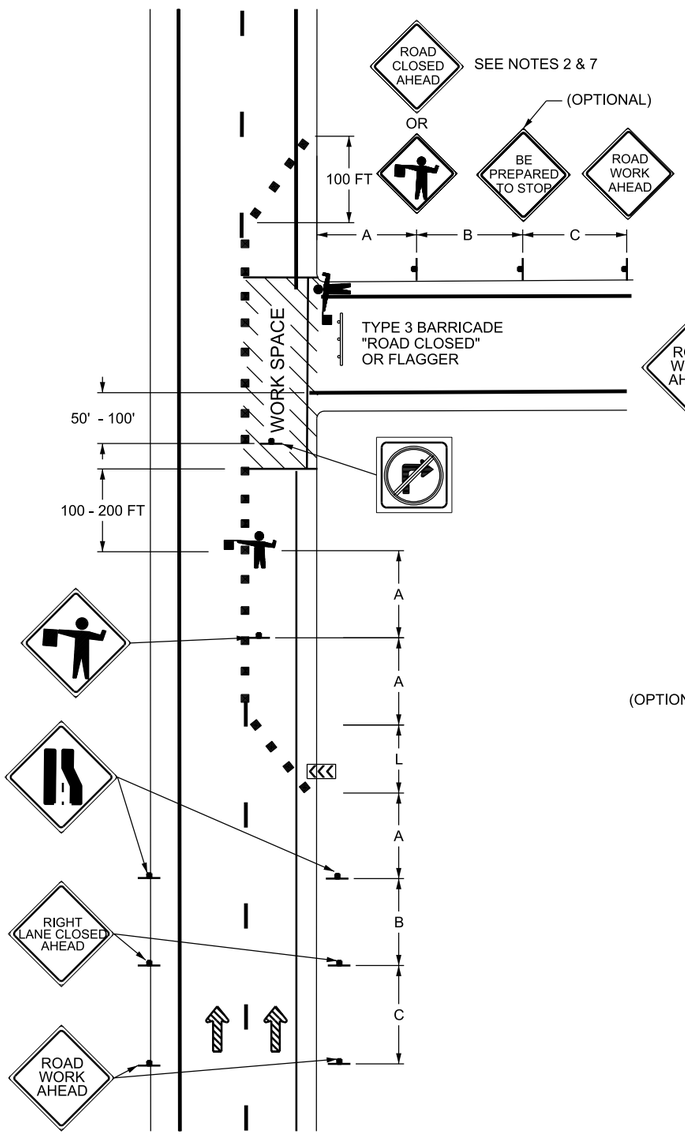

FLAGGING OPERATION - ONE WAY WITH POTENTIAL ENCROACHMENT BY WORK VEHICLE DETAIL TC 14-1

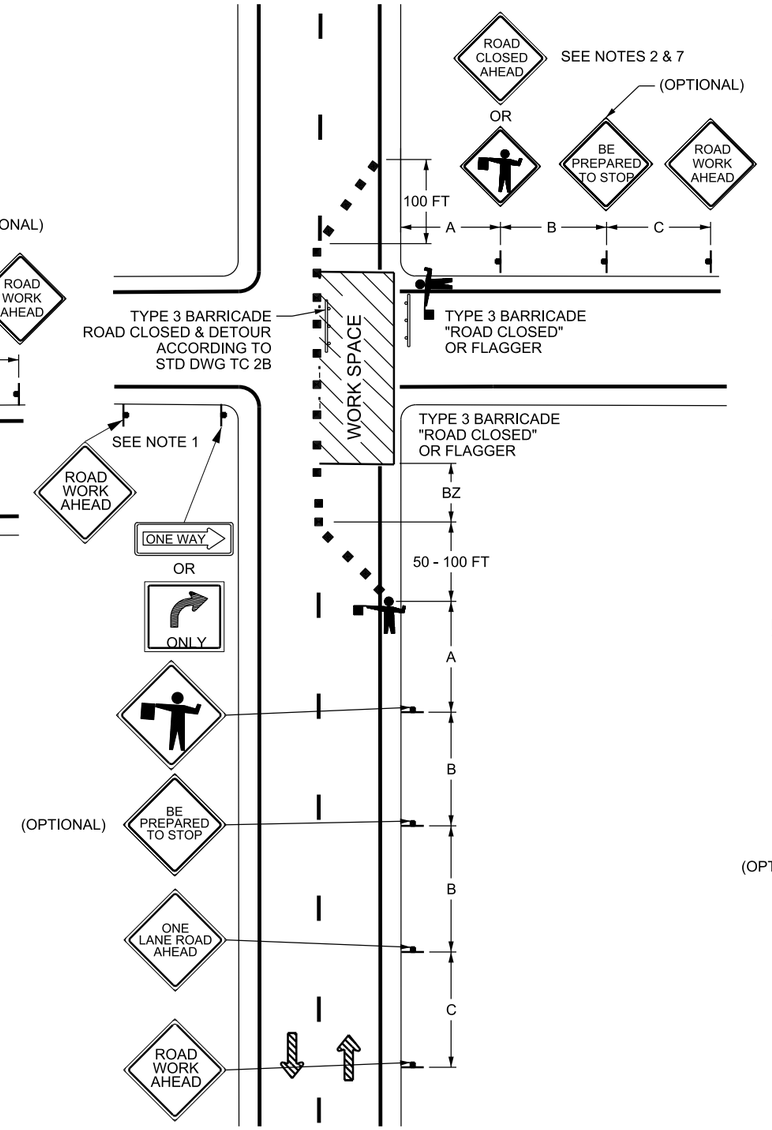

FLAGGING OPERATION - ONE-LANE, TWO-WAY TRAFFIC DETAIL TC 14-2

SEE NOTE 6

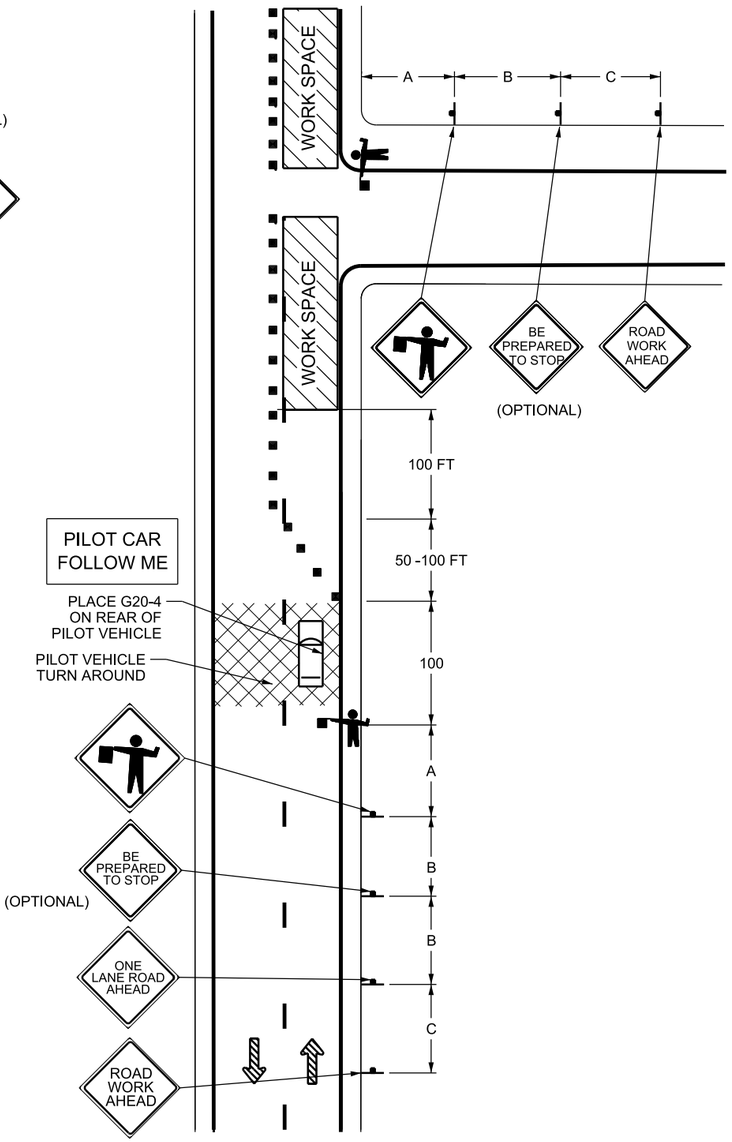

FLAGGING OPERATIONS WITH USE OF PILOT VEHICLE DETAIL TC 14-3

SEE NOTE 6

NOTES:

1. USE A FLAGGER AT ALL INTERSECTING ROADWAYS. REFER TO STANDARD SPECIFICATION 01554 FOR REQUIREMENT AT OPERATING TRAFFIC SIGNALS.
2. PROVIDE FLAGGING IF TURNING TRAFFIC CONFLICTS WITH ONE-WAY TRAFFIC.
3. PROVIDE A DETOUR WHEN ROAD CLOSURE EXCEEDS 24 HOURS.
4. SEE STD DWG TC 4A FOR TAPER, BUFFER ZONE AND SIGN SPACING CHART AND TRAFFIC CONTROL DEVICE LEGEND.
5. SEE STD DWG TC 4C FOR PROJECT LIMIT SIGNING.
6. USE SAME SIGN SEQUENCE, SPACING, AND FLAGGER FOR OPPOSITE DIRECTION OF TRAFFIC.
7. USE ADVANCED ROAD CLOSURE SIGNING IF ROAD CLOSED AHEAD SIGN IS USED.
8. REDUCE MULTILANE SECTION TO 1 LANE PRIOR TO FLAGGING OPERATION.

REVISIONS

NO.	DATE	APPR.	REMARKS

UTAH DEPARTMENT OF TRANSPORTATION
STANDARD DRAWINGS FOR ROAD AND BRIDGE CONSTRUCTION
SALT LAKE CITY, UTAH

RECOMMENDED FOR APPROVAL — JAN. 01, 2017 DATE
CHAIRMAN STANDARDS COMMITTEE APPROVED — JAN. 01, 2017 DATE
DEPUTY DIRECTOR

STANDARD DRAWING TITLE
TRAFFIC CONTROL FLAGGING OPERATION

STD. DWG. NO.
TC 14A

DGN File: L:\Standard Drawings\Imperial\2017 Approved\1-All Drawings\TC14A.dgn
28-NOV-2016

TAPER, BUFFER ZONE & SIGN SPACING CHART

ROAD TYPE	POSTED SPEED MPH (S)	LENGTH OF BUFFER(BZ)	MINIMUM SIGN SPACING (SS)				ONE LANE TWO-WAY FLAGGING
			A	B	C	D	TAPER LENGTH
			FT	FT	FT	FT	FT
CONVENTIONAL	50	425	500			250	100
	55	495					
	60	570					
	65	645					

CHANNELIZING DEVICES

A) SHOULDER, ONE-LANE TWO-WAY, AND DOWNSTREAM TAPERS: USE A MINIMUM OF 1 DEVICE PER 3 FT OF WIDTH (OR PORTION THEREOF), PLUS 1 ADDITONAL DEVICE TO START.

B) ON TANGENT: S x 2 = SPACING UP TO 120 FT MAXIMUM.

C) LENGTH OF BUFFER ZONE (BZ) IS THE DISTANCE FROM END OF LANE CLOSURE TAPER TO WORK SPACE, OR ANY OBSTRUCTION PRIOR TO WORK SPACE.

TRAFFIC CONTROL DEVICE LEGEND

- SIGN (FIXED OR PORTABLE)
- CHANNELIZING DEVICE (SEE STD DWG TC 2A)
- DRUMS OR DIRECTIONAL INDICATOR BARRICADE
- FLAGGING STATION
- DIRECTION OF TRAFFIC
- PILOT CAR

SEE STD DWG TC 4C FOR PROJECT LIMIT SIGNING

REDUCED SPEED SIGNING FOR PILOT CAR OPERATION IN A WORK ZONE (CONVENTIONAL ROADS ONLY)

SIGNING SIMILAR FOR OPPOSITE DIRECTION OF TRAVEL

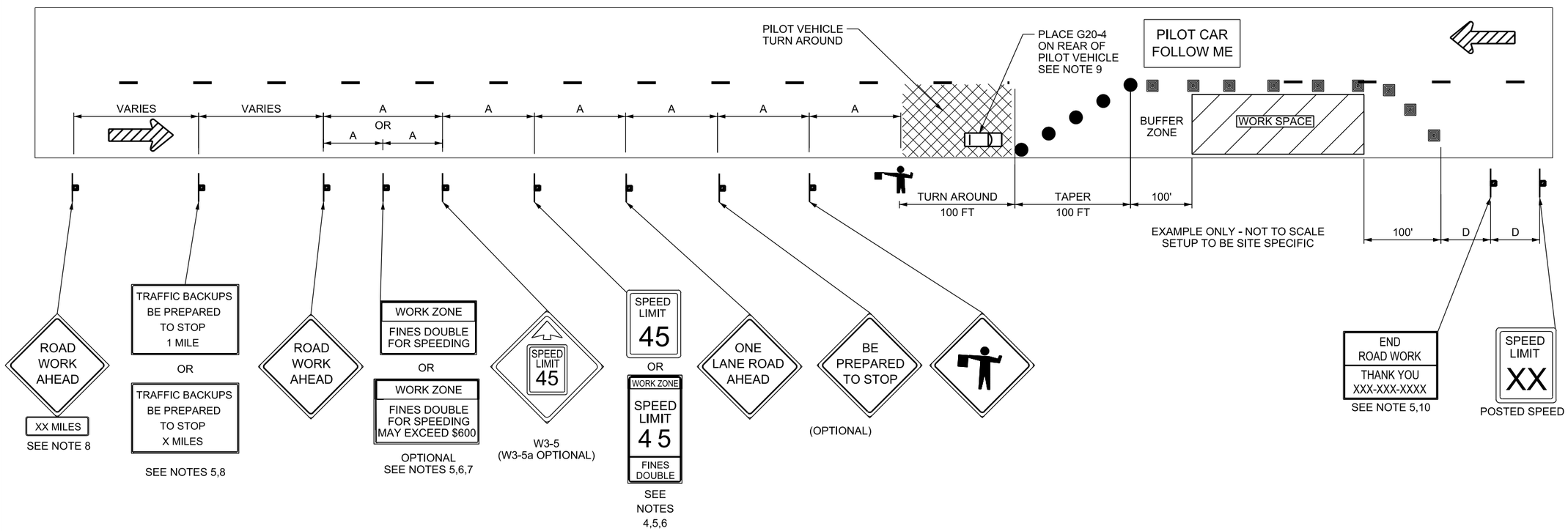

NOTES:

1. MAY BE USED WITH A PILOT CAR OPERATION ON A CONVENTIONAL ROAD WITH THE APPROVAL OF THE REGION TRAFFIC ENGINEER.
2. USE THE PRE-CONSTRUCTION POSTED SPEED LIMIT BEFORE THE WORK ZONE TO COMPUTE THE SIGN SPACING, TAPER LENGTH, BUFFER ZONE, AND WORK CLEAR ZONE DISTANCE. USE THE POSTED SPEED LIMIT DURING WORK TO DETERMINE THE TANGENT SPACING FOR CHANNELIZING DEVICES.
3. REMOVE OR COVER THE WORK ZONE REDUCED SPEED LIMIT SIGN (RS2-1a) AND THE WORK ZONE REDUCED SPEED LIMIT AHEAD (W3-5 SERIES) SIGNS WHEN PILOT CARS ARE NOT IN USE.
4. ADDITIONAL SIGNS MAY BE USED IN THE WORK ZONE FOR SUPPLEMENTAL NOTIFICATION OF THE WORK ZONE SPEED LIMITS.
5. SEE TC 4D SERIES STD DWGS FOR SIGN DESIGN AND LAYOUT.
6. FINES DOUBLE (RS2-6c) AND FINES DOUBLE WITH FINE NOTIFICATION (RS2-6d) SIGNS MAY BE USED INTERCHANGEABLY.
7. PLACE ADDITIONAL WORK ZONE SPEED LIMIT ASSEMBLIES (RS2-1a), FINES DOUBLE (RS2-6c), AND FINES DOUBLE WITH FINE NOTIFICATION (RS2-6d) SIGNS AS NEEDED AT ALL MAJOR INTERSECTIONS AND INTERCHANGES WITHIN THE PROJECT WHEN REDUCED SPEEDS AND THE FINES DOUBLE OR THE FINES DOUBLE WITH FINE NOTIFICATION SIGNING OPTION ARE USED.
8. USE TRAFFIC BACKUP SIGNING WHEN VEHICLE QUEUES ARE EXPECTED OR OCCUR IN ADVANCE OF THE INSTALLED WORK ZONE ADVANCE WARNING SIGNS. PLACE TRAFFIC BACKUPS BE PREPARED TO STOP 1 MILE (WS4-3a) SIGNS TWO MILES IN ADVANCE OF THE WORK AREA. PLACE TRAFFIC BACKUPS BE PREPARED TO STOP "X" MILES (WS4-3b) SIGNS IN INCREMENTS OF ONE MILE WITH THE APPROPRIATE "X" MILES LEGEND TO STAY AHEAD OF ANTICIPATED QUEUE OF VEHICLES. PLACE ADDITIONAL ROAD WORK AHEAD SIGNS WITH A "XX" MILES (W16-3aP) PLAQUE IN ADVANCE OF FURTHERMOST UPSTREAM TRAFFIC BACKUP SIGNING.
9. PILOT VEHICLE SPEED NOT TO EXCEED 40 MPH.
10. DO NOT USE END ROAD WORK SIGN WHEN PILOT CAR OPERATION TERMINATES WITHIN THE PROJECT LIMITS.
11. COVER PRE-CONSTRUCTION POSTED SPEED LIMIT SIGNS THAT ARE BETWEEN THE WORK ZONE REDUCED SPEED AHEAD SIGN (W3-5 SERIES) AND THE FLAGGING STATION.
12. USE ONLY ON HIGHWAYS WITH POSTED SPEEDS OF 50 MPH OR GREATER.

REVISIONS

NO.	DATE	APPR.	REMARKS

UTAH DEPARTMENT OF TRANSPORTATION
STANDARD DRAWINGS FOR ROAD AND BRIDGE CONSTRUCTION
SALT LAKE CITY, UTAH

RECOMMENDED FOR APPROVAL — JAN. 01, 2017 DATE
CHAIRMAN STANDARDS COMMITTEE APPROVED — JAN. 01, 2017 DATE
DEPUTY DIRECTOR

REDUCED SPEED SIGNING FOR PILOT CAR OPERATION (CONVENTIONAL ROADS)
STANDARD DRAWING TITLE

STD. DWG. NO.
TC 14B

DGN File: L:\Standard Drawings\Imperial\2017 Approved\1-All Drawings\TC14B.dgn
28-NOV-2016

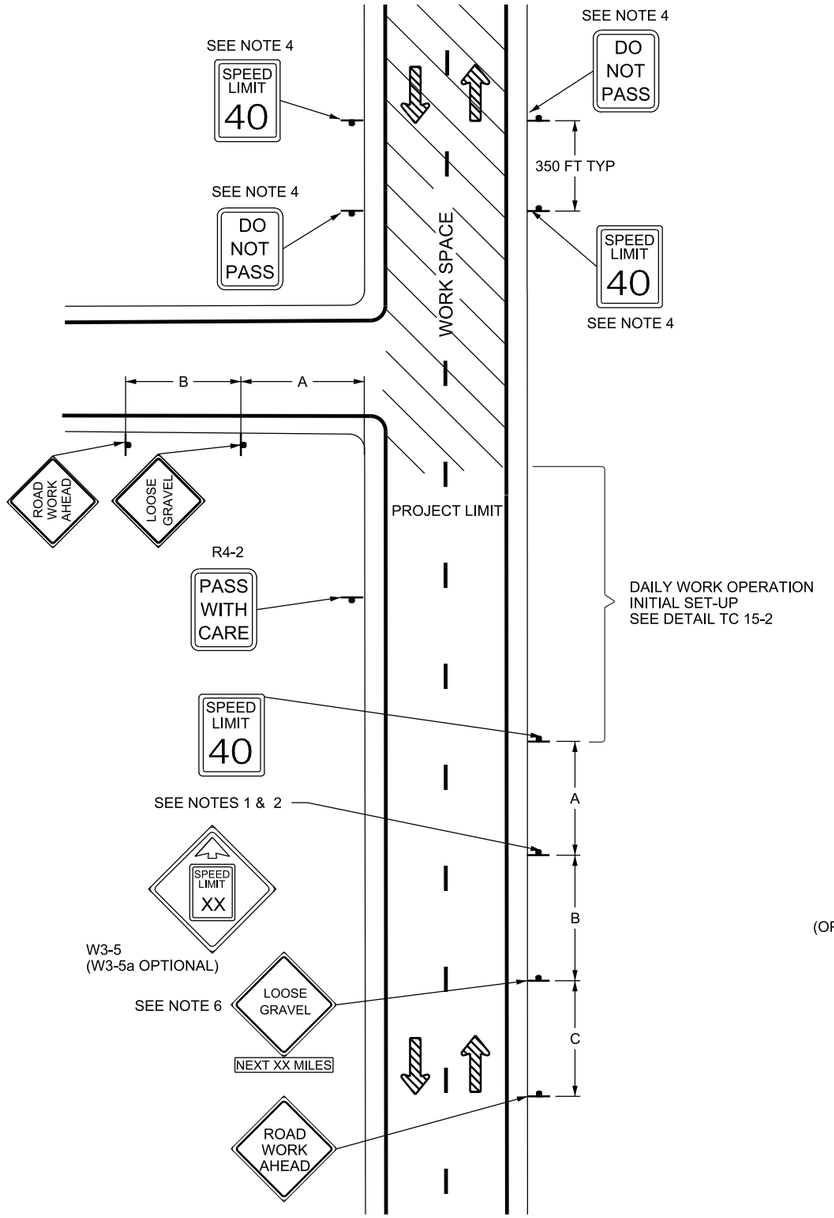

(DETAIL TC 15-1)

PROJECT SIGNING 2 LANE-2 WAY

SEE NOTE 13

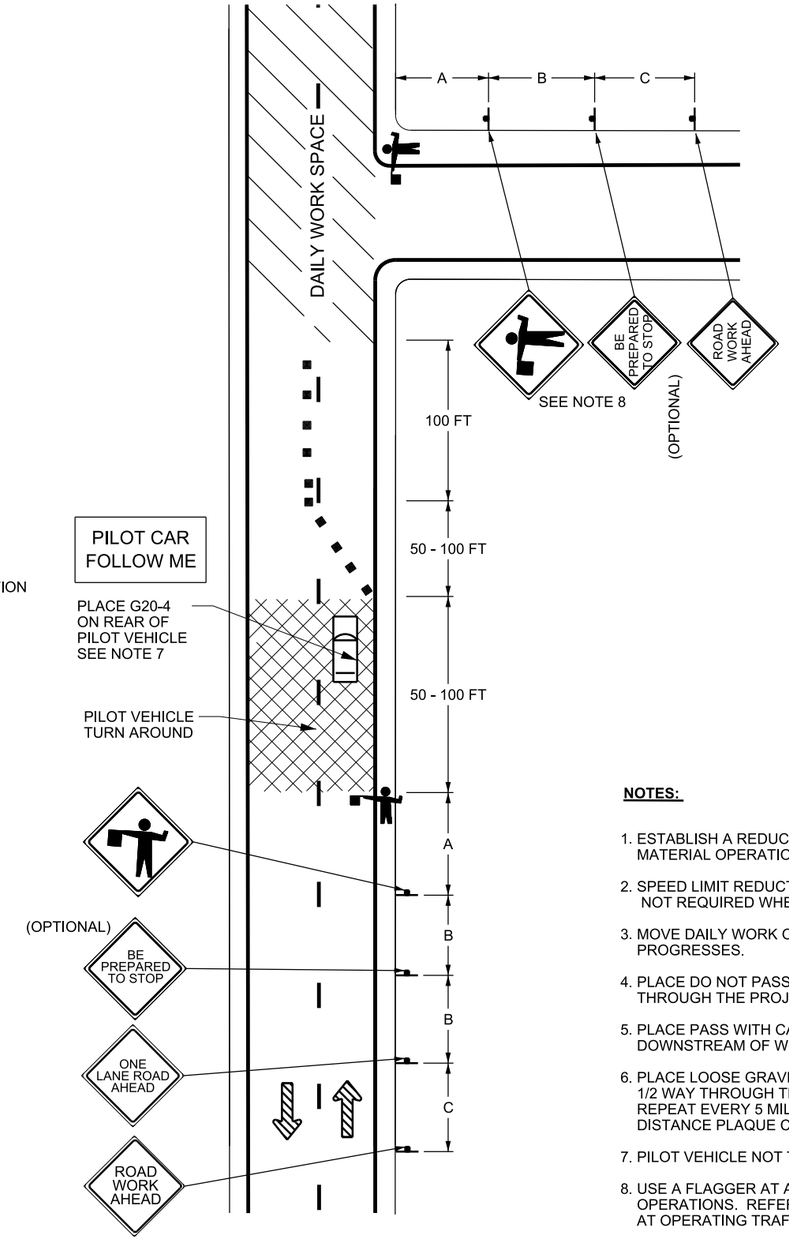

FLAGGING /PILOT VEHICLE OPERATION (DETAIL TC 15-2)

DAILY WORK OPERATION 2 LANE-2 WAY

SEE NOTE 13

NOTES:

1. ESTABLISH A REDUCED SPEED LIMIT OF 40 MPH FOR SEAL COAT AND COVER MATERIAL OPERATIONS WHEN SPEEDS ARE GREATER THAN 40 MPH.
2. SPEED LIMIT REDUCTION AHEAD (W3-5) AND SPEED LIMIT SIGNING NOT REQUIRED WHEN EXISTING SPEED LIMITS ARE 40 MPH OR LESS.
3. MOVE DAILY WORK OPERATION SIGNING, DETAIL TC 15-2, AS WORK PROGRESSES.
4. PLACE DO NOT PASS (R4-1) AND SPEED LIMIT SIGNS AT 1 MILE INTERVALS THROUGH THE PROJECT AND AFTER MAJOR INTERSECTIONS.
5. PLACE PASS WITH CARE (R4-2) SIGN ONLY IF PASSING IS ALLOWED DOWNSTREAM OF WORK ZONE.
6. PLACE LOOSE GRAVEL (W8-7) SIGN WITH APPROPRIATE DISTANCE MESSAGE 1/2 WAY THROUGH THE PROJECT IF PROJECT LENGTH IS LESS THAN 10 MILES. REPEAT EVERY 5 MILES ON LONGER PROJECTS WITH AN AUXILIARY DISTANCE PLAQUE COUNTING DOWN THE DISTANCE TO THE PROJECT LIMITS.
7. PILOT VEHICLE NOT TO EXCEED SPEED OF 40 MPH.
8. USE A FLAGGER AT ALL INTERSECTING ROADWAYS DURING DAILY WORK OPERATIONS. REFER TO STANDARD SPECIFICATION 01554 FOR REQUIREMENTS AT OPERATING TRAFFIC SIGNALS.
9. CONTINUE FLAGGING AND PILOT VEHICLE OPERATIONS UNTIL THE ENGINEER OR THEIR REPRESENTATIVE ALLOWS FREE FLOW TRAFFIC TO PROCEED.
10. SEE STD DWG TC 4A FOR TAPER, BUFFER ZONE & SIGN SPACING CHART AND TRAFFIC CONTROL DEVICE LEGEND.
11. SEE TC 4D SERIES STD DWGS FOR DESIGN AND LAYOUT OF FINES DOUBLE SIGN, FINES DOUBLE SIGN WITH FINE NOTIFICATION, AND FINES DOUBLE SPEED LIMIT ASSEMBLY IF REQUIRED.
12. SEE STD DWG TC 4C FOR PROJECT LIMIT SIGNING.
13. USE SAME SIGN SEQUENCE, SPACING AND FLAGGER FOR OPPOSITE DIRECTION OF TRAFFIC.

REVISIONS

NO.	DATE	APPR.	REMARKS

UTAH DEPARTMENT OF TRANSPORTATION
STANDARD DRAWINGS FOR ROAD AND BRIDGE CONSTRUCTION
SALT LAKE CITY, UTAH

RECOMMENDED FOR APPROVAL — JAN. 01, 2017 DATE
CHAIRMAN STANDARDS COMMITTEE APPROVED — JAN. 01, 2017 DATE
DEPUTY DIRECTOR

TRAFFIC CONTROL
2 LANE/2 WAY
SEAL COAT WITH
COVER MATERIAL

STANDARD DRAWING TITLE

STD. DWG. NO.
TC 15

DGN File:L:\Standard_Drawings\Imperial\2017 Approved\1-All Drawings\TC15.dgn
28-NOV-2016

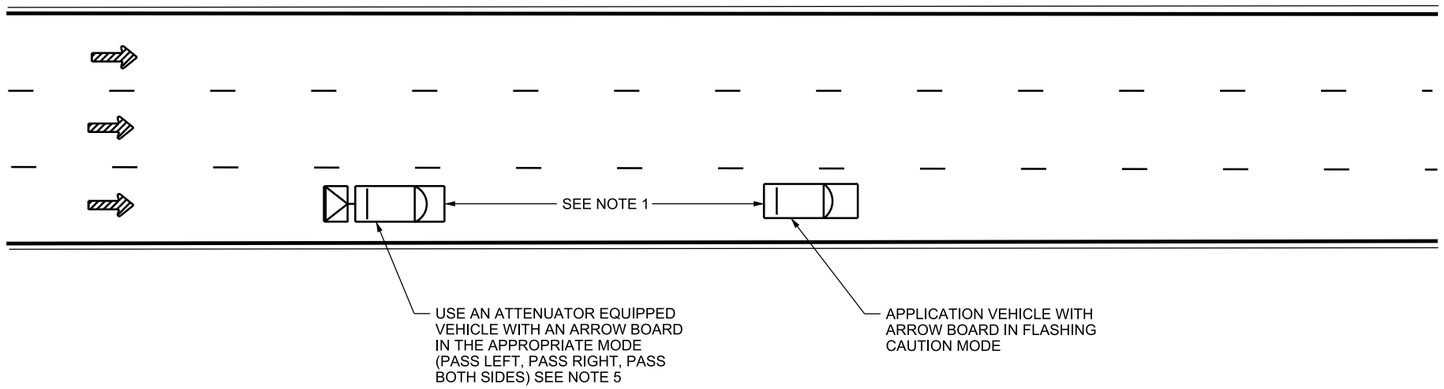

MULTILANE LANE LINES & SHOULDERS
DETAIL TC 16-1

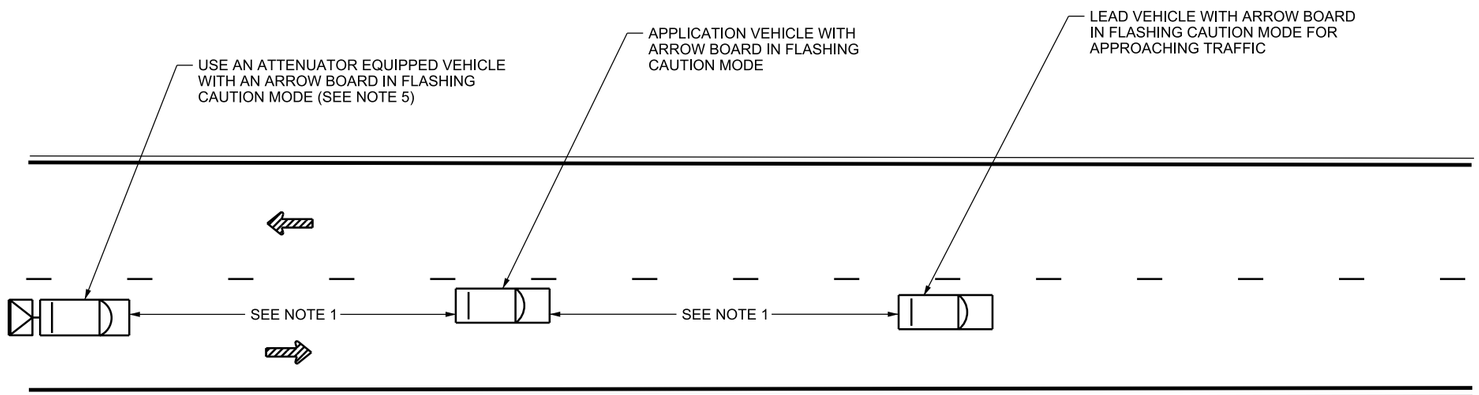

TWO LANE-TWO WAY CENTER & SHOULDERS
DETAIL TC 16-2

NOTES:

1. DO NOT EXCEED 300 FT SPACING BETWEEN THE APPLICATING TRUCK AND THE FOLLOW OR LEAD VEHICLE.
2. NO STATIC SIGNS ARE REQUIRED WITH THESE OPERATIONS.
3. USE ROTARY STROBE LIGHTS AND EMERGENCY FLASHERS ON ALL EQUIPMENT IN OPERATION.
4. USE TYPE B ARROW BOARD. SEE STD DWG TC 2C.
5. USE MASH OR NCHRP-350 APPROVED TRUCK MOUNTED ATTENUATOR (TMA) MEETING THE REQUIREMENTS FOR THE POSTED SPEED LIMIT.

   TL-2 RATED SYSTEM FOR SPEEDS 45 ≤ MPH,
   TL-3 RATED SYSTEM FOR SPEEDS 50 ≥ MPH.
6. SEE STD DWG TC 4A FOR TRAFFIC CONTROL DEVICE LEGEND.

REVISIONS

NO.	DATE	APPR.	REMARKS

UTAH DEPARTMENT OF TRANSPORTATION
STANDARD DRAWINGS FOR ROAD AND BRIDGE CONSTRUCTION
SALT LAKE CITY, UTAH

RECOMMENDED FOR APPROVAL — JAN.01.2017 DATE
CHAIRMAN STANDARDS COMMITTEE APPROVED — JAN.01.2017 DATE
DEPUTY DIRECTOR — DATE

STANDARD DRAWING TITLE
TRAFFIC CONTROL FOR NON-DURABLE PAVEMENT MARKING

STD. DWG. NO.
TC 16

DGN File:L:\Standard Drawings\Imperial\2017 Approved\1-All Drawings\TC16.dgn
28-NOV-2016

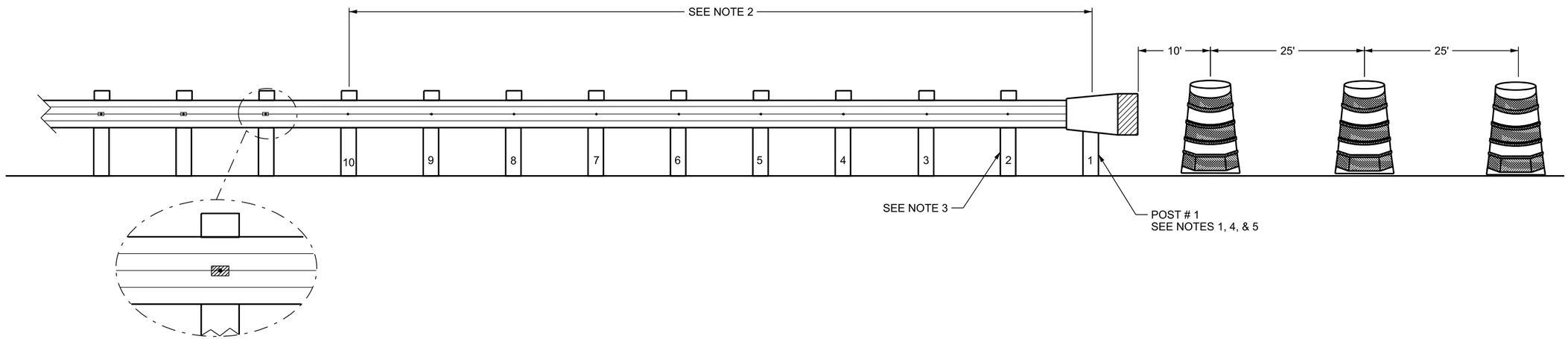

WORK ZONE W-BEAM GUARDRAIL END PROTECTION USING END TREATMENT TYPE G IMPACT HEAD

INTERMEDIATE 3 DAY MAXIMUM ALLOWED USE

NOTES:

1. INSTALL IMPACT HEAD TO PROTECT EXPOSED GUARDRAIL END FOR A PERIOD NOT TO EXCEED 3 DAYS.
2. REMOVE WASHER WHEN PRESENT FROM THE FACE OF RAIL FOR A MINIMUM OF 10 POSTS BEFORE INSTALLING IMPACT HEAD.
3. REMOVE BLOCK AT POST 2. DO NOT ATTACH W-BEAM RAIL TO POST 2.
4. REMOVE BLOCK AND POST TO RAIL CONNECTION AT POST 1 BEFORE INSTALLING IMPACT HEAD.
5. SECURE IMPACT HEAD TO POST 1 ACCORDING TO MANUFACTURER'S REQUIREMENTS.
6. PLACE A MINIMUM OF 3 PLASTIC DRUMS OR VERTICAL PANELS SPACED AS SHOWN ABOVE IN ADVANCE OF IMPACT HEAD.
7. USE FOR MAINTENANCE REPAIR AND CONSTRUCTION PROJECTS.
8. USE DEPARTMENT GUIDELINES FOR CRASH CUSHIONS AND END TREATMENTS.

REVISIONS

NO.	DATE	APPR.	REMARKS

UTAH DEPARTMENT OF TRANSPORTATION
STANDARD DRAWINGS FOR ROAD AND BRIDGE CONSTRUCTION
SALT LAKE CITY, UTAH

RECOMMENDED FOR APPROVAL — JAN 01, 2017 DATE
CHAIRMAN STANDARDS COMMITTEE — JAN 01, 2017 DATE
APPROVED
DEPUTY DIRECTOR

TRAFFIC CONTROL
WORK ZONE GUARDRAIL
INTERMEDIATE
END PROTECTION

STANDARD DRAWING TITLE

STD. DWG. NO.
TC 17

28-NOV-2016 DGN File:L:\Standard_Drawings\Imperial\2017 Approved\1-All Drawings\TC17.dgn

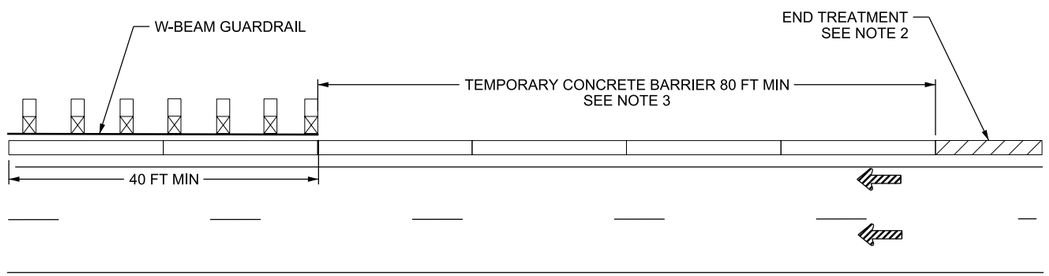

DETAIL A: TEMPORARY CONCRETE BARRIER PROTECTION FOR W-BEAM GUARDRAIL

REFER TO TC 17 FOR W-BEAM END PROTECTION OF 3 DAYS OR LESS

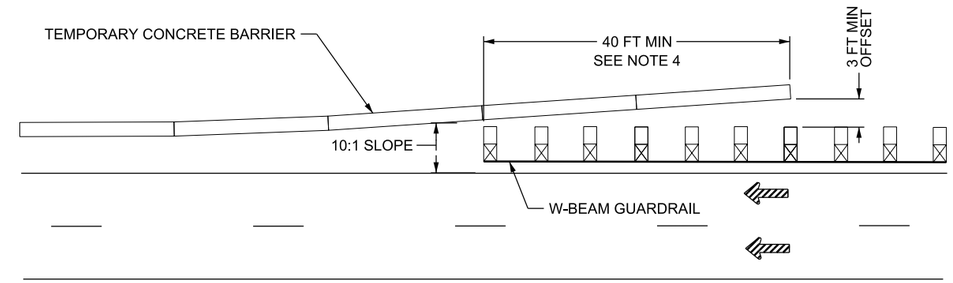

DETAIL B: W-BEAM GUARDRAIL WITH TEMPORARY CONCRETE BARRIER

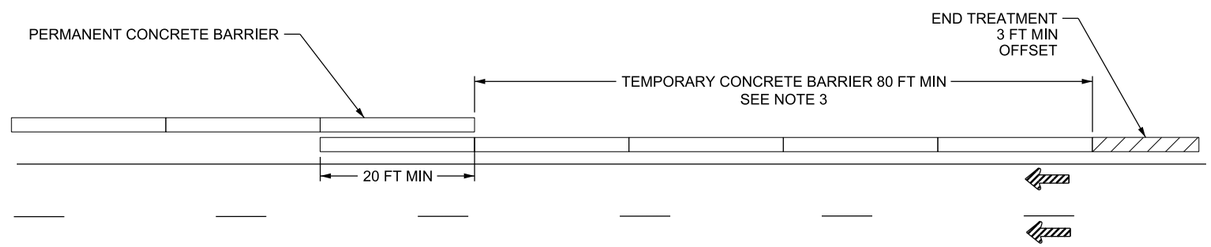

DETAIL C: TEMPORARY CONCRETE BARRIER PROTECTION FOR PERMANENT CONCRETE BARRIER

NOTES:

1. USE THE DRAWING FOR LAYOUT OF TEMPORARY BARRIER. SEE APPLICABLE TC DRAWINGS FOR ADDITIONAL TRAFFIC CONTROL DEVICE LAYOUT REQUIREMENTS.
2. SEE THE DEPARTMENT'S GUIDELINES FOR CRASH CUSHIONS & END TREATMENTS FOR APPROVED CONSTRUCTION ZONE SYSTEMS. PLACE THE END TREATMENT AND THE LAST BARRIER PARALLEL TO TRAFFIC.
3. MEET ROADSIDE DESIGN GUIDE'S LENGTH OF NEED REQUIREMENT IF BLUNT END HAZARD OFFSET IS GREATER THAN 2 FT FROM THE BACK SIDE OF THE TEMPORARY BARRIER.
4. DO NOT PLACE CONCRETE BARRIER ON SLOPES GREATER THAN 6:1 BEHIND THE W-BEAM GUARDRAIL. THIS DETAIL APPLIES TO WORK ZONES ONLY.
5. CONCRETE BARRIER STABILIZATION PINS NOT REQUIRED IN WORK ZONE APPLICATIONS UNLESS SPECIFIED IN CONTRACT DOCUMENTS.
6. HALF BARRIER SECTIONS ALLOWED WHEN PLACED ACCORDING TO STD DWG BA 2E.

REVISIONS

NO.	DATE	APPR.	REMARKS

UTAH DEPARTMENT OF TRANSPORTATION
STANDARD DRAWINGS FOR ROAD AND BRIDGE CONSTRUCTION
SALT LAKE CITY, UTAH

RECOMMENDED FOR APPROVAL — JAN. 01, 2017 DATE
CHAIRMAN STANDARDS COMMITTEE APPROVED — JAN. 01, 2017 DATE
DEPUTY DIRECTOR

BLUNT END PROTECTION FOR W-BEAM GUARDRAIL AND CONCRETE BARRIER

STANDARD DRAWING TITLE

STD. DWG. NO.
TC 18

28-NOV-2016 DGN File:L:\Standard Drawings\Imperial\2017 Approved\1-All Drawings\TC18.dgn

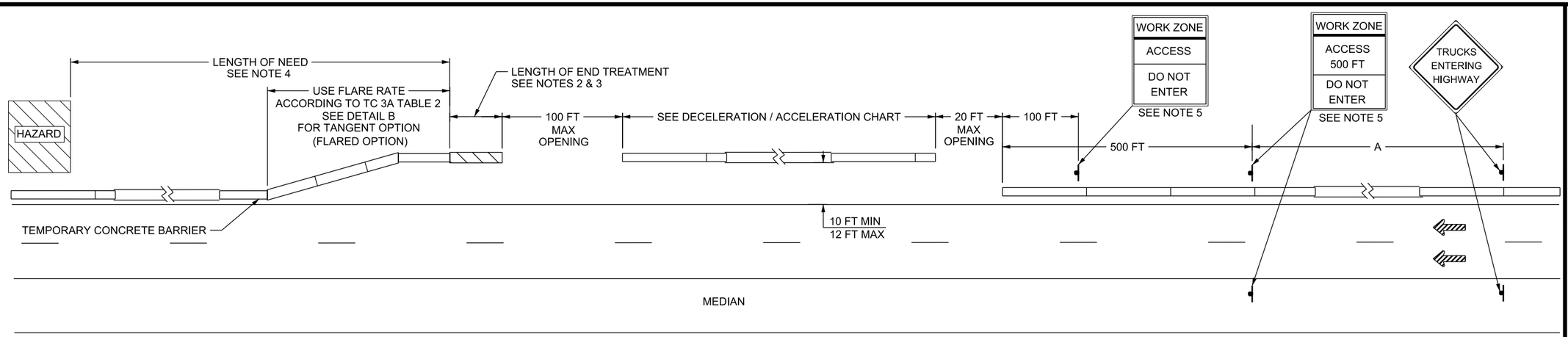

DETAIL A: WORK AREA OUTSIDE SHOULDER

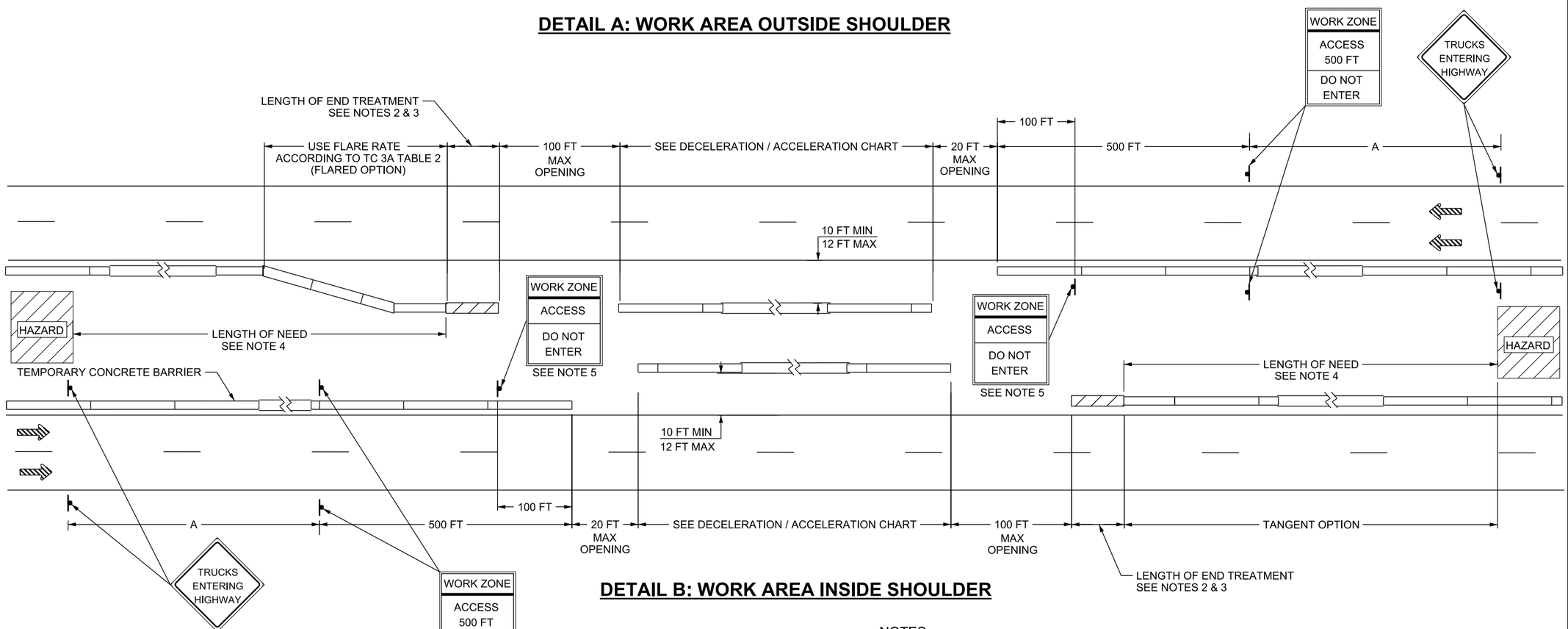

DETAIL B: WORK AREA INSIDE SHOULDER

DECELERATION / ACCELERATION CHART	
PRE-CONSTRUCTION POSTED SPEED LIMIT (MPH):	MINIMUM REQUIRED LENGTH:
55	500 FT
60	580 FT
65	660 FT
70	740 FT
75	820 FT
80	920 FT

NOTES:

1. SELECT THE CONSTRUCTION ACCESS POINT LOCATIONS WITH THE APPROVAL OF THE ENGINEER. SELECT LOCATIONS WITH GOOD SIGHT DISTANCE AND EASE OF ACCESS FOR ENTERING VEHICLES. AVOID LOCATIONS JUST BEYOND THE CREST OF VERTICAL CURVES, ON STRUCTURES, OR ASCENDING GRADES.
2. USE THE DEPARTMENT'S GUIDELINES FOR CRASH CUSHIONS & END TREATMENTS FOR APPROVED CONSTRUCTION ZONE SYSTEMS.
3. PLACE THE CRASH CUSHION / END TREATMENT AND THE LAST BARRIER SECTION PARALLEL TO TRAFFIC.
4. USE PROPER LENGTH OF NEED FOR BOTH FLARED AND TANGENT TEMPORARY BARRIER OPTIONS ACCORDING TO THE REQUIREMENTS OF THE ROADSIDE DESIGN GUIDE. USE THE PRE-CONSTRUCTION POSTED SPEED LIMIT PRIOR TO THE WORK ZONE FOR THE DESIGN OF THE REQUIRED LENGTH OF NEED.
5. SEE STD DWG TC 4D SERIES FOR SIGN DESIGN AND LAYOUT.
6. USE THE IDENTICAL LEGEND SUPPLEMENTAL SIGNING FOR "TRUCKS ENTERING HIGHWAY" AND "WORK ZONE ACCESS 500 FT" SIGNS.
7. MAINTAIN MINIMUM 2 FT SHOULDER WIDTHS.

REVISIONS

NO.	DATE	APPR.	REMARKS

UTAH DEPARTMENT OF TRANSPORTATION
STANDARD DRAWINGS FOR ROAD AND BRIDGE CONSTRUCTION
SALT LAKE CITY, UTAH

RECOMMENDED FOR APPROVAL — JAN.01.2017 DATE
CHAIRMAN STANDARDS COMMITTEE APPROVED — JAN.01.2017 DATE
DEPUTY DIRECTOR

STANDARD DRAWING TITLE
CONSTRUCTION ACCESS POINTS FOR SPEEDS OF 55 MPH AND GREATER

STD. DWG. NO.
TC 19

DGN File:L:\Standard Drawings\Imperial\2017 Approved\1-All Drawings\TC19.dgn
28-NOV-2016

End of 2017 Standard Drawings

For Road and Bridge Construction