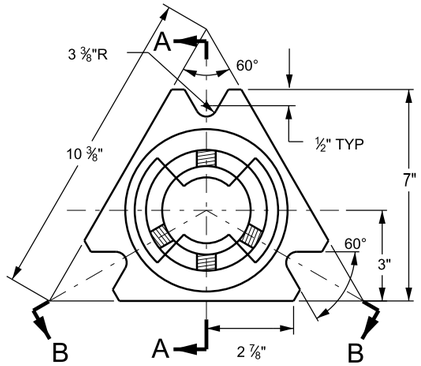

TOP VIEW

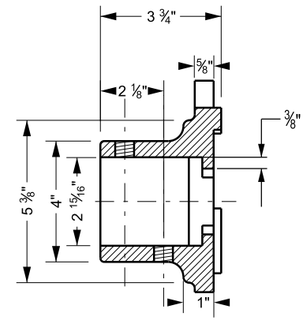

SECTION A-A

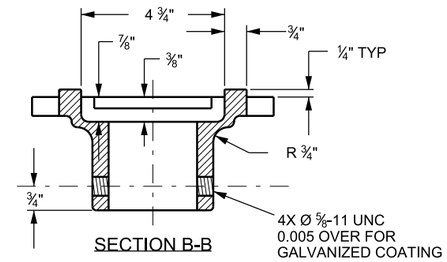

SECTION B-B

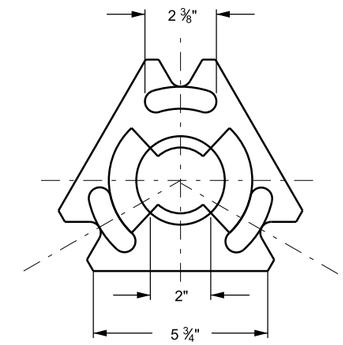

BOTTOM VIEW

SLIPBASE CASTING

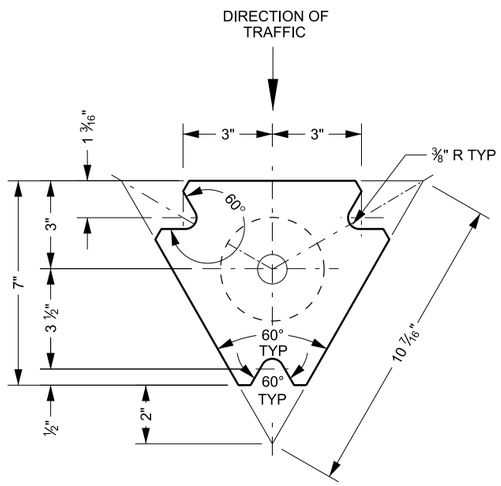

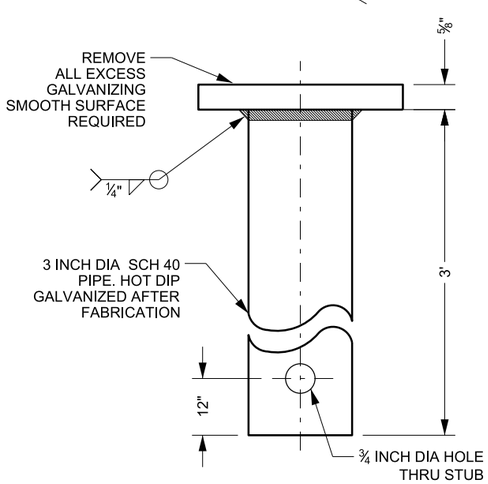

SLIPBASE GROUND STUB BASE

ASTM A 536

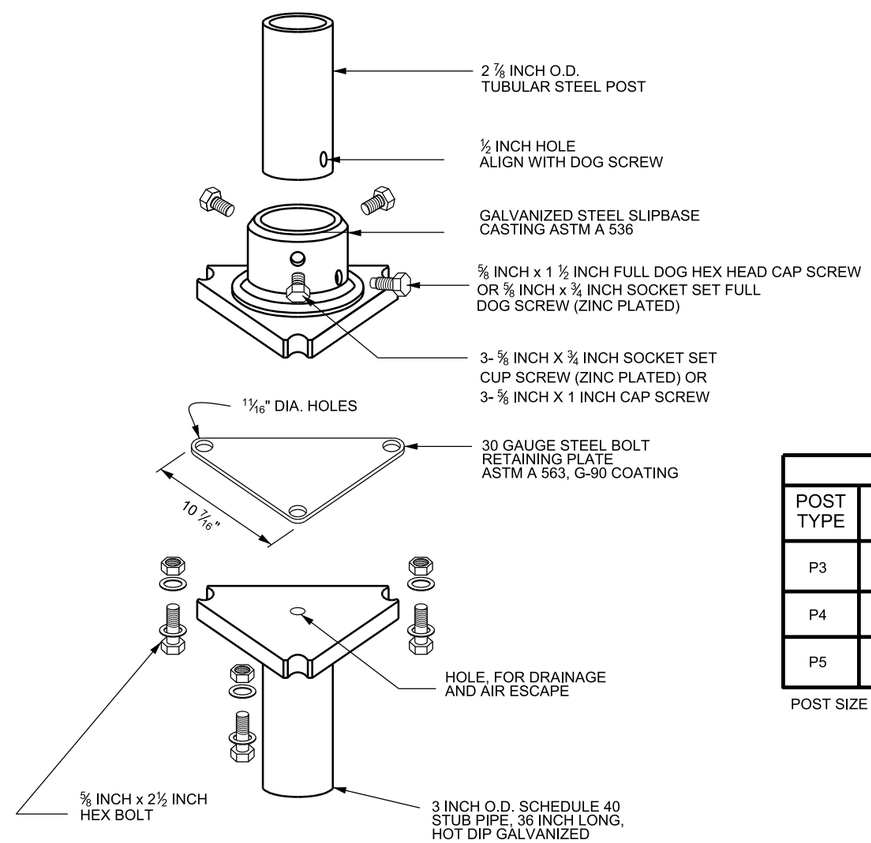

TYPICAL ASSEMBLY

POST DETAIL CHART			
POST TYPE	OUTSIDE DIAMETER	WALL GAUGE THICKNESS	MATERIAL AND COATING REQUIREMENTS
P3	2 ⅞ INCH	0.134 INCH (BWG 10)	SEE STANDARD SPECIFICATION 02891
P4	2 ⅞ INCH	0.160 INCH (NP 40)	
P5	2 ⅞ INCH	0.276 INCH (SCH 80)	

POST SIZE DETERMINED BY BASE MANUFACTURER'S WIND LOADING REQUIREMENTS.

NOTES:

1. REFER TO STD DWG SN 10B FOR SLIPBASE GROUND STUB FOUNDATION DETAIL.

SUPPLEMENTAL DRAWING

REVISIONS

NO.	DATE	APPR.	REMARKS
1	02/28/13	MD	ADDED DIRECTION ARROW TO STUB BASE DETAIL.
			CHANGED PLATING TO GALVANIZING WITHIN
			SECTION B-B SLIPBASE CASTING DETAIL.
			CHANGED BOLT LENGTH FROM 1 INCH TO 1 1/2 INCH
			WITHIN THE TYPICAL ASSEMBLY DETAIL.
			REPLACED ASTM SPECIFICATION WITH STD SPEC
			02891 WITHIN POST DETAIL CHART.

UTAH DEPARTMENT OF TRANSPORTATION

STANDARD DRAWINGS FOR ROAD AND BRIDGE CONSTRUCTION

SALT LAKE CITY, UTAH

RECOMMENDED FOR APPROVAL — FEB. 28, 2013 DATE

CHAIRMAN STANDARDS COMMITTEE APPROVED — FEB. 28, 2013 DATE

DEPUTY DIRECTOR

SLIPBASE
SIGN BASE (B3)
HARDWARE

STANDARD DRAWING TITLE

STD. DWG. NO.

SN 10A

DGN File:L:\Standard Drawings\Imperial\2012Approved_Supplemental Issues\Sup34approved\SN10A.dgn
07-MAR-2013