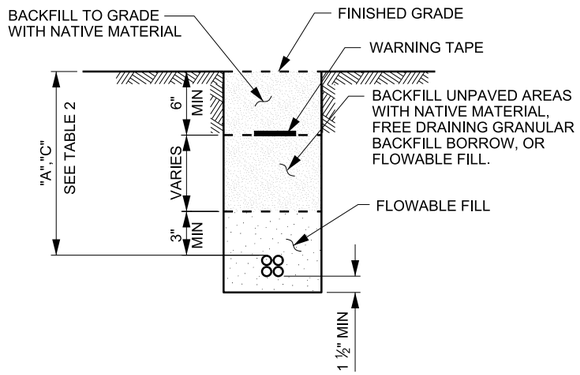

A 1-D MULTIDUCT CONDUIT

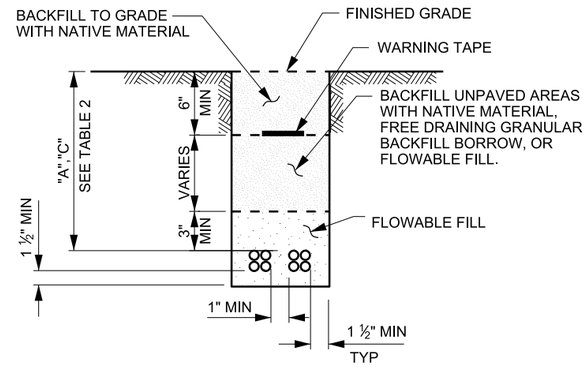

B 2-D MULTIDUCT CONDUIT

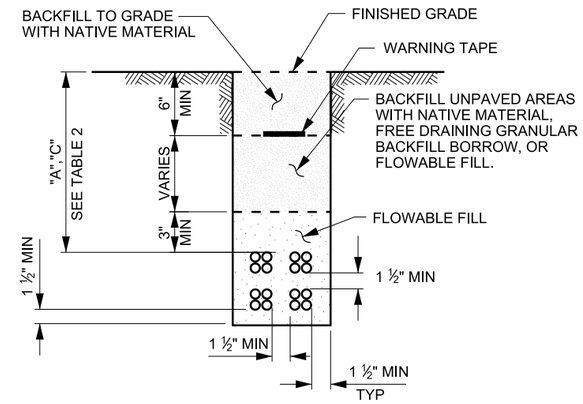

C 4-D MULTIDUCT CONDUIT

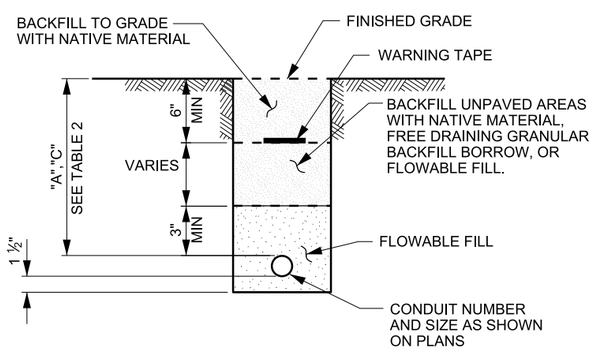

D NON-MULTIDUCT CONDUIT

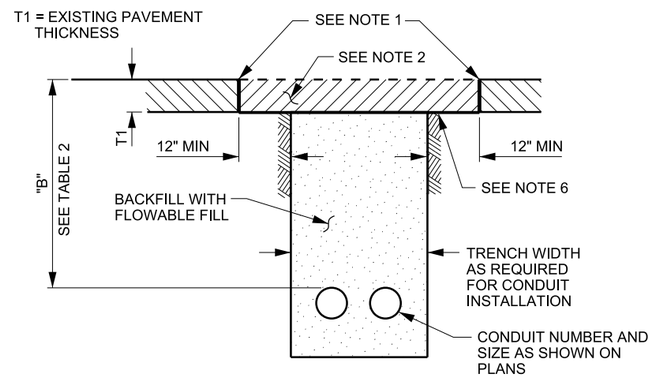

E CONDUIT TRENCHED IN ASPHALT PAVEMENT RESTORED WITH T PATCH

TABLE 1. T PATCH RESTORATION

EXISTING ASPHALT PAVEMENT THICKNESS (T1) IN INCHES	RESTORATION T PATCH THICKNESS IN INCHES
0 - 3 ½"	3 ½"
3 ½" - 7"	MATCH EXISTING DEPTH
7" OR GREATER	7"

TABLE 2. MINIMUM CONDUIT DEPTH

	DEPTH IN INCHES	AREA
A	36	OUTSIDE 20 FT OF PAVEMENT EDGE
B	48	HIGHWAY RIGHT-OF-WAY UNDER ASPHALT PAVEMENT SURFACE
C	60	WITHIN 20 FT OF PAVEMENT EDGE

NOTES:

1. SAW CUT PAVEMENT EDGES. APPLY A HOT-POUR RUBBERIZED ASPHALT JOINT SEALANT OR APPROVED EQUAL, APPLIED AFTER PATCH IS INSTALLED.
2. USE HMA MATERIAL FOR T-PATCH. USE OPEN-GRADED SURFACE COURSE FOR THE TOP 1 INCH OF HMA FOR PATCHES GREATER THAN 12 FT WIDE. WHERE OPEN-GRADED SURFACE COURSE EXISTS, MATCH EXISTING PAVEMENT AND CROSS-SECTION.
3. ENCASE ALL OPEN TRENCH CONDUIT IN FLOWABLE FILL, ENCASE PLOWED AND BORED CONDUIT IN FLOWABLE FILL AT EXPOSED LOCATIONS, CONDUIT SPLICE POINTS, AND BOX CONNECTIONS.
4. INSTALL DETECTABLE PULL TAPE IN ALL EMPTY CONDUITS.
5. EVENLY APPLY TACK COAT ON FINAL BACKFILL BEFORE INSTALLING T-PATCH.

SUPPLEMENTAL DRAWING

REVISIONS

NO.	DATE	APPR.	REMARKS
1	06/27/13	MAA	REVISED TABLE 2, DIMENSION B TO 48 INCHES.

UTAH DEPARTMENT OF TRANSPORTATION
STANDARD DRAWINGS FOR ROAD AND BRIDGE CONSTRUCTION
SALT LAKE CITY, UTAH

RECOMMENDED FOR APPROVAL — JUN.27.2013 DATE
CHAIRMAN STANDARDS COMMITTEE APPROVED — JUN.27.2013 DATE
DEPUTY DIRECTOR

STANDARD DRAWING TITLE
CONDUIT DETAILS

STD. DWG. NO.
AT 6

DGN File:L:\Standard Drawings\Imperial\2012Approved_Supplemental Issues\Sup5Approved\AT06.dgn
16-JUL-2013