USE THIS DETAIL FOR "3R" PROJECTS ONLY

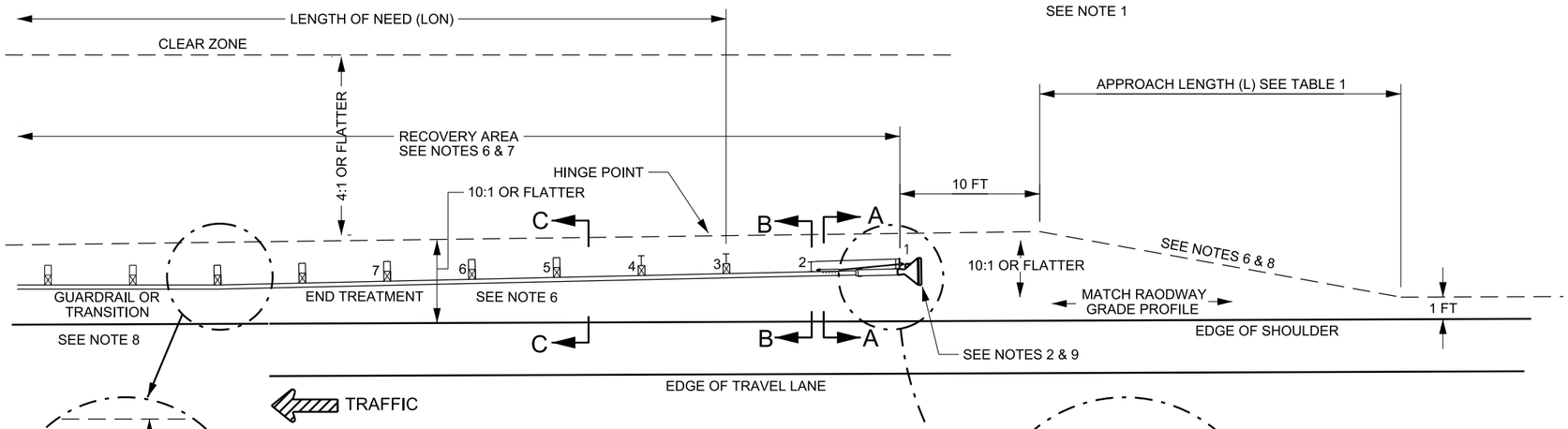

TABLE 1	
SPEED MPH	MIN LENGTH (L)
LESS THAN 40	50 FT
40 TO 55	70 FT
60 TO 80	100 FT

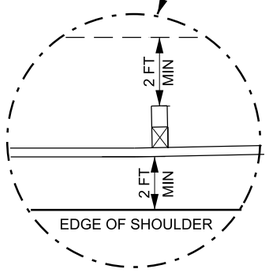

END TREATMENT TYPE G

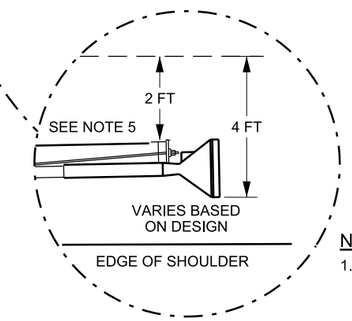

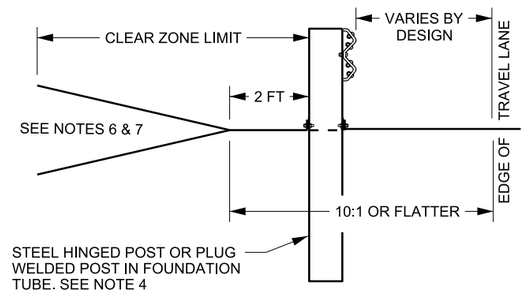

TYPICAL SECTION A-A

POST 1 & 2 , SEE NOTE 4A

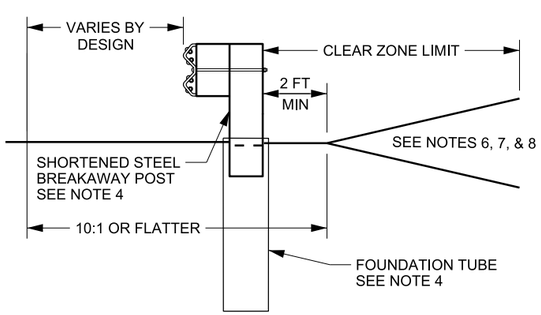

TYPICAL SECTION B-B

POSTS 3 & 4, SEE NOTE 4

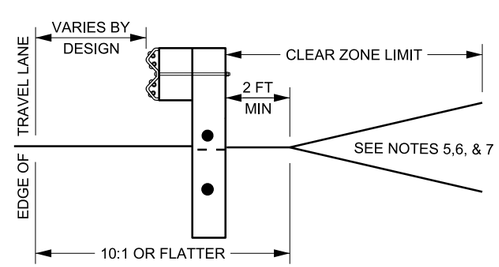

TYPICAL SECTION C-C

POSTS 5-8 , SEE NOTE 4

NOTES:

1. INSTALL END TREATMENT USING THIS DRAWING ONLY WHEN THERE IS INSUFFICIENT ROOM TO INSTALL MATERIALS AS REQUIRED IN STD DWG CC 8A WITHOUT THE PURCHASE OF ADDITIONAL RIGHT OF WAY.

2. APPROVED SYSTEMS: ET-2000 AND ET-PLUS MANUFACTURED BY TRINITY INDUSTRIES AND THE SKT-350, MANUFACTURED BY ROAD SYSTEMS INC. REFER TO UDOT'S GUIDELINES FOR CRASH CUSHIONS AND BARRIER END TREATMENTS FOR SPECIFIC SYSTEM DETAILS.

3. SYSTEM OFFSET:
   A. INSTALL SYSTEM WITH 2 FT OFFSET (25:1 FLARE RATE) WHEN USED WITH A TANGENT BARRIER SYSTEM.
   B. INSTALL SYSTEM AT THE SAME FLARE RATE AS THE BARRIER IT IS BEING ATTACHED TO.

4. REFER TO GUIDELINES FOR CRASH CUSHION AND BARRIER END TREATMENTS FOR POST REQUIREMENTS.
   A. POST 1
      1) ET SERIES-HINGE BREAKAWAY POST (HBA)
      2) SKT-350 PLUG WELDED POST INSIDE FOUNDATION TUBE

5. RAIL ELEMENTS
   A. USE 12 1/2 FT RAIL ELEMENTS AS SPECIFIED BY THE SYSTEM MANUFACTURER.
   B. DO NOT BOLT RAIL ELEMENT AT POST 1.
   C. REFER TO MANUFACTURER'S SPECIFICATIONS FOR OTHER RAIL TO POST BOLT REQUIREMENTS.

6. COMPLETE SLOPE PREPARATION PRIOR TO INSTALLING SYSTEM.
   A. USE 10:1 OR FLATTER SLOPES IN APPROACH AREA.
   B. CONSTRUCT RECOVERY AREA SLOPES ACCORDING TO CC 8A WHEN CONDITIONS PERMIT. CONSULT ENGINEER FOR ALLOWABLE SLOPES WHEN REQUIREMENTS OF CC 8A CANNOT BE MET.
      1) RECOVERY AREA IS THE AREA BEHIND THE END TREATMENT AND BARRIER SYSTEM EXTENDING FROM THE APPROACH END OF THE END TREATMENT TO THE END OF THE CALCULATED LENGTH OF NEED.

7. CLEAR RECOVERY AND APPROACH AREAS OF ANY FIXED OBJECTS OR HAZARDS.
   A. DO NOT PLACE SIGNS, POSTS, OR OTHER HAZARDS IN APPROACH AREA.
   B. USE BREAKAWAY SIGNS OR POSTS WHEN PLACED IN RECOVERY AREA, AND MAINTAIN A MINIMUM 10 FT CLEARANCE TO THE SIDES AND REAR OF THE SYSTEM. MITIGATE POTENTIAL HAZARDS IN RECOVERY AREA.

8. CONSTRUCT PLATFORM AS REQUIRED WHEN THE SPACE IS AVAILABLE EVEN IF THE PLATFORM EXTENDS BEYOND THE CLEAR ZONE REQUIREMENTS.

9. USE GUARDRAIL TRANSITION, BA 4 SERIES STD DWGS, WHEN ATTACHING SYSTEM TO CONCRETE BARRIER OR BRIDGE PARAPET.

10. INSTALL REQUIRED MARKINGS ACCORDING TO STD DWG CC 1.

11. USE THE CURRENT EDITION, ROADSIDE DESIGN GUIDE TO ESTABLISH CLEAR ZONE REQUIREMENTS AND LENGTH OF NEED (LON) REQUIREMENTS.

SUPPLEMENTAL DRAWING

REVISIONS

NO.	DATE	APPR.	REMARKS
1	6/27/13	SDD	REVISED NOTES TYP. SEC. A-A & B-B.

UTAH DEPARTMENT OF TRANSPORTATION
STANDARD DRAWINGS FOR ROAD AND BRIDGE CONSTRUCTION
SALT LAKE CITY, UTAH

RECOMMENDED FOR APPROVAL — JUNE 27 2013 DATE
CHAIRMAN STANDARDS COMMITTEE APPROVED — JUNE 27 2013 DATE
DEPUTY DIRECTOR

GRADING AND INSTALLATION DETAILS FOR "3R" PROJECTS END TREATMENT TYPE G

STANDARD DRAWING TITLE

STD. DWG. NO.
CC 8B

DGN File:L:\Standard Drawings\Imperial\2012Approved_Supplemental Issues\Supp5Approved\CC08B.dgn
16-JUL-2013