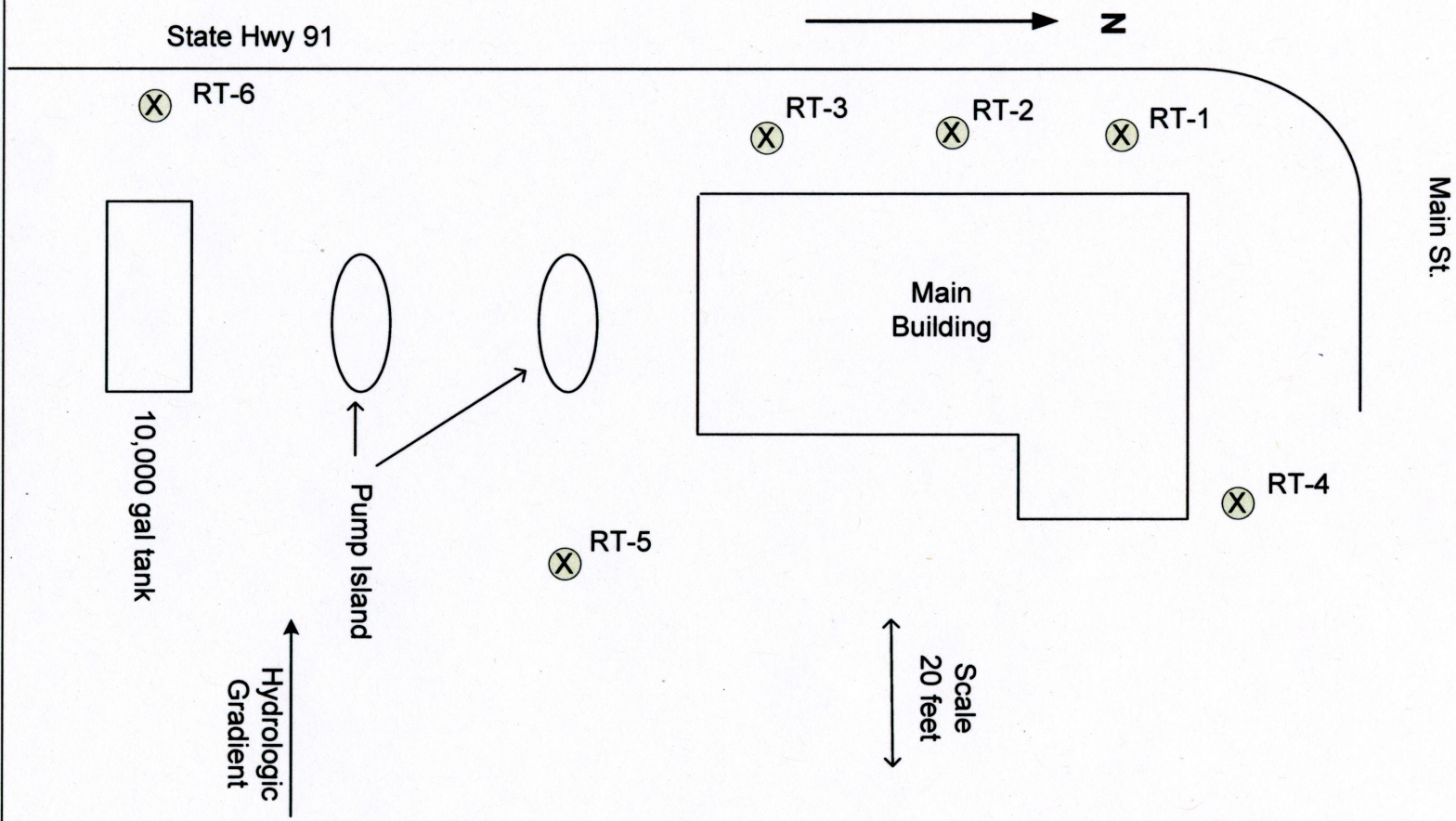Randy's Texaco Site Layout and Boring Locations