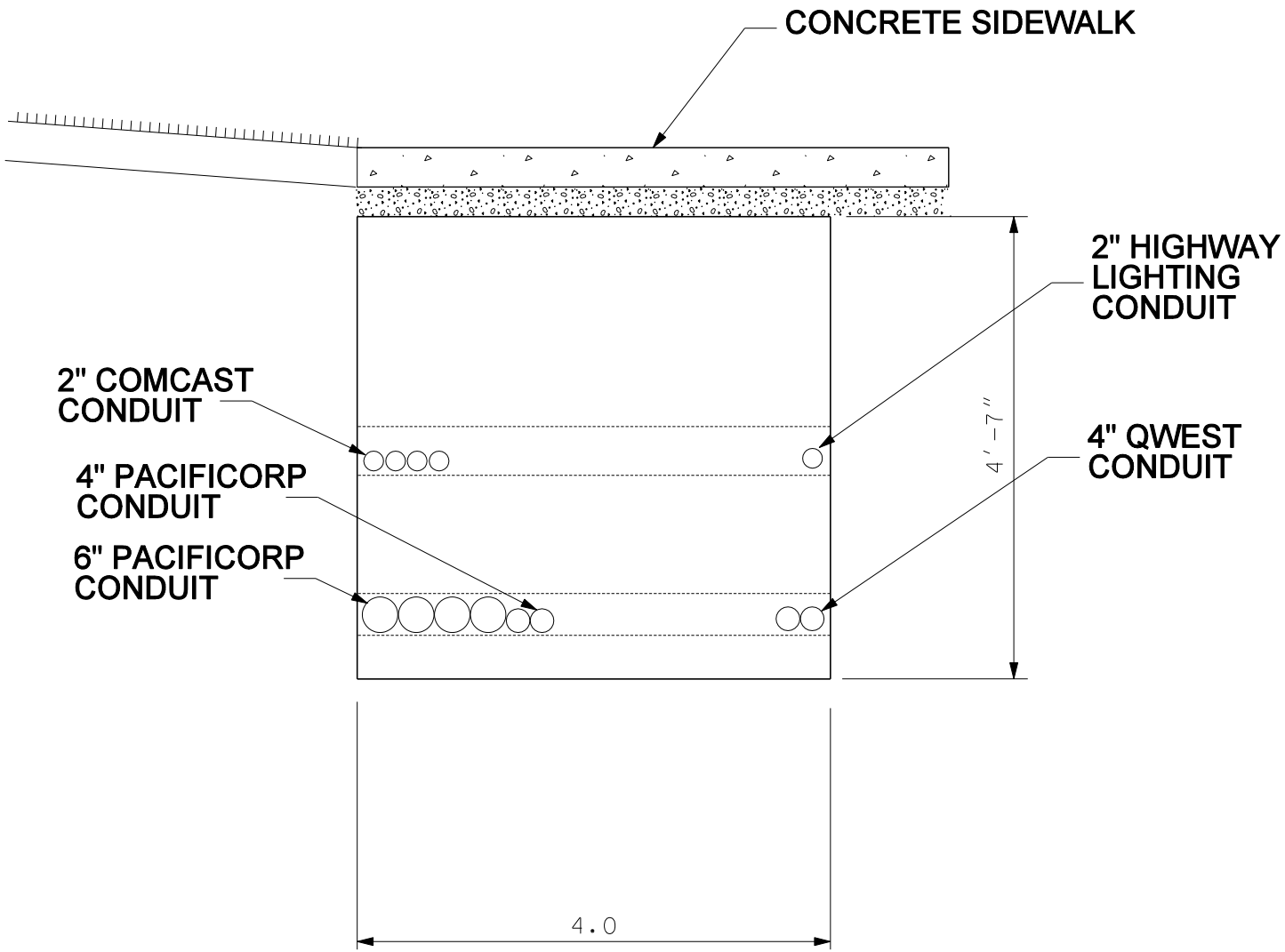

STATE STREET UTILITY TRENCH

LEFT (WEST)
Not to Scale