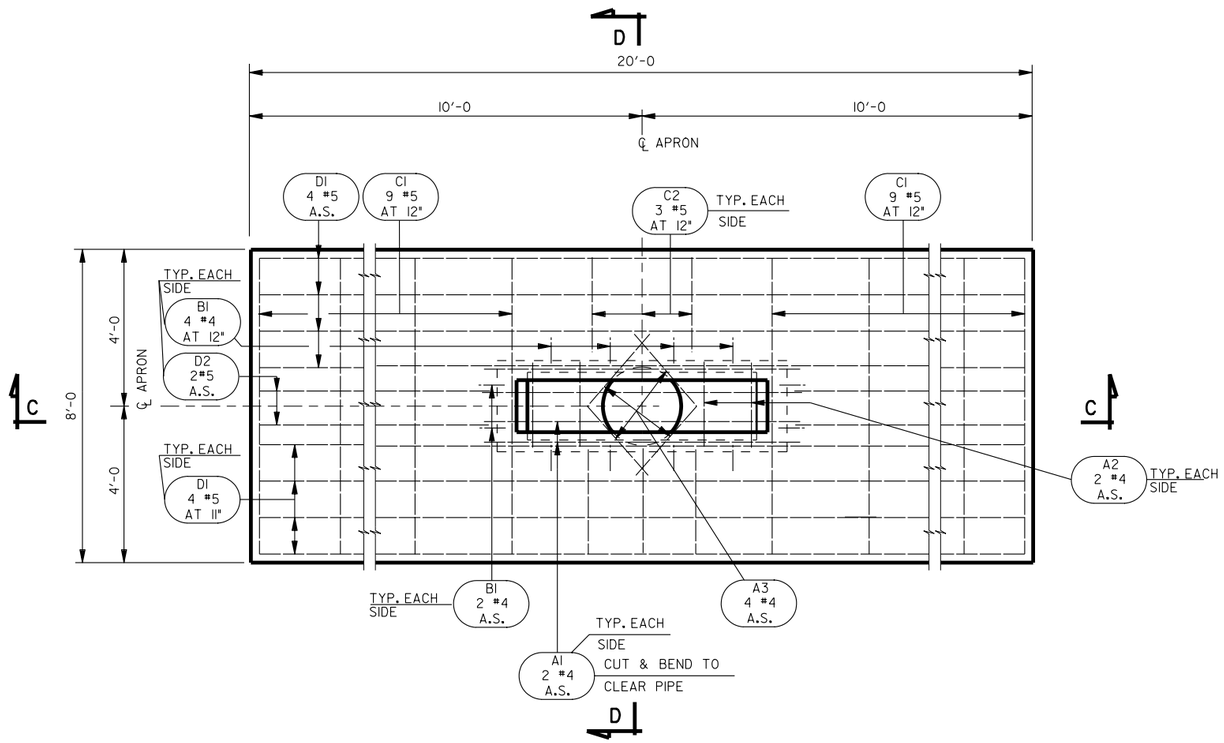

PLAN TYPE "B"

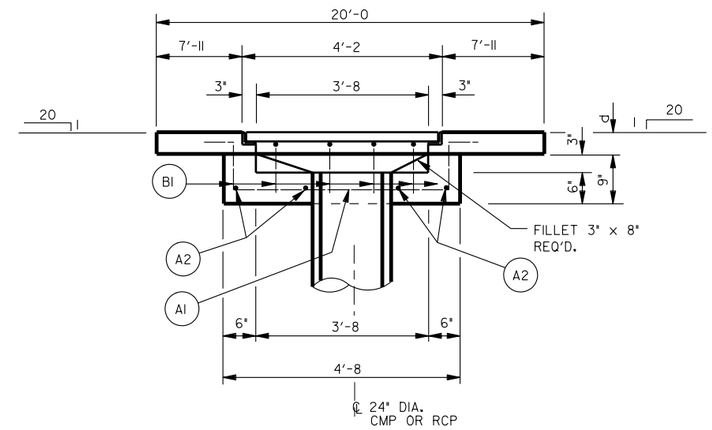

SECTION C-C

NOTE:
SEE STD DWG CB 6B

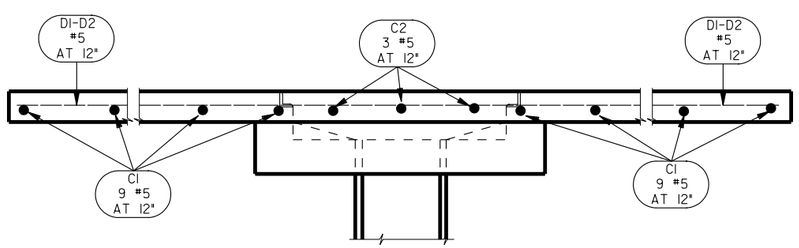

TYP. LONGITUDINAL APRON SECTION
(FOR TYPE "B" DROP INLET)

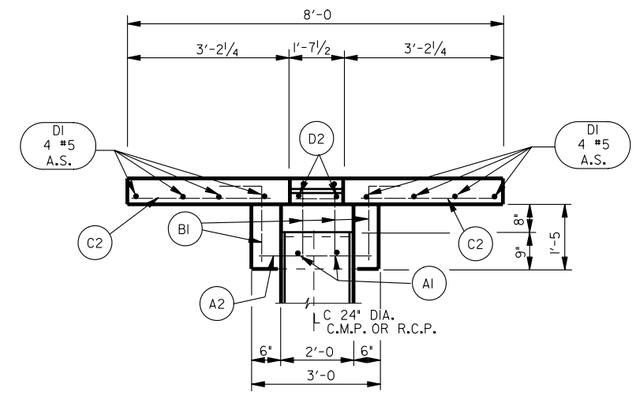

SECTION D-D

REINFORCING STEEL SCHEDULE

DROP INLET TYPE	DIMENSION (d)	A1			A2			A3			B1			C1			C2			D1			D2			QUANTITIES	
		SIZE	NO.	LENGHT	SIZE	NO.	LENGHT	SIZE	NO.	LENGHT	SIZE	NO.	a (1'-2)	SIZE	NO.	LENGHT	SIZE	NO.	LENGHT	SIZE	NO.	LENGHT	SIZE	NO.	LENGHT	REINF. STEEL LB.	CONC. CU.YD.
B	8"	4	6	4'-4	4	8	2'-8	4	4	2'-0	4	12	1'-0	6	18	7'-8	6	6	2'-10	5	8	19'-8	5	4	5'-5	483	4.056

NO.	DATE	APPR.	REMARKS

REVISIONS

UTAH DEPARTMENT OF TRANSPORTATION
STANDARD DRAWINGS FOR ROAD AND BRIDGE CONSTRUCTION
SALT LAKE CITY, UTAH

RECOMMENDED FOR APPROVAL — JULY 03,2002 DATE

CHAIRMAN STANDARDS COMMITTEE APPROVED — JULY 03,2002 DATE

DEPUTY DIRECTOR

STANDARD DRAWING TITLE
STANDARD CATCH BASIN AND CLEANOUT BOX DROP INLET TYPE "B" DETAILS

STD DWG
CB 6C