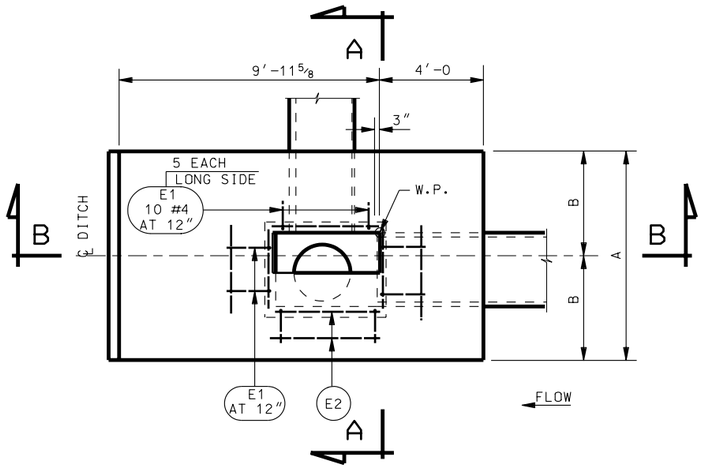

PLAN

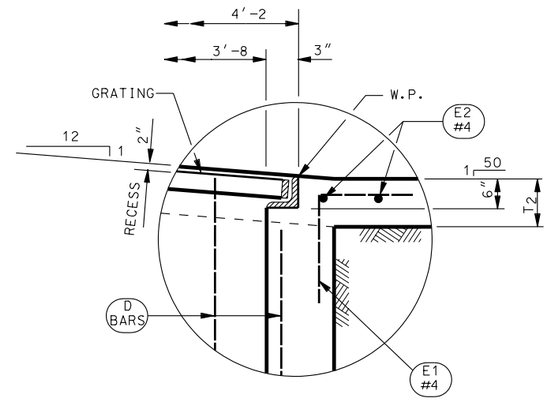

DETAIL "C"

NOTES:

1. EACH LINE REPRESENTS ONE COMPLETE STRUCTURE OF THE KIND SPECIFIED. LINE AND TABLE NUMBERS WITHIN THE DRAWING SET CORRESPOND. BASIC DROP INLET BOX DIMENSIONS AND REINFORCEMENT DETAILS BELOW MATCH LINE ARE GIVEN IN TABLES 1 THRU 4, AND TABLES 5 THRU 9 OF THE TYPE SPECIFIED. EXTEND ALL WALL REBAR INTO ATTACHED APRON.
2. ALL BARS (INCLUDING 3 #4 BARS) ARE STRAIGHT UNLESS OTHERWISE SHOWN.
3. FOR M, M1 AND M2 DIMENSIONS SEE TYPE "C" AND "D" DIMENSIONS SCHEDULES STD DWG CB 6D AND CB 6H.

APRON DIMENSIONS

TABLE NO.	T_2	A	B
1 THRU 4	8″	8′-0	4′-0
5	9″	8′-0	4′-0
6	9″	9′-4 1/2	4′-8 1/4
7	10″	10′-4 1/2	5′-2 1/4
8	10″	11′-4 1/2	5′-8 1/4
9	10″	12′-4 1/2	6′-2 1/4

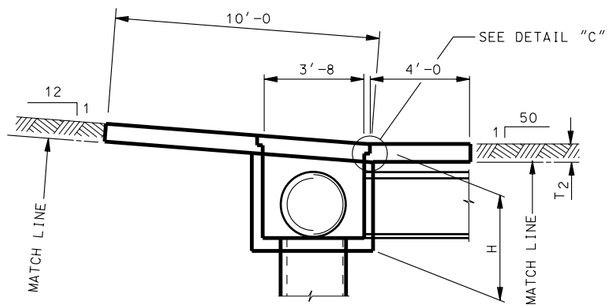

SECTION B-B

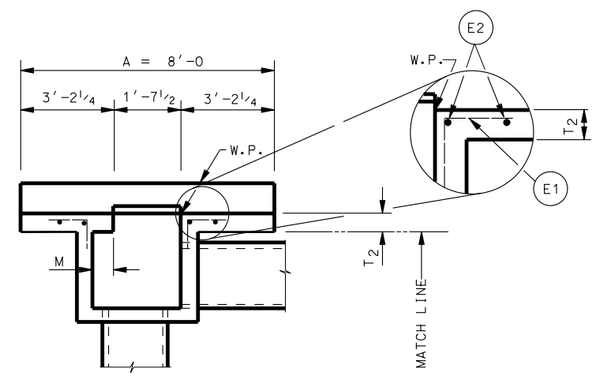

SECTION A-A

APRON OPTION DETAILS
(DROP INLET TYPE "C")

APRON REINFORCING STEEL SCHEDULE

APRON TO BE USED WITH TABLES 1 THRU 4				
MARK	NO.	LENGTH	TOTAL LENGTH	TOTAL WT. PER APRON
C1	16	7′-8	122′-8	301 LB.
C2	6	2′-10	17′-0	
D1	8	13′-8	109′-4	
D2	1	5′-9	5′-9	
D3	1	3′-11	3′-11	
E1	14	2′-4	32′-8	
E2	2	3′-8	7′-4	
E3	2	3′-0	6′-0	

APRON TO BE USED WITH TABLE 5				
MARK	NO.	LENGTH	TOTAL LENGHTH	TOTAL WT. PER APRON
C1	16	7′-8	122′-8	306 LB.
C2	6	2′-10	17′-0	
D1	8	13′-8	109′-4	
D2	1	5′-9	5′-9	
D3	1	3′-11	3′-11	
E1	16	2′-4	37′-4	
E2	2	4′-0	8′-0	
E3	2	4′-0	8′-0	

APRON TO BE USED WITH TABLE 6				
MARK	NO.	LENGTH	TOTAL LENGTH	TOTAL WT. PER APRON
C1	16	9′-0	144′-0	341 LB.
C2	6	3′-6	21′-0	
D1	10	13′-8	136′-8	
D2	1	5′-9	5′-9	
D3	1	3′-11	3′-11	
E1	20	2′-4	46′-8	
E2	2	5′-0	10′-0	
E3	2	5′-0	10′-0	

APRON TO BE USED WITH TABLE 7				
MARK	NO.	LENGTH	TOTAL LENGTH	TOTAL WT. PER APRON
C1	16	10′-0	160′-0	397 LB.
C2	6	4′-0	24′-0	
D1	10	13′-8	136′-8	
D2	1	5′-9	5′-9	
D3	1	3′-11	3′-11	
E1	24	2′-4	56′-0	
E2	2	5′-6	11′-0	
E3	2	5′-6	11′-0	

APRON TO BE USED WITH TABLE 8				
MARK	NO.	LENGTH	TOTAL LENGTH	TOTAL WT. PER APRON
C1	16	11′-0	176′-0	418 LB.
C2	6	4′-6	27′-0	
D1	10	13′-8	136′-8	
D2	1	5′-9	5′-9	
D3	1	3′-11	3′-11	
E1	24	2′-4	56′-0	
E2	2	6′-0	12′-0	
E3	2	6′-0	12′-0	

APRON TO BE USED WITH TABLE 9				
MARK	NO.	LENGTH	TOTAL LENGTH	TOTAL WT. PER APRON
C1	16	12′-0	192′-0	474 LB.
C2	6	5′-0	30′-0	
D1	12	13′-8	164′-0	
D2	1	5′-9	5′-9	
D3	1	3′-11	3′-11	
E1	28	2′-4	65′-4	
E2	2	6′-6	13′-0	
E3	2	6′-6	13′-0	

E1 BAR

NO.	DATE	APPR.	REMARKS

REVISIONS

UTAH DEPARTMENT OF TRANSPORTATION
STANDARD DRAWINGS FOR ROAD AND BRIDGE CONSTRUCTION
SALT LAKE CITY, UTAH

RECOMMENDED FOR APPROVAL — JULY 03,2002 DATE

CHAIRMAN STANDARDS COMMITTEE APPROVED — JULY 03,2002 DATE

DEPUTY DIRECTOR

STANDARD CATCH BASIN AND CLEANOUT BOX DROP INLET WITH ATTACHED APRON DETAILS

STANDARD DRAWING TITLE

STD DWG
CB 6E