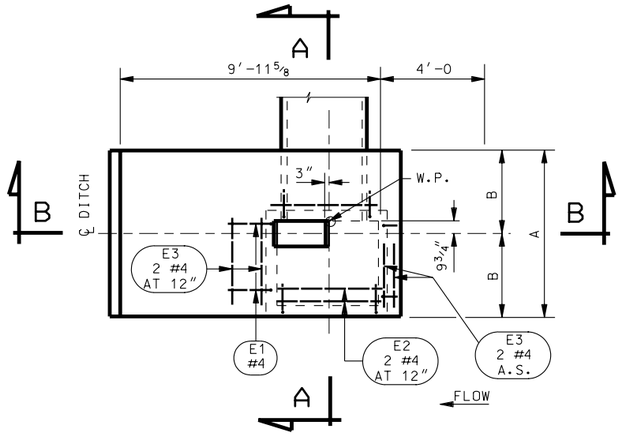

PLAN

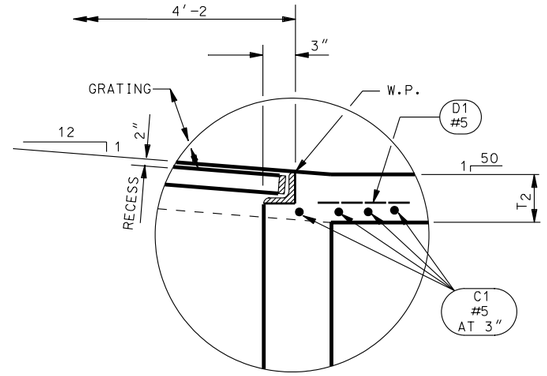

DETAIL "C"

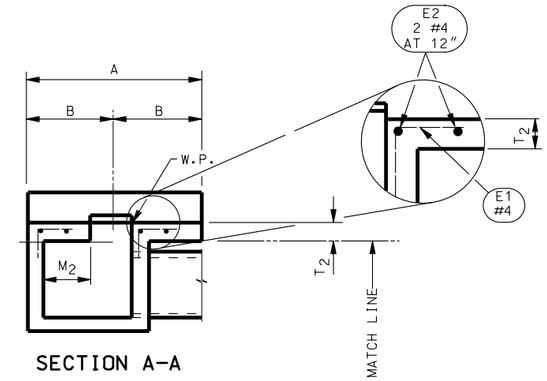

SECTION A-A

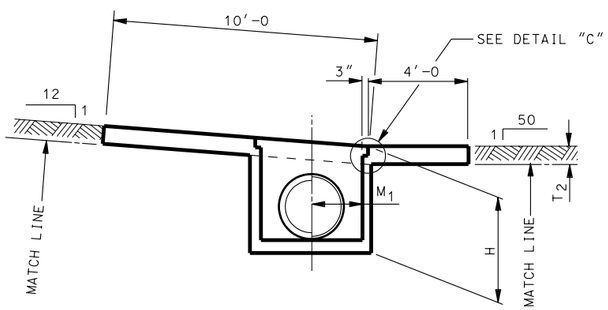

SECTION B-B

NOTE:
REFER TO STD DWG CB 6E FOR NOTES.

APRON OPTION DETAILS
(DROP INLET TYPE "D")

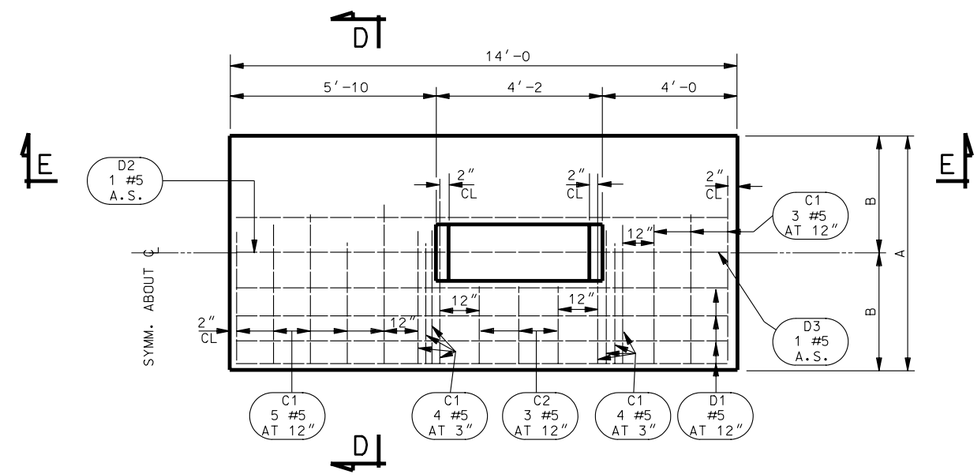

TYP. APRON PLAN
(REBAR PLACEMENT DETAILS)

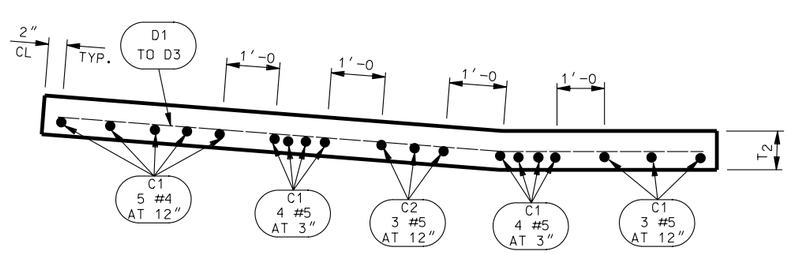

SECTION B-B

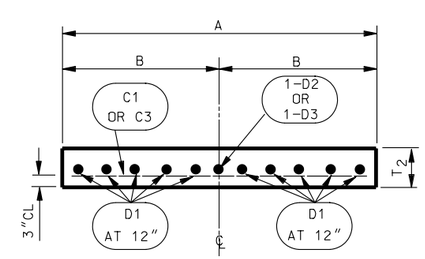

SECTION D-D

NO.	DATE	APPR.	REVISIONS	REMARKS

UTAH DEPARTMENT OF TRANSPORTATION
STANDARD DRAWINGS FOR ROAD AND BRIDGE CONSTRUCTION
SALT LAKE CITY, UTAH

RECOMMENDED FOR APPROVAL — JULY 03,2002 DATE

CHAIRMAN STANDARDS COMMITTEE APPROVED — JULY 03,2002 DATE

DEPUTY DIRECTOR

STANDARD CATCH BASIN AND CLEANOUT BOX DROP INLET WITH ATTACH APRON DETAILS
STANDARD DRAWING TITLE

STD DWG
CB 6F