2005 STANDARD DRAWINGS

Part 4

http://www.udot.utah.gov/index.php/m=c/tid=1091

Change 6, Issued March 2, 2006

Because of file size the 2005 Standard Drawings have been split into six files. The contents of each part are listed below.

Part 1

Index
Sheets 1B and 1C
AT Series Drawings
BA Series Drawings

Part 2

CB Series Drawings
CC Series Drawings
DB Series Drawings

Part 3

DD Series Drawings
DG Series Drawings
EN Series Drawings

Part 4

FG Series Drawings
GF Series Drawings
GW Series Drawings

Part 5

PV Series Drawings
SL Series Drawings
SN Series Drawings

Part 6

ST Series Drawings
SW Series Drawings
TC Series Drawings

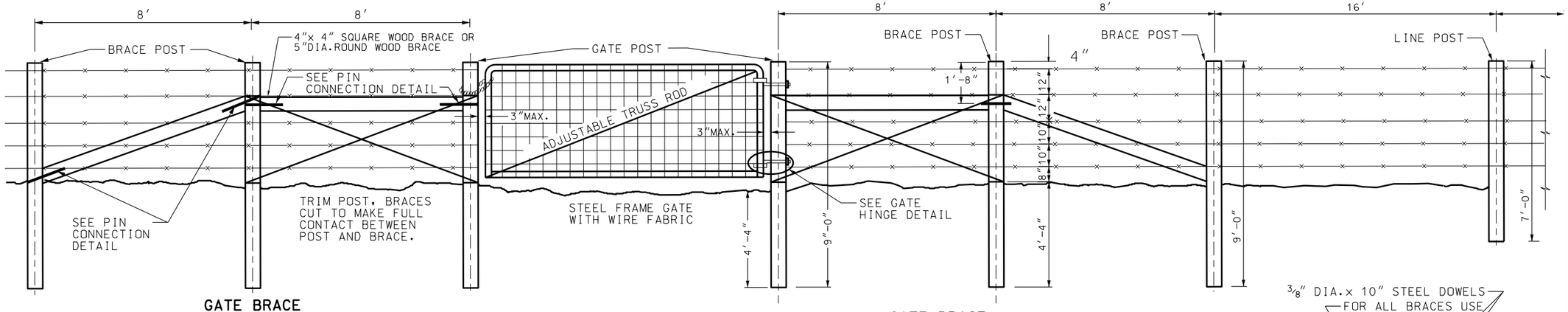

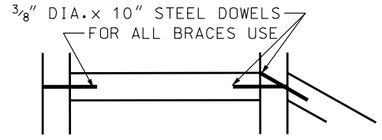

PIN CONNECTION DETAIL

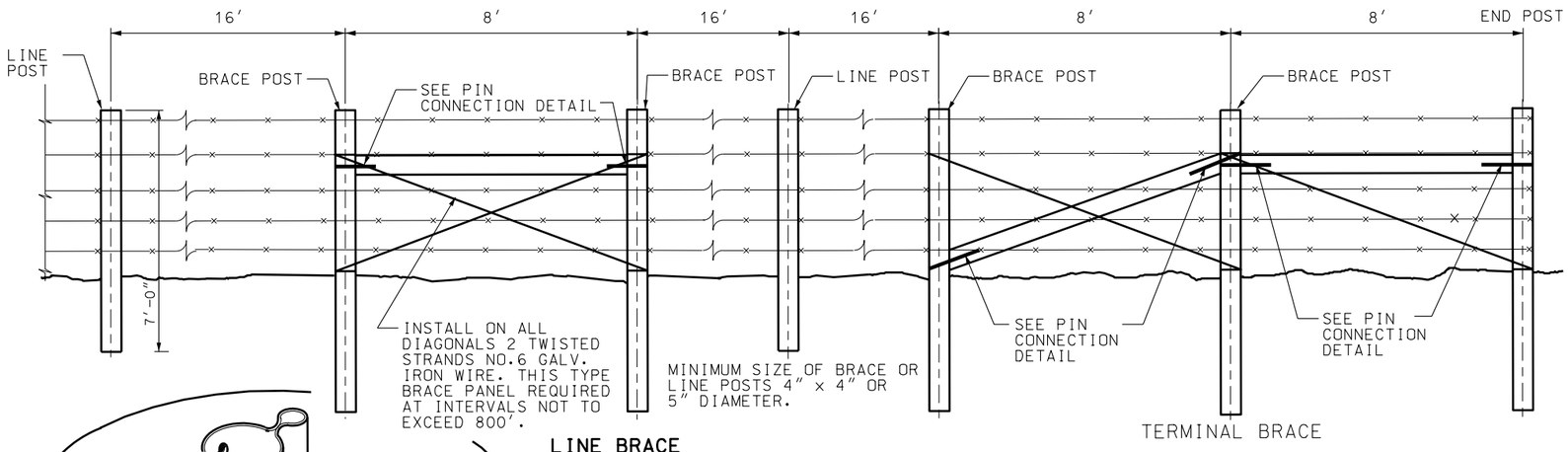

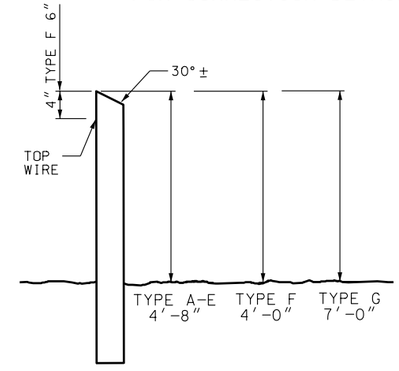

TYPICAL

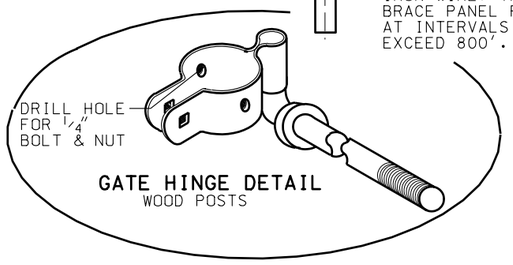

GATE HINGE DETAIL
WOOD POSTS

INSTALLATION WITH WOOD POST
(TYPICAL)

POST SIZE, SPACING AND BRACING FOR TYPES A,B,D,E AND F FENCE THE SAME AS SHOWN IN TYPICAL INSTALLATION ABOVE. USE TWO STAYS EVENLY SPACED BETWEEN EACH SET OF POSTS.

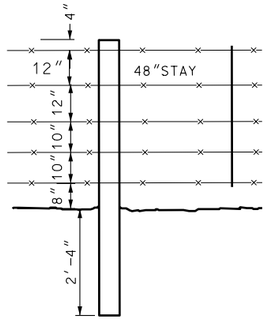

TYPE A

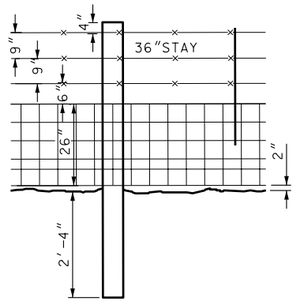

TYPE B

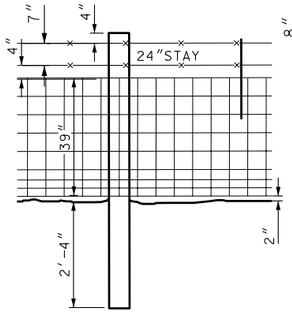

TYPE D

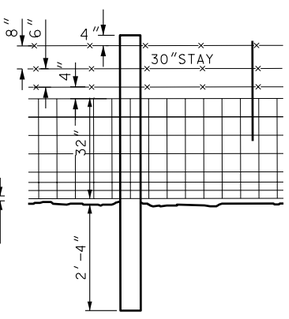

TYPE E

SPACING AND BRACING TYPE F THE SAME AS SHOWN IN TYPICAL INSTALLATION ABOVE. POST MAY BE 6′-4″ IN LENGTH.

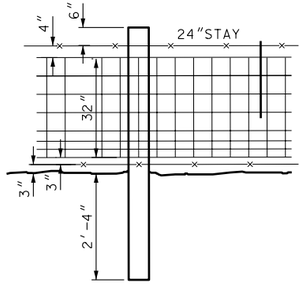

TYPE F
TO BE INSTALLED IN DEER COUNTRY

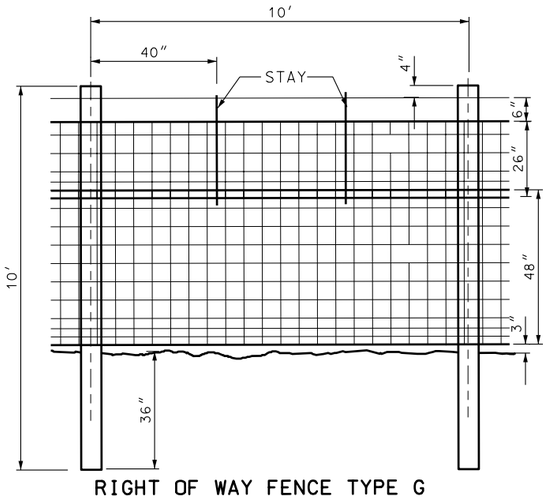

RIGHT OF WAY FENCE TYPE G
(DEER BARRIER)

NOTE: LAP THE 48″ & 26″ MESH WIRE 2″. WIRE TIE OR CLAMP THE 48″ x 26″ WIRE MESH TOGETHER. DO NOT EXCEED 2 FOOT SPACING OF THE CONNECTIONS.

NO.	DATE	APPR.	REMARKS
REVISIONS			

UTAH DEPARTMENT OF TRANSPORTATION
STANDARD DRAWINGS FOR ROAD AND BRIDGE CONSTRUCTION

RECOMMENDED FOR APPROVAL — JAN.01.2005 DATE
CHAIRMAN STANDARDS COMMITTEE
APPROVED — JAN.01.2005 DATE
DEPUTY DIRECTOR

RIGHT OF WAY
FENCE AND GATES
(WOOD POST)

STANDARD DRAWING TITLE

STD DWG
FG 1A

DGN File: N:\Esa\Standard Drawings\Imperial\2005Approved\Fence and Gates\FG01a.dgn
15-DEC-2004

INSTALLATION WITH WOOD POSTS
(TYPICAL.)

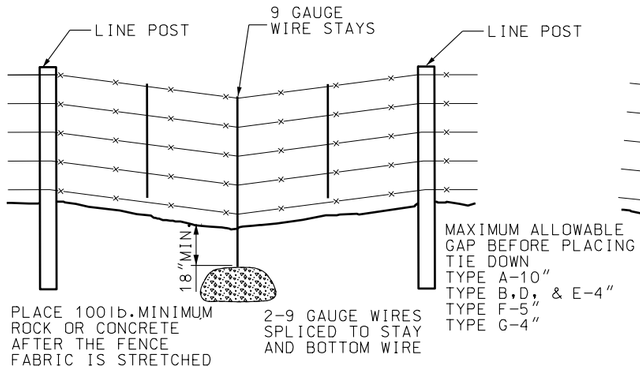

TYPICAL SAG SECTION

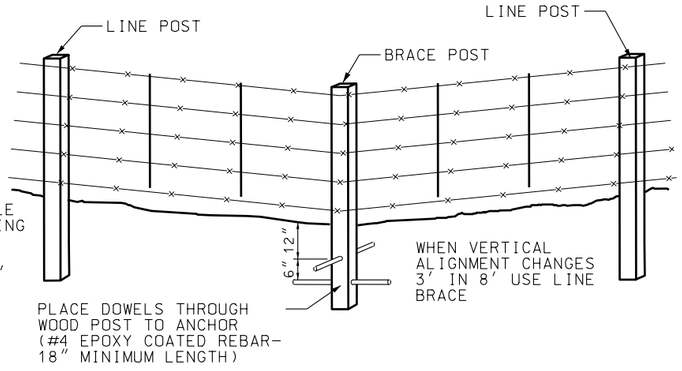

TYPICAL VERTICAL ALIGNMENT CHANGE

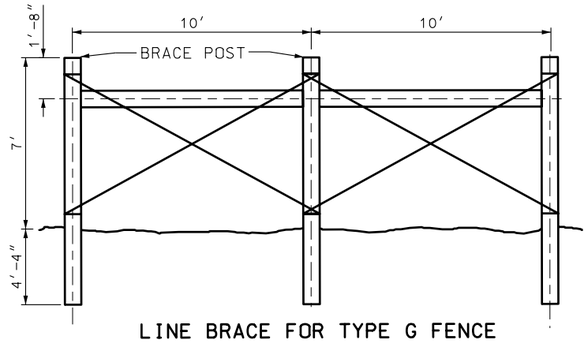

LINE BRACE FOR TYPE G FENCE

BRACE AT INTERWALS
NOT EXCEEDING 400'.

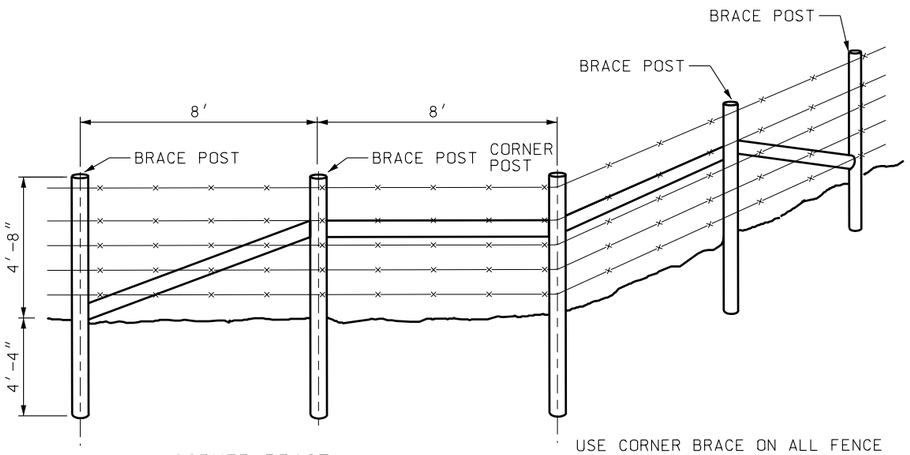

CORNER BRACE

USE CORNER BRACE ON ALL FENCE
LINE DEVIATION WHEN WOOD POSTS
ARE USED

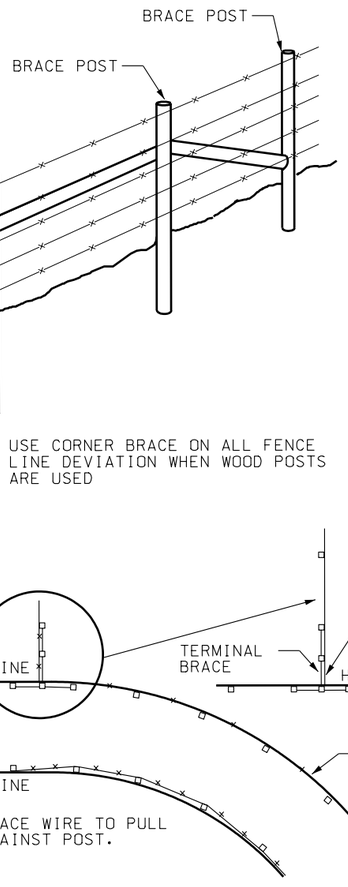

POST & WIRE LOCATION

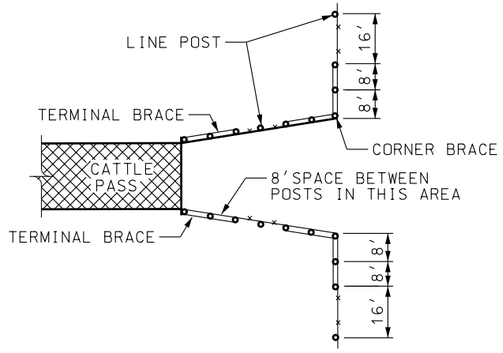

CATTLE PASS FENCE
DETAIL

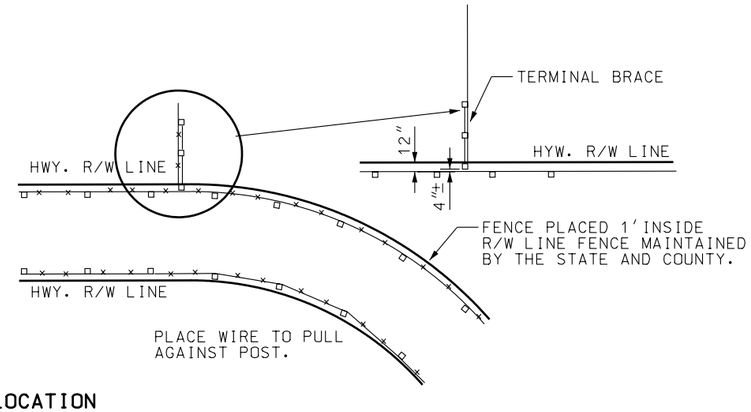

POST & WIRE LOCATION

NO.	DATE	APPR.	REMARKS
REVISIONS			

UTAH DEPARTMENT OF TRANSPORTATION
STANDARD DRAWINGS FOR ROAD AND BRIDGE CONSTRUCTION
SALT LAKE CITY, UTAH

RECOMMENDED FOR APPROVAL — JAN.01,2005 DATE
CHAIRMAN STANDARDS COMMITTEE
APPROVED — JAN.01,2005 DATE
DEPUTY DIRECTOR

RIGHT OF WAY
FENCE AND GATES
(WOOD POST)
STANDARD DRAWING TITLE

STD DWG
FG 1B

DGN File:N:\Esd\Standard_Drawings\Imperial\2005Approved\Fence and Gates (FG)\fg01b.dgn
15-DEC-2004

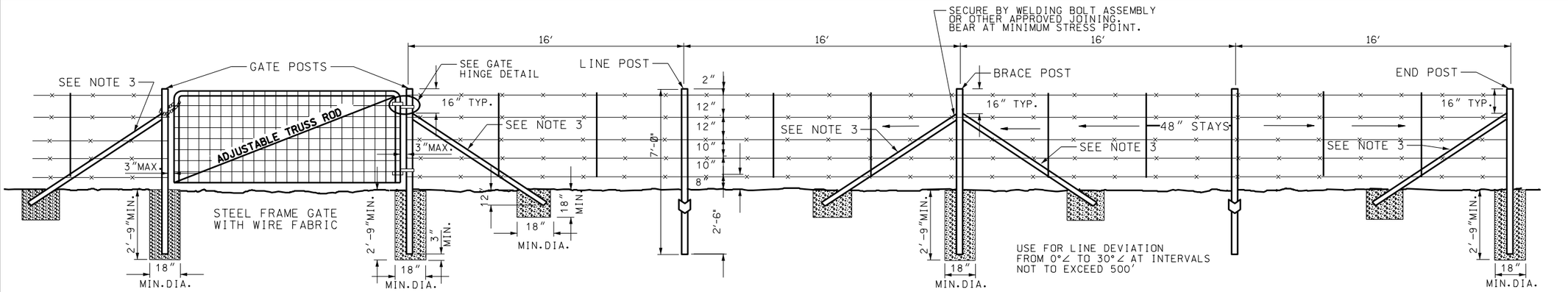

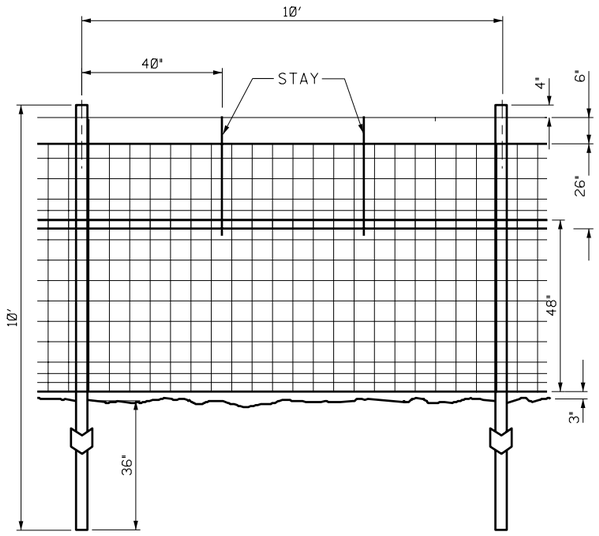

RIGHT OF WAY FENCE TYPE G (DEER BARRIER)

FOR FENCETYPES A, B, D, E AND F POST SIZE, SPACING AND BRACING ARE AS SHOWN IN TYPICAL INSTALLATION ABOVE. SPACE 2 STAYS EVENLY BETWEEN EACH SET OF POSTS.

INSTALLATION WITH METAL POSTS
(TYPICAL)

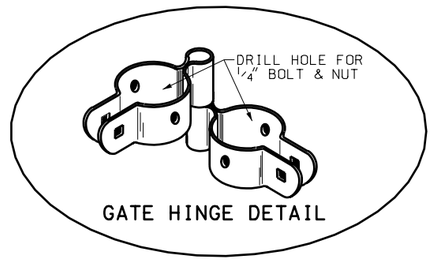

GATE HINGE DETAIL

NOTES:

1. SET METAL POSTS IN CLASS "B" CONCRETE.

2. LINE POSTS FOR TYPE A,B,D,,E & F FENCE
   A-TEE CHANNELS OR "Y" OR "U" SECTIONS, MINIMUM WEIGHT 1.33 lb/ft. ON LENGTH.
   B-STEEL PIPES,1.900" OUTSIDE DIAMETER SCHEDULE 40 PIPE, WEIGHT 2.72 lb/ft OF LENGTH OR HIGH TENSILE TRIPLE COATED STEEL PIPE, WEIGHT 2.23 lb/ft OF LENGTH.
   C-ALTERNATE LINE POSTS APPROVED BY THE ENGINEER TO HAVE A MINIMUM RESISTING SECTION MODULUS OF 0.32" PERPENDICULAR AND 0.12" PARALLEL TO THE FENCE LINE. ANCHOR PLATES TO POSTS, MINIMUM SURFACE AREA OF 20", MINIMUM 18 GAUGE THICKNESS AND MINIMUM WEIGHT 0.67 lb/EACH

3. BRACE AND CORNER PSTS (ASTM A 36)
   A-BRACE AND CORNER POSTS FOR TYPE A,B,D,E & F FENCES USE 2 1/2"x 2 1/2"x 1/4" ANGLES, MINIMUM WEIGHT 4.10 lb/ft.
   B-BRACES FOR TYPE A,B,D,E& F FENCES, USE 2"x 2" x 1/4" ANGLES, MINIMUM WEIGHT 3.19 lb/ft.
   C-TYPE G: PIPE FOR CORNER AND BRACE POSTS, USE 2.375" OUTSIDE DIAMETER, WEIGHT 3.65 lb/ft. OR HIGH TENSILE TRIPLE COATED STEEL, 2.375" OUTSIDE DIAMETER WEIGHT 3.11 lb/ft.

4. LINE POSTS FOR TYPE A,B,D,E & F FENCE: 7'-0" LENGTH
   LINE POSTS FOR TYPE G FENCE: 10'-0"

5. TERMINATE MESH AND BARBER WIRE AT EACH CORNER POST.

6. USE CORNER POST BRACES ON ALL FENCE LINE DEVIATIONS GREATER THAN 30°. USE CORNER POST BRACES ON TYPE G FENCE WITH DEVIATIONS GREATER THAN 15°.

7. GALVANIZE METAL PER (ASTM A 702) OR PAINTED (ASTM A 123)

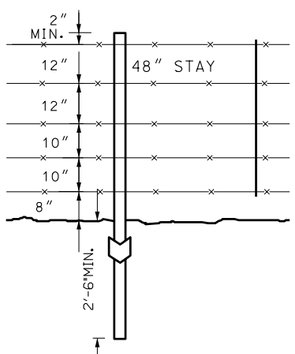

TYPE A

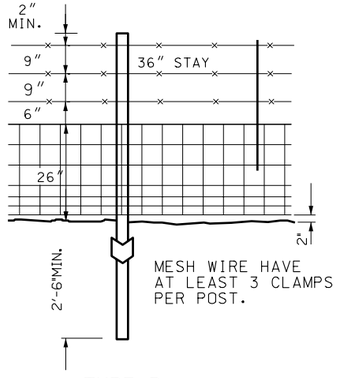

TYPE B

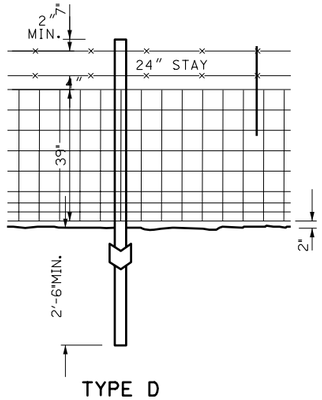

TYPE D

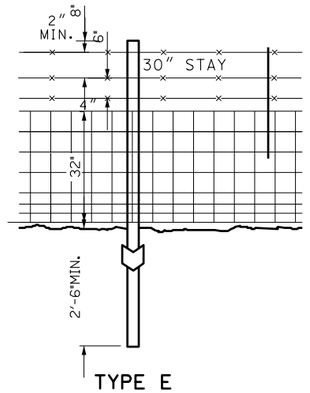

TYPE E

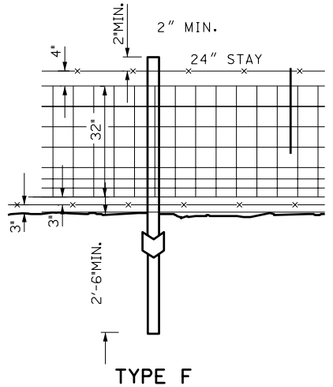

TYPE F

TO BE INSTALLED IN DEER COUNTRY

NO.	DATE	APPR.	REMARKS
			REVISIONS

UTAH DEPARTMENT OF TRANSPORTATION
STANDARD DRAWINGS FOR ROAD AND BRIDGE CONSTRUCTION
SALT LAKE CITY, UTAH

RECOMMENDED FOR APPROVAL — JAN.01.2005 DATE
CHAIRMAN STANDARDS COMMITTEE
APPROVED — JAN.01.2005 DATE
DEPUTY DIRECTOR

RIGHT OF WAY FENCE AND GATES (METAL POST)

STANDARD DRAWING TITLE

STD DWG
FG 2A

DGN File:N:\Esd\Standard Drawings\Imperial\2005Approved\Fence and Gates (FG)\Fg02a.dgn
15-DEC-2004

INSTALLATION WITH METAL POSTS
(TYPICAL)

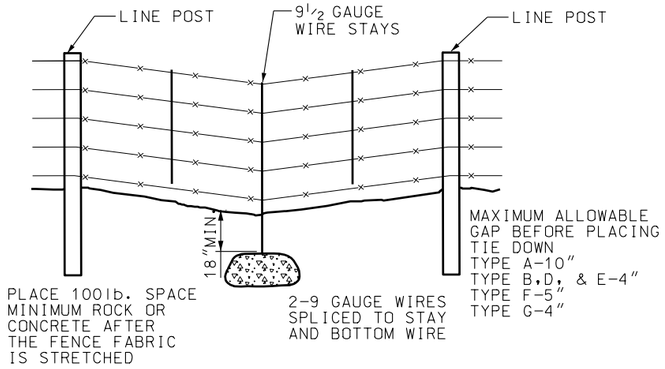

TYPICAL SAG SECTION

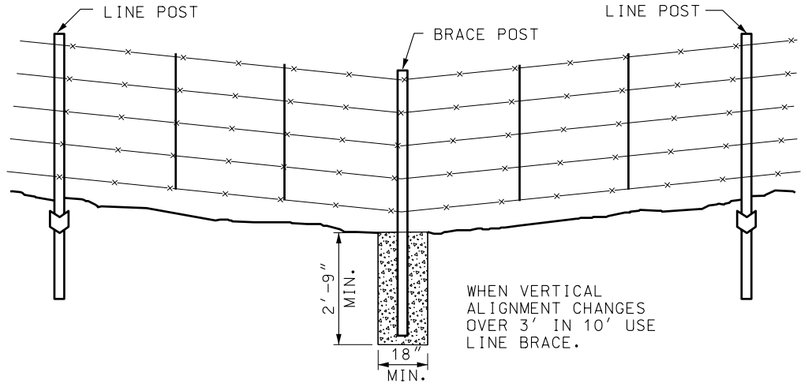

TYPICAL VERTICAL ALIGNMENT CHANGE

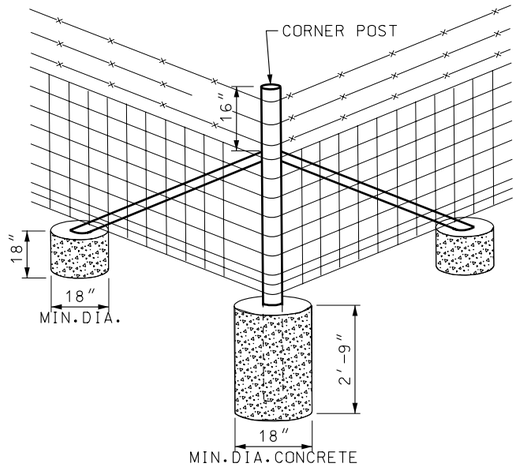

CORNER BRACE
SEE NOTE #6 STD DWG FG 2A

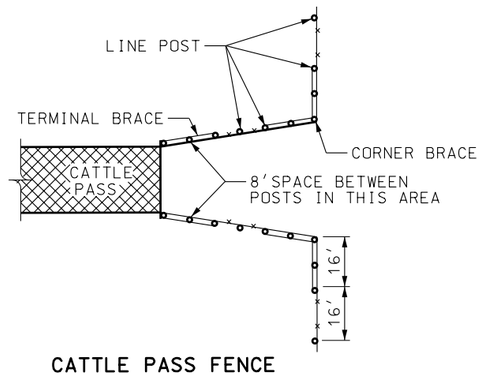

CATTLE PASS FENCE DETAIL

DEER COUNTRY
NOTE: LAP THE 47″ & 26″ MESH WIRE 2″. TIE OR CLAMP 47″ & 26″ MESH WIRE TOGETHER, THE SPACING NOT TO EXCEED 2′-0″ SPACING OF CONNECTINGS.

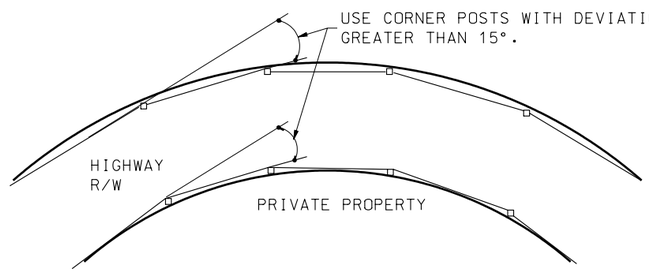

DEER BARRIER ON CURVES
SEE NOTE #6 STD DWG FG 2A

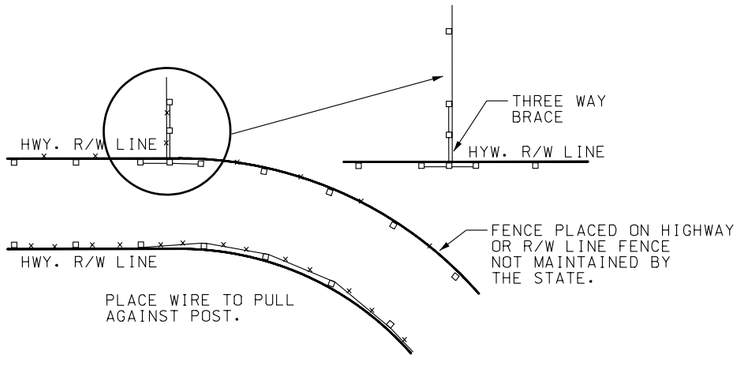

POST & WIRE LOCATION

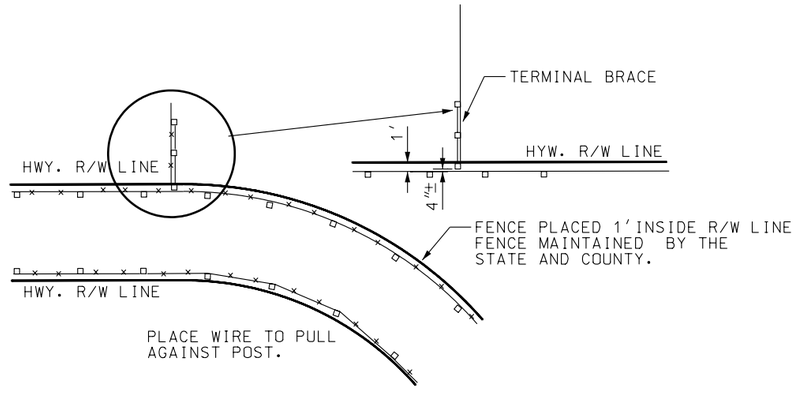

POST & WIRE LOCATION

REVISIONS

NO.	DATE	APPR.	REMARKS

UTAH DEPARTMENT OF TRANSPORTATION
STANDARD DRAWINGS FOR ROAD AND BRIDGE CONSTRUCTION
SALT LAKE CITY, UTAH

RECOMMENDED FOR APPROVAL — JAN.01.2005 DATE
CHAIRMAN STANDARDS COMMITTEE
APPROVED — JAN.01.2005 DATE
DEPUTY DIRECTOR

RIGHT OF WAY FENCE AND GATES (METAL POST)

STANDARD DRAWING TITLE

STD DWG
FG 2B

DGN File:N:\Est\Standard Drawings\Imperial\2005Approved\Fence and Gates (FG)\fg02b.dgn
15-DEC-2004

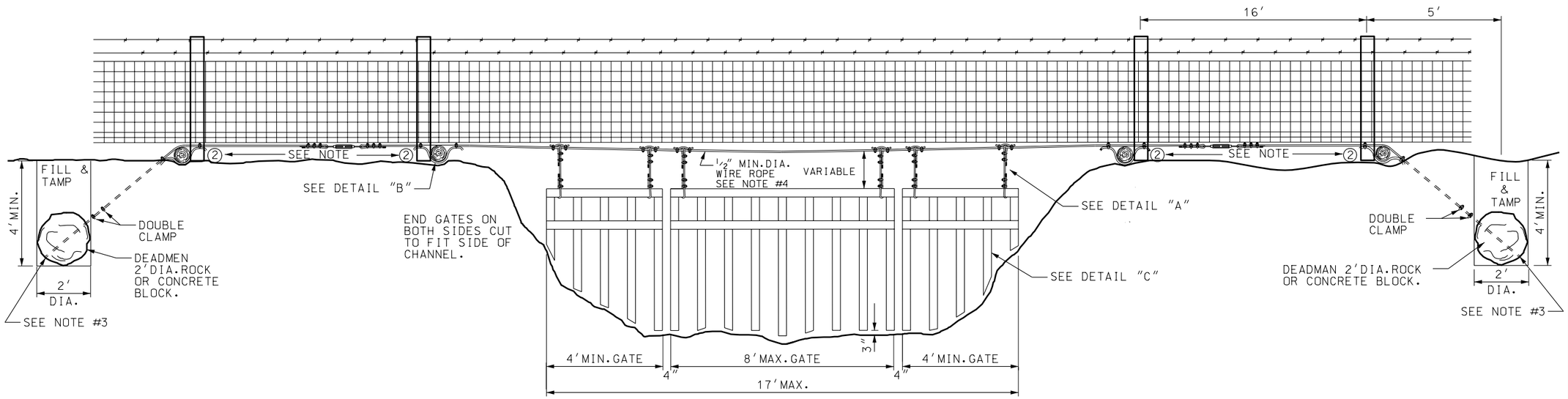

INSTALLATION DETAIL

DETAIL "A"

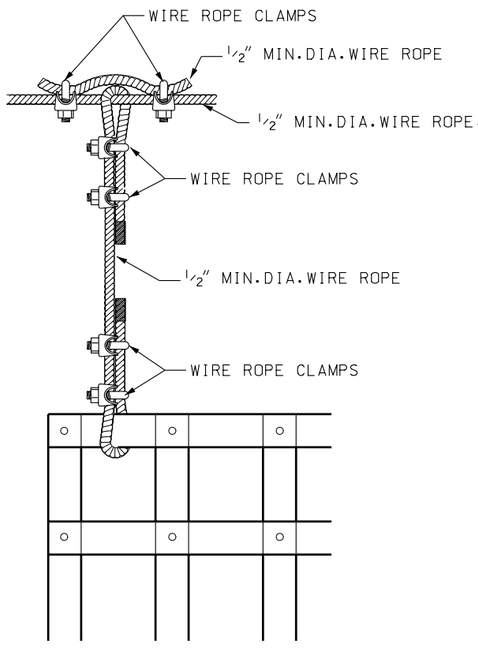

DETAIL "B"

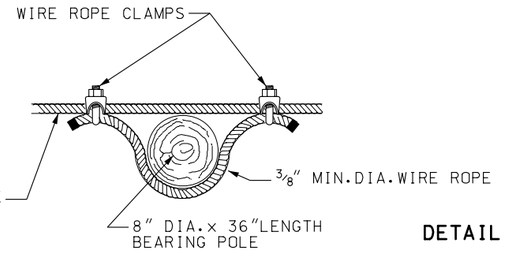

DETAIL "C"

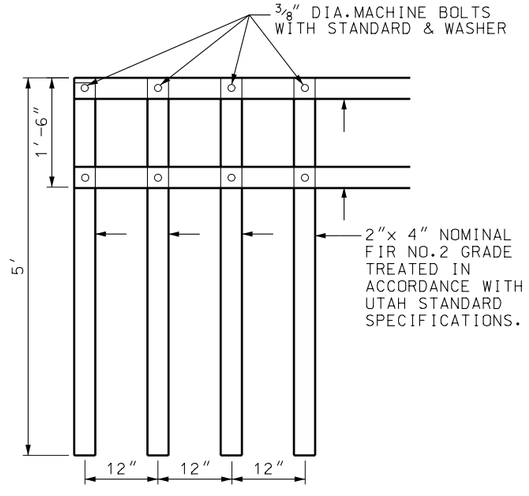

DETAIL "D"

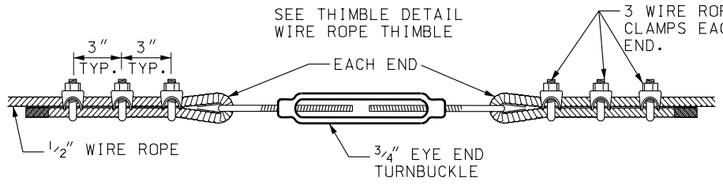

THIMBLE DETAIL

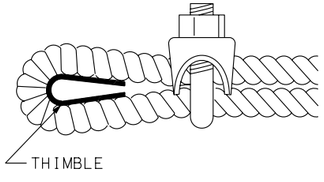

NOTES:

1. INSTALL BEARING POLES,DEADMAN AND TURN BUCKLE THE SAME ON BOTH SIDES ON THE CHANNEL.
2. INSTALL WIRE ROPE ON THE UPSTREAM SIDE OF THE FENCE POSTS.
3. WRAP WIRE ROPE AROUND ROCK AND CLAMP WITH A DOUBLE CLAMP.
4. USE ½″ DIA. WIRE 6″x 12″ WITH A BREAKING STRENGTH OF 10,000 lbs.

REVISIONS

NO.	DATE	APPR.	REMARKS
1	02/24/05	B.A.	CORRECTED TYPOGRAPHICAL ERRORS.

UTAH DEPARTMENT OF TRANSPORTATION
STANDARD DRAWINGS FOR ROAD AND BRIDGE CONSTRUCTION
SALT LAKE CITY, UTAH

RECOMMENDED FOR APPROVAL — FEB.24,2005 DATE
CHAIRMAN STANDARDS COMMITTEE APPROVED — FEB.24,2005 DATE
DEPUTY DIRECTOR

SWING GATE TYPE I FOR GATES LESS THAN 17′

STANDARD DRAWING TITLE

STD DWG
FG 3

DGN File:N:\Esa\Standard Drawings\Imperial\2005Approved\xChange\Approved\fg03.dgn
14-MAR-2005

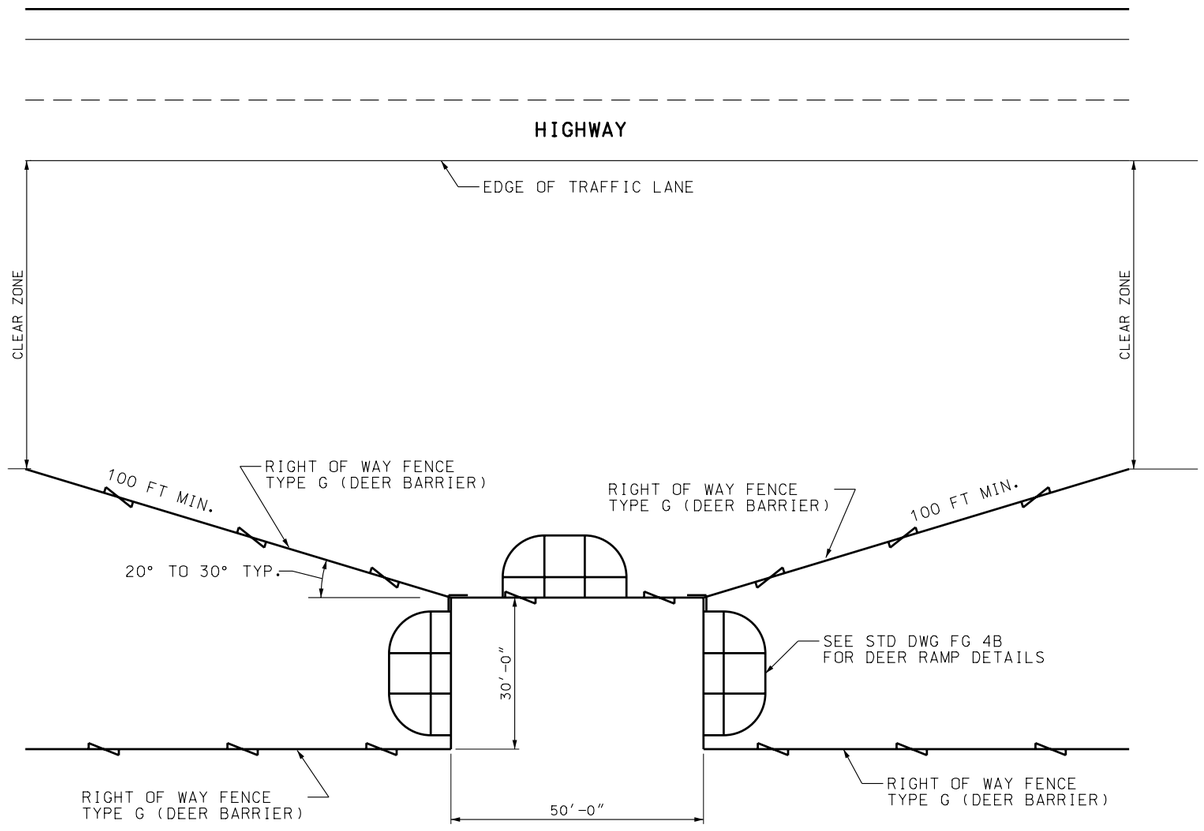

HIGH MIGRATORY DEER CROSSING DETAIL

NOTE: DESIGN MAY BE MODIFIED AS GROUND CONDITIONS DICTATE.

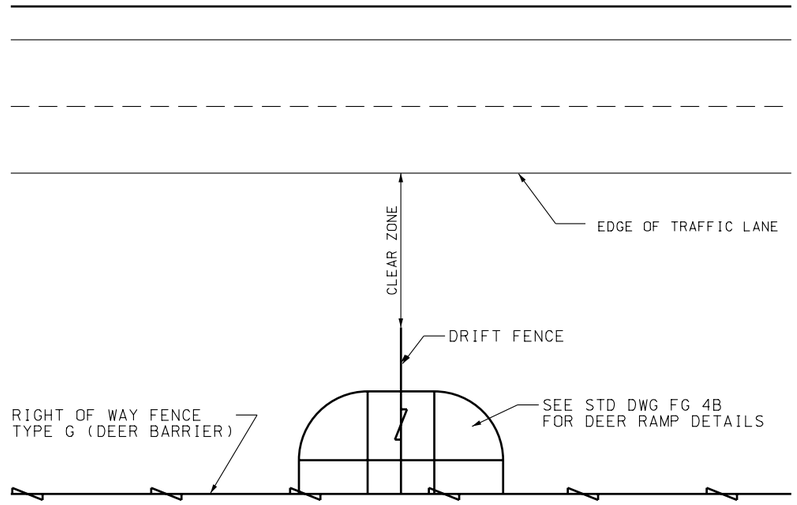

TYPICAL DEER CROSSING DETAIL

NOTE: DESIGN MAY BE MODIFIED AS GROUND CONDITIONS DICTATE.

REVISIONS

NO.	DATE	APPR.	REMARKS
1	04/28/05	MAP	NEW DRAWING. REPLACES FG 4.

UTAH DEPARTMENT OF TRANSPORTATION
STANDARD DRAWINGS FOR ROAD AND BRIDGE CONSTRUCTION
SALT LAKE CITY, UTAH

RECOMMENDED FOR APPROVAL — APR.28.2005 DATE
CHAIRMAN STANDARDS COMMITTEE APPROVED — APR.28.2005 DATE
DEPUTY DIRECTOR

DEER CROSSING DETAILS

STANDARD DRAWING TITLE

STD DWG
FG 4A

DGN File: L:\Standard_Drawings\Imperial\2005Approved\Change2Approved\fg4A.dgn
18-MAY-2005

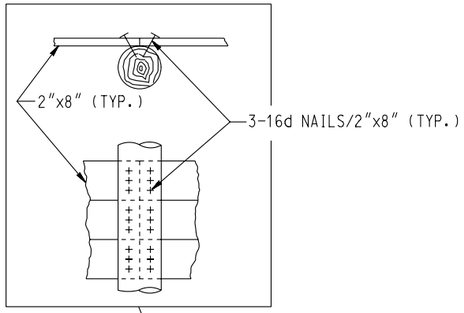

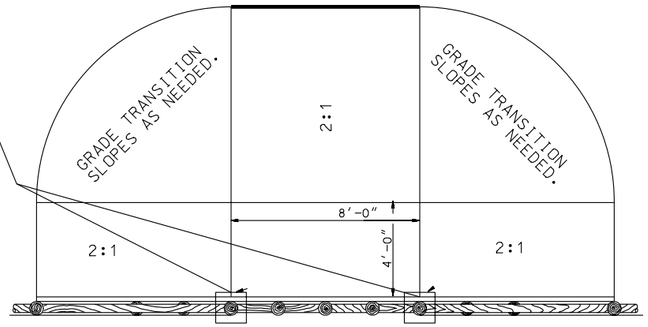

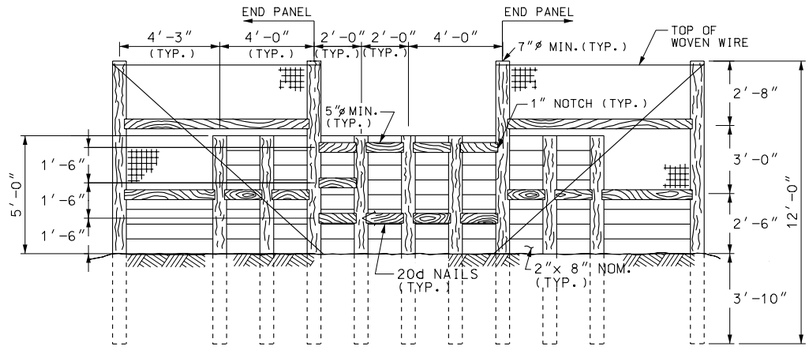

DEER RAMP DETAIL

NOTE: USE 2" x 8" TIMBER FOR ALL HORIZONTAL AND LONGITUDINAL LAGGING.

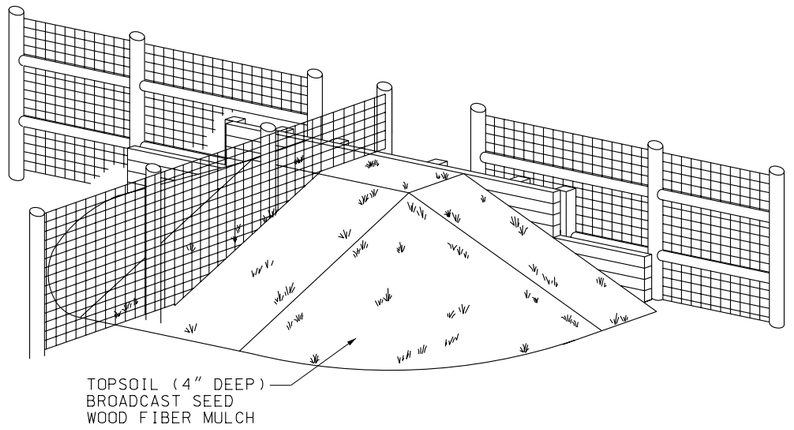

ISOMETRIC VIEW

NOTE: THE HIGH MIGRATORY DEER CROSSING DOES NOT USE DRIFT FENCE DOWN CENTER OF THE DEER RAMPS.

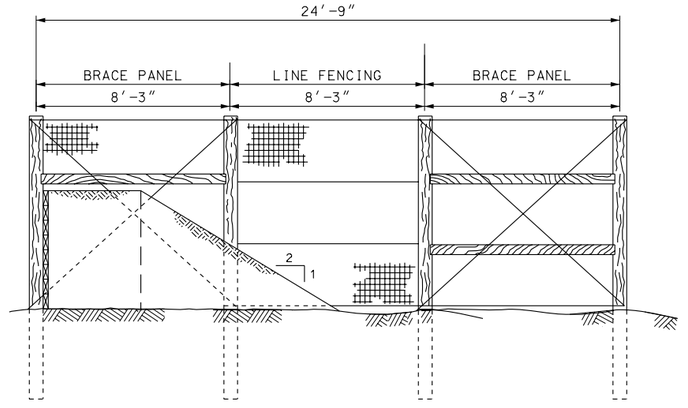

DRIFT FENCE DETAIL

REVISIONS

NO.	DATE	APPR.	REMARKS
1	04/28/05	MAP	NEW DRAWING.

UTAH DEPARTMENT OF TRANSPORTATION
STANDARD DRAWINGS FOR ROAD AND BRIDGE CONSTRUCTION
SALT LAKE CITY, UTAH

RECOMMENDED FOR APPROVAL — APR.28,2005 DATE

CHAIRMAN STANDARDS COMMITTEE APPROVED — APR.28,2005 DATE

DEPUTY DIRECTOR

DEER RAMP DETAILS

STANDARD DRAWING TITLE

STD DWG
FG 4B

DGN File:L:\Standard Drawings\Imperial\2005Approved\Change2Approved\fg4B.dgn
10-MAY-2005

NOTES:

1. ON BOTH SIDES OF CHANNEL INSTALL BEARING PIPES, CONCRETE BLOCKS AND TURN BUCKLES.
2. INSTALLED WIRE ROPE ON THE UPSTREAM SIDE OF THE POSTS. USE 1/2" DIA. WIRE 6"x 12" WITH BREAKING STRENGTH OF 10,000 lbs.

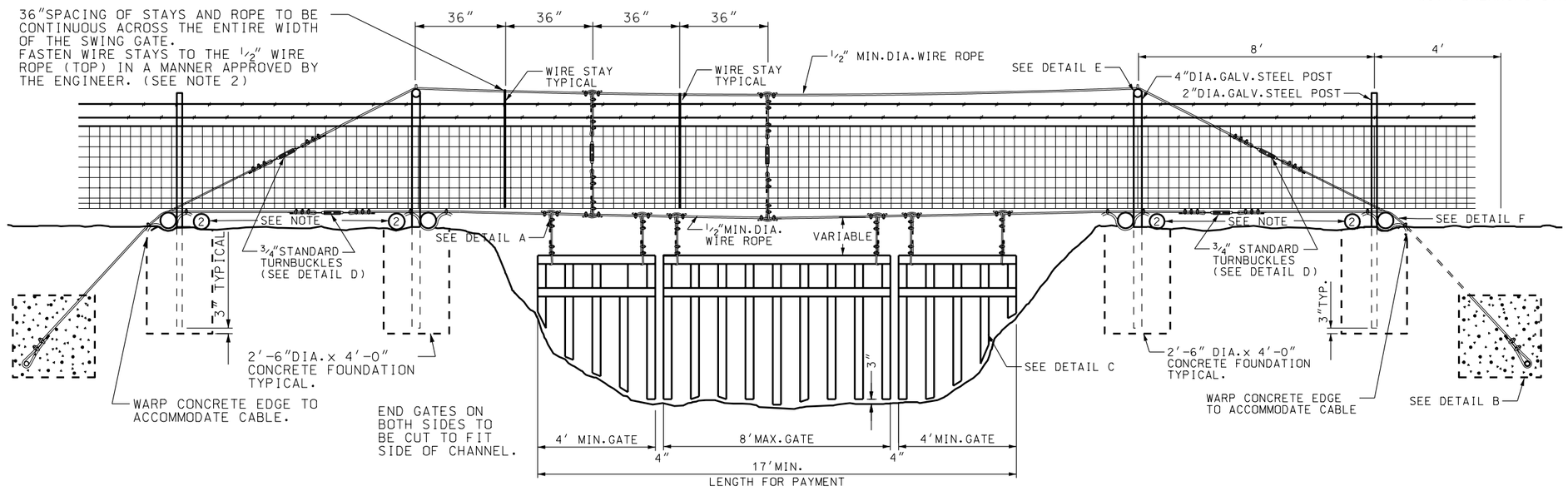

INSTALLATION DETAIL

DETAIL G

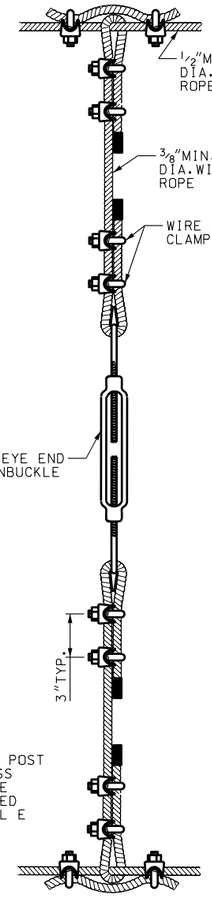

DETAIL B

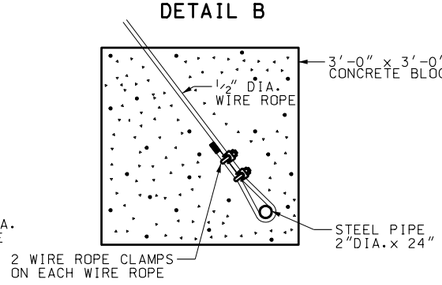

DETAIL A

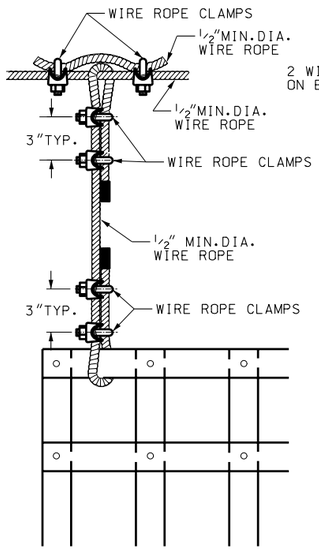

DETAIL D

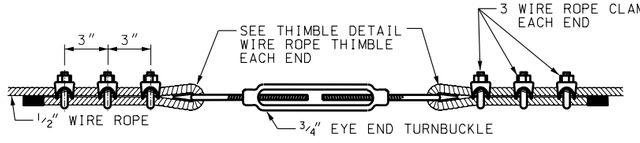

DETAIL F

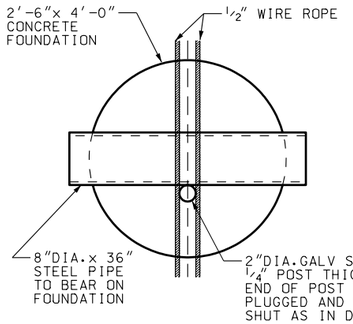

DETAIL C

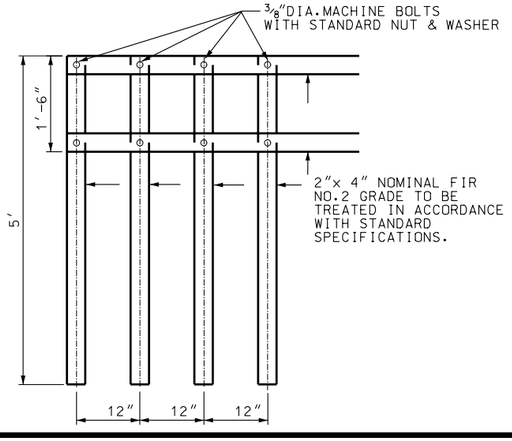

THIMBLE DETAIL

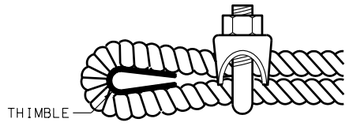

DETAIL E

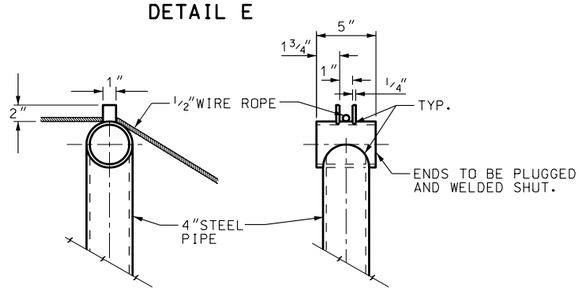

REVISIONS			
NO.	DATE	APPR.	REMARKS

UTAH DEPARTMENT OF TRANSPORTATION
STANDARD DRAWINGS FOR ROAD AND BRIDGE CONSTRUCTION
SALT LAKE CITY, UTAH

RECOMMENDED FOR APPROVAL — JAN.01.2005 DATE
CHAIRMAN STANDARDS COMMITTEE
APPROVED — JAN.01.2005 DATE
DEPUTY DIRECTOR

SWING GATES TYPE II FOR GATES WIDER THAN 17'

STANDARD DRAWING TITLE

STD DWG
FG 5

DGN File:N:\Esd\Standard_Drawings\Imperial\2005Approved\Fence and Gates (FG)\fg05.dgn
15-DEC-2004

NOTES:

1. POSTS: SCHEDULE 40 PIPE. TRIPLE COATED HIGH TENSILE STEEL PIPE OR ROLL-FORMED C-SECTION OF THE SIZE SHOWN IN THE CHART AND AS DEFINED IN THE STANDARD SPECIFICATION. WEIGHT IN lb/ft WITH TOLERANCE OF 5 PERCENT. OTHER TYPES OF POSTS WITH EQUAL OR GREATER SECTION MODULUS MAY BE USED IF APPROVED, IN ADVANCE, BY THE ENGINEER.
2. FABRIC HEIGHTS LESS THAN 5′: TRUSS RODS AND BRACES NOT REQUIRED.

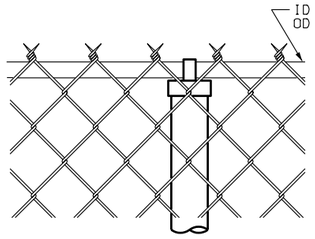

TWISTED & BARBED SELVAGE
TYPE I

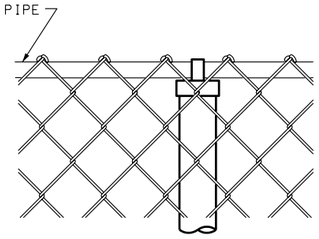
KNUCKLED SELVAGE
TYPE II

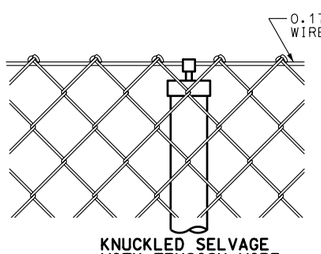

KNUCKLED SELVAGE
WITH TENSION WIRE
TYPE III

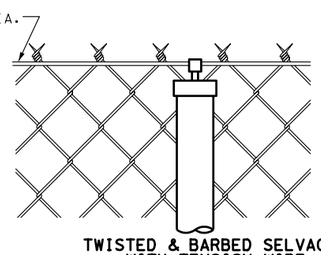
TWISTED & BARBED SELVAGE
WITH TENSION WIRE
TYPE IV

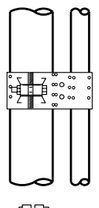
TOP
GATE HINGE

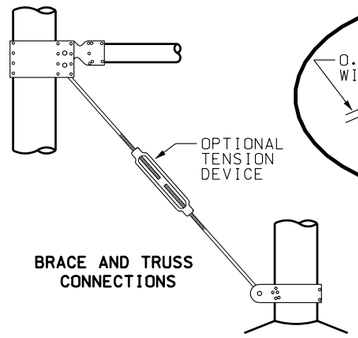

BRACE AND TRUSS
CONNECTIONS

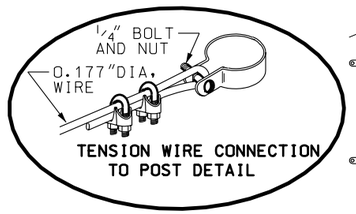

TENSION WIRE CONNECTION
TO POST DETAIL

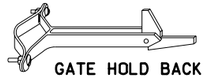
GATE HOLD BACK
DETAIL

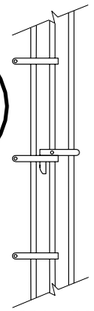
DROP ROD
ASSEMBLY

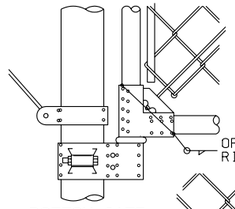
BOTTOM GATE
HINGE AND GATE
DETAILS

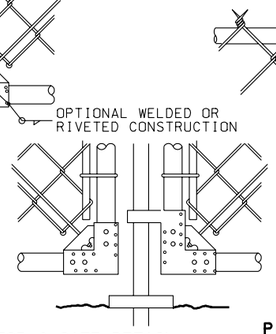

CENTER GATE STOP & GATE DETAIL

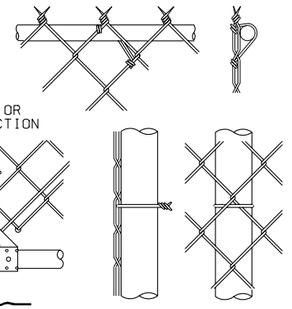
PIPE POST TIE

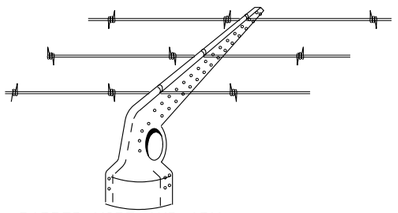
BARBED WIRE AND ARM
(WHEN REQUIRED)

TYPICAL MULTIPLE BAY SEGMENT

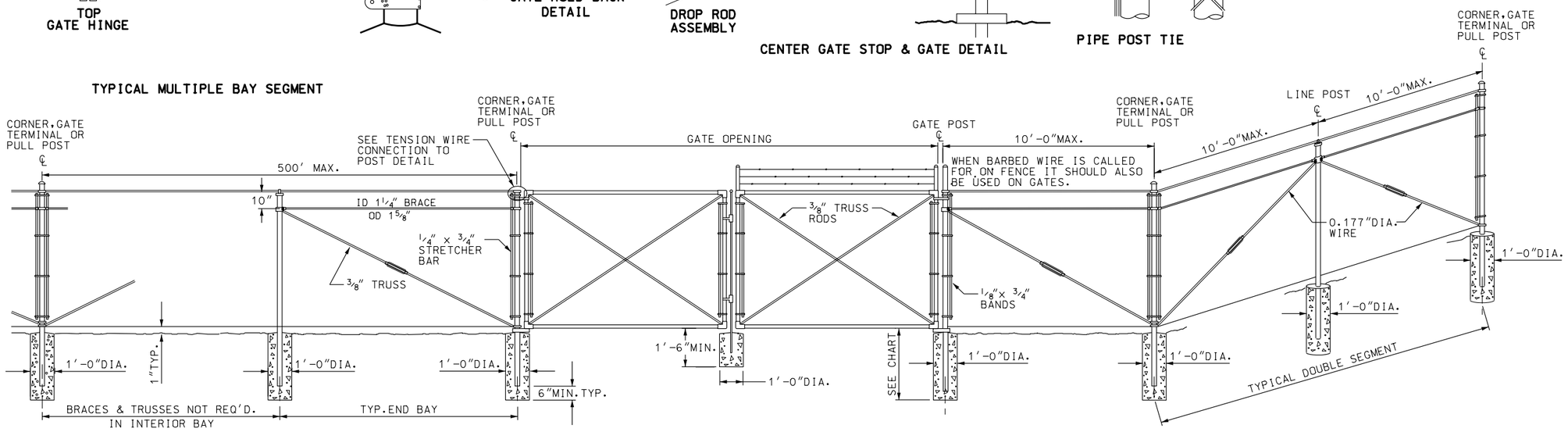

HEIGHT	GATE OPENING	GATE POST	GATE FRAME
UNDER 6′	SINGLE TO 6′ OR DOUBLE TO 12′	2″	1″
	SINGLE OVER 6′ TO 8′ OR DOUBLE OVER 12′ TO 16′	2½″	1½″
	SINGLE OVER 8′ TO 12′ OR DOUBLE 16′ TO 24′	3½″	
6′ AND OVER *	SINGLE TO 6′ OR DOUBLE TO 12′	2½″	1½″
	SINGLE OVER 6′ TO 13′ OR DOUBLE OVER 12′ TO 24′	3½″	
	SINGLE OVER 13′ TO 18′ OR DOUBLE OVER 24′ TO 36′	6″	
	SINGLE OVER 18′ OR DOUBLE OVER 36′	8″	

* GATES OVER 6′ IN HEIGHT AND WIDER THAN 12′ WILL REQUIRE 3 INDUSTRIAL PRESSED STEEL HINGES.

HEIGHT OF FABRIC	DEPTH OF POSTS	LENGTH OF END CORNER OR PULL POSTS	LENGTH OF LINE POSTS	SIZE OF POSTS								
				END, CORNER & PULL POSTS				LINE POST MIN. SIZE				
				NOM. SIZE	OUTSIDE DIA.	PIPE WEIGHT ASTM A 120	PIPE WEIGHT TRIPLE COAT	NOM. SIZE	OUTSIDE DIA.	PIPE WEIGHT ASTM A 120	PIPE WEIGHT TRIPLE COAT	OUTSIDE DIMENSIONS C-SECTION	WT/FT
7′	3′	10′	9′-8″	2½″	2.875″	5.79	4.64	2″	2.375″	3.65	3.11	1.875 x 1.625	2.28
6′	3′	9′	8′-8″	2″	2.375″	3.65	3.11	1½″	1.900″	2.72	2.23	1.875 x 1.625	1.85
5′	3′	8′	7′-8″	2″	2.375″	3.65	3.11	1½″	1.900″	2.72	2.23	1.875 x 1.625	1.85
4′	2′	6′	5′-8″	2″	2.375″	3.65	3.11	1½″	1.900″	2.72	2.23	1.875 x 1.625	1.85
3′	2′	5′	4′-8″	2″	2.375″	3.65	3.11	1½″	1.900″	2.72	2.23	1.875 x 1.625	1.85

REVISIONS

NO.	DATE	APPR.	REMARKS

UTAH DEPARTMENT OF TRANSPORTATION
STANDARD DRAWINGS FOR ROAD AND BRIDGE CONSTRUCTION
SALT LAKE CITY, UTAH

RECOMMENDED FOR APPROVAL — JAN.01.2005 DATE — DEPUTY DIRECTOR

APPROVED — JAN.01.2005 DATE — CHAIRMAN STANDARDS COMMITTEE

CHAIN LINK FENCE

STANDARD DRAWING TITLE

STD DWG
FG 6

DGN File:N:\Esd\Standard_Drawings\Imperial\2005Approved\Fence and Gates (FG)\Fg06.dgn
15-DEC-2004

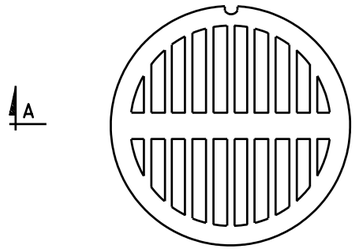

GRATED COVER PLAN

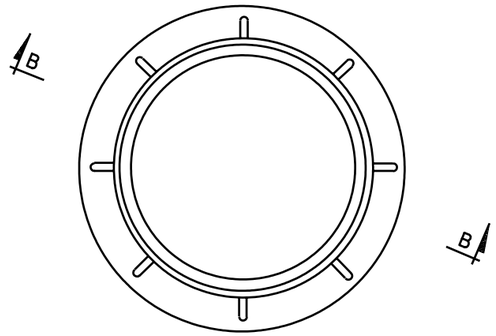

FRAME PLAN

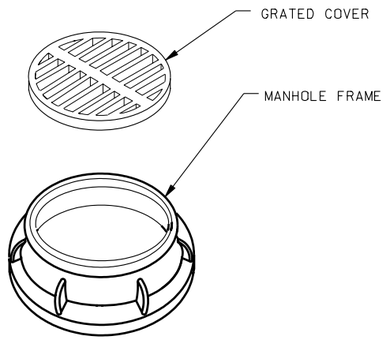

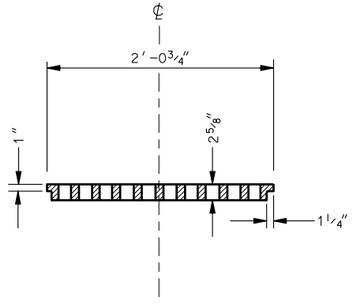

SECTION A-A

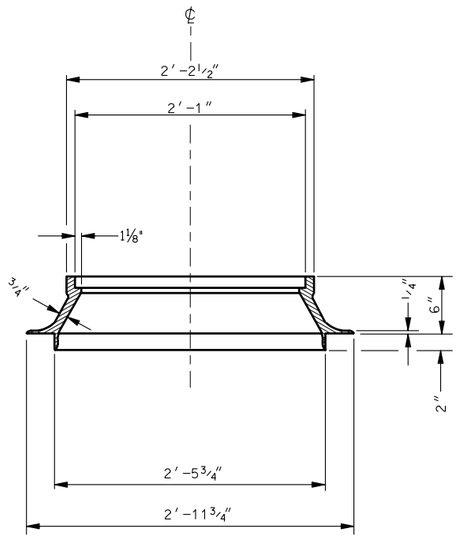

SECTION B-B

NOTES:

1. MANHOLE FRAME AND COVER FURNISHED IN CAST GRAY IRON CONFORMING TO AASHTO DESIGNATION M 105, CLASS 30B.
2. USE PRECAST CONCRETE GRADE RINGS TO ACHIVE FUNISH GRADE ELEVATION. PRECAST GRADE ARE FURNISHED IN HEIGHTS OF 4″, 6″ AND 8″. TOTAL HEIGHT OF GRADE RINGS NOT TO EXCEED 1′-0″. CONFORM ALL PRECAST GRADE RINGS TO AASHTO DESIGNATION M 199.
3. DIMENSION OF GRATE OPENINGS MAY VARY AMONG MANUFACTURES. SUBMIT SHOP DRAWING FOR APPROVAL PRIOR TO INSTALLATION.
4. ESTIMATED WEIGHT OF FRAME AND COVER 385 LBS.

DESIGN DATA

MS 18 (HS 20) OR INTERSTATE ALTERNATE LOADING IN ACCORDANCE WITH CURRENT AASHTO AND INTERIM SPECIFICATIONS.

REVISIONS

NO.	DATE	APPR.	REMARKS

UTAH DEPARTMENT OF TRANSPORTATION
STANDARD DRAWINGS FOR ROAD AND BRIDGE CONSTRUCTION
SALT LAKE CITY, UTAH

RECOMMENDED FOR APPROVAL — JAN.01.2005 DATE — DEPUTY DIRECTOR

CHAIRMAN STANDARDS COMMITTEE APPROVED — JAN.01.2005 DATE

MANHOLE FRAME AND GRATED COVER

STANDARD DRAWING TITLE

STD DWG
GF 1

15-DEC-2004 DGN File:N:\Eash\Standard Drawings\Imperial\2005Approved\Grates Frames and Trash Racks (GF)\gf01.dgn

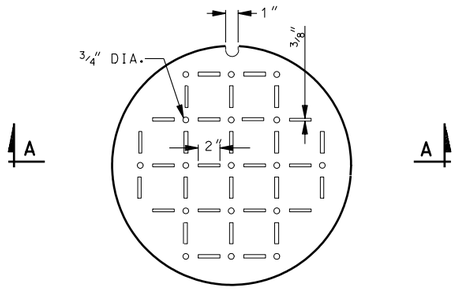

SOLID COVER PLAN

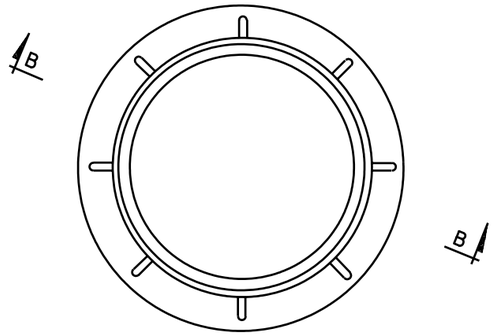

FRAME PLAN

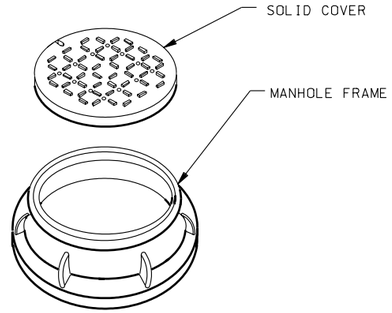

NOTES:

1. FURNISH MANHOLE FRAME AND COVER IN CAST GRAY IRON CONFORMING WITH AASHTO DESIGNATION M 105, CLASS 30B.
2. USE PRECAST CONCRETE GRADE RINGS TO ACHIEVE FINISH GRADE ELEVATION. PRECAST GRADE RING ARE FURNISHED IN HEIGHTS OF 4″,6″ AND 8″. TOTAL HEIGHT OF GRADE RINGS NOT TO EXCEED 1′-0″. ALL PRECAST GRADE RINGS CONFORM WITH AASHTO DESIGNATION M 199.
3. ESTIMATED WEIGHT OF FRAME AND COVER 402 LBS.

DESIGN DATA

MS-18 (HS-20) OR INTERSTATE ALTERNATE LOADING IN ACCORDANCE WITH CURRENT AASHTO AND INTERIM SPECIFICATIONS.

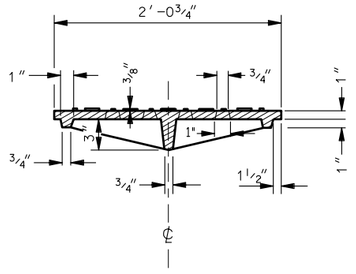

SECTION A–A

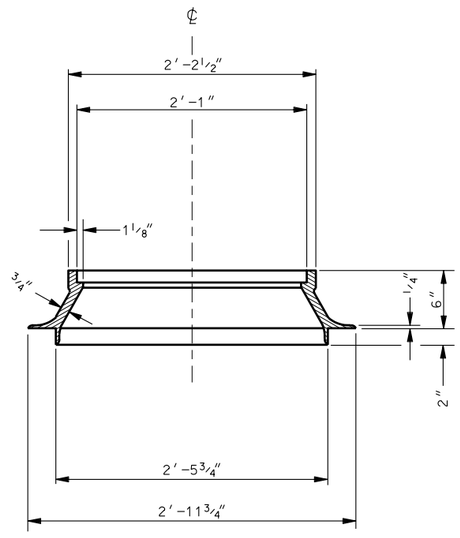

SECTION B–B

REVISIONS

NO.	DATE	APPR.	REMARKS

UTAH DEPARTMENT OF TRANSPORTATION
STANDARD DRAWINGS FOR ROAD AND BRIDGE CONSTRUCTION
SALT LAKE CITY, UTAH

RECOMMENDED FOR APPROVAL — JAN.01.2005 DATE
CHAIRMAN STANDARDS COMMITTEE
APPROVED — JAN.01.2005 DATE
DEPUTY DIRECTOR

MANHOLE FRAME AND SOLID COVER
STANDARD DRAWING TITLE

STD DWG
GF 2

DGN File:N:\Eng\Standard_Drawings\Imperial\2005Approved\Grates Frames and Trash Racks (GF)\gf02.dgn
15-DEC-2004

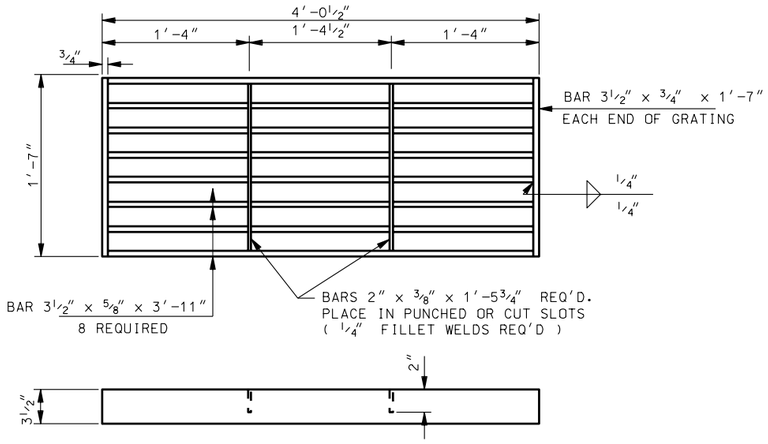

STANDARD GRATING
GRATE WEIGHT: 272 LBS

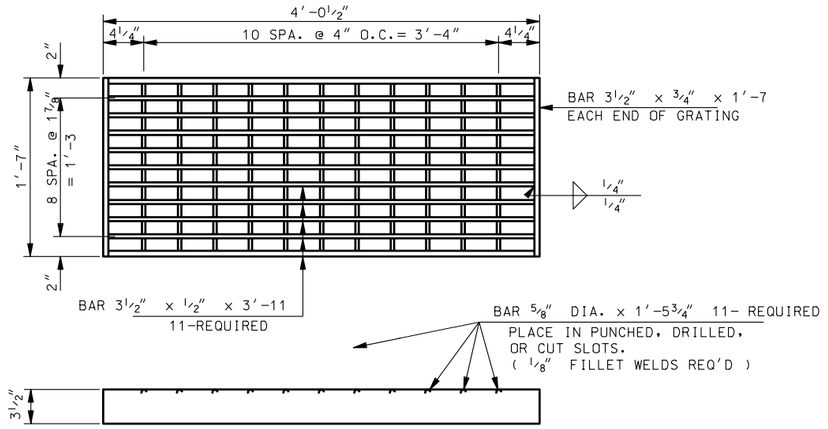

BICYCLE-SAFE GRATING
GRATE WEIGHT: 297 LBS

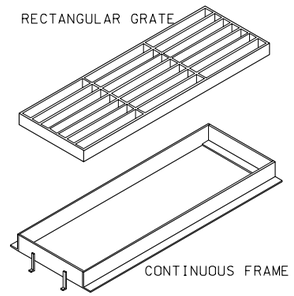

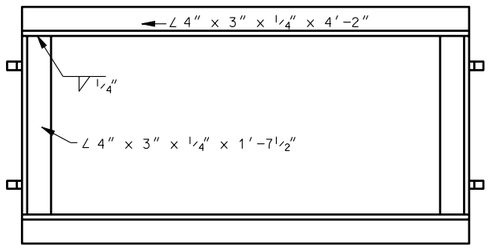

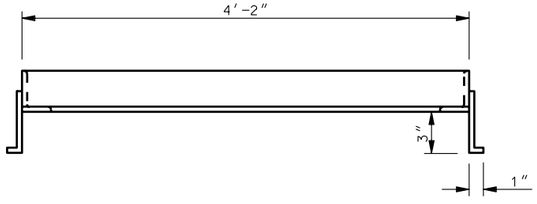

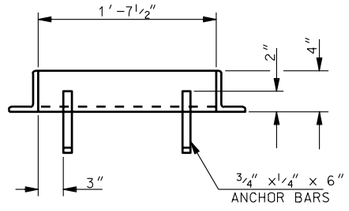

FRAME
FRAME WEIGHT: 68 LBS

NOTES:
1. HOT-DIP GALVANIZE GRATING AND FRAME AFTER FABRICATION IN ACCORDANCE WITH AASHTO DESIGNATION M 111 (ASTM A 123).
2. STRUCTURAL STEEL GRATING: USE STRUCTURAL CARBON STEEL CONFORMING TO AASHTO DESIGNATION M 270, GRADE 36 (ASTM A 709 GRADE 36).
3. SEE ROADWAY PLANS FOR TYPE OF GRATE REQUIRED.
4. ALL JOINTS REQUIRE ¼″ FILLET WELDS UNLESS NOTED OTHERWISE.

DESIGN DATA
MS 18 (HS-20) OR INTERSTATE ALTERNATE LOADING IN ACCORDANCE WITH CURRENT ASSHTO AND INTERIM SPECIFICATIONS.

STRUCTURAL STEEL: fs = 20,000 psi

REVISIONS

NO.	DATE	APPR.	REMARKS

UTAH DEPARTMENT OF TRANSPORTATION
STANDARD DRAWINGS FOR ROAD AND BRIDGE CONSTRUCTION
SALT LAKE CITY, UTAH

RECOMMENDED FOR APPROVAL — JAN.01.2005 DATE
CHAIRMAN STANDARDS COMMITTEE
APPROVED — JAN.01.2005 DATE
DEPUTY DIRECTOR

RECTANGULAR GRATE AND FRAME
STANDARD DRAWING TITLE

STD DWG
GF 3

DGN File:N:\East\Standard Drawings\Imperial\2005Approved\Grates Frames and Trash Racks (GF)\gf03.dgn
15-DEC-2004

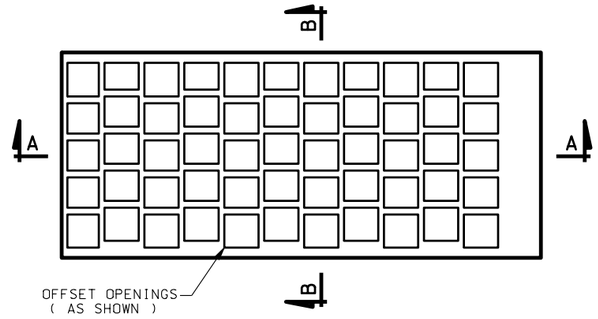

GRATE
WEIGHT: 266 LBS

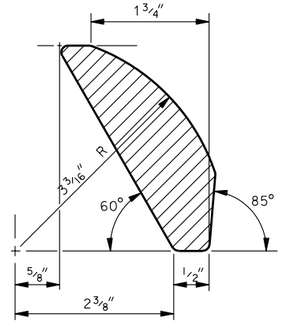

DETAIL "A"

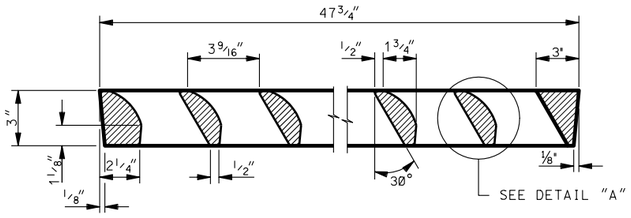

SECTION A-A

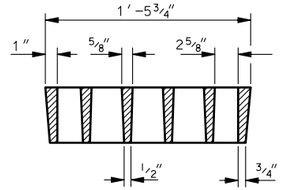

SECTION B-B

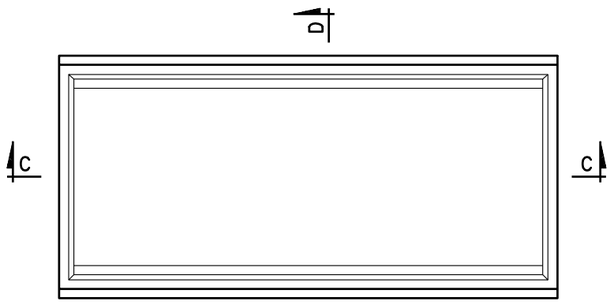

FRAME
WEIGHT: 160 LBS

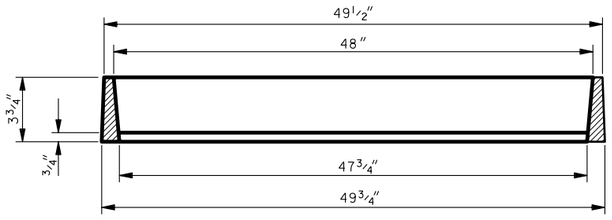

SECTION C-C

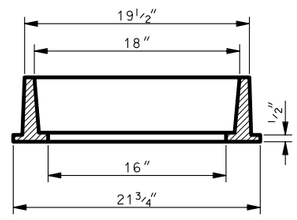

SECTION D-D

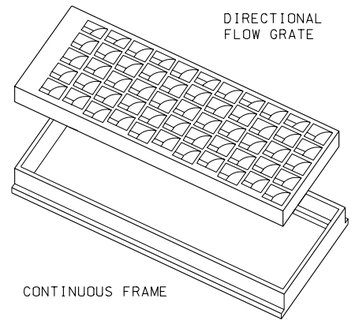

CONTINUOUS FRAME

NOTES:

1. FURNISH GRATE AND FRAME IN EITHER DUCTILE IRON (ASTM A 536 GRADE 60) OR CAST GRAY IRON: AASHTO M 105, CLASS 30B (ASTM A 48).
2. INSTALLATION REQUIRES SUPPORT UNDER LONGITUDINAL AXIS OF FRAME, ORIENT GRADE WITH DIRECTION OF FLOW.

DESIGN DATA

MS 18 (HS-20) OR INTERSTATE ALTERNATE LOADING IN ACCORDANCE WITH CURRENT AASTO AND INTERIM SPECIFICATIONS.

DUCTILE IRON AND STRUCTURAL STEEL: fs = 20,000 psi

REVISIONS

NO.	DATE	APPR.	REMARKS

UTAH DEPARTMENT OF TRANSPORTATION
STANDARD DRAWINGS FOR ROAD AND BRIDGE CONSTRUCTION
SALT LAKE CITY, UTAH

RECOMMENDED FOR APPROVAL — JAN.01.2005 DATE
CHAIRMAN STANDARDS COMMITTEE
APPROVED — JAN.01.2005 DATE
DEPUTY DIRECTOR

DIRECTIONAL FLOW GRATE AND FRAME

STANDARD DRAWING TITLE

STD DWG
GF 4

DGN File:N:\East\Standard Drawings\Imperial\2005Approved\Grates Frames and Trash Racks (GF)\gf04.dgn
15-DEC-2004

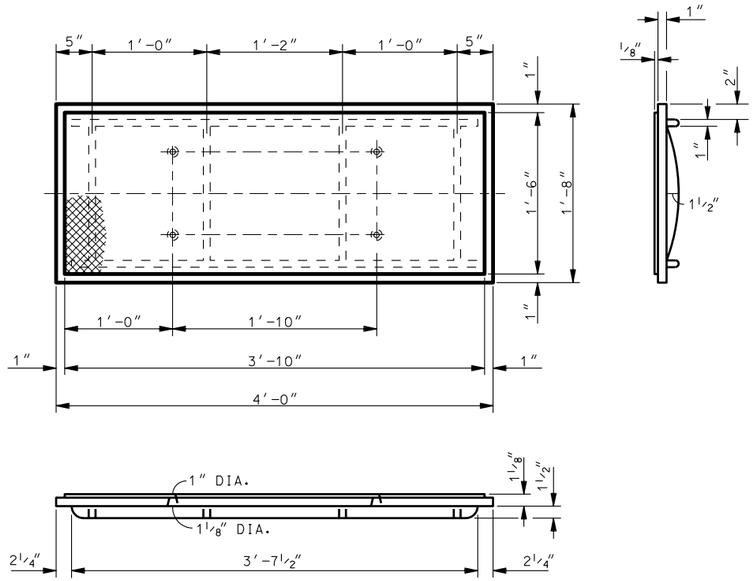

SOLID COVER DETAILS

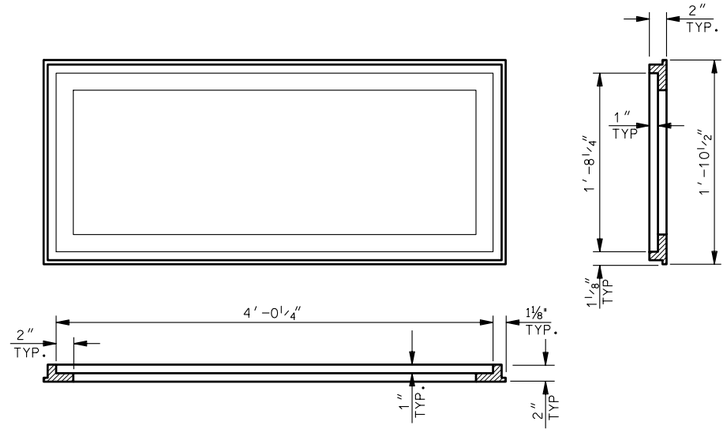

FRAME DETAILS

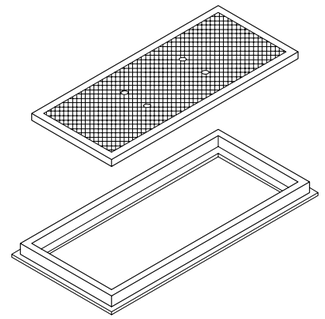

NOTES:

1. FURNISH SOLID COVER AND FRAME IN EITHER DUCTILE IRON (ASTM A 536, GRADE 60) OR CAST GRAY IRON: AASHTO M 105, CLASS 30B (ASTM A 48)
2. INSTALLATION REQUIRES SUPPORT UNDER LONGITUDINAL AXIS OF FRAME, ORIENT GRATE WITH DIRECTION OF FLOW.

DESIGN DATA

MS 18 (HS-20) OR INTERSTATE ALTERNATE LOADING IN ACCORDANCE WITH CURRENT AASHTO AND INTERIM SPECIFICATIONS.

DUCTILE IRON AND STRUCTURAL STEEL: Fs = 20,000 psi

REVISIONS

NO.	DATE	APPR.	REMARKS

UTAH DEPARTMENT OF TRANSPORTATION
STANDARD DRAWINGS FOR ROAD AND BRIDGE CONSTRUCTION
SALT LAKE CITY, UTAH

RECOMMENDED FOR APPROVAL — JAN.01.2005 DATE
CHAIRMAN STANDARDS COMMITTEE
APPROVED — JAN.01.2005 DATE
DEPUTY DIRECTOR

SOLID COVER AND FRAME

STANDARD DRAWING TITLE

STD DWG
GF 5

DGN File:N:\Esd\Standard Drawings\Imperial\2005Approved\Grates Frames and Trash Racks (GF)\gf05.dgn
15-DEC-2004

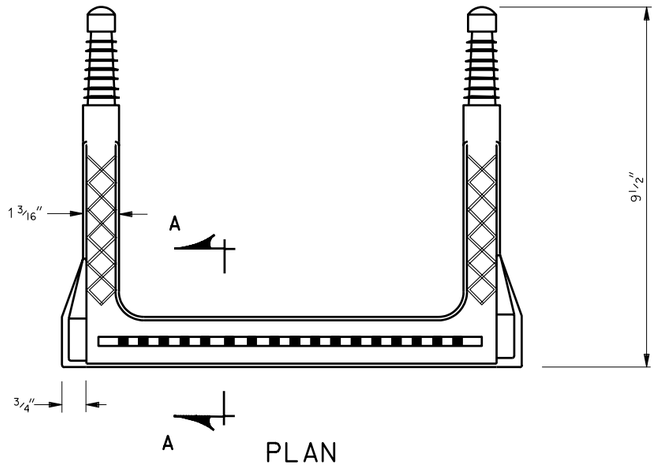

PLAN

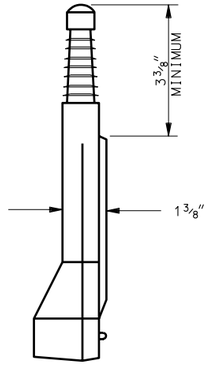

RIGHT SIDE VIEW

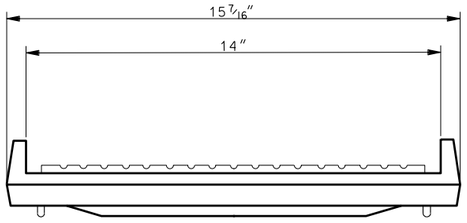

END VIEW

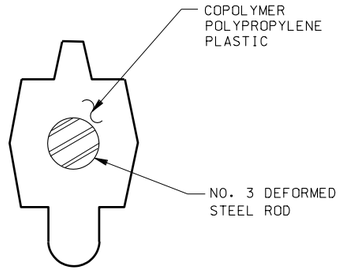

SECTION A-A

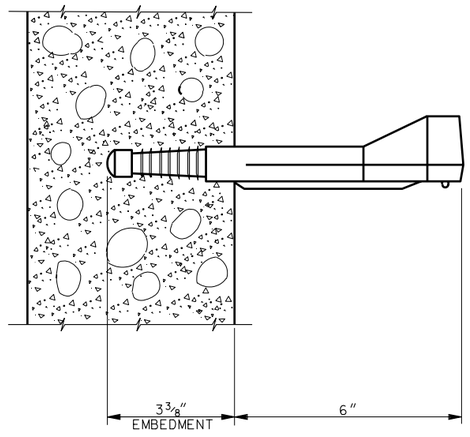

EMBEDMENT DETAIL

NOTES:

1. MANHOLE STEPS: CAPABLE OF WITHSTANDING A SINGLE CONCENTRATED LOAD OF 300 POUNDS APPLIED AT A DISTANCE OF 5 INCHES FROM THE FACE OF THE STRUCTURE WALL.
2. STEPS ARE TO BE VERTICALLY ALIGNED AND UNIFORMLY SPACED WITH A MINIMUM SPACING OF 12 INCHES AND A MAXIMUM SPACING OF 16 INCHES UNLESS SHOWN OTHERWISE ON STRUCTURE PLANS.
3. USE EITHER MANHOLE STEPS CAST-IN-PLACE, OR GROUTED INTO STRUCTURE WALL IN SUCH A MANNER AS TO PREVENT PULLOUT UNDER A LOAD OF 300 POUNDS APPLIED 5 INCHES FROM THE FACE OF THE STRUCTURE WALL.
4. STEEL REINFORCING OF MANHOLE STEPS: CONFORM TO AASHTO DESIGNATION M 31, GRADE 60, DEFORMED STEEL BAR. PLASTIC COATING OF MANHOLE STEPS: CONFORM TO ASTM DESIGNATION D 2146, TYPE II, GRADE 16906.
5. MANHOLE STEPS: CONFORM TO AASHTO DESIGNATION M 199 UNLESS NOTED OTHERWISE.
6. DIMENSIONS MAY VARY WITH MANUFACTURES DESIGN. USE ALTERNATIVE DESIGN WITH THE APPROVAL OF THE ENGINEER.

REVISIONS

NO.	DATE	APPR.	REMARKS

UTAH DEPARTMENT OF TRANSPORTATION
STANDARD DRAWINGS FOR ROAD AND BRIDGE CONSTRUCTION
SALT LAKE CITY, UTAH

RECOMMENDED FOR APPROVAL — JAN.01.2005 DATE
CHAIRMAN STANDARDS COMMITTEE
APPROVED — JAN.01.2005 DATE
DEPUTY DIRECTOR

MANHOLE STEPS

STANDARD DRAWING TITLE

STD DWG
GF 6

DGN File:N:\Esh\Standard Drawings\Imperial\2005Approved\Grates Frames and Trash Racks (GF)\gf06.dgn
15-DEC-2004

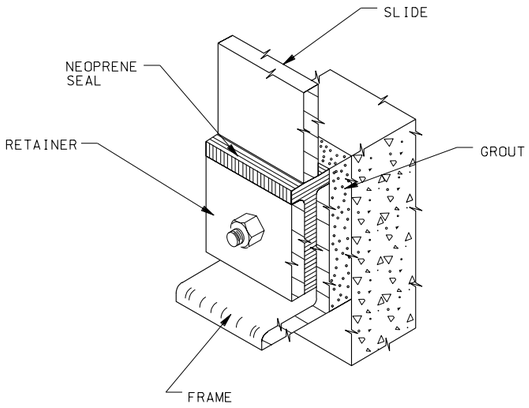

FLUSH BOTTOM CLOSURE

STANDARD SCREW GATE SIZES FOR 5 FEET OF HEAD OR LESS												
A (INCH)	12	15	18	21	24	30	36	42	48	54	60	72
B (INCH)	12	12	12	21	12	18	24	24	24	30	30	36
	15	15	18		18	24	30	30	30	36	36	42
	18	18	24		24	30	36	36	36	42	42	48
	24	24	30		30	36	42	42	42	48	48	54
		30	36		36	42	48	48	48	54	54	60
					42	48	54	54	54	60	60	72
					48		60	72	60	72	72	
									72			

* FRAME HEIGHTS ARE AVAILABLE IN 1 FOOT INCREMENTS UP TO 10 FEET.
* OPENING SIZE : A X B

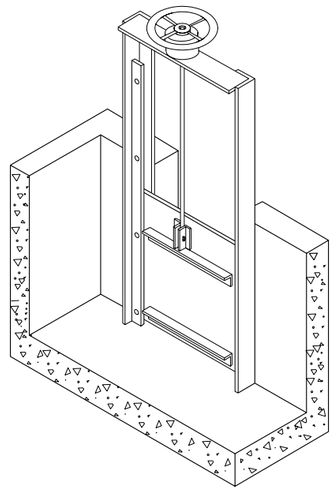

ISOMETRIC VIEW

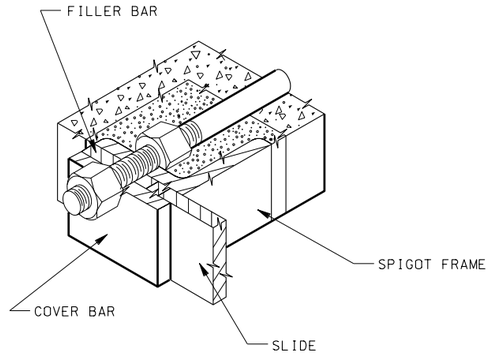

SPIGOT BACK MOUNTING

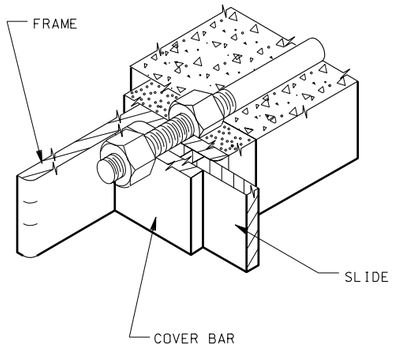

FLAT BACK MOUNTING

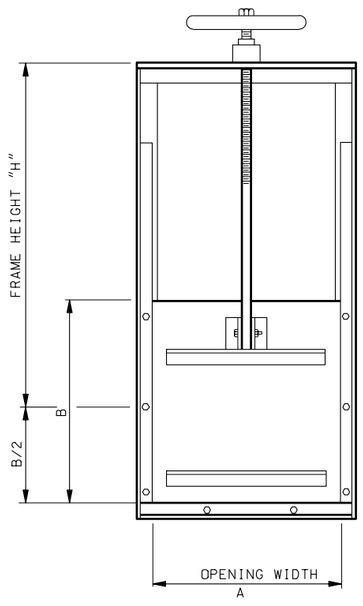

FRONT ELEVATION

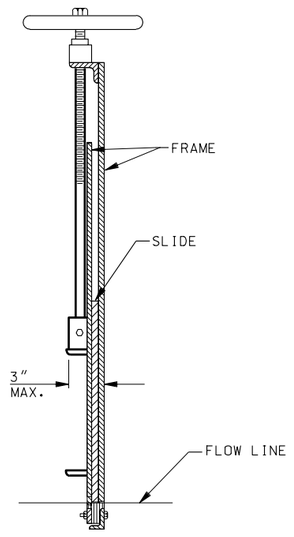

SECTION THRU

NOTES:

1. DESIGN SCREW GATES AND FRAMES FOR A MINIMUM FACE PRESSURE EQUAL TO 5 FEET OF HEAD ABOVE THE GATE OPENING AND ZERO BACK PRESSURE. SCREW GATES ARE INTENDED FOR A MAXIMUM OPENING SIZE OF 6 FT.x 6 FT.
2. CONSTRUCT SCREW GATE AND FRAME WITH CARBON STEEL CONFORMING TO AASHTO DESIGNATION M 183, GRADE 36, OPTIONAL GALVANIZING IN ACCORDANCE WITH AASHTO SPECIFICATION M 111.
3. MOUNT FRAME USING EITHER FLAT BACK OR SPIGOT BACK DETAILS DEPENDING ON CONDITIONS.
4. SUBMIT, IN ALL CASES, SHOP DRAWINGS FOR APPROVAL. SIMILAR SCREW GATES AND FRAMES CAN BE USED SUBJECT TO THE APPROVAL OF SHOP DRAWINGS.
5. SEE MANUFACTURES DETAILS FOR FRAME SIZES, AND PLACEMENT OF MOUNTING BOLTS.

DESIGN DATA

STRUCTURAL STEEL: fs = 20, 000 PSI
DESIGN SEATING HEAD : 0-5 FT.

REVISIONS

NO.	DATE	APPR.	REMARKS

UTAH DEPARTMENT OF TRANSPORTATION
STANDARD DRAWINGS FOR ROAD AND BRIDGE CONSTRUCTION
SALT LAKE CITY, UTAH

RECOMMENDED FOR APPROVAL — JAN.01.2005 DATE
CHAIRMAN STANDARDS COMMITTEE
APPROVED — JAN.01.2005 DATE
DEPUTY DIRECTOR

STANDARD SCREW GATE AND FRAME

STANDARD DRAWING TITLE

STD DWG
GF 7

DGN File:N:\Esah\Standard Drawings\Imperial\2005Approved\Grates Frames and Trash Racks (GF)\gf07.dgn
15-DEC-2004

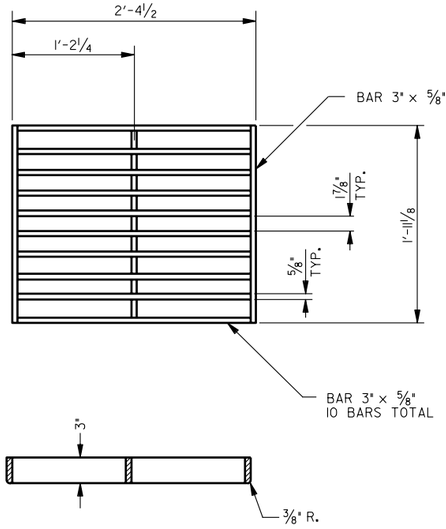

STANDARD GRATE

GRATE WEIGHT = 179 LBS.

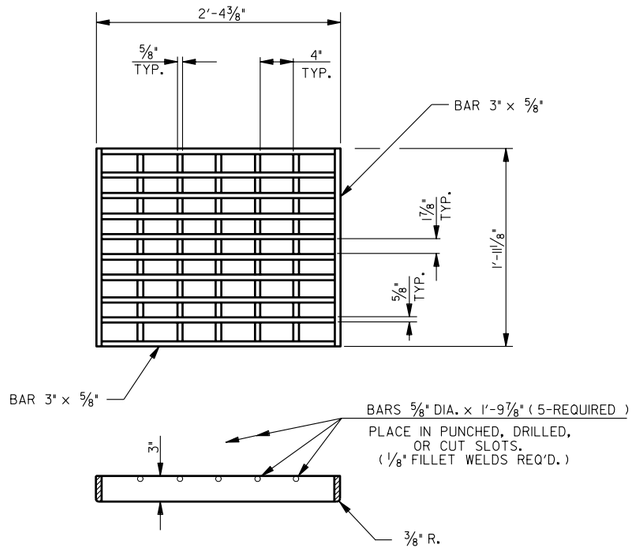

BICYCLE-SAFE GRATE

GRATE WEIGHT = 179 LBS.

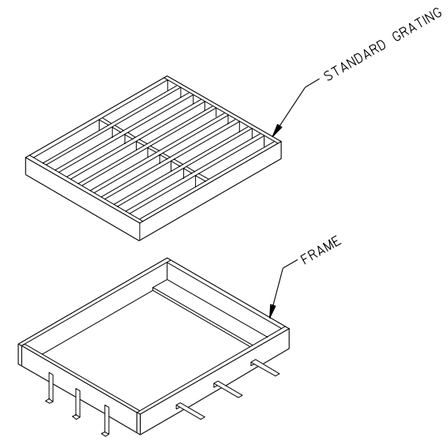

NOTES:

1. HOT-DIP GALVANIZE THE GRATING AND FRAME AFTER FABRICATION IN ACCORDANCE WITH AASHTO DESIGNATION M 111.
2. USE STRUCTURAL CARBON STEEL CONFORMING TO AASHTO DESIGNATION M 270 GRADE 36 FOR STRUCTURAL STEEL GRATING.
3. SEE ROADWAY PLANS FOR LOCATION AND NUMBER OF GRATES REQUIRED.
4. WELD ALL JOINTS WITH A ¼" FILLET WELD UNLESS NOTED OTHERWISE.

DESIGN DATA

GRATE AND FRAME: MEET HS-20 OR INTERSTATE ALTERNATE LOADING IN ACCORDANCE WITH AASHTO SPECIFICATIONS WHICH ARE IN EFFECT AT DATE OF REQUEST FOR BIDS.

STRUCTURAL STEEL: Fs=20,000psi

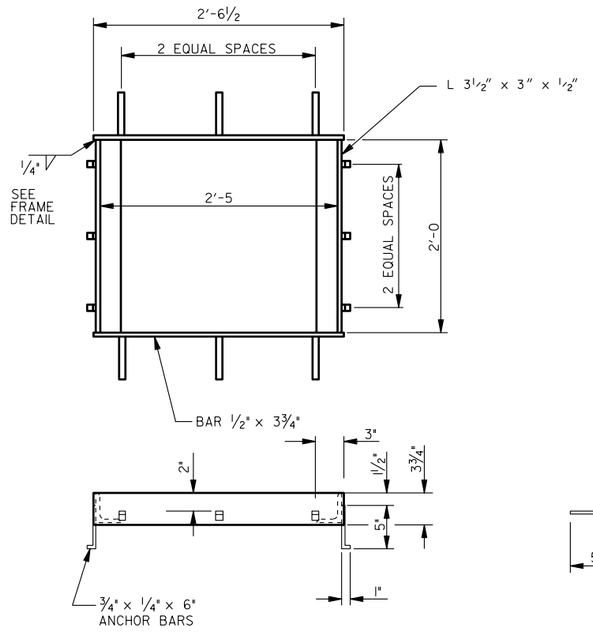

FRAME

FRAME WEIGHT = 77 LBS

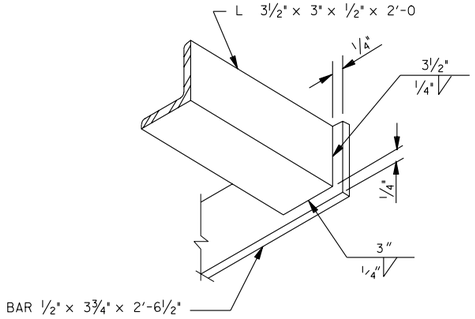

FRAME DETAIL

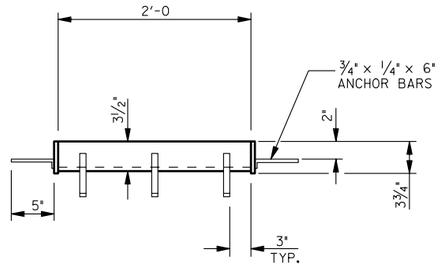

REVISIONS

NO.	DATE	APPR.	REMARKS

UTAH DEPARTMENT OF TRANSPORTATION
STANDARD DRAWINGS FOR ROAD AND BRIDGE CONSTRUCTION
SALT LAKE CITY, UTAH

RECOMMENDED FOR APPROVAL — JAN.01.2005 DATE
CHAIRMAN STANDARDS COMMITTEE
APPROVED — JAN.01.2005 DATE
DEPUTY DIRECTOR

2′ x 2′ GRATE AND FRAME

STANDARD DRAWING TITLE

STD DWG
GF 8

DGN File:N:\Esa\Standard Drawings\Imperial\2005Approved\Grates Frames and Trash Racks (GF)\gf08.dgn
15-DEC-2004

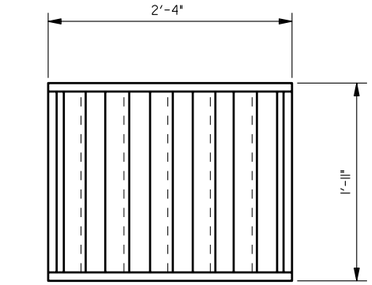

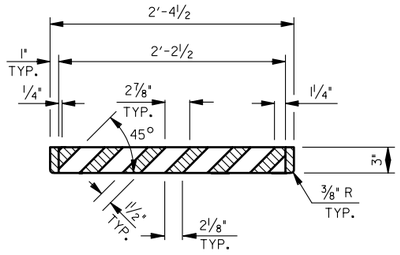

GRATE

GRATE WEIGHT = 410 LBS.

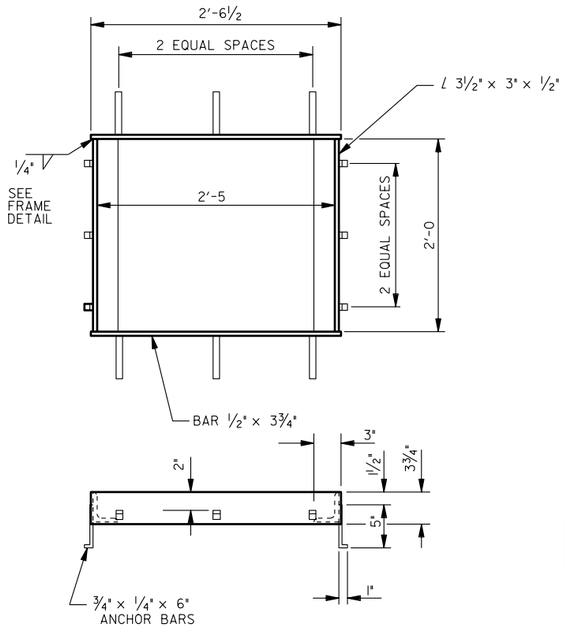

FRAME

FRAME WEIGHT = 77 LBS.

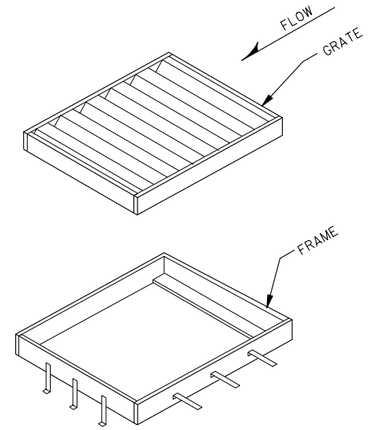

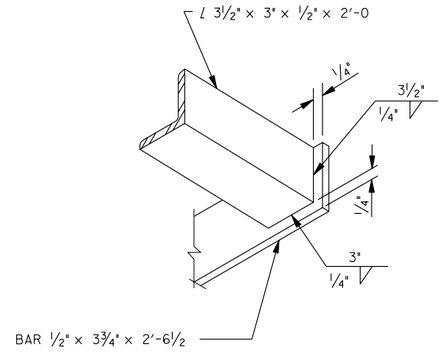

FRAME DETAIL

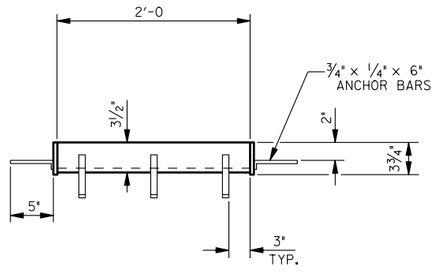

NOTES:

1. HOT-DIP GALVANIZE GRATING AND FRAME AFTER FABRICATION IN ACCORDANCE WITH AASHTO DESIGNATION M 111.
2. USE STRUCTURAL CARBON STEEL CONFORMING TO AASHTO DESIGNATION M 270, GRADE 36 FOR STRUCTURAL STEEL GRATING.
3. SEE ROADWAY PLANS FOR LOCATION AND NUMBER OF GRATES REQUIRED.
4. WELD ALL JOINTS WITH A ¼" FILLET WELD UNLESS NOTED OTHERWISE.
5. ORIENT GRATE WITH DIRECTION OF FLOW.

DESIGN DATA

GRATE AND FRAME: MEET HS 20-44 LOADING OR INTERSTATE ALTERNATE LOADING IN ACCORDANCE WITH AASHTO SPECIFICATIONS WHICH ARE IN EFFECT AT DATE OF REQUEST FOR BIDS.

STRUCTURAL STEEL: Fs=24,000psi

REVISIONS

NO.	DATE	APPR.	REMARKS

UTAH DEPARTMENT OF TRANSPORTATION
STANDARD DRAWINGS FOR ROAD AND BRIDGE CONSTRUCTION
SALT LAKE CITY, UTAH

RECOMMENDED FOR APPROVAL — JAN.01.2005 DATE
CHAIRMAN STANDARDS COMMITTEE
APPROVED — JAN.01.2005 DATE
DEPUTY DIRECTOR

28" x 24" DIRECTIONAL FLOW GRATE AND FRAME

STANDARD DRAWING TITLE

STD DWG
GF 9

DGN File: N:\Eng\Standard_Drawings\Imperial\2005Approved\Grates Frames and Trash Racks (GF)\gf09.dgn
15-DEC-2004

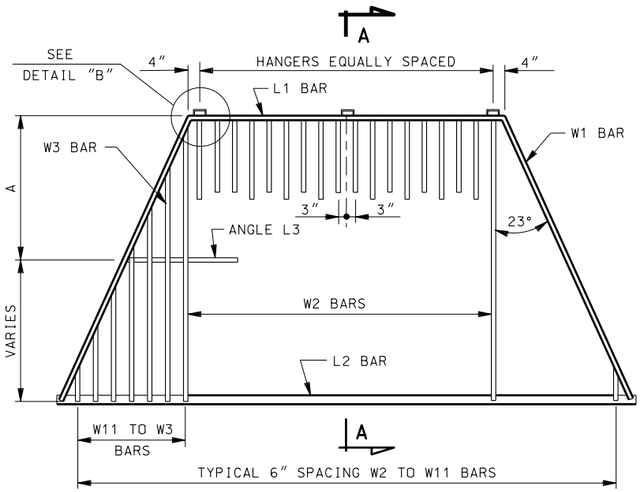

STEEL GRATING DETAIL

SEE STD DWG GF 11 & GF 12 FOR LINES 1 THRU 48

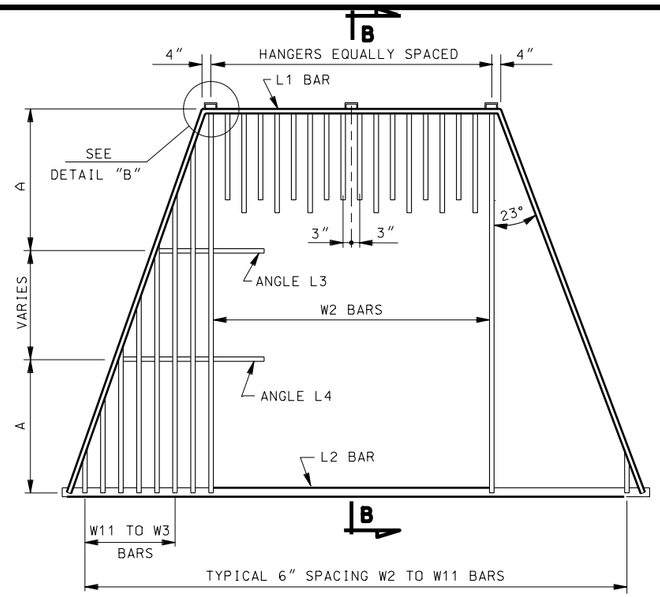

STEEL GRATING DETAIL

SEE STD DWG GF 12 FOR LINES 48 THRU 90

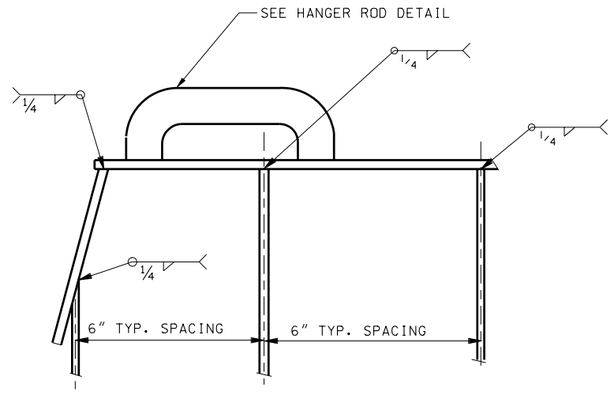

DETAIL "B"

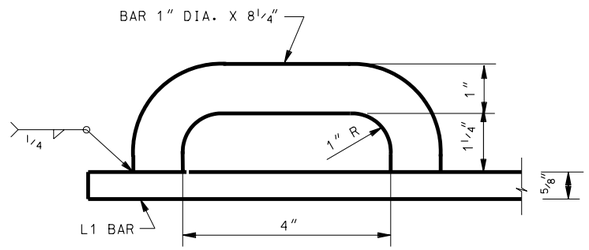

HANGER ROD DETAIL

(WEIGHT OF HANGER RODS 1.84 LBS. EACH)

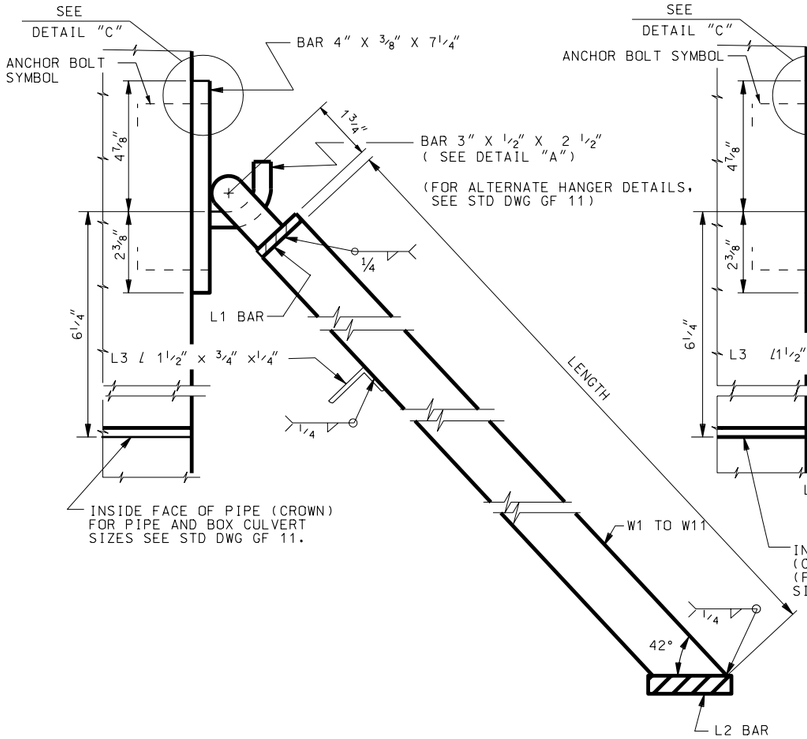

SECTION A–A

WHEN INSTALLING TRASH RACK ON CULVERT HEADWALL
USE CROWN OF CULVERT TO POSITION HANGERS ON HEADWALL

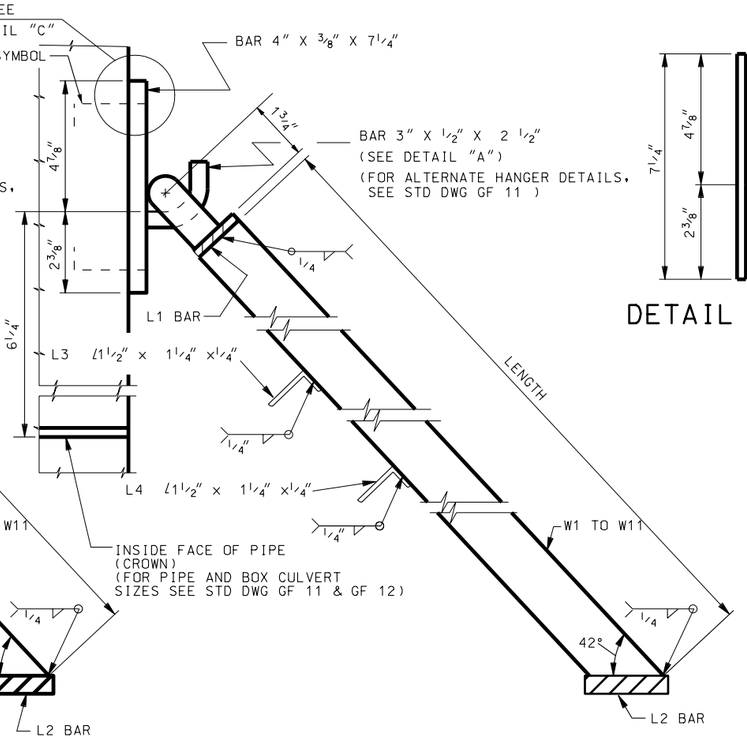

SECTION B–B

WHEN INSTALLING TRASH RACK ON CULVERT HEADWALL
USE CROWN OF CULVERT TO POSITION HANGERS ON HEADWALL

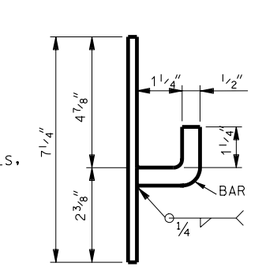

DETAIL "A"

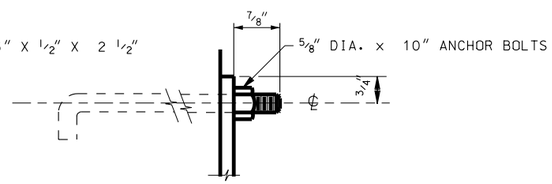

DETAIL "C"

2 ANCHOR BOLTS PER HANGER
(WEIGHT FOR BOLT & NUT 0.97 LBS.)

NOTES:

1. USE STRUCTURAL CARBON STEEL FOR ALL STRUCTURAL STEEL CONFORMING TO AASHTO DESIGNATION M 270 GRADE 36 (ASTM A 709M, GRADE 250).
2. HOT-DIP GALVANIZE ALL STRUCTURAL STEEL AFTER FABRICATION IN ACCORDANCE WITH AASHTO DESIGNATION M 111(ASTM A 123)

DESIGN DATA

THE DESIGN IS IN ACCORDANCE WITH AASHTO AND INTERIM SPECIFICATIONS:

fs= 20,000 psi

REVISIONS

NO.	DATE	APPR.	REMARKS

UTAH DEPARTMENT OF TRANSPORTATION
STANDARD DRAWINGS FOR ROAD AND BRIDGE CONSTRUCTION
SALT LAKE CITY, UTAH

RECOMMENDED FOR APPROVAL — JAN.01.2005 DATE
CHAIRMAN STANDARDS COMMITTEE
APPROVED — JAN.01.2005 DATE
DEPUTY DIRECTOR

STANDARD TRASH RACKS 90° X-ING ANGLE

STANDARD DRAWING TITLE

STD DWG
GF 10

DGN File:N:\East\Standard Drawings\Imperial\2005Approved\Grates Frames and Trash Racks (GF)\gf10.dgn
15-DEC-2004

TO BE USED FOR (NOM. SIZE)								TRANSVERSE BARS								MAIN BARS													NO. OF HANGER AND HANGER RODS (SPACED EQUALLY)	WEIGHT OF STRUCT. STEEL
								1- EACH REQUIRED								2- EACH		2-EACH REQUIRED									W1 TO W11			
LINE	BOX CULVERTS	CORRUGATED METAL PIPES	CORRUGATED PIPE ARCHES	CONCRETE PIPE	MULTI-PLATE ELLIPSES	MULTI-PLATE PIPE ARCHES	A	L1			L2			L3	L4	W1	W2		W3	W4	W5	W6	W7	W8	W9	W10	W11				
								LENGTH	THICKNESS	WIDTH	LENGTH	THICKNESS	WIDTH	LENGTH	LENGTH	LENGTH	LENGTH	NO.	LENGTH	LENGTH	LENGTH	LENGTH	LENGTH	LENGTH	LENGTH	LENGTH	LENGTH	THICKNESS	WIDTH		LBS.
1		18″	29″ X 18″	18″			1′-5	1′-5	1/4″	1 1/4″	3′-11 3/4″	1/2″	1 5/8″	2′-8	0	3′-2 3/4″	2′-11 5/8″	2	2′-10 1/8″	1′-8 1/8″	0′-6 1/8″							1/4″	1 1/4″	2	55.8
2							1′-5	2′-4			4′-10 5/8″			3′-7		3′-2 3/4″	2′-11 5/8″	4	2′-9″	1′-7″	0′-5″									67.5
3		21″		21″			1′-7	1′-8			4′-6 1/2″			3′-1		3′-7 1/8″	3′-4 1/8″	4	2′-4 1/4″	1′-2 1/4″											64.5
4		24″		24″			1′-10	1′11			5′-1 1/4″			3′-6		4′-0 1/8″	3′-8 5/8″	4	3′-0 1/4″	1′-10 1/4″	0′- 8 1/4″										74.5
5			36″ x 22″				1′-10	2′-11			5′-10 3/4″			4′-6		3′-9 1/4″	3′-5 3/8″	6	2′-9 1/4″	1′-7 1/4″	0′-5 1/4″										84.4
6				27″			2′-0	2′-2			5′-8 1/8″			3′-11		4′-5 1/2″	4′-1 1/8″	4	3′-8 1/4″	2′-6 1/4″	1′-4 1/4″										84.4
7			43″ x 27″				2′-0	3′-6			7′-0 1/8″			5′-3		4′-5 1/2″	4′-1 1/8″	6	4′-0 1/8″	2′-10 7/8″	1′-8 1/8″	0′-6 1/8″									105.7
8			50″ x 31″				2′-3	4′-1			8′-0 3/8″			6′-0		5′-0″	4′-7 1/4″	8	4′-1″	2′-11″	1′-9″	0′-7″									125.9
9	24″ X 24″						1′-10	1′-11			5′-1 3/8″			3′-6		4′-0 1/8″	3′-8 3/8″	4	3′-0 1/4″	1′-10 1/4″	0′-8 1/4″										74.5
10		30″		30″			2′-2	2′-5			6′-3″			4′-4		4′-10 3/8″	4′-5 3/8″	4	4′-4 1/4″	3′-2 1/4″	2′-0 1/4″	0′-10 1/4″										96.2
11	36″ X 24″						1′-10	2′-11			6′-1 3/8″			4′-6		4′-0 1/2″	3′-8 3/8″	6	3′-0 1/4″	1′-10 1/4″	0′-8 1/4″										89.0
12	48″ X 24″						1′-10	3′-11			7′-1 3/8″			5′-6		4′-0 1/2″	3′-8 3/8″	8	3′-0 1/4″	1′-10 1/4″	0′-8 1/4″										103.6
13	60″ X 24″						1′-10	4′-11			8′-1 3/8″			6′-6		4′-0 1/2″	3′-8 3/8″	10	3′-0 1/4″	1′-10 1/4″	0′-8 1/4″										118.1
14	72″ X 24″						1′-10	5′-11			9′-1 3/8″			7′-6		4′-0 1/2″	3′-8 3/8″	12	3′-0 1/4″	1′-10 1/4″	0′-8 1/4″									2	132.7
15	84″ X 24″						1′-10	6′-11			10′-1 3/8″			8′-6		4′-0 1/2″	3′-8 3/8″	14	3′-0 1/4″	1′-10 1/4″	0′-8 1/4″									3	153.1
16	96″ X 24″						1′-10	7′-11			11′-1 3/4″			9′-6		4′-0 1/2″	3′-8 3/8″	16	3′-0 1/4″	1′-10 1/4″	0′-8 1/4″									3	167.6
17				33″			2′-5	2′-8	1/4″		6′-9 1/8″			4′-9		5′-3 1/4″	4′-10 1/8″	6	3′-10 1/4″	2′-8 1/4″	1′-6 1/4″									3	113.0
18		36″		36″			2′-7	2′-11	3/8″		7′-4 1/2″			5′-2		5′-7 7/8″	5′-2 3/8″	6	4′-5 7/8″	3′-3 1/8″	2′-1 7/8″	0′-11 1/8″									2	121.4
19			58″ x 36″				2′-7	4′-9			9′-2 1/2″			7′-0		5′-7 7/8″	5′-2 3/8″	10	4′-3 5/8″	3′-1 3/8″	1′11 5/8″	0′-9 1/8″										155.4
20	36″ X 36″						2′-7	2′-11			7′-4 1/2″			5′-2		5′-7 7/8″	5′-6 1/2″	6	4′-5 7/8″	3′-3 1/2″	2′-1 7/8″	0′-11 1/8″										121.4
21				39″			2′-9	3′-2			7′-11 3/8″			5′-7		6′-0 3/4″	5′-11 3/8″	6	5′-2″	4′-0″	2′-10″	1′-8″	0′-6″									135.0
22		42″		42″			2′-11	3′-5			8′-6 1/4″			5′-11		6′-5 1/2″	5′-2 3/8″	6	5′-9 7/8″	4′-7 1/2″	3′-5 5/8″	2′-3 1/2″	1′-1 1/8″									148.5
23	48″ x 36″						2′-7	3′-11			8′-4 1/2″			6′-2		5′-7 7/8″	5′-2 3/8″	8	4′-5 7/8″	3′-3 7/8″	2′-1 7/8″	0′-11 1/8″										139.8
24	60″ x 36″						2′-7	4′-11			9′-4 1/2″			7′-2		5′-7 7/8″	5′-8 3/8″	10	4′-5 7/8″	3′-3 7/8″	2′-1 7/8″	0′-11 1/8″										158.2
25			65″ x 40″				2′-10	5′-4			10′-2 3/4″			7′-9		6′-2 3/8″	5′-2 3/8″	10	5′-5 3/4″	4′-3 1/4″	3′-1 3/4″	1′-11 3/4″	0′-9 3/4″								2	180.1
26	72″ x 36″						2′-7	5′-11			10′-4 1/2″			8′-2		5′-7 7/8″	5′-2 3/8″	12	4′-6″	3′-4″	2′-2″	1′-0″									3	182.5
27			72″ x 44″				3′-1	5′-11			11′-2 7/8″			8′-7		6′-8 3/8″	5′-2 3/8″	12	5′5 7/8″	4′-3 7/8″	2′-1 7/8″	0′-11 7/8″	0′-9 7/8″								4	212.4
28	84″ x 36″						2′-7	6′-11			11′-4 1/2″			9′-2		5′-7 7/8″	5′-2 3/8″	14	4′-5 7/8″	3′-3 7/8″	2′-1 7/8″	0′-11 7/8″										200.8
29	96″ x 36″						2′-7	7′-11			12′-4 1/2″			10′-2		5′-7 7/8″	5′-2 3/8″	16	4′-5 7/8″	3′-3 7/8″	2′-1 7/8″	0′-11 7/8″										219.3
30	108″ x 36″						2′-7	8′-11			13′-4 1/2″			11′-2		5′-7 7/8″	5′-2 3/8″	18	4′-5 7/8″	3′-3 7/8″	2′-1 7/8″	0′-11 7/8″										237.7
31	120″ x 36″						2′-7	9′-11			14′-4 1/2″			12′-2		5′-7 7/8″	5′-2 3/8″	20	4′-5 7/8″	3′-3 7/8″	2′-1 7/8″	0′-11 7/8″									3	258.4
32	132″ x 36″						2′-7	10′-11			15′-4 1/2″			13′-2		5′-7 7/8″	5′-2 3/8″	22	4′-5 7/8″	3′-3 7/8″	2′-1 7/8″	0′-11 7/8″									4	280.3
33	144″ x 36″						2′-7	11′-11	3/8″	1 1/4″	16′-4 1/2″		1 5/8″	14′-2		5′-7 7/8″	5′-2 3/8″	24	4′-5 7/8″	3′-3 7/8″	2′-1 7/8″	0′-11 7/8″									4	298.7
34		48″		48″			3′-4	3′-11	1/4″	1 1/2″	9′-8 1/8″		2″	6′-10		7′-3 3/8″	6′-8 3/4″	8	6′-0 3/8″	4′-10 3/8″	3′-8 1/2″	2′-6 3/8″	1′-4 3/8″								4	196.0
35	48″ x 48″						3′-4	3′-11			9′-8 1/2″			6′-10		7′-3 3/8″	6′-8 3/4″	8	6′-0 3/8″	4′-10 3/8″	3′-8 1/2″	2′-6 3/8″	1′-4 3/8″							1 1/4″	5	201.8
36		54″		54″			3′-8	4′-5			10′-9 7/8″			7′-7		8′-1 3/8″	7′-5 3/4″	8	7′-4 1/4″	6′-2 1/4″	3′-0 1/4″	3′-10 1/4″	2′-8 1/4″	1′-6 1/4″						1 1/2″	2	246.3
37	60″ x 48″						3′-4	4′-11			10′-8 1/8″			7′-10		7′-3 3/8″	6′-8 3/4″	10	6′-0 3/8″	4′-10 3/8″	3′-8 1/2″	2′-6 3/8″	1′-4 3/8″							1 1/4″	2	206.6
38	72″ x 48″							5′-11			11′-8 1/2″			8′-10				12													2	228.7
39	84″ x 48″							6′-11			12′-8 1/2″			9′-10				14													2	250.9
40	96″ x 48″							7′-11			13′-8 1/2″			10′-10				16													3	278.9
41	108″ x 48″							8′-11			14′-8 1/2″			11′-10				18													3	301.1
42	120″ x 48″							9′-11			15′-8 1/2″			12′-10				20													3	323.2
43	132″ x 48″							10′-11			16′-8 1/2″			13′-10				22													4	351.2
44	144″ x 48″						3′-4	11′-11	1/4″	1 1/2″	17′-8 1/2″	1/2″	2″	14′-10	0	7′-3 3/8″	6′-8 3/4″	24	6′-0 3/8″	4′-10 3/8″	3′-8 1/2″	2′-6 3/8″	1′-4 3/8″							1/4″	1 1/4″	4	373.4

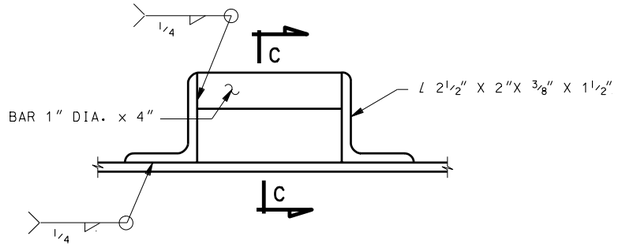

ALTERNATE HANGER ROD DETAIL

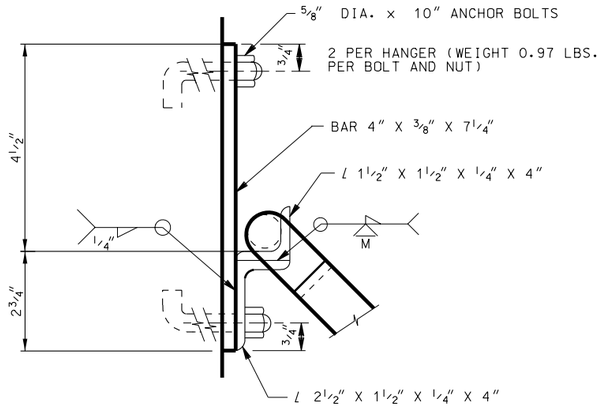

DETAIL "A"
(ALTERNATE HANGER DETAILS)

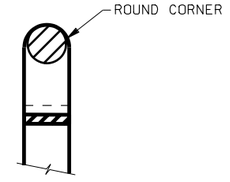

SECTION C-C

REVISIONS

NO.	DATE	APPR.	REMARKS

UTAH DEPARTMENT OF TRANSPORTATION
STANDARD DRAWINGS FOR ROAD AND BRIDGE CONSTRUCTION
SALT LAKE CITY, UTAH

RECOMMENDED FOR APPROVAL — JAN.01.2005 DATE
CHAIRMAN STANDARDS COMMITTEE
APPROVED — JAN.01.2005 DATE
DEPUTY DIRECTOR

STANDARD TRASH RACKS
STANDARD DRAWING TITLE

STD DWG
GF 11

DGN File:N:\Esd\Standard Drawings\Imperial\2005Approved\Grates Frames and Trash Racks (GF)\gf11.dgn
15-DEC-2004

TO BE USED FOR (NOM. SIZE)								TRANSVERSE BARS								MAIN BARS																	
								1- EACH REQUIRED								2- EA.		2-EACH REQUIRED										W1 TO W11			NO. OF HANGER AND HANGER RODS (SPACED EQUALLY)	WEIGHT OF STRUCT. STEEL
								L1			L2			L3	L4	W1	W2		W3	W4	W5	W6	W7	W8	W9	W10	W11				
LINE	BOX CULVERTS	CORRUGATED METAL PIPES	CORRUGATED PIPE ARCHES	CONCRETE PIPE	MULTI-PLATE ELLIPSES	MULTI-PLATE PIPE ARCHES	A	LENGTH	THICKNESS	WIDTH	LENGTH	THICKNESS	WIDTH	LENGTH	LENGTH	LENGTH	LENGTH	NO.	LENGTH	LENGTH	LENGTH	LENGTH	LENGTH	LENGTH	LENGTH	LENGTH	LENGTH	THICKNESS	WIDTH		LBS.
45	156″ x 48″						3′-4	12′-11	1/4″	1 1/2″	18′-8 1/8″	1/2″	2″	15′-10	0	7′-3 7/8″	6′-8 3/4″	26	6′-0 3/8″	4′-10 3/8″	3′-8 3/8″	2′-6 3/8″	1′-4 3/8″					1/4″	1 1/4″	4	395.6
46	168″ x 48″						↓	13′-11	↑	↑	19′-8 1/8″	↑	↑	16′-10	↑	↓	↓	28	↓	↓	↓	↓	↓					↑	↑	5	423.5
47	180″ x 48″							14′-11			20′-8 1/8″			17′-10				30												5	445.7
48	192″ x 48″						3′-4	15′-11			21′-8 1/8″			18′-10	0	7′-3 7/8″	6′-8 3/4″	32	6′-0 3/8″	4′-10 3/8″	3′-8 3/8″	2′-6 3/8″	1′-4 3/8″						1 1/4″	5	467.9
49						73″ x 55″	2′-6	6′-0	↓		12′-6 1/4″			8′-2	10′-4 1/2″	8′-3 3/8″	7′-1 1/4″	12	7′-0″	5′-10″	4′-8″	3′-6″	2′-4″	1′-2 ″						1 1/2″	6	339.1
50						76″ x 57″	2′-8	6′-3	1/4″		12′-8 1/2″			8′-6 1/2	10′-8 1/2″	8′-6 3/8″	7′-10 1/4″	12	7′-8 1/2″	6′-4 1/2″	5′-2 1/8″	4′-0 1/2″	2′-10 1/2″	1′-8 1/2″	0′-6 1/2″					↑	6	357.5
51		60″		60″			2′-8	4′-11	3/8″		11′-11 1/2″			7′-2 1/2	9′-8″	8′-11 1/8″	8′-2 1/2″	10	7′-6″	6′-4 ″	5′-2″	4′-0″	2′-10″	1′-8″	0′-6″						2	310.7
52					56″ x 62″		2′-9	4′-7	↑		11′-10 1/2″			6′-11 1/2	9′-6″	9′-2 1/2″	8′-5 1/8″	10	7′-4 3/8″	6′-2 3/8″	5′-0 3/8″	3′-10 3/8″	2′-8 3/8″	1′-6 3/8″							2	309.3
53						81″ x 59″	2′-8	5′-8			13′-7 3/8″			8′-11 1/2	11′-4″	8′-9 3/4″	8′-1 1/8″	14	7′-1 1/8″	5′-11 1/8″	4′-9 1/8″	3′-7 1/8″	2′-5 1/8″	1′-3 1/2″							3	367.2
54						84″ x 61″	2′-9	8′-11			14′-1″			9′-3 1/2	11′-9″	9′-1″	8′-4 1/4″	14	7′-7 3/4″	6′-5 3/4″	5′-3 3/4″	4′-1 3/4″	2′-11 3/4″	1′-9 3/4″	0′-7 3/4″							3	387.1
55						87″ x 63″	2′-10	7′-2			14′-6 3/8″			9′-7	12′-1″	9′-4 1/8″	8′-7″	14	8′-2 1/8″	7′-0 1/8″	5′-10 1/8″	4′-8 1/2″	3′-6 1/8″	2′-4 1/2″	1′-2 1/8″							3	405.7
56	60″ x 60″						2′-8	4′-11			11′-11 1/8″			7′-2 1/2″	9′-8″	8′-11 1/4″	8′-2 1/2″	10	7′-6″	6′-4″	5′-2″	4′-0″	2′-10″	1′-8″	0′-6″							2	310.7
57		66″		66″			2′-11	5′-5			13′-1 1/4″			7′-11	10′-7″	9′-8 5/8″	8′-11 1/4″	10	8′-9 3/4″	7′-7 3/4″	6′-5 3/4″	5′-3 3/4″	4 -1 3/4″	2′-11 3/8″	1′-9 3/4″	0′-7 3/4″						3	365.5
58	72″ x 60″						↑	5′-11			12′-11 1/2″			8′-5	10′-5 1/2″	8′-11 1/8″	8′-2″	12	7′-5″	6′-4 ″	5′-2″	4′-0″	2′-10″	1′-8″	0′-6″							4	354.5
59	84″ x 60″							6′-11			13′-11 7/8″			9′-5	11′-5 1/2″			14	↓	↓	↓	↓	↓	↓	↓							3	380.8
60	96″ x 60″							7′-11			14′-11 1/2″			10′-5	12′-5 1/2″			16													3	412.8
61	108″ x 60″							8′-11			15′-11 1/2″			11′-5	13′-5 1/2″			18													3	444.8
62	120″ x 60″							9′-11			16′-11 1/2″			12′-5	14′-5 1/2″			20													4	482.7
63	132″ x 60″							10′-11			17′-11 1/2″			13′-5	15′-5 1/2″			22													4	514.7
64	144″ x 60″							11′-11			18′-11 1/2″			14′-5	16′-5 1/2″			24													4	546.6
65	156″ x 60″							12′-11			19′-11 1/2″			15′-5	17′-5 1/2″			26													5	584.6
66	168″ x 60″							13′-11			20′-11 1/2″			16′-5	18′-5 1/2″			28													5	616.8
67	180″ x 60″						↓	14′-11			21′-11 1/2″			17′-5	19′-5 1/2″	↓	↓	30	↓	↓	↓	↓	↓	↓	↓							5	648.6
68	192″ x 60″						2′-11	15′-11			22′-11 5/8″			18′-5	20′-5 1/2″	8′-11 1/8″	8′-2″	32	7′-5″	6′-4	5′-2″	4′-0″	2′-10″	1′-8″	0′-6″							6	686.5
69					62″ x 68″		3′-0	5′-1			12′-11 7/8″			7′-8	10′-5″	10′- 0 1/4″	9′-2 1/2″	10	8′-8 1/2″	7′-6 3/8″	6′-4 3/8″	5′-2 3/8″	4′-0 3/8″	2′-10 3/8″	1′-8 3/8″	0′-6 3/8″						6	380.7
70						92″ x 63″	2′-11	7′-7			15′-2″			10′-1	12′-6″	9′-7 3/8″	8′-10″	16	7′-8 7/8″	6′-6 7/8″	5′-4 7/8″	4′-2 7/8″	3′-0 7/8″	1′-10 3/8″	0′-8 7/8″							3	432.2
71						95″ x 67″	3′-0	7′-10			15′-7 1/2″			10′-5	13′-1″	9′-10 5/8″	9′-1″	16	8′-3 3/8″	7′-1 3/8″	5′-11 3/8″	4′-9 3/8″	3′-7 3/8″	2′-5 1/8″	1′-3 3/8″							3	452.2
72						98″ x 69″	3′-2	8′-1	↓		16′-1 /8″			10′-9	13′-4 1/2″	10′-1 3/8″	9′-4″	16	**8′-9 7/8″**	7′-7 7/8″	6′-5 3/8″	5′-3 7/8″	4′-1 7/8″	2′-11 3/8″	1′-9 7/8″	0′-7 1/2″					↓		3	473.8
73		72″		72″			3′-2	5′-11	1/2″		14′-2 7/8″			8′-8	11′-8″	10′-6 3/8″	9′-8 3/8″	12	9′-0″	7′-10″	6′-8″	5′-6″	4′-4″	3′-2″	2′-0″	0′-10″					1 3/4″		4	472.8
74					67″ x 75″		3′-4	5′-6	↑		14′-1 3/4″			8′-4 1/2	11′-3 1/2″	10′-11 1/2″	10′-0 7/8″	10	10′-0 3/8″	8′-10 3/8″	7′-8 5/8″	6′-6 5/8″	5′-4 3/8″	4′-2 5/8″	3′-0 3/8″	1′-10 5/8″	0′-8 5/8″				↑		4	475.6
75						103″ X 71″	3′-2	8′-6			16′-8 5/8″			11′-3	14′-0″	10′-5″	9′-6 7/8″	16	9′-6 3/8″	8′-4 5/8″	7′-2 3/8″	5′-0 5/8″	4′-10 3/8″	3′-8 1/8″	2′-6 3/8″	1′-4 5/8″							4	570.8
76						106″ X 73″	3′-3	8′-9			17′-2 1/2″			11′-6 1/2	14′-4 1/8″	10′-8 1/4″	9′-9 7/8″	18	8′-11 1/8″	7′-9 1/8″	6′-7 1/8″	6′-3 1/2″	4′-3 1/2″	3′-1 1/8″	1′-11 1/8″	0′-9 1/8″							4	598.4
77						112″ X 75″	3′-4	9′-3			17′-10 3/4″			12′-1 1/2	15′-0 1/2″	10′-11 1/2″	10′-0 1/4″	18	9′-9 1/8″	8′-7 1/8″	7′-5 1/8″	6′-3 1/8″	5′-1 1/8″	3′-11 1/8″	2′-9 1/8″	1′-7 1/8″							4	632.1
78						114″ X 77″	3′-5	9′-5			18′-3 3/8″			12′-4	15′-4″	11′-2 3/4″	10′-9 7/8″	18	10′-2 1/2″	9′-0 1/2″	7′-10 1/2″	6′-8 1/4″	5′-6 1/2″	4′-4 1/2″	3′-2 1/2″	2′-0 1/2″	0′-10 1/2″						3	651.1
79	72″ x 72″						3′-2	5′-11			14′-2 7/8″			8′-8	11′-6 1/2″	10′-6 3/8″	9′-8 3/8″	12	9′-0″	7′-10″	6′-8″	5′-6″	4′-4″	3′-2″	2′-0″	0′-10″							3	467.0
80	84″ x 72″						↑	6′-11			15′-2 7/8″			9′-8	12′-6 1/2″			14	↓	↓	↓	↓	↓	↓	↓	↓							3	508.1
81	96″ x 72″							7′-11			16′-2 7/8″			10′-8	13′-6 1/2″			16													3	549.1
82	108″ x 72″							8′-11			17′-2 7/8″			11′-8	14′-6 1/2″			18													4	595.9
83	120″ x 72″							9′-11			18′-2 1/2″			12′-8	15′-6 1/2″			20													4	636.9
84	132″ x 72″							10′-11			19′-2 7/8″			13′-8	16′-6 1/2″			22													4	678.0
85	144″ x 72″							11′-11			20′-2 7/8″			14′-8	17′-6 1/2″			24													5	724.8
86	156″ x 72″							12′-11			21′-2 1/2″			15′-8	18′-6 1/2″			26													5	765.8
87	168″ x 72″							13′-11			22-′ 1/2″			16′-8	19′-6 1/2″			28													5	806.9
88	180″ x 72″						↓	14′-11			23′-2 7/8″			17′-8	20′-6 1/2″			30													6	853.7
89	192″ x 72″						3′-2	15′-11	↓	↓	24′-2 7/8″	↓	↓	18′-8	21′-6 1/2″	10′-6 3/8″	9′-8 3/8″	32	9′-0″	7′-10″	6′-8″	5′-6″	4′-4″	3′-2″	2′-0″	0′-10″					↓	↓	6	894.7
90						96″ x 74″	3′-3	7′-11	1/2″	1 1/2″	16′-5 5/8″	1/2″	2″	10′-8 1/2	13′-8″	10′-10″	9′-11 5/8″	15	9′-10″	8′-8″	7′-6″	6′-4″	5′-2″	4′-0″	2′-10″	1′-8″					1/4″	1 3/4″	3	540.7

REVISIONS

NO.	DATE	APPR.	REMARKS

UTAH DEPARTMENT OF TRANSPORTATION
STANDARD DRAWINGS FOR ROAD AND BRIDGE CONSTRUCTION
SALT LAKE CITY, UTAH

RECOMMENDED FOR APPROVAL — JAN.01.2005 DATE
CHAIRMAN STANDARDS COMMITTEE
APPROVED — JAN.01.2005 DATE
DEPUTY DIRECTOR

STANDARD DRAWING TITLE
STANDARD TRASH RACKS

STD DWG
GF 12

DGN File: N:\Eng\Standard_Drawings\Imperial\2005Approved\Grates_Frames_and_Trash_Racks (GF)\gf12.dgn
15-DEC-2004

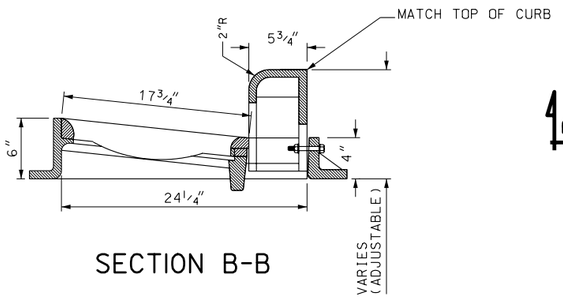

SECTION B-B

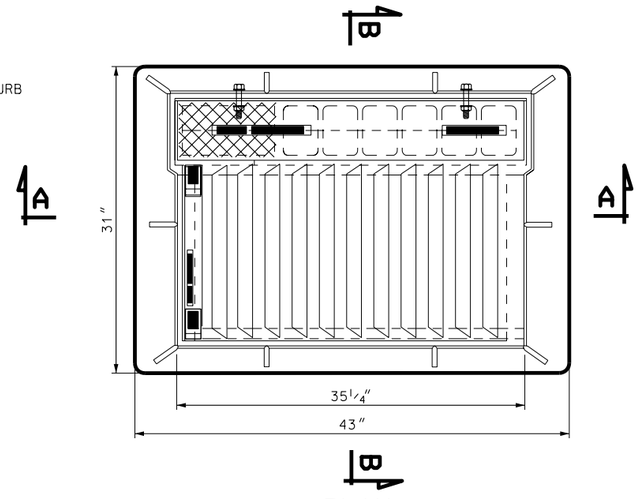

PLAN

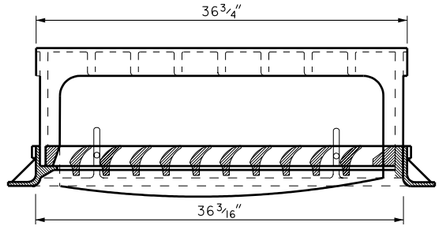

SECTION A-A

NOTES:

1. CAST GRAY IRON PER ASTM A 48 (AASHTO M 105 & M 306) CLASS 35B OR APPROVED EQUAL.
2. DIMENSION OF THE GRATE AND FRAME MAY VARY ± 5% OF SPECIFIED.

DESIGN DATA

HS-20 OR INTERSTATE ALTERNATE LOADING IN ACCORDANCE WITH AASHTO 17th EDITION SPECIFICATIONS.

REVISIONS

NO.	DATE	APPR.	REMARKS

UTAH DEPARTMENT OF TRANSPORTATION

STANDARD DRAWINGS FOR ROAD AND BRIDGE CONSTRUCTION

SALT LAKE CITY, UTAH

RECOMMENDED FOR APPROVAL — JAN.01.2005 DATE

CHAIRMAN STANDARDS COMMITTEE

APPROVED — JAN.01.2005 DATE

DEPUTY DIRECTOR

OPEN CURB INLET GRATE AND FRAME

STD DWG
GF 13

DGN File:N:\East\Standard Drawings\Imperial\2005Approved\Grates Frames and Trash Racks (GF)\gf13.dgn
15-DEC-2004

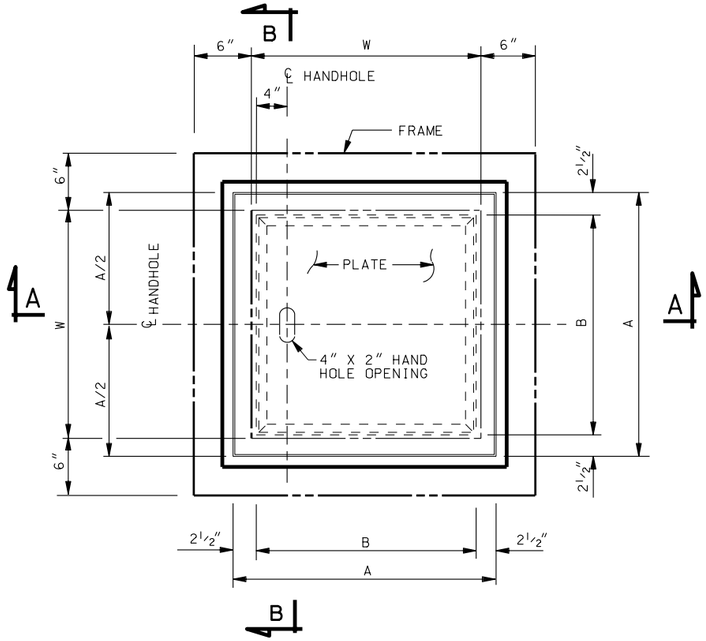

PLAN

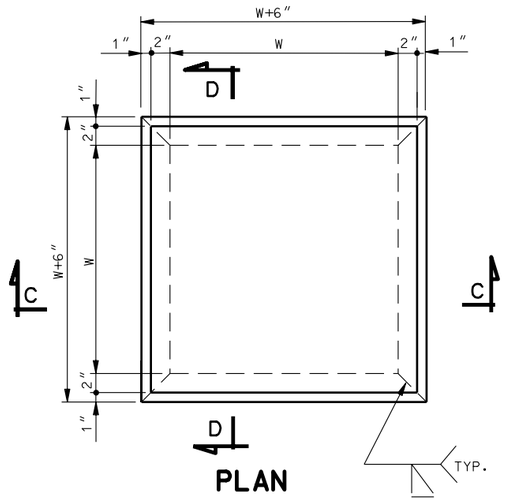

PLAN

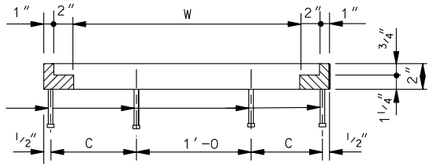

SECTION C-C
SECTION D-D SIMILAR

FRAME DETAILS

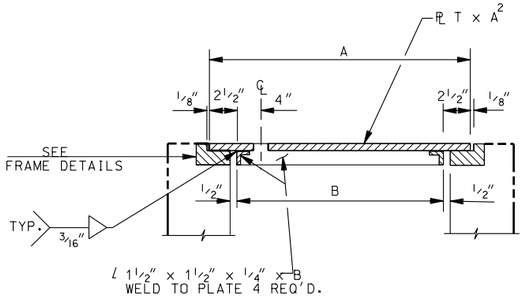

SECTION A-A

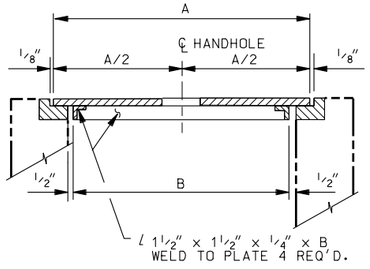

SECTION B-B

COVER DETAILS

NOTE:

ALL STRUCTURAL STEEL: STRUCTURAL CARBON STEEL CONFORMING TO AASHTO DESIGNATION M 270, GRADE 36. AND HOT DIP GALVANIZE AFTER FABRICATION IN ACCORDANCE WITH ASTM A 123.

DESIGN DATA

THE DESIGN IS IN ACCORDANCE WITH AASHTO AND INTERIM SPECIFICATIONS:
Fs = 20,000 psi
LIVE LOAD - HS 20-44

DIMENSIONS					QUANTITIES (LB)		
W	A	B	C	T	COVER	FRAME	TOTAL
2'-0	2'-3¾	1'-10¾	8½"	½"	131	163	294
2'-6	2'-9¾	2'-4¾	11½"	⅝"	189	195	384

REVISIONS

NO.	DATE	APPR.	REMARKS

UTAH DEPARTMENT OF TRANSPORTATION
STANDARD DRAWINGS FOR ROAD AND BRIDGE CONSTRUCTION
SALT LAKE CITY, UTAH

RECOMMENDED FOR APPROVAL — JAN.01.2005 DATE
CHAIRMAN STANDARDS COMMITTEE APPROVED — JAN.01.2005 DATE
DEPUTY DIRECTOR

SOLID COVER FOR
STD DWG DB 1
MS-18 LOADING

STD DWG
GF 14

DGN File: N:\Esd\Standard_Drawings\Imperial\2005Approved\Grates Frames and Trash Racks (GF)\gf14.dgn
15-DEC-2004

STANDARD SCREW GATE AND FRAME DIMENSIONS FOR 5'-0 OF HEAD OR LESS

SIZE OF CLEAR •• OPENING	A	18"	24"	18"	24"	30"	36"	48"	24"	30"	36"	42"	48"	24"	30"	36"	42"	48"	60"	24"	30"	36"	42"	48"	60"	72"	24"	30"	36"	42"	48"
	B	18"	18"	24"	24"	24"	24"	24"	30"	30"	30"	30"	30"	36"	36"	36"	36"	36"	36"	42"	42"	42"	42"	42"	42"	42"	48"	48"	48"	48"	48"
MINIMUM GATE DIMENSION	HEIGHT	18"	18"	24"	24"	24"	24"	24"	30"	30"	30"	30"	30"	36"	36"	36"	36"	36"	36"	42"	42"	42"	42"	42"	42"	42"	48"	48"	48"	48"	48"
	WIDTH	22"	28"	22"	28"	34"	41"	53"	28"	34"	41"	47"	52"	29"	35"	41"	47"	54"	67"	29"	35"	41"	47"	54"	67"	79"	30"	36"	42"	48"	54"
• FRAME HEIGHTS	5'	X	X	X	X	X	X		X	X				X	X					X	X						X	X			
	6'	X	X	X	X	X	X		X	X	X	X		X	X	X	X			X	X	X	X				X	X	X	X	
	7'	X	X	X	X	X	X	X	X	X	X	X	X	X	X	X	X	X		X	X	X	X	X			X	X	X	X	X
	8'	X	X	X	X	X	X	X	X	X	X	X	X	X	X	X	X	X		X	X	X	X	X			X	X	X	X	X
	10'	X	X	X	X	X	X	X	X	X	X	X	X	X	X	X	X	X	X	X	X	X	X	X	X	X	X	X	X	X	X
STEM DIAMETER		1.12"	1.12"	1.12"	1.12"	1.12"	1.12"	1.12"	1.12"	1.12"	1.12"	1.12"	1.50"	1.12"	1.12"	1.12"	1.50"	1.50"	1.50"	1.12"	1.12"	1.50"	1.50"	1.50"	1.50"	2.00"	1.50"	1.50"	1.50"	1.50"	1.50"
WHEEL DIAMETER		10"	10"	10"	10"	10"	14"	24"	14"	14"	14"	18"	24"	14"	18"	18"	24"	24"	30"	18"	18"	24"	24"	30"	24"	30"	24"	24"	24"	30"	30"

• X INDICATES THE FRAME HEIGHT OPTIONS AVAILABLE WITH THE SPECIFIC GATE SIZES

•• USE SCREW GATES SELECTED FROM THESE BASIC SIZE WITH EITHER FLUMES, ROUND PIPE OR PIPE ARCH INSTALLATIONS.

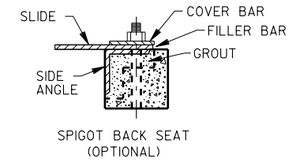

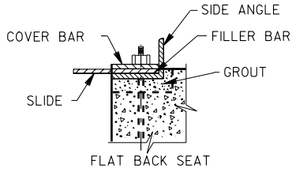

SECTION A-A

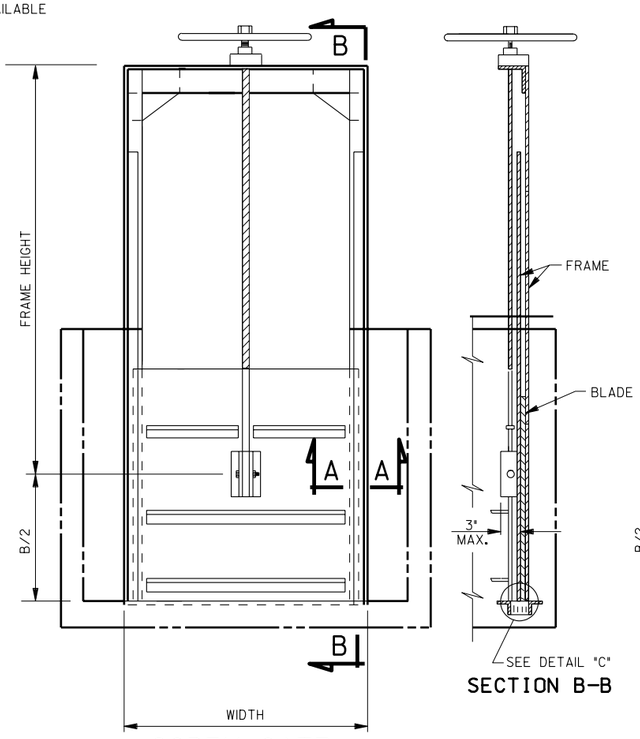

SCREW GATE INSTALLATION DETAIL FOR FLUME OUTLET

SECTION B-B

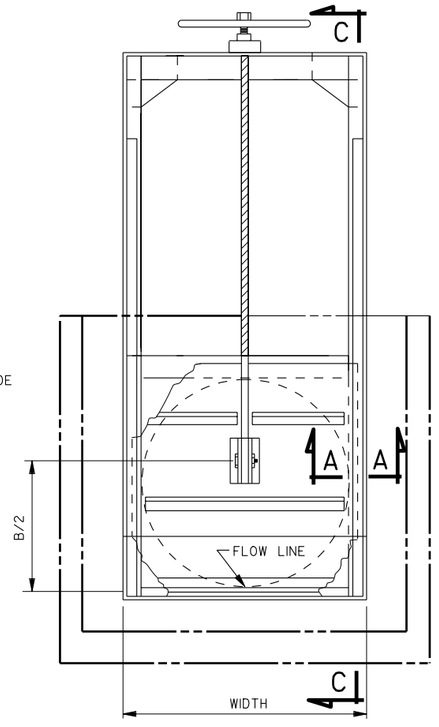

SCREW GATE INSTALLATION DETAIL FOR PIPE OUTLET
(ARCH PIPE INSTALLATION SIMILAR)

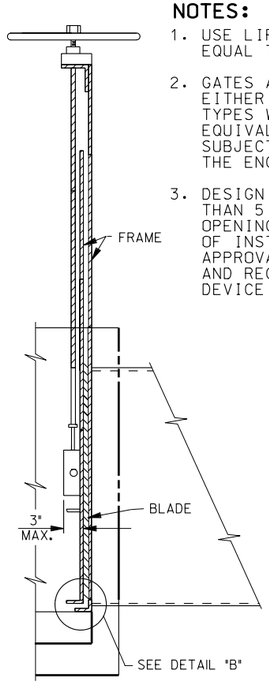

SECTION C-C

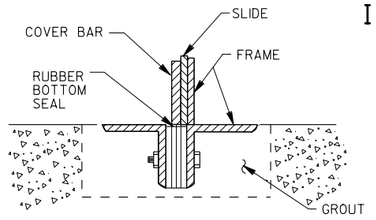

DETAIL "C"

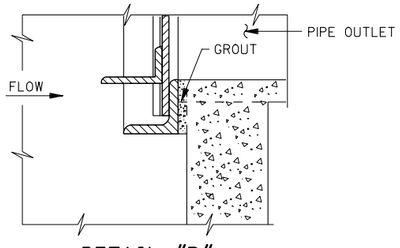

DETAIL "B"
(TYPICAL WALL SILL INSTALLATION)

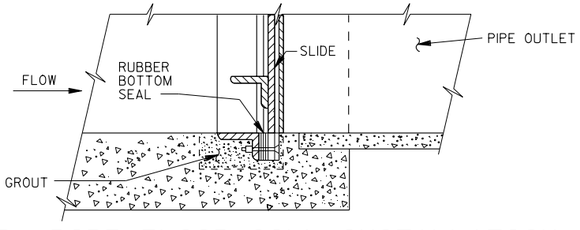

TYP. PIPE FLOOR SILL INSTALLATION

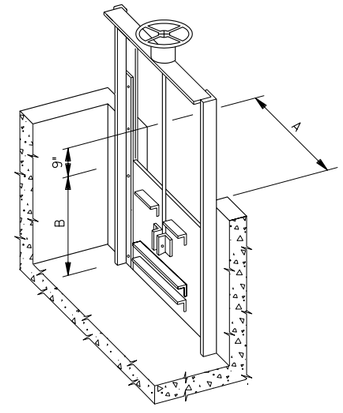

FLUME OUTLET DETAIL

NOTES:

1. USE LIFT GATE WHEN OPENING IS EQUAL TO OR EXCEEDS AN AREA OF 5 SQUARE FEET.
2. GATES AND FRAMES: OF THE TYPE SHOWN AND BE EITHER THE FLAT BACK SEAT OR SPIGOT BACK SEAT TYPES WITH A THROUGH FLUSH BOTTOM OPENING. EQUIVALENT GATE AND FRAME TYPES ACCEPTABLE, SUBJECT TO THE APPROVAL OF SHOP DRAWING BY THE ENGINEER.
3. DESIGN SLIDE GATES AND FRAMES FOR NOT LESS THAN 5 FEET OF FACE PRESSURE ABOVE THE GATE OPENING AND ZERO BACK PRESSURE. IN ALL CASES OF INSTALLATION, SUBMIT TO THE ENGINEER FOR APPROVAL THE MANUFACTURERS SPECIFICATIONS AND RECOMMENDATIONS TO INCLUDE LIFTING DEVICE TYPE.

REVISIONS

NO.	DATE	APPR.	REMARKS

UTAH DEPARTMENT OF TRANSPORTATION
STANDARD DRAWINGS FOR ROAD AND BRIDGE CONSTRUCTION
SALT LAKE CITY, UTAH

RECOMMENDED FOR APPROVAL — JAN.01.2005 DATE — DEPUTY DIRECTOR

CHAIRMAN STANDARDS COMMITTEE APPROVED — JAN.01.2005 DATE

STANDARD SCREW GATE AND FRAME

STD DWG
GF 15

DGN File:N:\Esa\Standard Drawings\Imperial\2005Approved\Grates Frames and Trash Racks (GF)\gf15.dgn
15-DEC-2004

MEDIAN WITH RAISED ISLAND

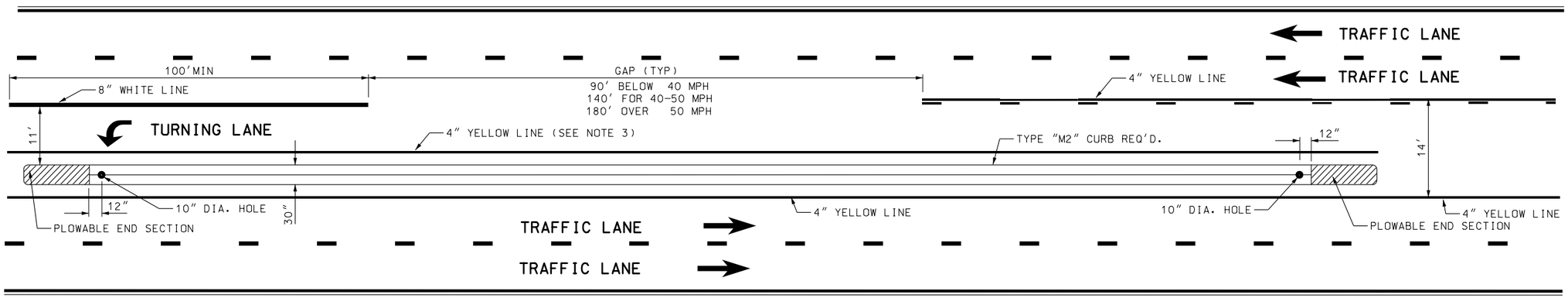

RAISED ISLAND DETAIL
TYPE "M2" CURB

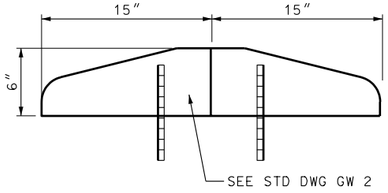

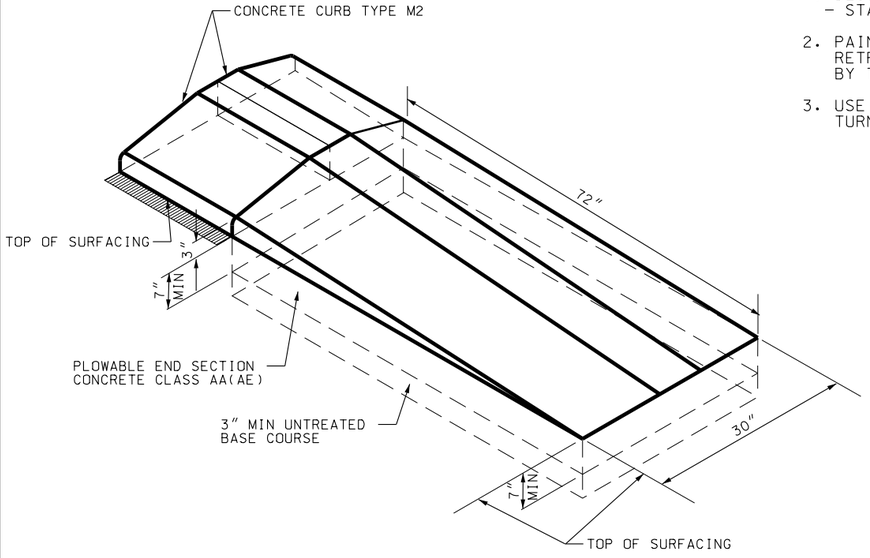

NOTES:

1. DESIGN TO SHOW CONTROL POINTS – STATION & OFFSET.
2. PAINT ISLAND CURBS WITH RETROREFLECTIVE PAINT AS DETERMINED BY THE DIRECTION OF TRAVEL.
3. USE OF 4" YELLOW LINE INSIDE LEFT TURN LANE OPTIONAL.

RAISED ISLAND DETAIL
TYPE "B5" CURB

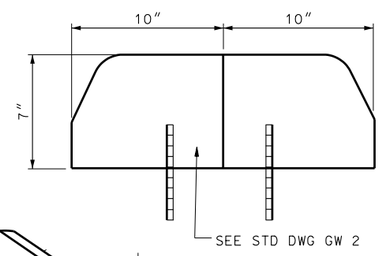

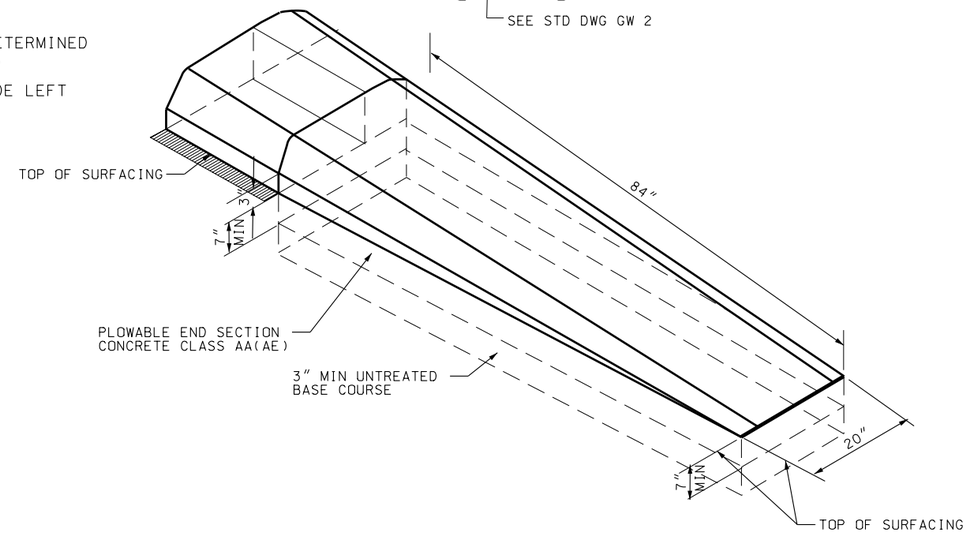

PLOWABLE END SECTION DETAILS

REVISIONS

NO.	DATE	APPR.	REMARKS

UTAH DEPARTMENT OF TRANSPORTATION
STANDARD DRAWINGS FOR ROAD AND BRIDGE CONSTRUCTION
SALT LAKE CITY, UTAH

RECOMMENDED FOR APPROVAL — JAN.01.2005 DATE
CHAIRMAN STANDARDS COMMITTEE
APPROVED — JAN.01.2005 DATE
DEPUTY DIRECTOR

RAISED MEDIAN AND PLOWABLE END SECTION

STANDARD DRAWING TITLE

STD DWG
GW 1

DGN File:N:\Esd\Standard_Drawings\Imperial\2005Approved\General Road Work (GW)\gw01.dgn
15-DEC-2004

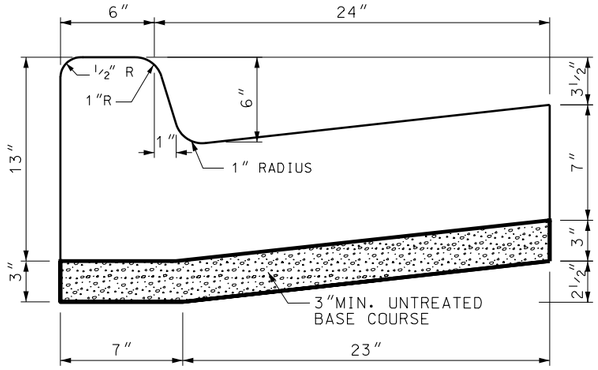

TYPE B1

CURB & GUTTER
AREA = 1.680 SQ.FT.

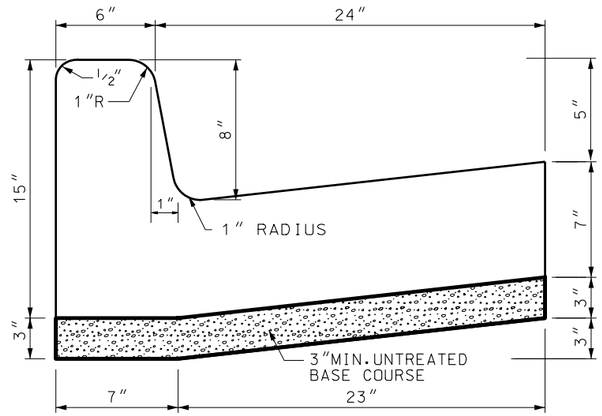

TYPE B2

CURB & GUTTER
AREA = 1.765 SQ.FT.

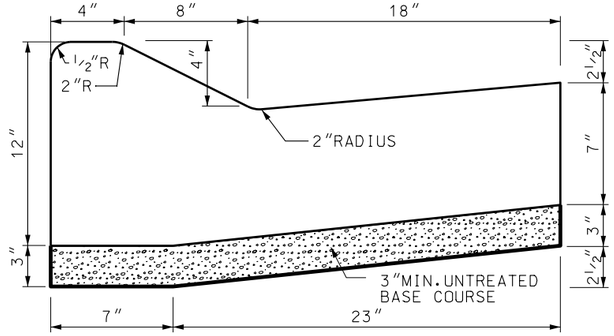

TYPE M1

CURB & GUTTER
AREA = 1.700 SQ.FT.

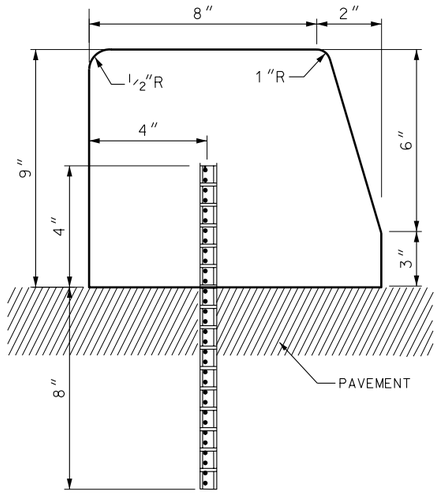

TYPE B3

CURB
AREA = 0.580 SQ.FT.

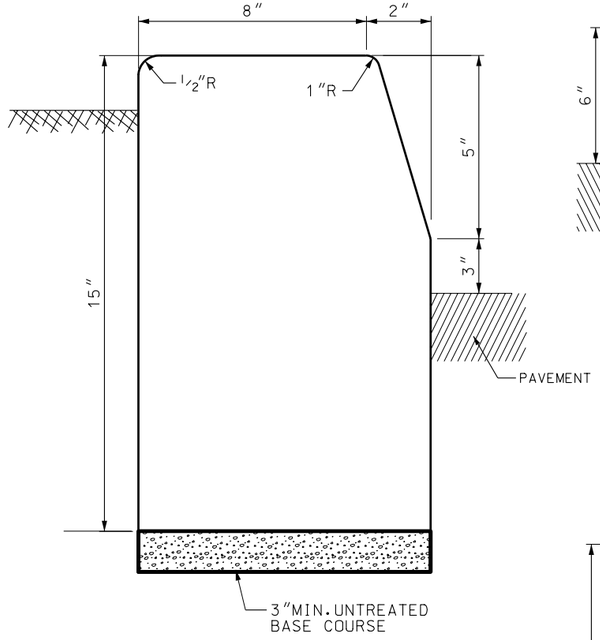

TYPE B4

CURB
AREA = 1.033 SQ.FT.

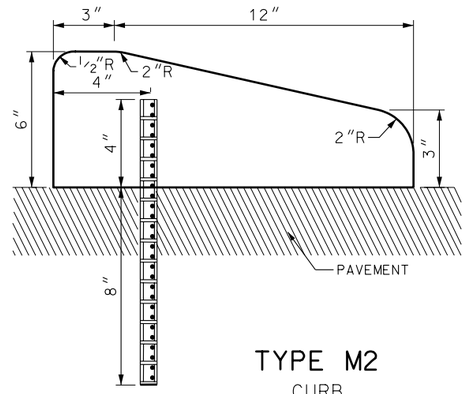

TYPE M2

CURB
AREA = 0.484 SQ.FT.

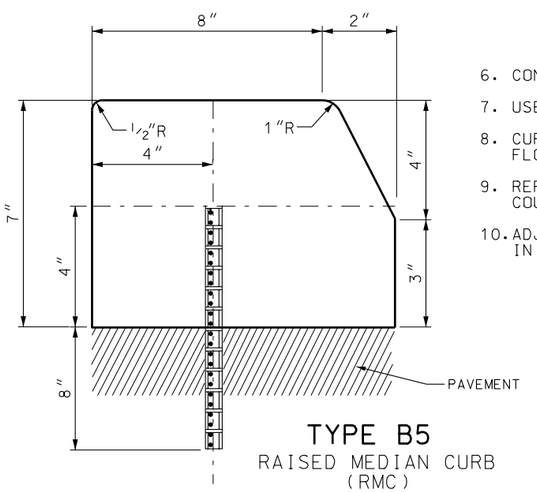

TYPE B5

RAISED MEDIAN CURB
(RMC)
AREA = 0.490 SQ.FT.

NOTES:

1. DRAINAGE CURBS: TYPE B1,B2 & M1
2. MOUNTABLE CURBS: TYPES M1 & M2 FOR APPLICATION REFER TO THE AASHTO POLICY ON GEOMETRIC DESIGN OF HIGHWAYS AND STREETS.
3. CURBS TYPES B1, B2, B3, B4 & B5 USED WITH DESIGN SPEED UP TO 40 MPH EXCEPT IN PREDOMINATELY URBAN OR RAPIDLY DEVELOPING RURAL AREAS WHERE CURB MAY BE USED WITH DESIGN SPEEDS UP TO 50 MPH.
4. DOWELS: 3/4" DEFORMED BARS ON 5' MAX.CENTERS.
5. PRECAST CURBS:
   A. MINIMUM OF 10' IN LENGTH.
   B. DOWELS AT A MINIMUM OF 3 PER 10' LENGTH.
   C. INCLUDE ADEQUATE REINFORCING STEEL TO WITH STAND HANDLING STRESSES.
6. CONCRETE CLASS AA "AE"
7. USE TYPE B4 ONLY AS BORDER CURB.
8. CURB HEIGHT IS MEASURED VERTICALLY FROM THE FLOW LINE OF THE GUTTER TO TOP BACK OF CURB.
9. REFER TO ROADWAY PLANS FOR UNTREATED BASE COURSE SIZE.
10. ADJUST CURB FACE TO 4" MAXIMUM HEIGHT WHEN USED IN CONJUNCTION WITH GUARDRAIL BARRIER.

REVISIONS

NO.	DATE	APPR.	REMARKS

UTAH DEPARTMENT OF TRANSPORTATION
STANDARD DRAWINGS FOR ROAD AND BRIDGE CONSTRUCTION
SALT LAKE CITY, UTAH

RECOMMENDED FOR APPROVAL — JAN.01.2005 DATE
CHAIRMAN STANDARDS COMMITTEE APPROVED — JAN.01.2005 DATE
DEPUTY DIRECTOR

CONCRETE CURB AND GUTTER

STANDARD DRAWING TITLE

STD DWG
GW 2

DGN File:N:\East\Standard Drawings\Imperial\2005Approved\General Road Work (GW)\gw02.dgn
15-DEC-2004

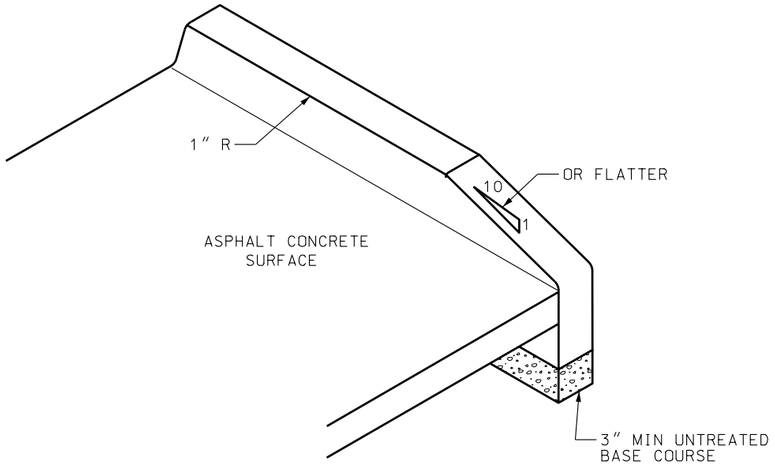

TYPICAL
CURB END DETAIL

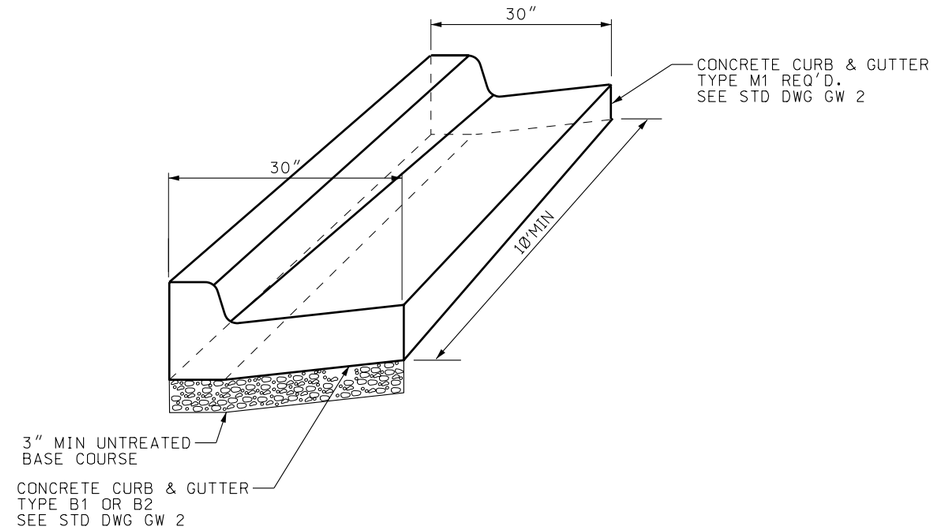

CURB & GUTTER
TRANSITION DETAIL

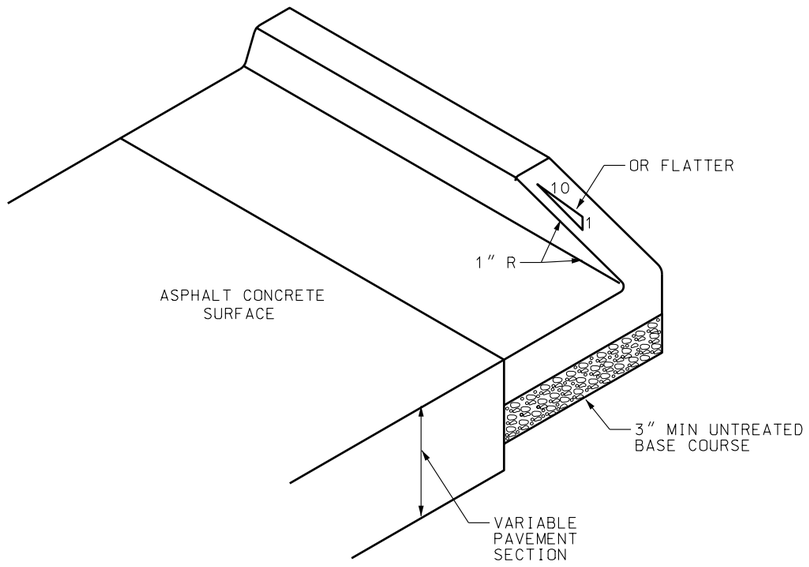

TYPICAL
CURB & GUTTER
END DETAIL

REVISIONS

NO.	DATE	APPR.	REMARKS

UTAH DEPARTMENT OF TRANSPORTATION
STANDARD DRAWINGS FOR ROAD AND BRIDGE CONSTRUCTION
SALT LAKE CITY, UTAH

RECOMMENDED FOR APPROVAL — JAN.01.2005 DATE
CHAIRMAN STANDARDS COMMITTEE
APPROVED — JAN.01.2005 DATE
DEPUTY DIRECTOR

CONCRETE
CURB AND GUTTER
DETAILS

STANDARD DRAWING TITLE

STD DWG
GW 3

DGN File:N:\Eng\Standard_Drawings\Imperial\2005Approved\General Road Work (GW)\gw03.dgn
15-DEC-2004

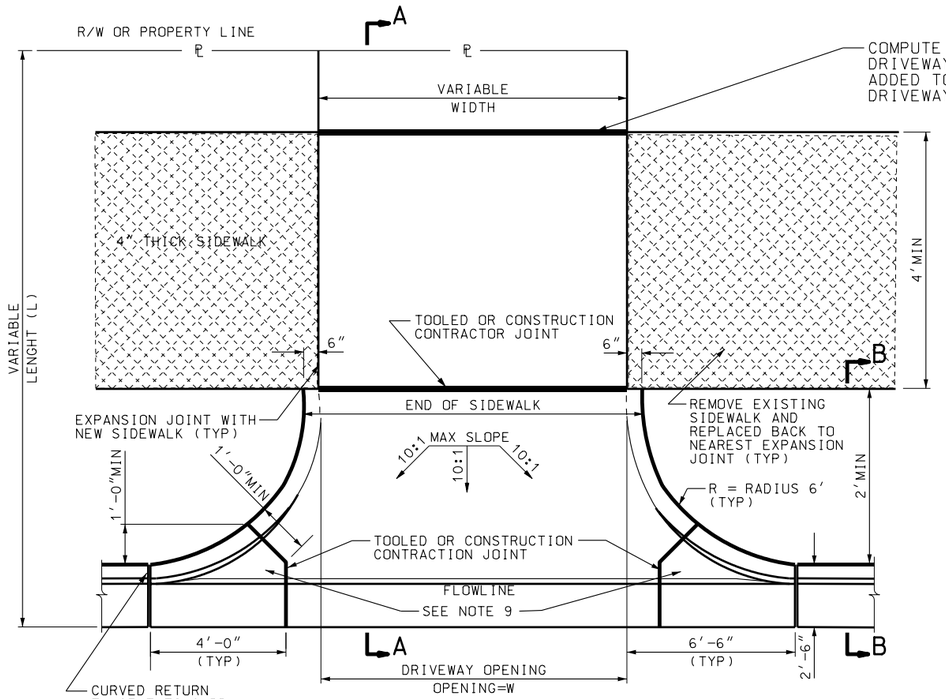

OPEN CONCRETE DRIVEWAY

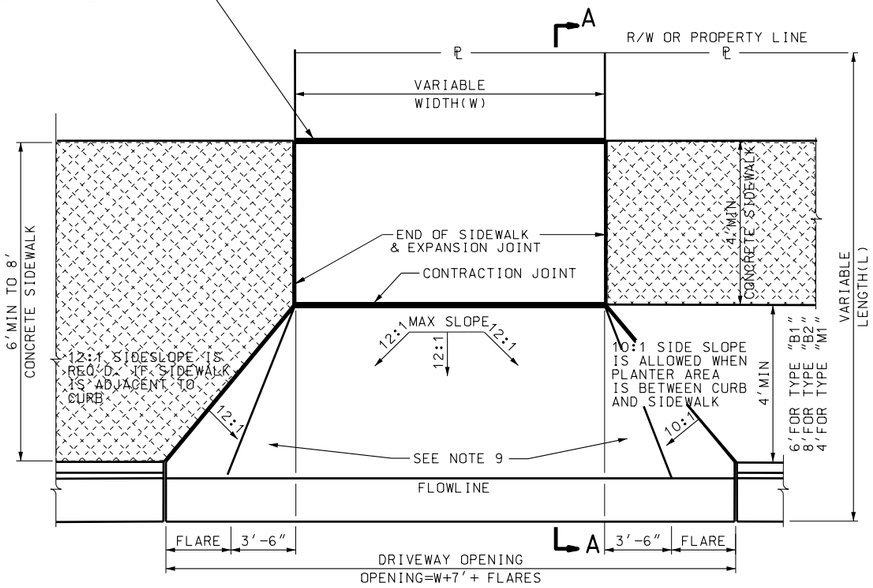

FLARED DRIVEWAY

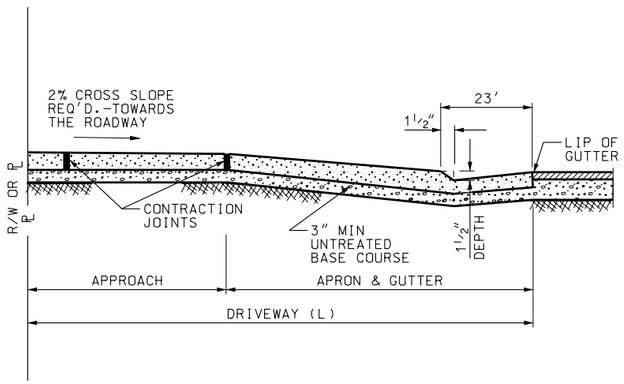

SECTION A-A

DRIVEWAY RADIUS AND FLARE AREA CHART			
OPEN CONCRETE DRIVEWAY	**ft²**	**FLARED DRIVEWAY**	**ft²**
6' RADIUS	44.13	12:1 FLARES	
		1- TYPE "B1" CURB & GUTTER	88.09
		2- TYPE "B2" CURB & GUTTER	129.92
		3- TYPE "M1" CURB & GUTTER	44.56
NOTE:			
ft2 QUANTITY = BOTH SIDES OF			
DRIVEWAY ROUNDED TO THE		10:1 FLARES	
NEAREST 0.5 ft²		1- TYPE "B1" CURB & GUTTER	78.90
		2- TYPE "B2" CURB & GUTTER	115.39
		3- TYPE "M1" CURB & GUTTER	34.66

NOTES:

1. DRIVEWAY DIMENSIONS (MAX.& MIN.) ARE LOCATED IN UDOT "MANUAL FOR THE ACCOMMODATION OF UTILITIES AND THE CONTROL AND PROTECTION OF STATE HIGHWAY RIGHTS OF WAY" CURRENT EDITION.
2. MAXIMUM DISTANCE BETWEEN TOOLED OR CONSTRUCTION JOINTS 10' LATERALLY AND LONGITUDINALLY SPACED EQUALLY.
3. PROVIDE EXPANSION JOINTS WHERE CONCRETE SIDEWALK BUTTS AGAINST CONCRETE DRIVEWAYS AND IN CONCRETE SIDEWALK AT 30 FEET INTERVALS.
4. DO NOT PAY FOR SIDEWALK INSIDE THE DRIVEWAY LIMITS (WIDTH AND LENGTH)
5. OPEN CONCRETE DRIVEWAY - FLARED DRIVEWAY
   A: RESIDENTIAL = 6 inch THICK. COMMERCIAL = 7 inch THICK
   B: EXTEND DRIVEWAY APPROACH TO R/W - PROPERTY LINE
   C: IF THE GRADES SHOWN ON THE SLOPE DETAIL CANNOT BE MET, DEPRESS THE LONGITUDINAL SLOPE OF THE SIDEWALK AT A RATE OF 5 PERCENT TO MEET THE APRON - APPROACH ELEVATION.
6. USE CLASS AA(AE) CONCRETE FOR SIDEWALK AND DRIVEWAYS
7. USE UNTREATED BASE COURSE UNDER ALL SIDEWALKS AND DRIVEWAYS.
8. 10:1 = 10% SLOPE; 12:1 = 8.33% SLOPE.
9. QUANTITIES FOR DRIVEWAYS INCLUDE RADIUS AND FLARES TO LIP OF GUTTER.

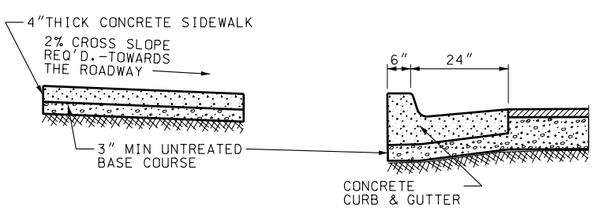

SECTION B-B

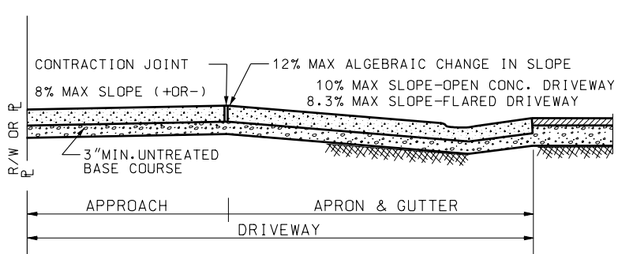

SLOPE DETAIL

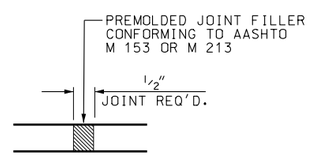

EXPANSION-CONTRACTION JOINT DETAIL

REVISIONS

NO.	DATE	APPR.	REMARKS

UTAH DEPARTMENT OF TRANSPORTATION
STANDARD DRAWINGS FOR ROAD AND BRIDGE CONSTRUCTION
SALT LAKE CITY, UTAH

RECOMMENDED FOR APPROVAL — JAN.01.2005 DATE
CHAIRMAN STANDARDS COMMITTEE
APPROVED — JAN.01.2005 DATE
DEPUTY DIRECTOR

CONCRETE DRIVEWAYS AND SIDEWALKS

STANDARD DRAWING TITLE

STD DWG
GW 4

DGN File:N:\East\Standard Drawings\Imperial\2005Approved\General Road Work (GW)\gw04.dgn
15-DEC-2004

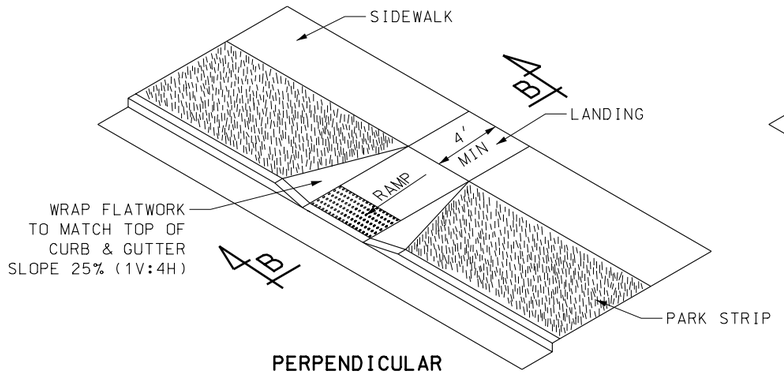

PERPENDICULAR PEDESTRIAN RAMP

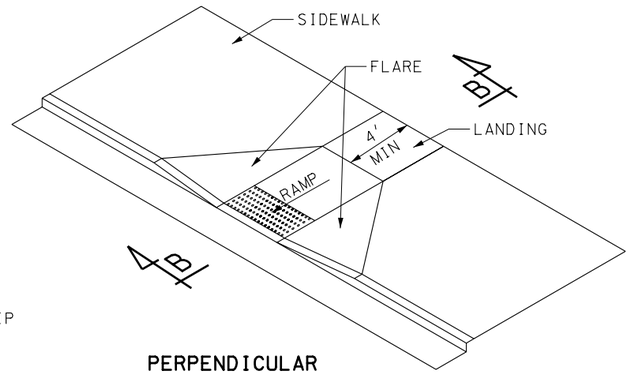

PERPENDICULAR PEDESTRIAN RAMP

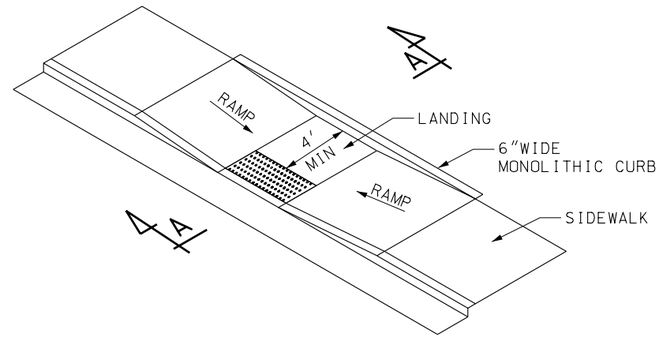

PARALLEL PEDESTRIAN RAMP

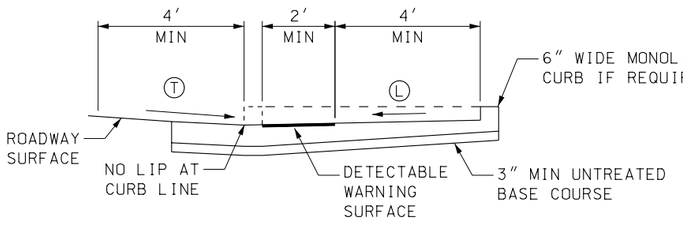

SECTION A–A

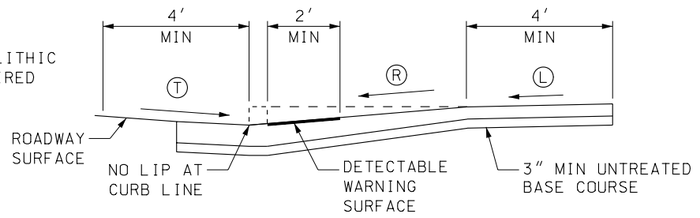

SECTION B–B

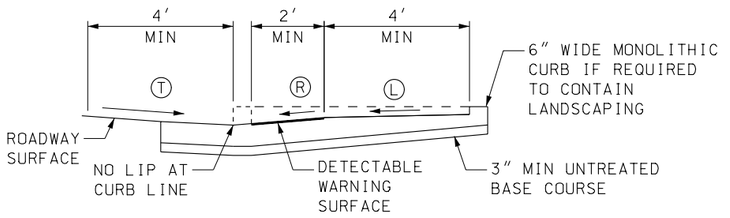

SECTION C–C

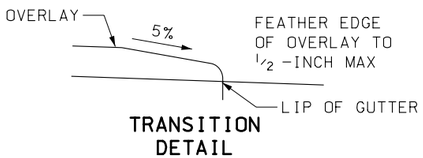

TRANSITION DETAIL

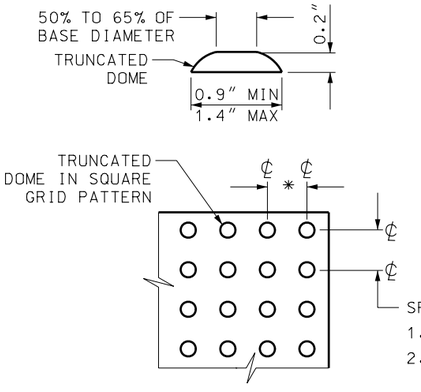

DETECTABLE WARNING SURFACE DETAIL A

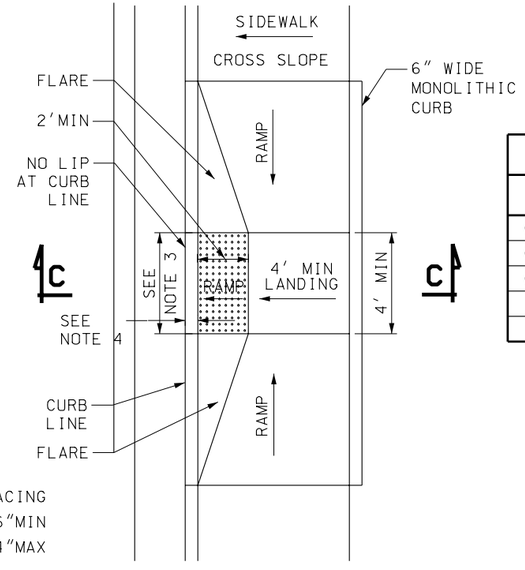

PEDESTRIAN ACCESS RAMP DETAIL

SLOPE TABLE			
	ITEM	MAX. RUNNING SLOPE *	MAX. CROSS SLOPE *
Ⓛ	LANDING	2% (1V:48H)(b)	2% (1V:48H) (b)
Ⓡ	RAMP	8.33% (1V:12H)(c)	2% (1V:48H) (d)
Ⓣ	TRANSITION	5% (1V:20H)(a)	2% (1V:48H) (d)
	SIDEWALK	--	2% (1V:48H)
	FLARE	10% (1V:10H)	--

* RUNNING SLOPE IS IN THE DIRECTION OF PEDESTRIAN TRAVEL, WHILE CROSS SLOPE IS PERPENDICULAR TO PEDESTRIAN TRAVEL.

(a) TRANSITION RUNNING SLOPE NEEDS TO BE CONSTANT ACROSS ENTIRE CURB CUT. WARP GUTTER PAN TO MEET REQUIRED TRANSITION SLOPE AT CURB CUT.

EXCEPTION:

(b) SLOPE REQUIREMENTS DO NOT APPLY AT MID-BLOCK CROSSINGS.

(c) PARALLEL RAMPS ARE NOT REQUIRED TO EXCEED 15-FEET IN LENGTH.

(d) CROSS SLOPE REQUIREMENT DOES NOT APPLY AT PERPENDICULAR RAMP MID-BLOCK CROSSING.

NOTES:

1. CONFIGURATION OF RAMPS AND LANDINGS MAY BE CHANGED BUT MUST MEET PEDESTRIAN RAMP DIMENSION AND SLOPE REQUIREMENTS. SPECIFIC SITE CONDITIONS WILL VARY. THE USE OF FLARES, CURBWALLS, ETC. ARE AT THE DISCRETION OF THE ENGINEER.
2. PERPENDICULAR AND PARALLEL PEDESTRIAN RAMPS SHOWN ON THIS DRAWING ARE ACCEPTABLE FOR USE AT MID BLOCK OR CORNER INSTALLATIONS. REFER TO STD DWG GW 5B AND GW 5C FOR EXAMPLES OF CORNER INSTALLATIONS.
3. PROVIDE DETECTABLE WARNING SURFACE FOR FULL WIDTH OF RAMP, LANDING, OR CURB CUT. SEE DETAIL A FOR DETECTABLE WARNING SURFACE DIMENSIONS.
4. LOCATE DETECTABLE WARNING SURFACE SO THAT THE EDGE NEAREST THE STREET IS 6" TO 8" FROM THE CURB LINE.
5. PROVIDE DETECTABLE WARNING SURFACE THAT CONTRASTS WITH ADJACENT WALKING SURFACE, EITHER LIGHT-ON-DARK OR DARK-ON-LIGHT. ACCEPTABLE COLORS INCLUDE: RED, BLACK, OR YELLOW.
6. USE CLASS AA(AE) CONCRETE.
7. USE UNTREATED BASE COURSE UNDER ALL CONCRETE FLATWORK.

REVISIONS			
NO.	DATE	APPR.	REMARKS
1	06/30/05	L.M.	PERPENDICULAR PEDESTRIAN RAMP DETAIL MODIFIED.
2	02/23/06	L.M.	SECTION A-A, B-B, AND C-C MODIFIED TO CLARITY "T" DIMENSION.

UTAH DEPARTMENT OF TRANSPORTATION

STANDARD DRAWINGS FOR ROAD AND BRIDGE CONSTRUCTION

SALT LAKE CITY, UTAH

RECOMMENDED FOR APPROVAL — DEPUTY DIRECTOR — FEB.23,2006 DATE

CHAIRMAN STANDARDS COMMITTEE APPROVED — FEB.23,2006 DATE

PEDESTRIAN ACCESS

STANDARD DRAWING TITLE

STD DWG

GW 5A

DGN File:L:\Standard Drawings\Imperial\2005Approved\xChanges05approved\gw05A.dgn

01-MAR-2006

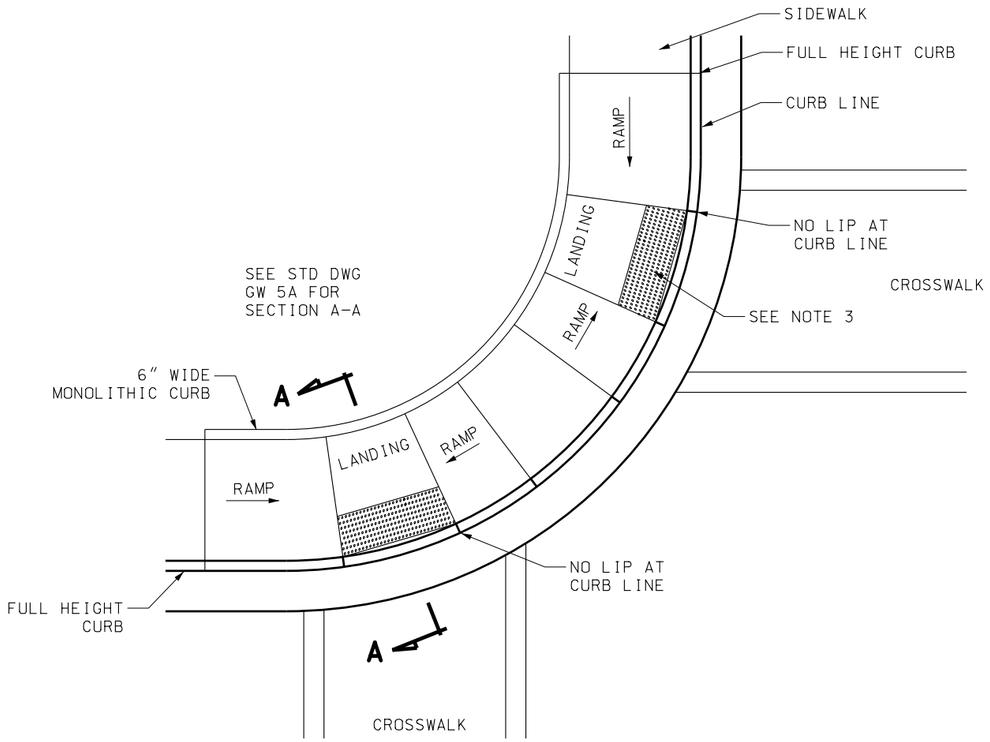

CORNER PEDESTRIAN RAMP EXAMPLE (TWO RAMPS)

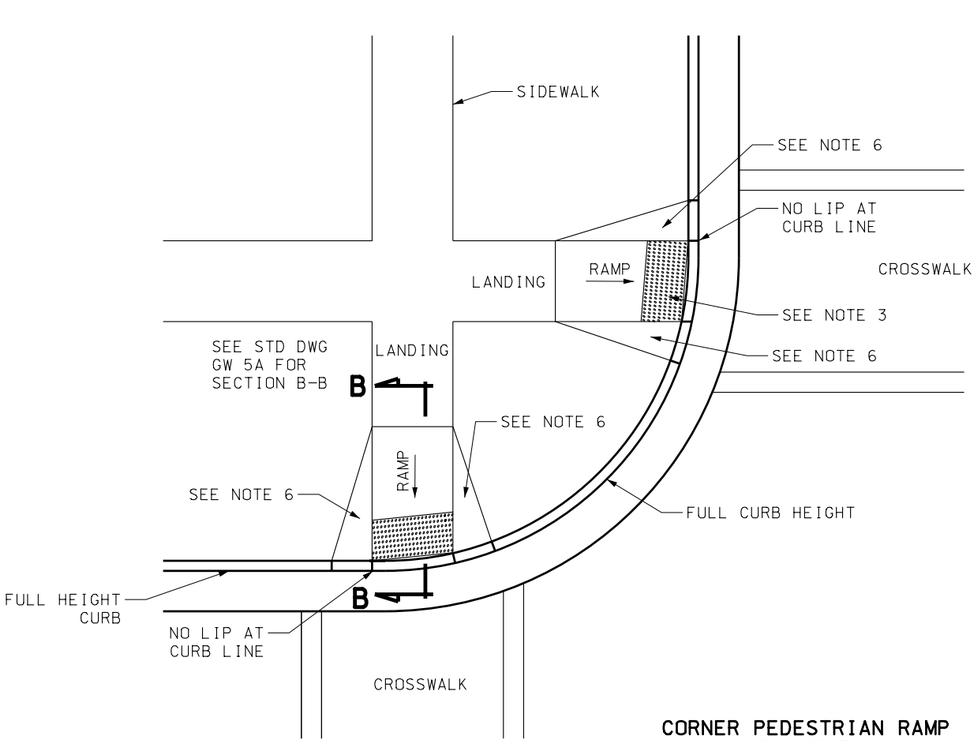

CORNER PEDESTRIAN RAMP EXAMPLE (TWO RAMPS)

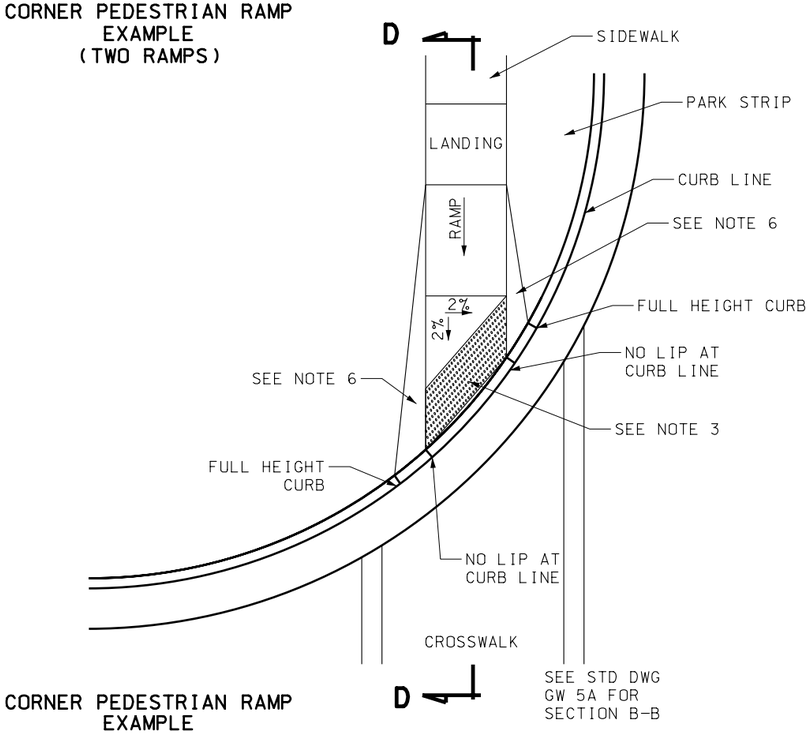

CORNER PEDESTRIAN RAMP EXAMPLE

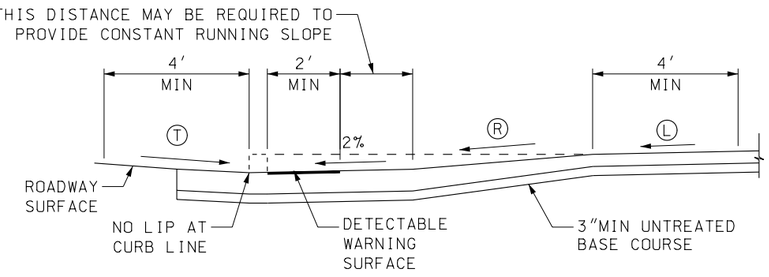

SECTION D-D

NOTES:

1. REFER TO STD DWG GW 5A FOR PEDESTRIAN ACCESS RAMP DETAIL AND SLOPE REQUIREMENTS.
2. PROVIDE DETECTABLE WARNING SURFACE FOR FULL WIDTH OF RAMP, LANDING, OR CURB CUT. SEE DETAIL A ON STD DWG GW 5A FOR DETECTABLE WARNING SURFACE DIMENSIONS.
3. LOCATE DETECTABLE WARNING SURFACE SO THAT THE EDGE NEAREST THE STREET IS 6" TO 8" FROM THE CURB LINE.
4. WHEN DETECTABLE WARNING SURFACE IS CUT, GRIND REMAINING PORTION OF ANY CUT DOMES. SEAL ALL CUT PANEL EDGES TO PREVENT WATER DAMAGE.
5. LOCATE CURB CUT WITHIN CROSSWALK.
6. WARP FLATWORK TO MATCH TOP OF CURB AND GUTTER SLOPE 25% (1V:4H).

REVISIONS

NO.	DATE	APPR.	REMARKS
1	06/30/05	L.M.	CORNER PEDESTRIAN RAMP EXAMPLE DETAIL MODIFIED.
2	02/23/06	L.M.	SECTION A-A, B-B, AND C-C MODIFIED TO CLARITY "T" DIMENSION.

UTAH DEPARTMENT OF TRANSPORTATION

STANDARD DRAWINGS FOR ROAD AND BRIDGE CONSTRUCTION

SALT LAKE CITY, UTAH

RECOMMENDED FOR APPROVAL — FEB.23,2006 DATE — DEPUTY DIRECTOR

CHAIRMAN STANDARDS COMMITTEE APPROVED — FEB.23,2006 DATE

PEDESTRIAN ACCESS

STANDARD DRAWING TITLE

STD DWG GW 5B

DGN File:L:\Standard Drawings\Imperial\2006Approved\Change6Approved\gw05b.dgn
01-MAR-2006

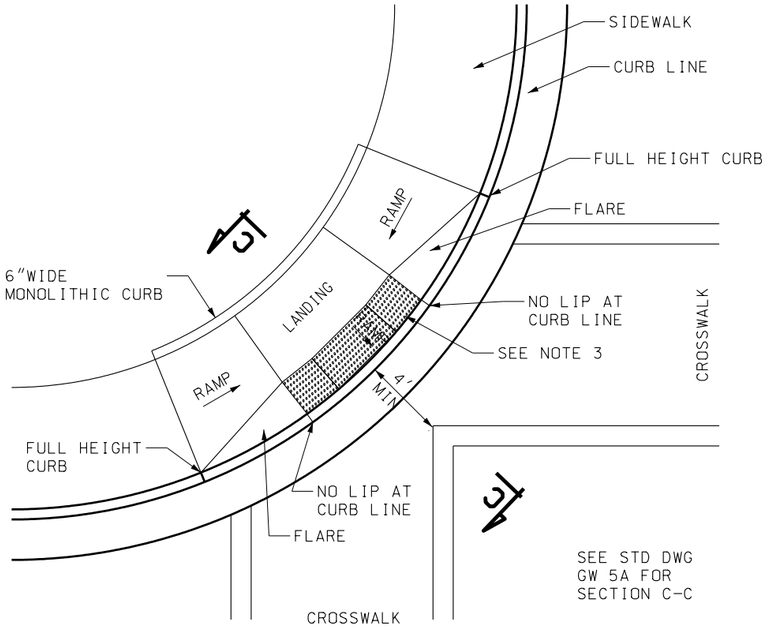

CORNER PEDESTRIAN RAMP
EXAMPLE

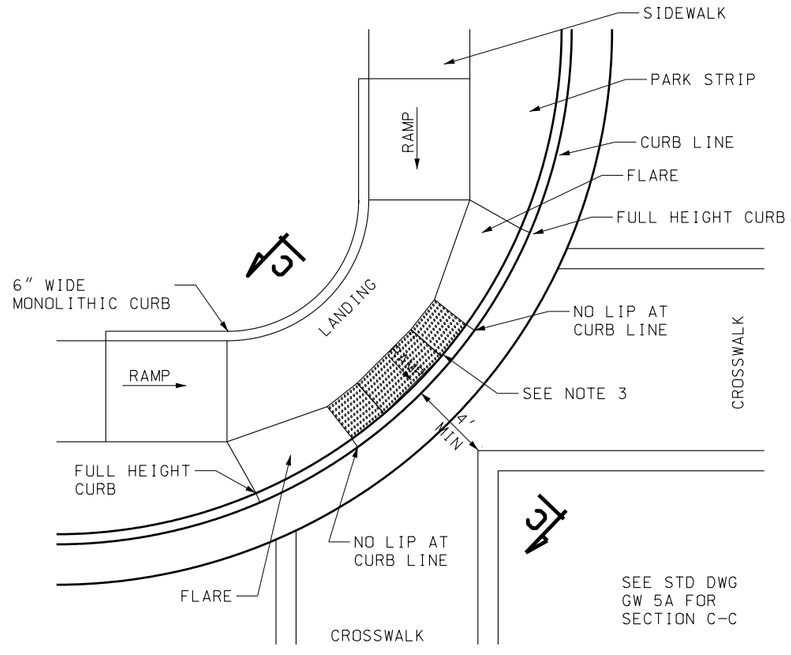

CORNER PEDESTRIAN RAMP
EXAMPLE

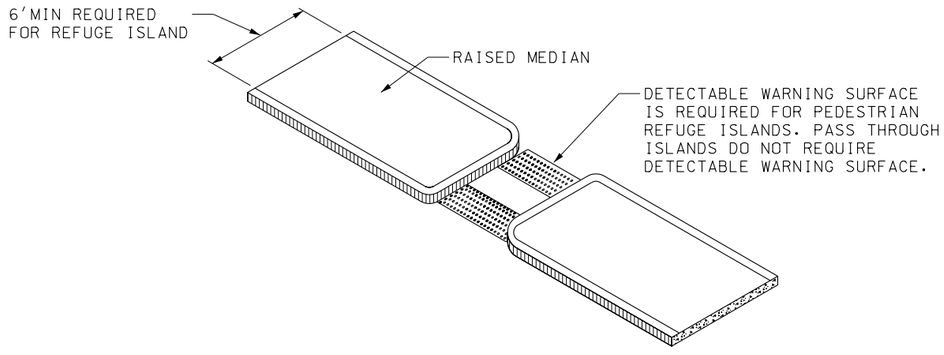

MEDIAN BREAK
EXAMPLE

NOTES:

1. REFER TO STD DWG GW 5A FOR PEDESTRIAN ACCESS RAMP DETAIL AND SLOPE REQUIREMENTS.
2. PROVIDE DETECTABLE WARNING SURFACE FOR FULL WIDTH OF RAMP, LANDING, OR CURB CUT. SEE DETAIL A ON STD DWG GW 5A FOR DETECTABLE WARNING SURFACE DIMENSIONS.
3. LOCATE DETECTABLE WARNING SURFACE SO THAT THE EDGE NEAREST THE STREET IS 6" TO 8" FROM THE CURB LINE.
4. WHEN DETECTABLE WARNING SURFACE IS CUT, GRIND REMAINING PORTION OF ANY CUT DOMES. SEAL ALL CUT PANEL EDGES TO PREVENT WATER DAMAGE.
5. LOCATE CURB CUT WITHIN CROSSWALK.

REVISIONS

NO.	DATE	APPR.	REMARKS

UTAH DEPARTMENT OF TRANSPORTATION
STANDARD DRAWINGS FOR ROAD AND BRIDGE CONSTRUCTION
SALT LAKE CITY, UTAH

RECOMMENDED FOR APPROVAL — JAN.01.2005 DATE
CHAIRMAN STANDARDS COMMITTEE
APPROVED — JAN.01.2005 DATE
DEPUTY DIRECTOR

PEDESTRIAN ACCESS

STANDARD DRAWING TITLE

STD DWG
GW 5C

DGN File:N:\Esd\Standard Drawings\Imperial\2005approved\General Road Work (GW)\gw05c.dgn
15-DEC-2004

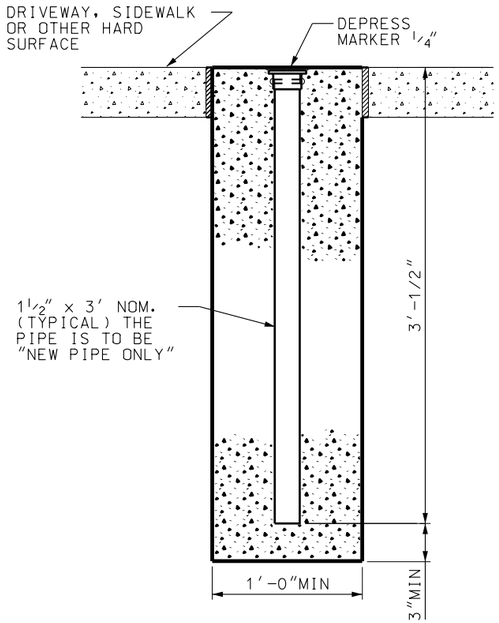

"A"

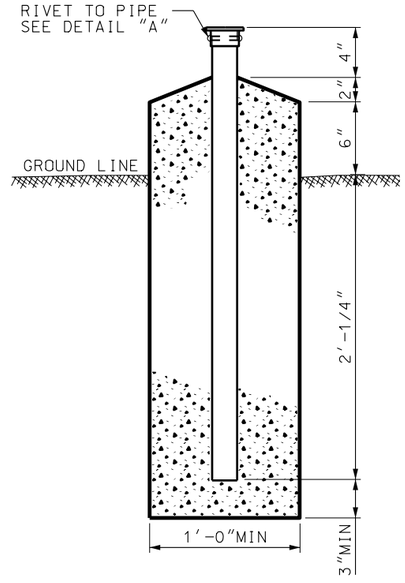

"B"

ALTERNATE INSTALLATIONS

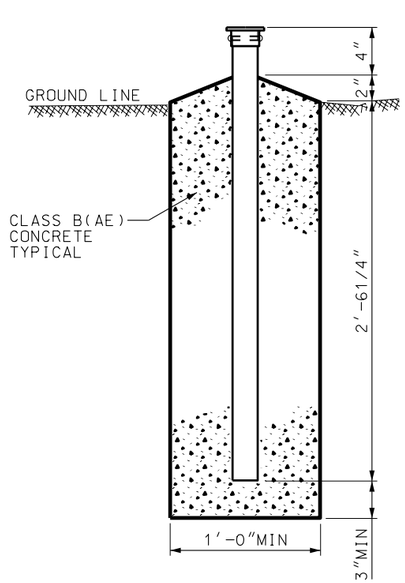

STANDARD INSTALLATION

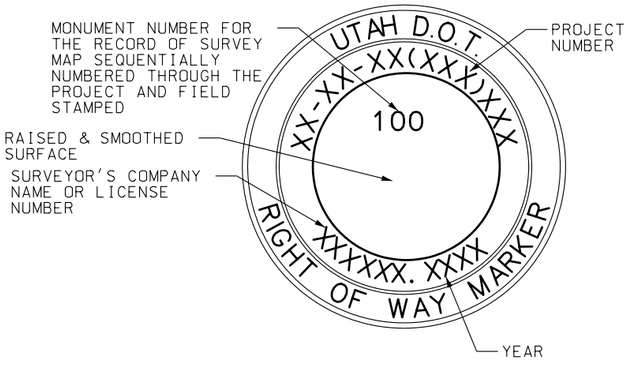

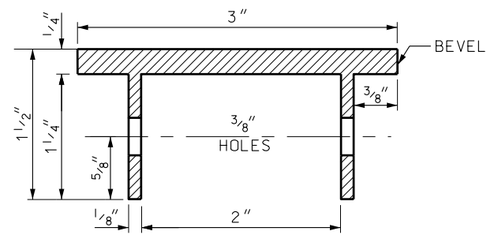

BRONZE CAP
DETAIL "A"

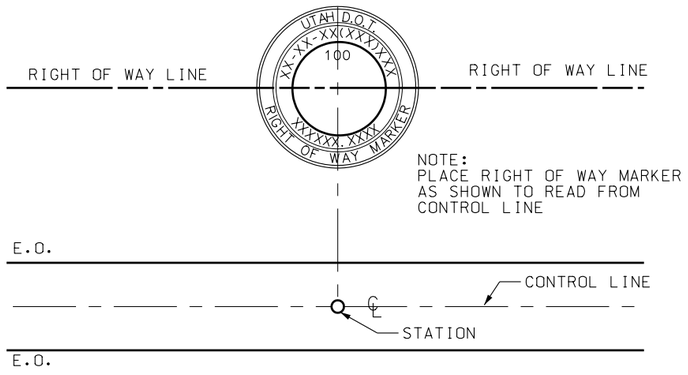

NOTES:

1. PLACE RIGHT OF WAY MARKERS AT EACH ANGLE POINT IN A RIGHT OF WAY LINE. PLACE RIGHT OF WAY MARKERS ON EACH RIGHT OF WAY LINE OPPOSITE THE PS, SC, CS AND ST OR OPPOSITE THE PC AND PT. WHERE THE RIGHT OF WAY PARALLELS THE CENTER LINE OF THE HIGHWAY AROUND A CURVE.
2. PLACE RIGHT OF WAY MARKERS IN ADDITION SO THAT NO INTERVAL WILL EXCEED 1000'. PLACE INTERMEDIATE MARKERS PREFERABLY ON SECTION LINES OR INTERSECTING PROPERTY LINES.
3. GRIND TO A SMOOTH SURFACE ALL EXPOSED SURFACES OF THE BRONZE CAP.
4. DEPRESS ALL LETTERS MINIMUM OF 1/16".
5. USE 3/16" HIGH LETTERS AND FIGURES.
6. USE ALTERNATE "A" INSTALLATION WHEN PLACING TOP OF BRONZE CAP FLUSH WITH HARD SURFACE AREA.
7. USE ALTERNATE "B" INSTALLATION WHEN PLACING MARKERS IN HEAVY BRUSH OR FOREST LANDS.
8. ON THE RECORD OF SURVEY MAP SHOW THE STATION, OFFSET, PROJECT COORDINATES AND ELEVATION.

REVISIONS

NO.	DATE	APPR.	REMARKS

UTAH DEPARTMENT OF TRANSPORTATION
STANDARD DRAWINGS FOR ROAD AND BRIDGE CONSTRUCTION
SALT LAKE CITY, UTAH

RECOMMENDED FOR APPROVAL — JAN.01.2005 DATE
CHAIRMAN STANDARDS COMMITTEE
APPROVED — JAN.01.2005 DATE
DEPUTY DIRECTOR

RIGHT OF WAY MARKER

STANDARD DRAWING TITLE

STD DWG
GW 6

DGN File:N:\Eng\Standard_Drawings\Imperial\2005Approved\General Road Work (GW)\gw06.dgn
15-DEC-2004

THROUGH ROAD SPEED MPH	D_A (FEET)	
	$NV_C V_M \leq 4000$	$NV_C V_M > 4000$
35	65	200
≥ 55	65	295

THROUGH ROAD SPEED MPH	D (FEET)		
	$\frac{V_C}{1.5N - .5} \leq 50$	$50 < \frac{V_C}{1.5N - .5} \leq 400$	$\frac{V_C}{1.5N - .5} > 400$
35	65	100	100
≥ 55	150	150	200

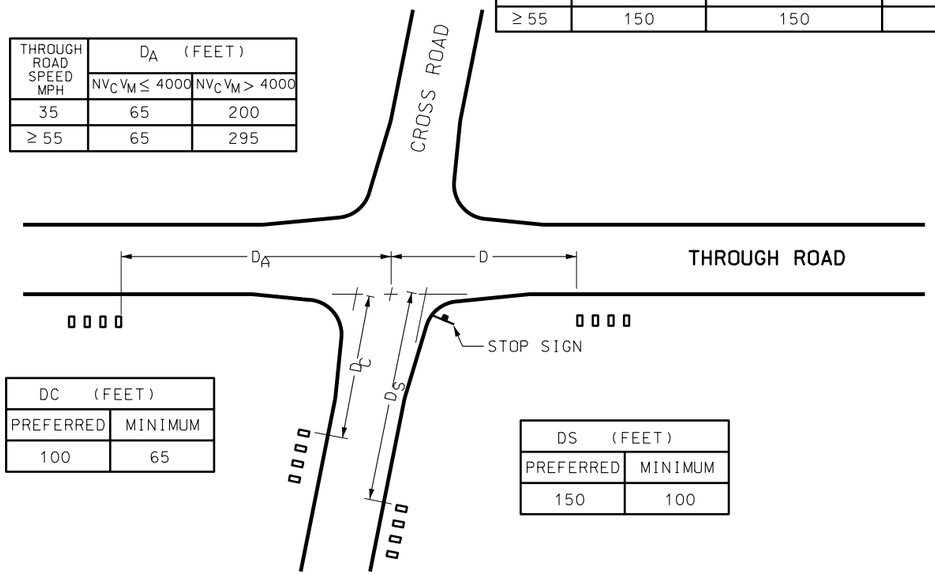

DC (FEET)	
PREFERRED	MINIMUM
100	65

DS (FEET)	
PREFERRED	MINIMUM
150	100

V_C = AVERAGE DAILY TRAFFIC ON CROSS ROAD VEHICLES PER DAY

V_M = AVERAGE DAILY TRAFFIC ON THROUGH ROAD VEHICLES PER DAY

N = NUMBER OF MAILBOXES AT MAIL STOP

MINIMUM CLEARANCE DISTANCE TO NEAREST MAILBOX IN MAIL STOPS AT INTERSECTIONS

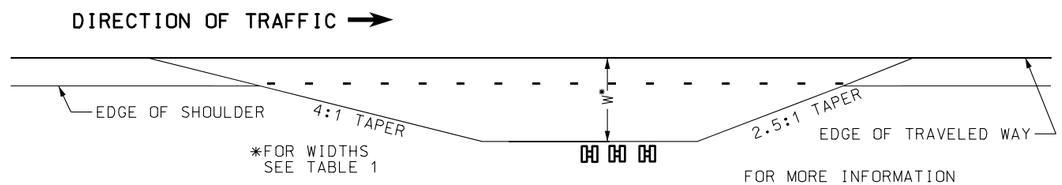

MAIL STOP LAYOUT FOR ROADS CARRYING LOW TRAFFIC SPEEDS ≤ 40 MPH AND FOR LOCAL AND COLLECTORS ROADS CARRYING ≤ 400 VEHICLES PER DAY

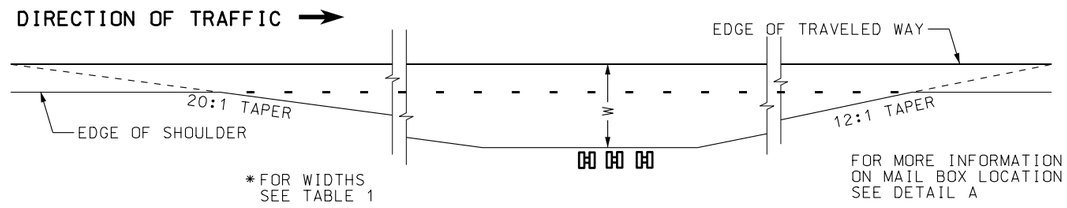

MAIL STOP LAYOUT FOR ROADS CARRYING HIGH SPEED TRAFFIC > 40 MPH

LATERAL PLACEMENT OF MAILBOXES

TABLE 1

HIGHWAY TYPE AND TRAFFIC CONDITIONS	WIDTH OF ALL-WEATHER SURFACE OF TURNOUT OR AVAILABLE SHOULDER AT MAILBOX - FEET		DISTANCE ROADSIDE FACE OF MAILBOX IS TO BE OFFSET BEHIND EDGE OF TURNOUT OR USABLE SHOULDER - INCHES	
	PREFERRED	MINIMUM	PREFERRED	MINIMUM
RURAL HIGHWAY ADT OVER 10,000 VPD	> 12	8	8 TO 12	0
RURAL HIGHWAY ADT = 1,500 TO 10,000 VPD	12	8		
RURAL HIGHWAY ADT = 100 TO 1500 VPD	10	8		
RURAL ROAD ADT UNDER 100 VPD	8	6		10
RURAL ROAD ADT UNDER 50 VPD SPEED = 40 MPH OR LESS	6	2		8
RESIDENTIAL STREET WITHOUT CURB OR ALL-WEATHER SHOULDER	2	0		8 *
CURBED RESIDENTIAL STREET	NOT APPLICABLE		8 TO 12 BEHIND TRAFFIC FACE OF CURB	6 BEHIND TRAFFIC FACE OF CURB

ADT = AVERAGE DAILY TRAFFIC VPD = VEHICLES PER DAY

* IF A TURN OUT IS PROVIDED, THIS MAY BE REDUCED TO ZERO.

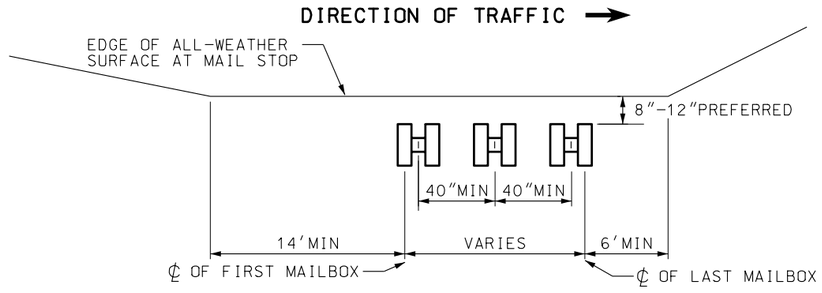

DETAIL A

MAILBOX LOCATION AT MAIL STOP

REVISIONS

NO.	DATE	APPR.	REMARKS

UTAH DEPARTMENT OF TRANSPORTATION

STANDARD DRAWINGS FOR ROAD AND BRIDGE CONSTRUCTION

SALT LAKE CITY, UTAH

RECOMMENDED FOR APPROVAL — DEPUTY DIRECTOR — JAN.01.2005 DATE

CHAIRMAN STANDARDS COMMITTEE APPROVED — JAN.01.2005 DATE

NEWSPAPER AND MAILBOX STOP LAYOUT

STANDARD DRAWING TITLE

STD DWG GW 7

DGN File\N:\Eng\Standard_Drawings\Imperial\2005Approved\General Road Work (GW)\gw07.dgn

15-DEC-2004

SHELF

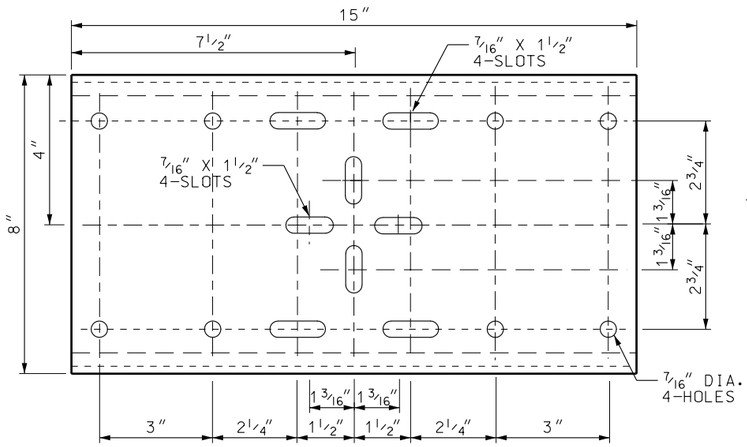

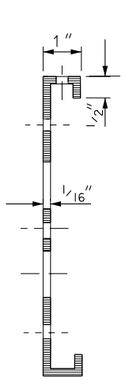

PLATFORM

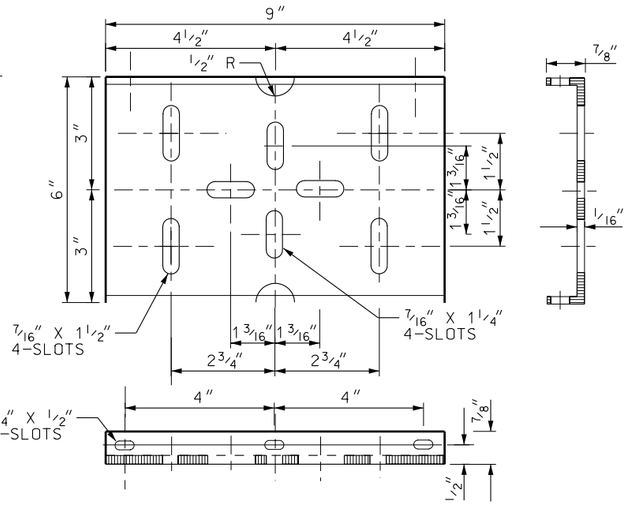

CANTILEVERED MAILBOX SUPPORT

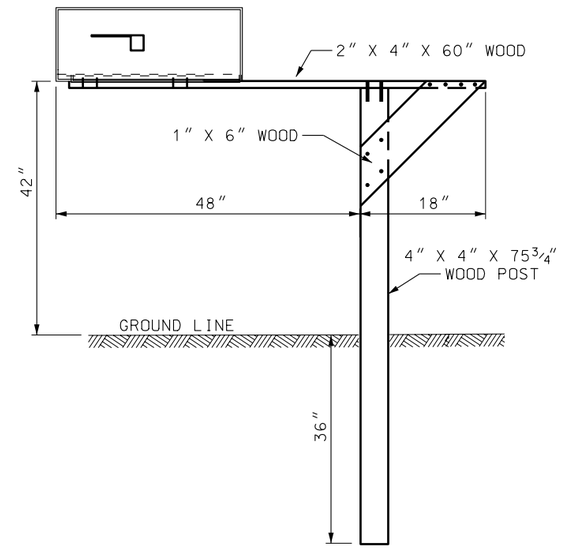

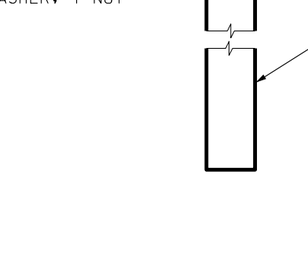

BRACKET

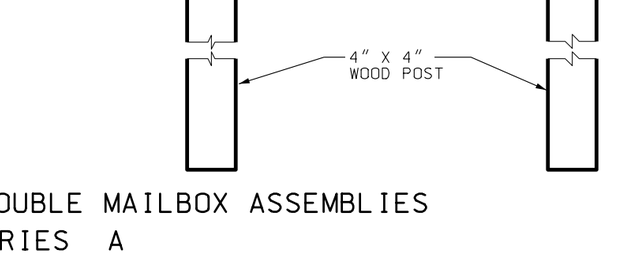

SPACING FOR MULTIPLE POST INSTALLATION

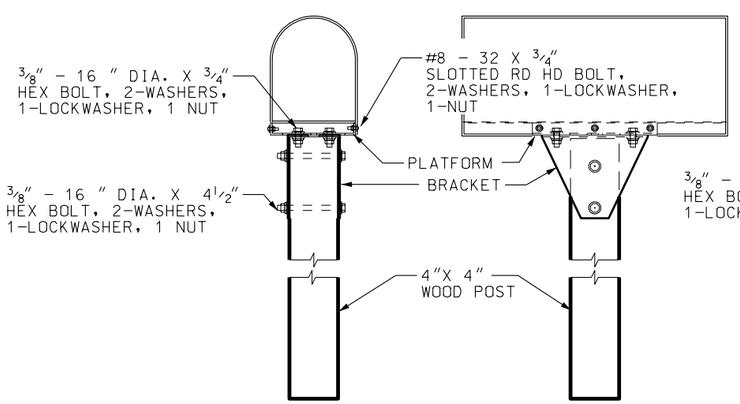

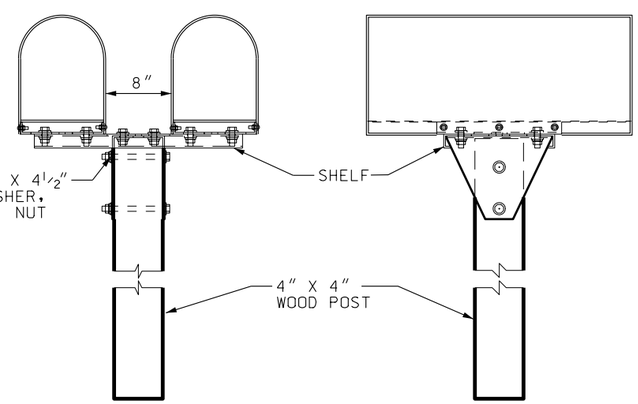

SINGLE AND DOUBLE MAILBOX ASSEMBLIES
SERIES A

NOTE:

1. USE OF ALTERNATE SYSTEMS MEETING NCHRP-350 REQUIREMENTS ALLOWED AS APPROVED BY THE REGION TRAFFIC ENGINEER.

REVISIONS				
NO.	DATE	APPR.	REMARKS	

UTAH DEPARTMENT OF TRANSPORTATION
STANDARD DRAWINGS FOR ROAD AND BRIDGE CONSTRUCTION
SALT LAKE CITY, UTAH

RECOMMENDED FOR APPROVAL — JAN.01.2005 DATE
CHAIRMAN STANDARDS COMMITTEE
APPROVED — JAN.01.2005 DATE
DEPUTY DIRECTOR

NEWSPAPER AND MAILBOX SUPPORT HARDWARE
STANDARD DRAWING TITLE

STD DWG
GW 8

DGN File: N:\Esd\Standard Drawings\Imperial\2005Approved\General Road Work (GW)\gw08.dgn
15-DEC-2004

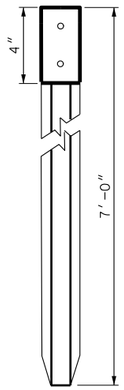

TYPE I

SINGLE UNIT

(OF COLOR SPECIFIED)

SEE NOTE 1

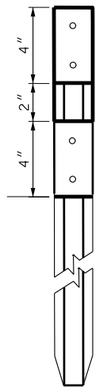

TYPE II

DOUBLE UNIT

SEE NOTE 1

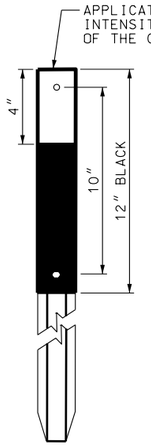

CULVERT MARKER

SEE NOTE 2

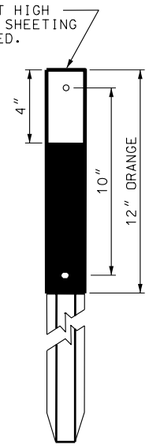

MAINTENANCE MARKER

SEE NOTE 2

FREEWAY CROSSOVER MARKER

SEE NOTE 9

NOTES:

1. USE GALVANIZED STEEL POSTS FABRICATED WITH $^{5}/_{16}$″ HOLES ON 1″ SPACING. PUNCH HOLES ON THE CENTERLINE OF THE POST. PLACE TOP HOLE 1″ FROM THE TOP OF POST. PUNCH HOLES THE FULL LENGTH OF THE POST.
2. PAINT THE SPECIFIED COLOR OR ATTACH 3″ X 12″ X 1/10″ COLORED PLASTIC ON CULVERT AND MAINTENANCE MARKERS. USE BLACK ABOVE ORANGE WHEN BOTH MARKERS (MAINTENANCE AND CULVERT) ARE REQUIRED ON ONE DELINEATOR.
3. MOUNT BARRIER REFLECTORS ON CONCRETE AND BRIDGE PARAPETS WITH TWO $^{1}/_{4}$″ X $^{1}/_{4}$″ METAL HIT ANCHORS.
4. MOUNT BARRIER REFLECTORS ON CONCRETE BARRIER AS SHOWN ON STD DWG BA 1B.
5. MOUNT STRAIGHT REFLECTORS ON WOOD POSTS WITH TWO $2^{1}/_{2}$″ ELECTRO GALVANIZED RING SHANK NAILS WITH NEOPRENE WASHERS.
6. MOUNT STRAIGHT REFLECTORS ON STEEL POSTS WITH TWO $^{1}/_{4}$″ X $^{3}/_{4}$″ BOLTS AND SELF LOCKING NUTS.
7. MOUNT BARRIER REFLECTORS ON GUARDRAIL POSTS AS SHOWN ON STD DWG BA 4A.
8. INSTALL DELINEATOR PLATE ON THE SIDE OF THE POST FACING TRAFFIC. PREFERRED ORIENTATION OF POST TO ONCOMING TRAFFIC IS AS SHOWN. HOWEVER, EXISTING POST WITH THE OPPOSITE ORIENTATION IS ACCEPTABLE. INSTALL ON OPEN FACE SIDE WITH TWO $^{1}/_{4}$″ DIAMETER EXPANSION RIVETS (GRIP RANGE $1^{3}/_{8}$″ TO $1^{5}/_{8}$″). INSTALL ON OPPOSITE SIDE WITH TWO $^{1}/_{4}$″ POP RIVETS WITH BACKING WASHERS.
9. REFER TO STD DWG ST 2 FOR FREEWAY CROSSOVER DELINEATION MARKINGS AND HARDWARE.

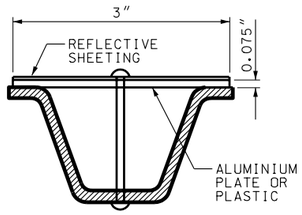

DELINEATOR INSTALLATION

SEE NOTE 8

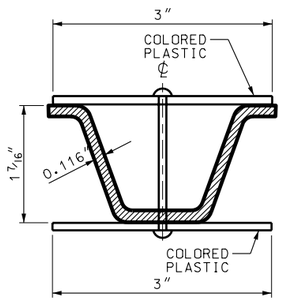

CULVERT/MAINTENANCE MARKER INSTALLATION

FOR 2 LB/FT POST WITH COLORED PLASTIC ATTACHED. SEE NOTE 2.

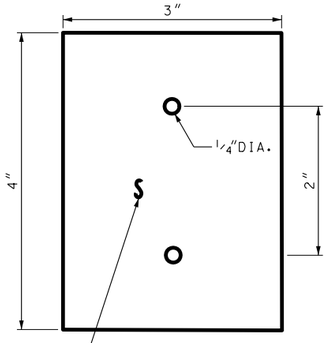

DELINEATOR PLATE

SEE NOTE 8

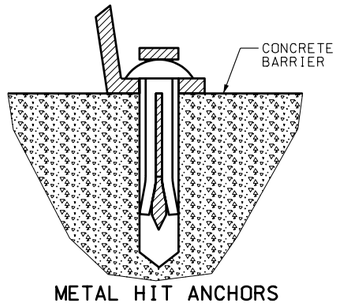

METAL HIT ANCHORS

SEE NOTE 3

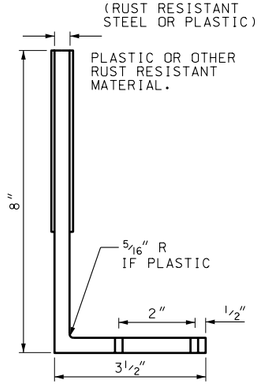

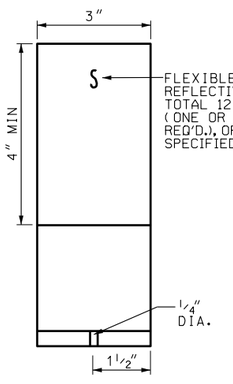

"L" REFLECTOR

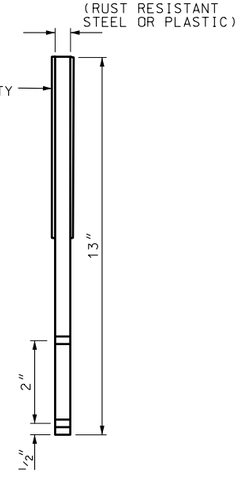

BARRIER REFLECTORS

SEE NOTES 3, 4, 5, 6, 7

STRAIGHT REFLECTOR

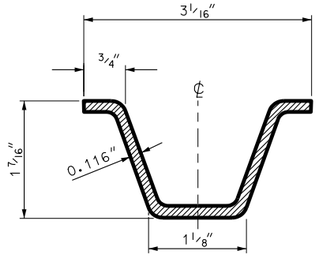

CROSS SECTION

FOR 2 LB/FT POST

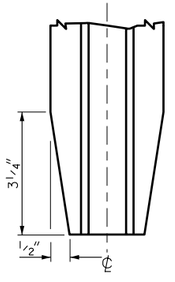

POST TAPER DETAIL

REVISIONS

NO.	DATE	APPR.	REMARKS

UTAH DEPARTMENT OF TRANSPORTATION

STANDARD DRAWINGS FOR ROAD AND BRIDGE CONSTRUCTION

SALT LAKE CITY, UTAH

RECOMMENDED FOR APPROVAL — JAN.01.2005 — DATE

CHAIRMAN STANDARDS COMMITTEE

APPROVED — JAN.01.2005 — DATE

DEPUTY DIRECTOR

DELINEATION HARDWARE

STANDARD DRAWING TITLE

STD DWG

GW 9

DGN File:N:\Est\Standard Drawings\Imperial\2005Approved\General Road Work (GW)\gw09.dgn

15-DEC-2004

ENTRANCE RAMP

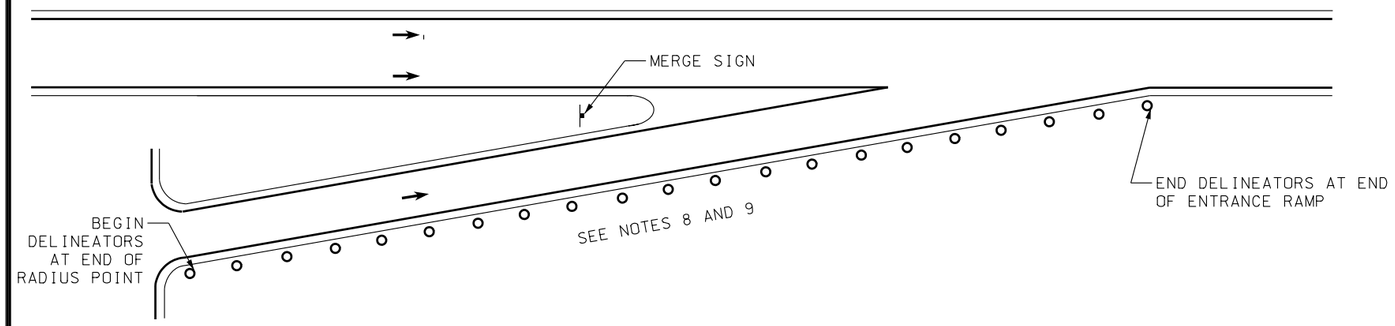

EXIT RAMP

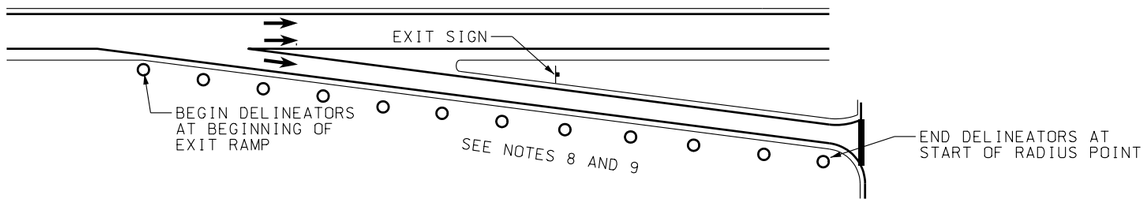

DELINEATOR SPACING FORMULA

THROUGH ANY CURVE, ADVANCE SIGHT TO HAVE AT LEAST THREE (3) UNIFORMLY SPACED DELINEATORS VISIBLE AT ALL TIMES. MAXIMUM SPACING NOT TO EXCEED 300 FEET, OR BE LESS THAN 20 FEET.

PLACE BY FORMULA $S = 3\sqrt{R-50}$
S = SPACING
R = CURVE RADIUS

* MAXIMUM SPACING NOT TO EXCEED 300'.

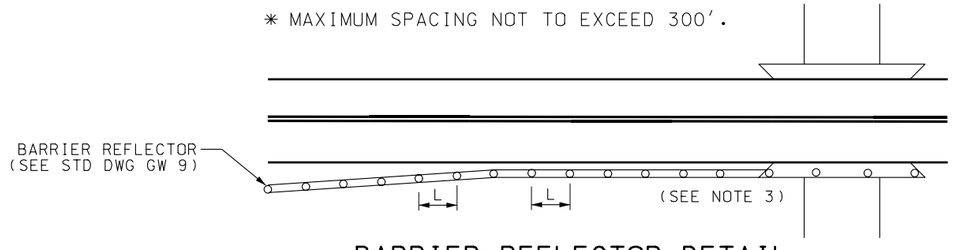

BARRIER REFLECTOR DETAIL
(SEE NOTE 2)

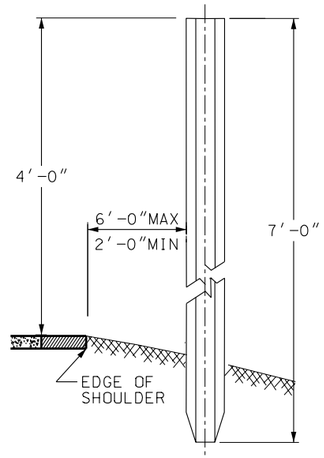

DELINEATOR

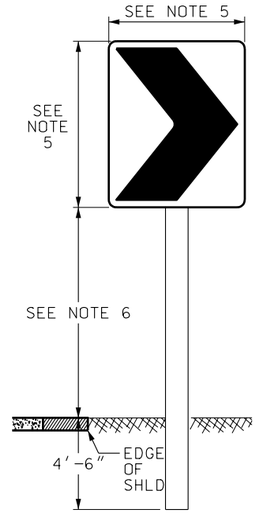

CHEVRON ALIGNMENT SIGN

NOTES:

1. BARRIERS ARE DEFINED AS BEING GUARDRAIL, CONCRETE BARRIER & BRIDGE PARAPET WALL.
2. MOUNT BARRIER REFLECTORS ON ENTIRE LENGTH OF BARRIER AS PER BARRIER TYPE STANDARD.

   USE REFLECTOR SPACING (L) OF 100 FEET IN PERMANENT LOCATIONS, AND 50 FEET FOR TEMPORARY SITUATIONS.

   USE REFLECTOR COLOR TO MATCH THE ADJACENT PAINT STRIPE.
3. IF GUARDRAIL IS NOT ATTACHED TO PARRAPET, INSTALL APPROPRIATE OBJECT MARKER OM-3R (OR L OR C) IN PLACE OF DELINEATOR AT LEADING EDGE OF BRIDGE PARAPET.
4. CHEVRON ALIGNMENT (W1-8) SIGNS MAY BE USED WHEN ADDITIONAL EMPHASIS AND GUIDANCE FOR A CHANGE IN HORIZONTAL ALIGNMENT IS NEEDED. THE W1-8 SIGN MAY BE USED TO SUPPLEMENT STANDARD DELINEATORS ON CURVES. THE W1-8 SIGN MAY BE USED TO SUPPLEMENT OR AS AN ALTERNATE TO THE LARGE ARROW (W1-6) SIGN.

   WHEN USED, INSTALL THE W1-8 SIGNS ON THE OUTSIDE OF A TURN OR CURVE, IN LINE WITH, AND AT APPROXIMATELY A RIGHT ANGLE TO APPROACHING TRAFFIC.

   THE W1-8 SIGN SHOULD BE VISIBLE FOR A SUFFICIENT DISTANCE TO PROVIDE THE ROAD USER WITH ADEQUATE TIME TO REACT TO THE CHANGE IN ALIGNMENT. SPACE THE SIGNS SUCH THAT THE ROAD USER ALWAYS HAS AT LEAST TWO SIGNS IN THEIR VIEW UNTIL THE CHANGE OF ALIGNMENT ELIMINATES THE NEED FOR A SIGN.
5. USE W1-8 SIGN SIZE AS FOLLOWS:

   a) FOR CONVENTIONAL ROADS USE 24" X 30".
   b) FOR EXPRESSWAYS USE 30"X 36".
   c) FOR FREEWAYS USE 36" X 48".
6. USE 7' MIN, 7'6" MAX MOUNTING HEIGHT ON INTERSTATE, EXPRESSWAY, AND URBAN AREAS. USE 5' MIN, 7'6" MAX IN RURAL AREAS.
7. USE CONSISTENT MOUNTING HEIGHT AT EACH LOCATION.
8. USE TYPE II DELINEATORS AT 300 FEET SPACING ON TANGENTS ALONG ALL ENTRANCE AND EXIT RAMPS AS SHOWN. USE DELINEATOR SPACING FORMULA FOR ALL RAMP CURVES. RAMP DELINEATORS ARE NOT REQUIRED WHERE CONTINUOUS LIGHTING IS IN OPERATION.
9. USE DELINEATORS ON THE LEFT SIDE OF ENTRANCE AND EXIT RAMPS FOR RIGHT HAND CURVES UPON APPROVAL OF THE REGION TRAFFIC ENGINEER.

REVISIONS

NO.	DATE	APPR.	REMARKS

UTAH DEPARTMENT OF TRANSPORTATION
STANDARD DRAWINGS FOR ROAD AND BRIDGE CONSTRUCTION
SALT LAKE CITY, UTAH

RECOMMENDED FOR APPROVAL — DEPUTY DIRECTOR — JAN.01.2005 DATE

CHAIRMAN STANDARDS COMMITTEE APPROVED — JAN.01.2005 DATE

STANDARD DRAWING TITLE
DELINEATION APPLICATION

STD DWG
GW 10

DGN File: N:\Eng\Standard_Drawings\Imperial\2005Approved\General Road Work (GW)\gw10.dgn
15-DEC-2004

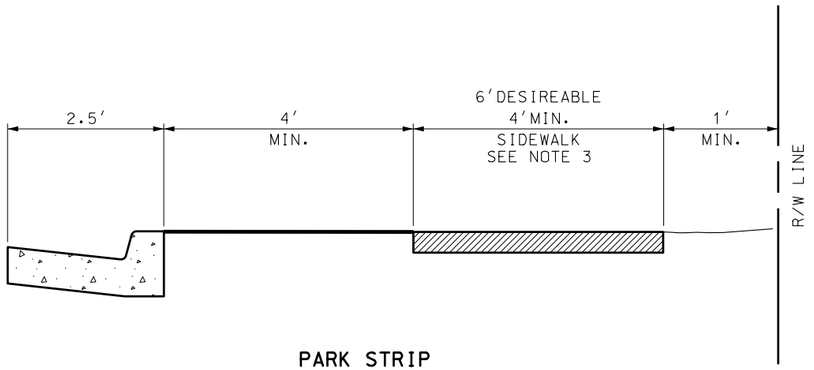

PARK STRIP

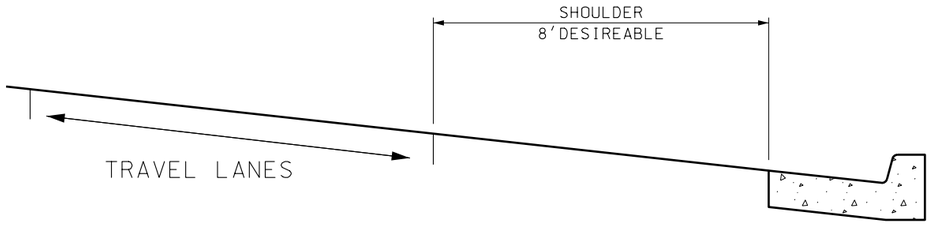

URBAN ROADWAY SHOULDERS

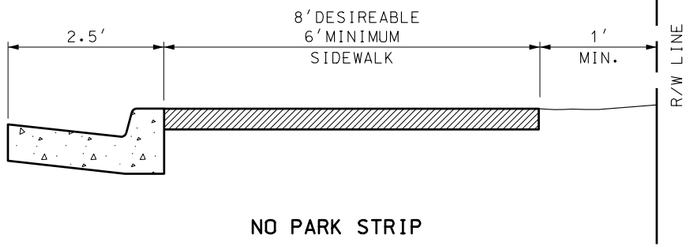

NO PARK STRIP

NOTES:

1. USE CURRENT EDITION OF THE AASHTO A POLICY ON GEOMETRIC DESIGN OF HIGHWAYS AND STREETS FOR DESIGN OF ROADWAY ELEMENTS.
2. USE CURRENT EDITION OF THE AASHTO ROADSIDE DESIGN GUIDE FOR CLEAR ZONE REQUIREMENTS.
3. PROVIDE A 5' x 5' PASSING AREA ON SIDEWALKS OF LESS THAN 5' WHEN THERE IS NOT A HARD SURFACE PASSING AREA OF 5' MINIMUM WIDTH IN A 200' SEGMENT.

REVISIONS

NO.	DATE	APPR.	REMARKS

UTAH DEPARTMENT OF TRANSPORTATION
STANDARD DRAWINGS FOR ROAD AND BRIDGE CONSTRUCTION
SALT LAKE CITY, UTAH

RECOMMENDED FOR APPROVAL — JAN.01.2005 DATE
CHAIRMAN STANDARDS COMMITTEE
APPROVED — JAN.01.2005 DATE
DEPUTY DIRECTOR

SIDEWALKS AND SHOULDER ON URBAN ROADWAYS

STANDARD DRAWING TITLE

STD DWG
GW 11

DGN File:N:\Esd\Standard Drawings\Imperial\2005Approved\General Road Work (GW)gw11.dgn
15-DEC-2004

2005 STANDARD DRAWINGS

END OF DRAWING BOOK PART 4