2005 STANDARD DRAWINGS

Part 6

http://www.udot.utah.gov/index.php/m=c/tid=1091

Change 6, Issued March 2, 2006

Because of file size the 2005 Standard Drawings have been split into six files. The contents of each part are listed below.

Part 1
Index
Sheets 1B and 1C
AT Series Drawings
BA Series Drawings

Part 2
CB Series Drawings
CC Series Drawings
DB Series Drawings

Part 3
DD Series Drawings
DG Series Drawings
EN Series Drawings

Part 4
FG Series Drawings
GF Series Drawings
GW Series Drawings

Part 5
PV Series Drawings
SL Series Drawings
SN Series Drawings

Part 6
ST Series Drawings
SW Series Drawings
TC Series Drawings

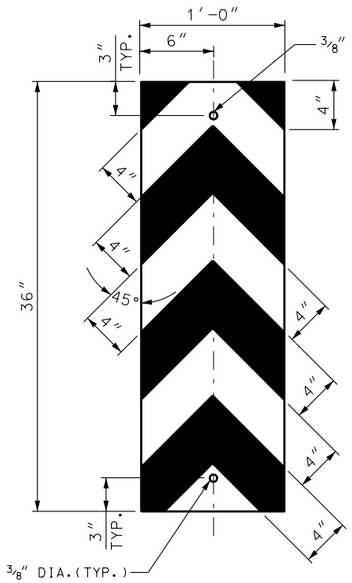

TRAFFIC PASS EITHER SIDE
OM-3C

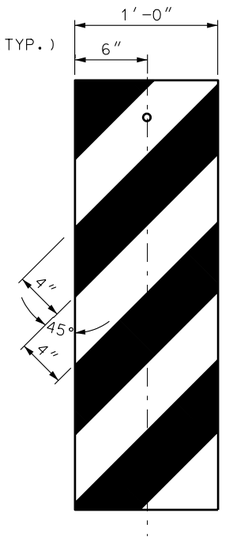

TRAFFIC PASS LEFT
OM-3R

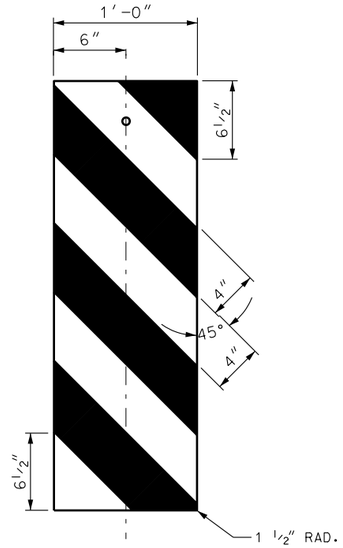

TRAFFIC PASS RIGHT
OM-3L

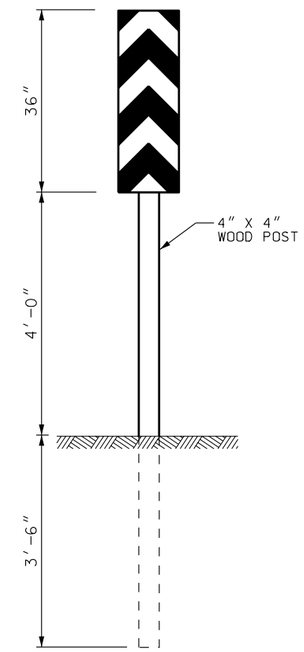

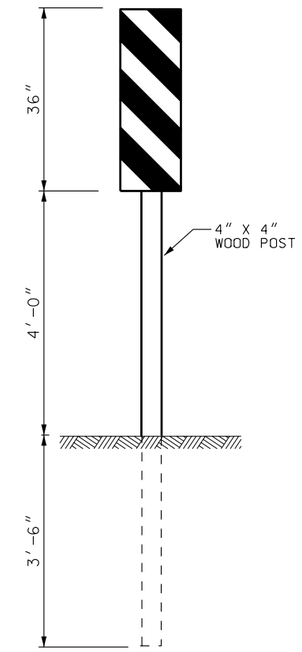

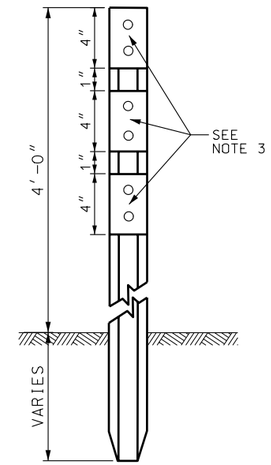

BARRIER MARKER
SEE NOTE 2

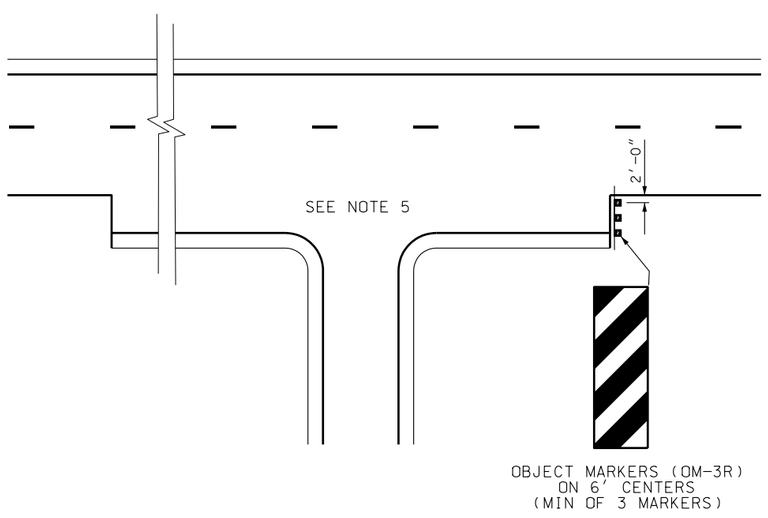

PAVEMENT TRANSITION

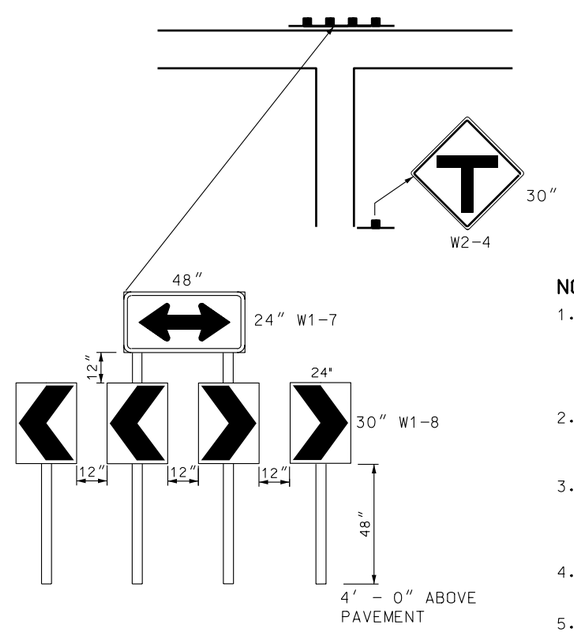

'T' INTERSECTION GUIDANCE

NOTES:

1. USE OM-3C, OM-3R, OR OM-3L TO MARK THE ENDS OF OBSTRUCTIONS SUCH AS NARROW BRIDGES,CULVERTS,ETC. FOR NARROW BRIDGES INSTALL THE MARKER ON EACH SIDE OF BOTH ENDS OF BRIDGE ON TWO-WAY ROADWAYS, AND ON EACH SIDE OF THE APPROACH END OF BRIDGE ON ONE-WAY ROADWAYS.
2. USE BARRIER MARKER TO MARK THE APPROACH TO THE ENDS OF BARRIERS THAT DO NOT HAVE AN ATTENUATOR OR END SECTION INSTALLED.
3. USE REFLECTIVE SHEETING CONFORMING TO SECTION 02891 OF THE UDOT STANDARD SPECIFICATIONS FOR ROAD AND BRIDGE CONSTRUCTION. USE REFLECTIVE YELLOW SHEETING OVER NON-REFLECTIVE BLACK SHEETING.
4. INSTALL THREE YELLOW DELINEATOR PLATES IN ACCORDANCE WITH STD DWG GW 9.
5. ATTACH CHEVRON ALIGNMENT PANELS & OBJECT MARKERS TO POST WITH VANDAL RESISTANT FASTENERS.
6. THE TRAFFIC ENGINEER DETERMINES PAVEMENT MARKINGS AND STRIPING FOR PAVEMENT TRANSITION.

REVISIONS

NO.	DATE	APPR.	REMARKS

UTAH DEPARTMENT OF TRANSPORTATION
STANDARD DRAWINGS FOR ROAD AND BRIDGE CONSTRUCTION
SALT LAKE CITY, UTAH

RECOMMENDED FOR APPROVAL — JAN.01,2005 DATE
CHAIRMAN STANDARDS COMMITTEE APPROVED — JAN.01,2005 DATE
DEPUTY DIRECTOR

OBJECT MARKERS
"T" INTERSECTION AND
PAVEMENT TRANSITION
GUIDANCE

STANDARD DRAWING TITLE

STD DWG
ST 1

DGN File: N:\Esd\Standard_Drawings\Imperial\2005Approved\Striping (ST)\st01.dgn
15-DEC-2004

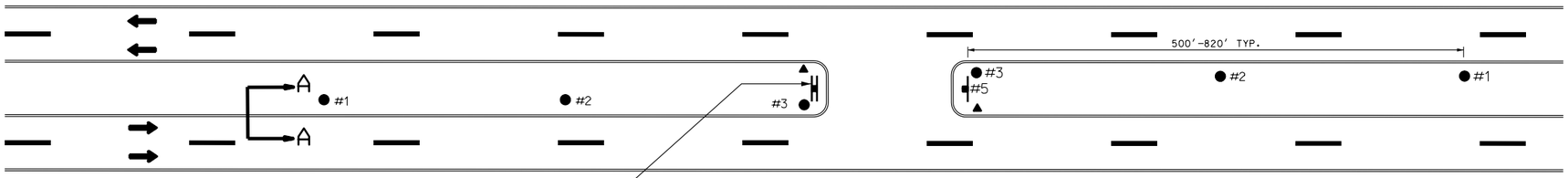

FREEWAY CROSSOVER

LEGEND

● = WHITE FLEXIBLE GUIDE POST

▲ = TYPE II DELINEATOR

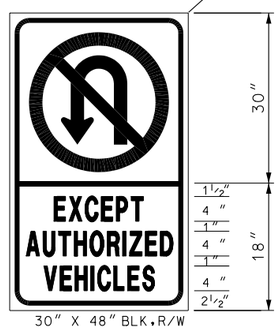

30" X 48" BLK.R/W

SIGN
R3-4

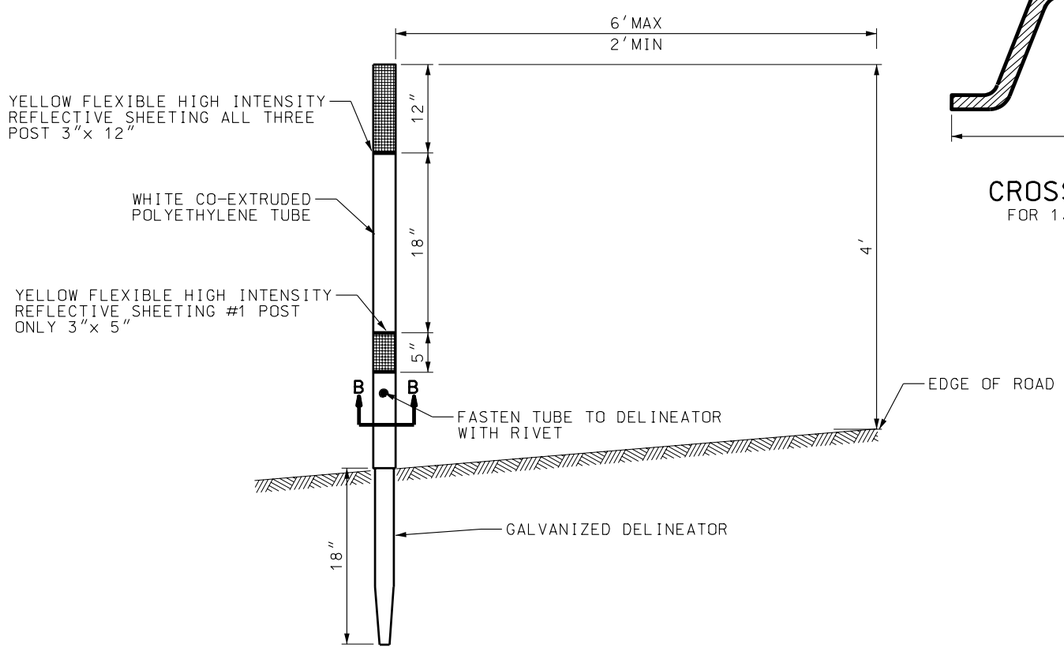

SECTION A-A

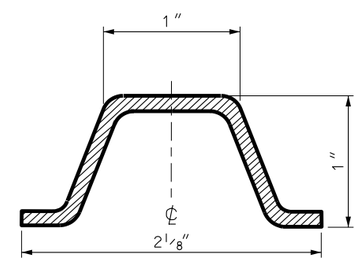

CROSS SECTION
FOR 1.2 LB/FT POST

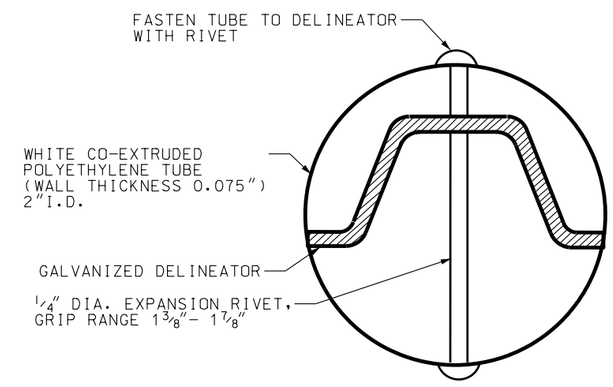

SECTION B-B
SEE NOTES 2,3

NOTES:

1. USE EXISTING DELINEATOR SPACING WHEN POSSIBLE. POST #2 SPACED EVENLY BETWEEN POST #1 & #3 POST #3 PLACE 10 FEET IN ADVANCE OF POINT OF TANGENCY.
2. USE GALVANIZED STEEL POST WITH 5/16" HOLES ON 1" SPACING, FULL LENGTH OF POST. ATTACH WHITE POLYETHYLENE TUBE WITH REFLECTIVE SHEETING AS SHOWN.
3. USE OTHER APPROPRIATE WHITE FLEXIBLE GUIDE POST UPON APPROVAL FROM ENGINEER FOR MAINTENANCE.
4. INSTALL TYPE II DELINEATOR AS SHOWN.
5. USE A SIGN AT EACH END OF CROSSING ADJACENT TO APPROACHING TRAFFIC WHERE THE MEDIAN IS SEPARATED BY MORE THAN 150 FEET.

REVISIONS

NO.	DATE	APPR.	REMARKS

UTAH DEPARTMENT OF TRANSPORTATION
STANDARD DRAWINGS FOR ROAD AND BRIDGE CONSTRUCTION
SALT LAKE CITY, UTAH

RECOMMENDED FOR APPROVAL — JAN.01,2005 DATE
CHAIRMAN STANDARDS COMMITTEE APPROVED — JAN.01,2005 DATE
DEPUTY DIRECTOR

FREEWAY CROSSOVER MARKINGS
STANDARD DRAWING TITLE

STD DWG
ST 2

DGN File:N:\Esd\Standard Drawings\Imperial\2005Approved\Striping (ST)\st02.dgn
15-DEC-2004

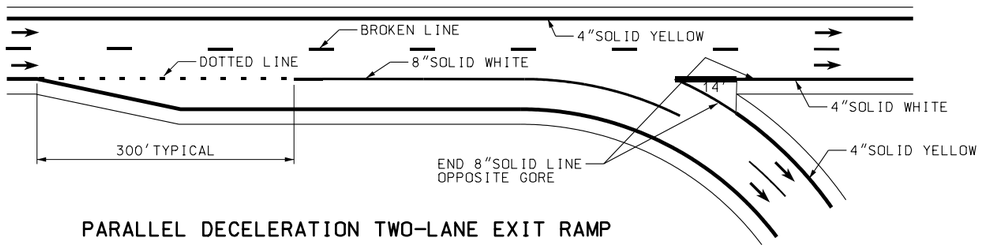

PARALLEL DECELERATION TWO-LANE EXIT RAMP

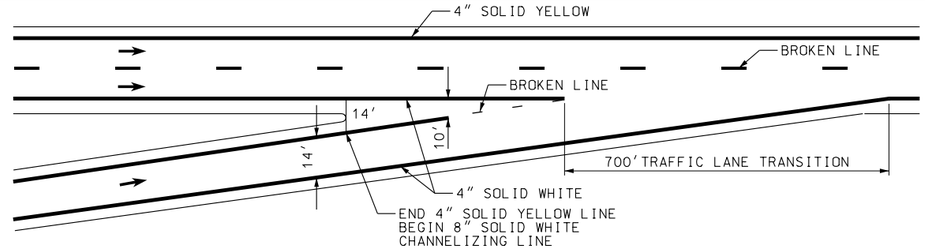

ENTRANCE RAMP

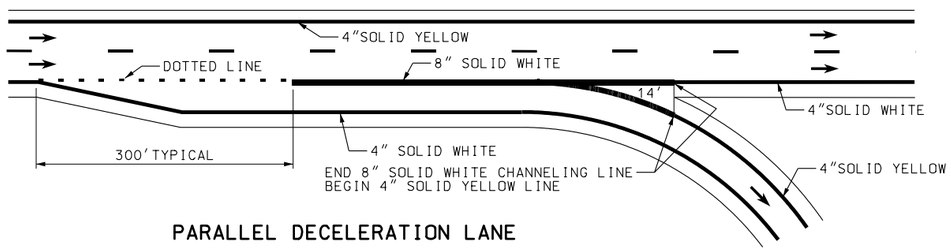

PARALLEL DECELERATION LANE

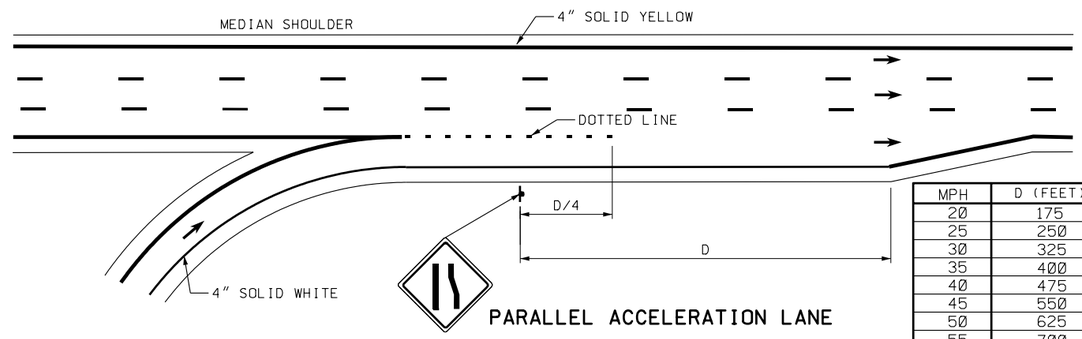

PARALLEL ACCELERATION LANE

MPH	D (FEET)
20	175
25	250
30	325
35	400
40	475
45	550
50	625
55	700
60	775
65	850
70	925
75	1000

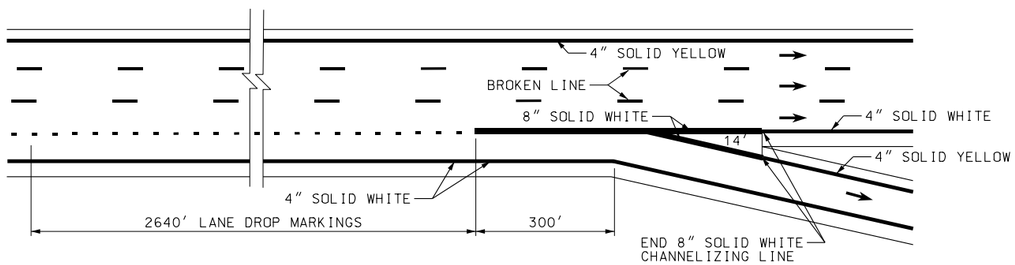

LANE DROP EXIT RAMP

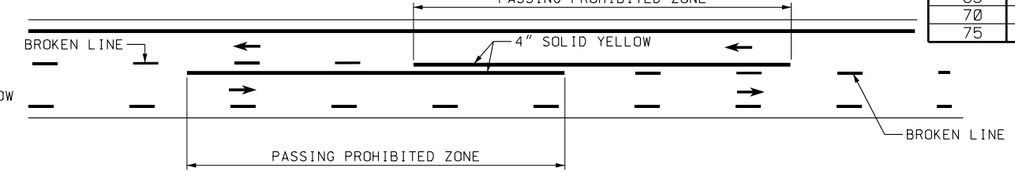

TWO-LANE TWO-WAY

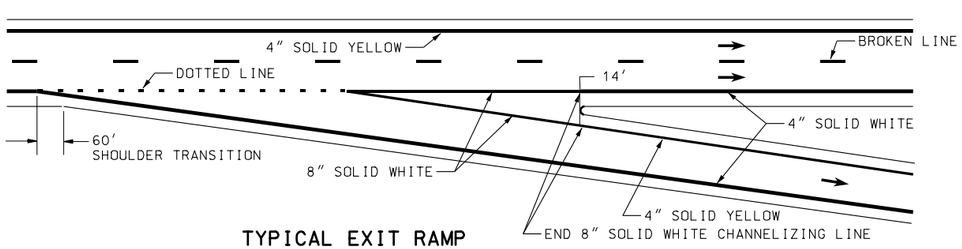

TYPICAL EXIT RAMP

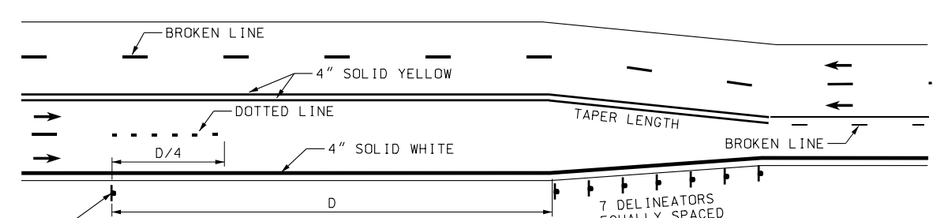

LANE DROP

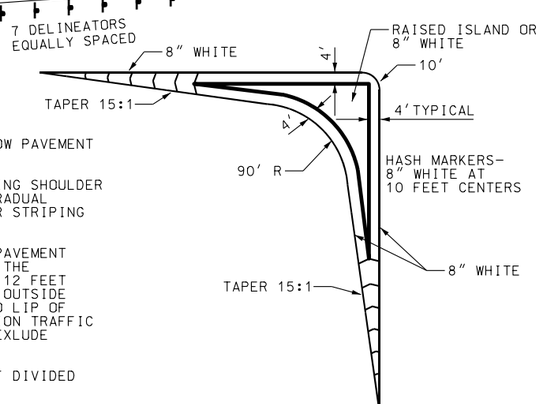

CHANNELIZING ISLAND

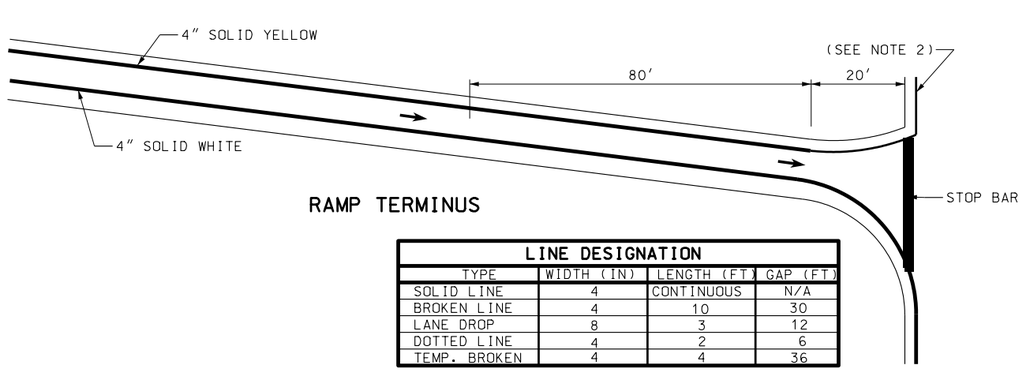

RAMP TERMINUS

LINE DESIGNATION			
TYPE	WIDTH (IN)	LENGTH (FT)	GAP (FT)
SOLID LINE	4	CONTINUOUS	N/A
BROKEN LINE	4	10	30
LANE DROP	8	3	12
DOTTED LINE	4	2	6
TEMP. BROKEN	4	4	36

NOTES:

1. FULLY REFLECTORIZE ALL WHITE AND YELLOW PAVEMENT MARKINGS.
2. TIE RAMP SHOULDER STRIPING INTO EXISTING SHOULDER STRIPING ON THE CROSS STREET WITH A GRADUAL TRANSITION. DISCONTINUE RAMP SHOULDER STRIPING AT THE CROSS STREET EDGE OF PAVEMENT.
3. PAINT A SHOULDER LINE IN AREAS WHERE PAVEMENT EXTENDS TO CURB AND GUTTER, TO DEFINE THE TRAVEL PATH OF A TYPICAL LANE (11 OR 12 FEET WIDE) WHEN THE LATERAL DISTANCE FROM OUTSIDE BROKEN LINE OR PERMISSIVE TURN LANE TO LIP OF GUTTER IS 16 FEET OR GREATER. THE REGION TRAFFIC ENGINEER CAN AUTHORIZE EXCEPTIONS TO EXLUDE SHOULDER LINES IN THESE AREAS.
4. PAINT THE LEFT EDGE OF EACH ROADWAY OF DIVIDED ROADS WITH A YELLOW SHOULDER LINE.
5. GET APPROVAL FOR CHANGES TO EXISTING OR INSTALLATION OF NEW PASS ZONES BY TRAFFIC AND SAFETY DIVISION.
6. CONTACT THE REGION TRAFFIC ENGINEER FOR STRIPING AND PAVEMENT MARKINGS ON MULTI-LANE RAMP TERMINI.

REVISIONS

NO.	DATE	APPR.	REMARKS

UTAH DEPARTMENT OF TRANSPORTATION
STANDARD DRAWINGS FOR ROAD AND BRIDGE CONSTRUCTION
SALT LAKE CITY, UTAH

RECOMMENDED FOR APPROVAL — JAN.01,2005 DATE
CHAIRMAN STANDARDS COMMITTEE APPROVED — JAN.01,2005 DATE
DEPUTY DIRECTOR

TYPICAL PAVEMENT MARKINGS
STANDARD DRAWING TITLE

STD DWG
ST 3

DGN File: N:\Esd\Standard_Drawings\Imperial\2005Approved\Striping (ST)\st03.dgn
15-DEC-2004

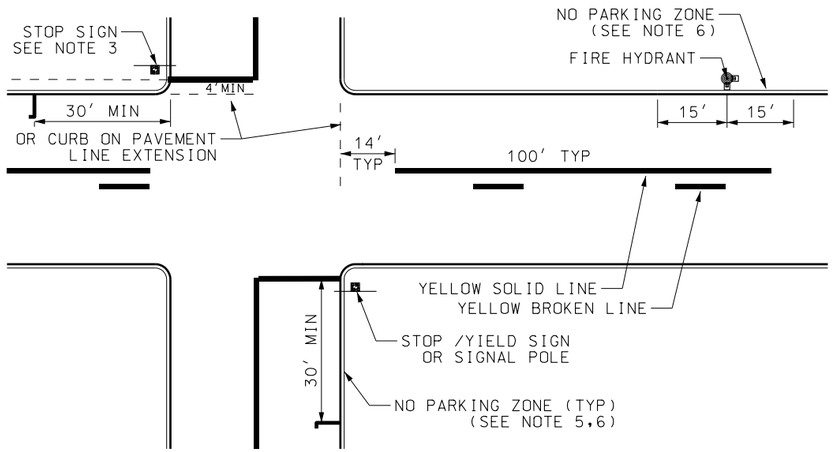

2 LANE ROADWAY

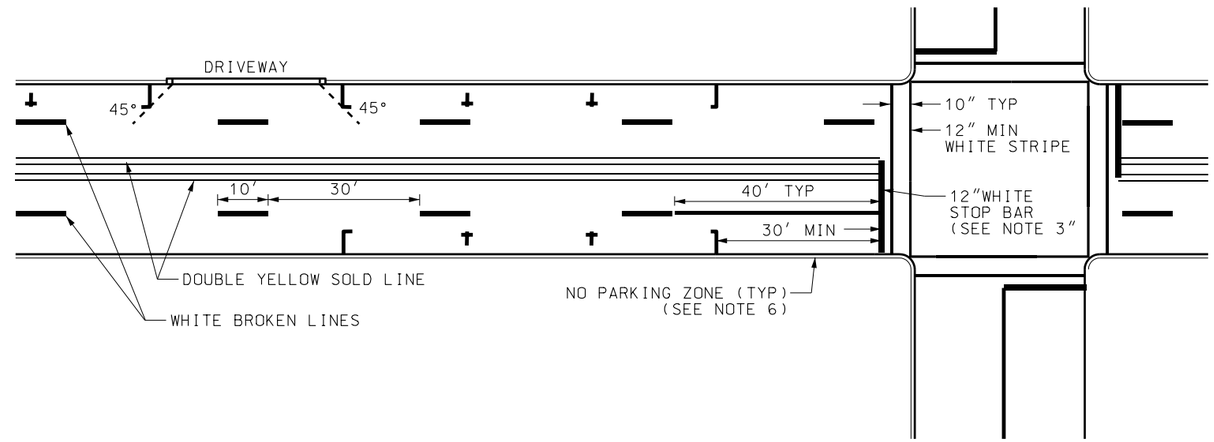

4 LANE ROADWAY

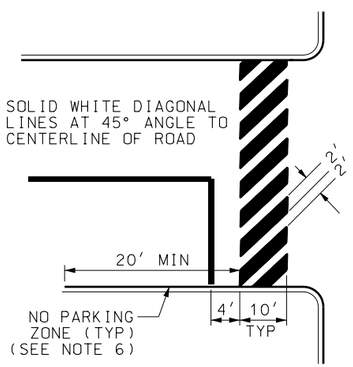

SPECIAL EMPHASIS CROSSWALK
(SEE NOTE 2)

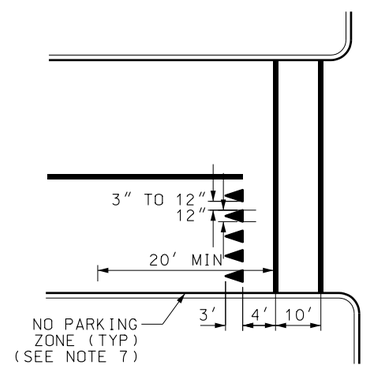

TYPICAL YIELD MARKINGS

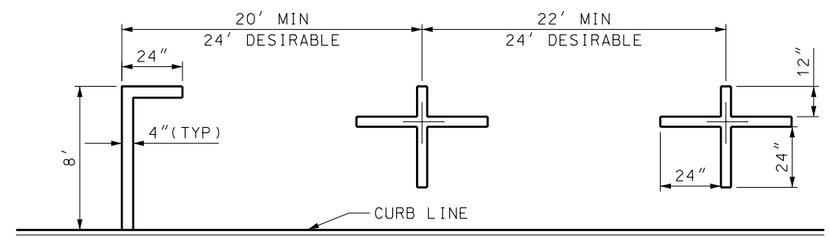

STANDARD PARALLEL PARKING

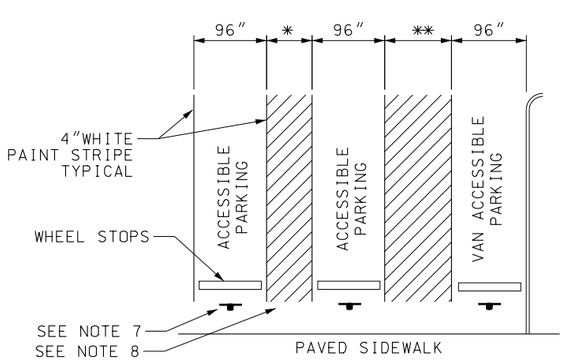

PARKING LOT STRIPING FOR
RESERVED ACCESSIBLE PARKING

* 60" MIN. FOR ACCESSIBLE PARKING
** 96" MIN. FOR VAN ACCESSIBLE PARKING.
PROVIDE ONE VAN ACCESSIBLE STALL FOR
EVERY EIGHT ACCESSIBLE STALLS.

DETAIL B

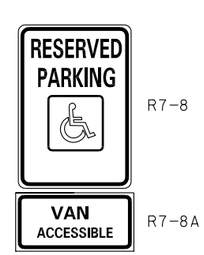

RESERVED ACCESSIBLE
PARKING SIGNING

SEE NOTE 7

NOTES:

1. THE REGION TRAFFIC ENGINEER DETERMINES THE NUMBER AND LOCATIONS OF CROSSWALKS AT AN INTERSECTION.
2. THE REGION TRAFFIC ENGINEER DETERMINES WHEN TO USE THE "SPECIAL EMPHASIS" CROSSWALK.
3. PLACE THE STOP OR YIELD LINE AT DESIRED STOPPING POINT WHEN THERE IS NOT A CROSSWALK.
4. USE A WIDER STOP OR YIELD LINE ONLY WHEN APPROVED BY THE REGION TRAFFIC ENGINEER.
5. ESTABLISH A "NO PARKING" ZONE 30' PRIOR TO FLASHING SIGNAL, STOP SIGN, YELD SIGN, OR TRAFFIC CONTROL SIGNAL PLACED ON THE SIDE OF ROADWAY.
6. RED CURB MARKING IS OPTIONAL FOR "NO PARKING" ZONE.
7. PROVIDE RESERVED PARKING SIGNING (R7-8) FOR ACCESSIBLE PARKING SPACES. INCLUDE "VAN ACCESSIBLE" PLAQUE (R7-8A) FOR VAN PARKING SPACES.
8. BLEND ACCESS AISLE WITH PAVED SIDEWALK OR PEDESTRIAN RAMP FOR SMOOTH ELEVATION TRANSITION.
9. MARKINGS SHOWN ARE TYPICAL FOR STOP OR SIGNAL CONTROL. USE SIMILAR DISTANCES AND APPROPRIATE MARKINGS FOR YIELD CONTROL.

REVISIONS			
NO.	DATE	APPR.	REMARKS

UTAH DEPARTMENT OF TRANSPORTATION
STANDARD DRAWINGS FOR ROAD AND BRIDGE CONSTRUCTION

RECOMMENDED FOR APPROVAL — JAN.01,2005 DATE
CHAIRMAN STANDARDS COMMITTEE — JAN.01,2005 DATE
APPROVED
DEPUTY DIRECTOR

CROSSWALKS, PARKING
AND INTERSECTION
APPROACHES

STANDARD DRAWING TITLE

STD DWG
ST 4

DGN File:N:\Esd\Standard\Drawings\Imperial\2005Approved\Striping (ST)\st04.dgn
15-DEC-2004

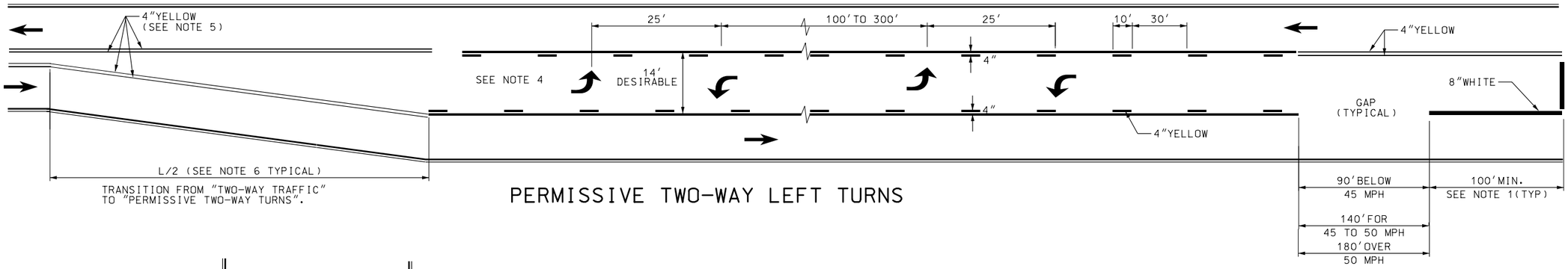

PERMISSIVE TWO-WAY LEFT TURNS

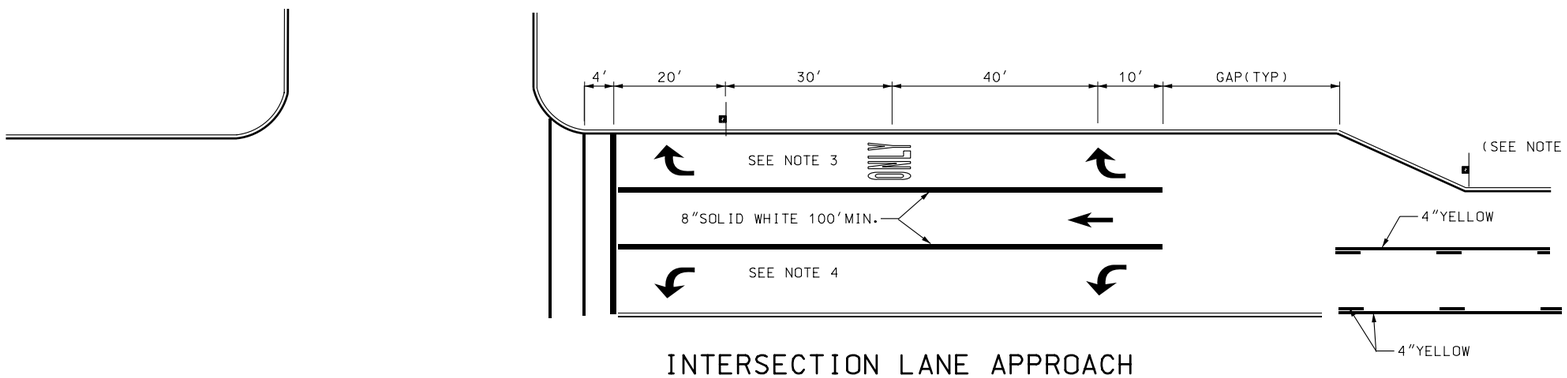

INTERSECTION LANE APPROACH

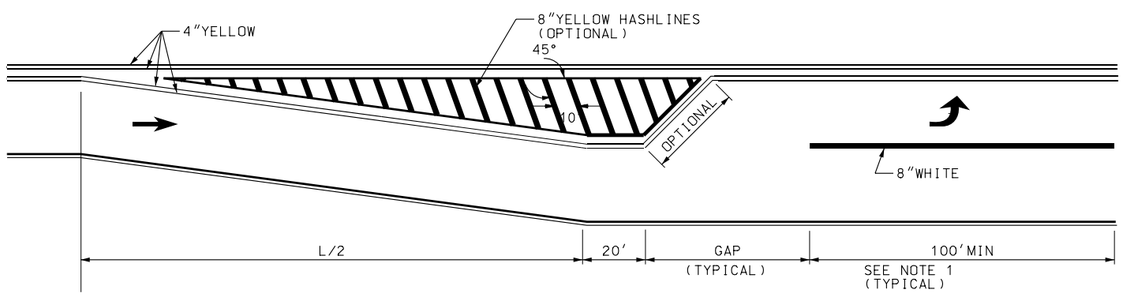

PAINTED LEFT TURN LANE

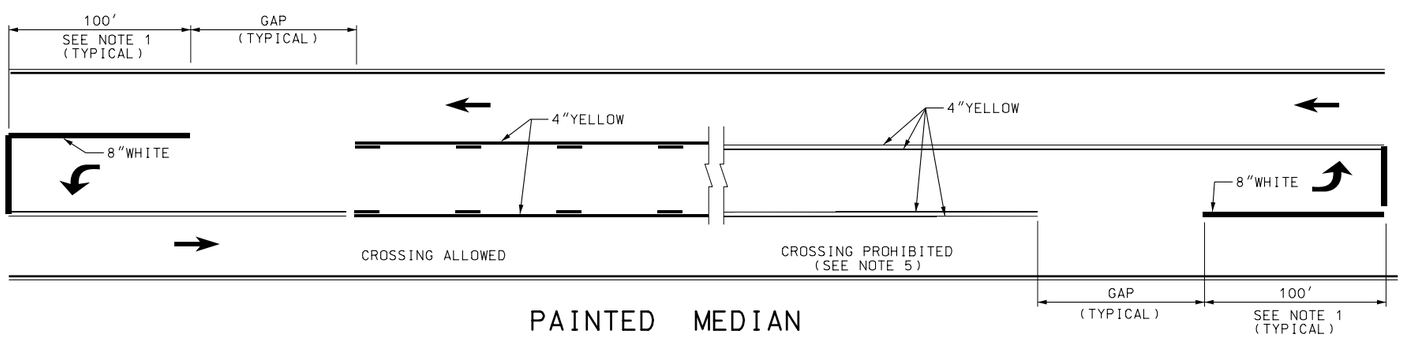

PAINTED MEDIAN

NOTES:

1. USE A CAPACITY ANALYSIS TO DETERMINE THE LENGTH OF STORAGE REQUIRED FOR TURN LANE. A MINIMUM LENGTH OF 100 FEET IS REQUIRED.
2. USE THE STANDARD ALPHABET FOR HIGHWAY SIGNS AND PAVEMENT MARKINGS FOR PAVEMENT MESSAGES.
3. USE PAVEMENT MARKINGS CONSISTING OF ARROWS, THE WORD "ONLY" IN LANE, AND THE STANDARD SIGN R3-7R WHEN THE LANE IS A MANDATORY MOVEMENT.
4. PAVEMENT MARKINGS ARE OPTIONAL FOR MANDATORY LEFT TURN LANES AND TWO-WAY LEFT TURN LANES.
5. CREATE A CROSSING PROHIBITED ISLAND OR MEDIAN BY PLACING TWO DOUBLE YELLOW LINES FOR EACH DIRECTION (4 SOLID YELLOW LINES TOTAL)
6. TAPER FORMULA: $L = SW$ FOR SPEEDS OF 45 MPH OR GREATER
   $L = WS^2/60$ FOR SPEEDS OF 40 MPH OR LESS.
7. FOR RAISED MEDIAN AND PLOWABLE END SECTION DETAILS SEE STD DWG GW 1

REVISIONS

NO.	DATE	APPR.	REMARKS
1	02/24/05	B.A.	NOTE REFERENCE CORRECTED IN UPPER LEFT DETAIL.
2	02/23/06	B.A.	CORRECTED TYPO IN NOTE 6.

UTAH DEPARTMENT OF TRANSPORTATION
STANDARD DRAWINGS FOR ROAD AND BRIDGE CONSTRUCTION
SALT LAKE CITY, UTAH

RECOMMENDED FOR APPROVAL — FEB.23,2006 DATE
CHAIRMAN STANDARDS COMMITTEE APPROVED — FEB.23,2006 DATE
DEPUTY DIRECTOR

PAINTED MEDIAN AND AUXILIARY LANE DETAILS
STANDARD DRAWING TITLE

STD DWG
ST 5

DGN Files:L:\Standard Drawings\Imperial\2005Approved\ChangesApproved\st05.dgn
01-MAR-2006

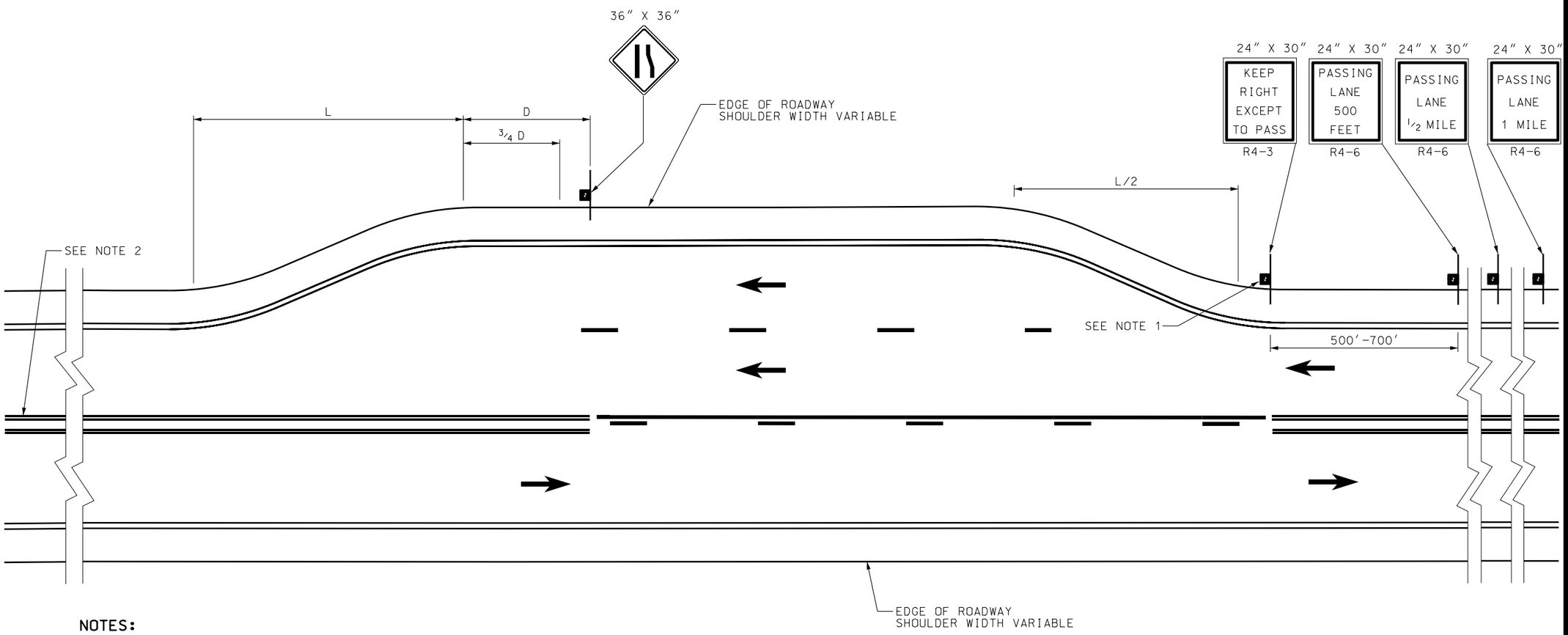

NOTES:

1. REPEAT THE R4-3 SIGN AT 1 MILE INTERVALS WHEN PASSING LANE EXCEEDS 2 MILES IN LENGTH.
2. PERMIT DOWN GRADE PASSING, PROVIDED PASSING ZONE CRITERIA IS MET. PLACE "NO PASSING" MARKINGS THROUGH AND BEYOND THE TRANSITION AREA UNTIL ADEQUATE SIGN DISTANCE IS MET.
3. USE TABLE II FOR DISTANCE "D".
4. USE THE FOLLOWING FORMULAS TO DETERMINE "L":

   L= S x W OR TABLE 1

   FOR SPEEDS LESS THAN 45 MPH

   $$L = \frac{WS^2}{60} \text{ OR TABLE II}$$

   L = LENGTH IN FEET
   S = SPEED LIMIT
   W = OFFSET IN FEET

TABLE I

SPEED MPH	AVERAGE RUNNING SPEED MPH	MIN. TRUCK SPEED MPH	"L" TRANSITION LENGTH (feet)	L/2 TRANSITION LENGTH (feet)
30	28	13	180	90
40	36	21	320	160
45	40	25	540	270
50	44	29	600	300
55	48	30	660	330
60	52	30	720	360
65	55	30	780	390
70	58	30	840	420

TABLE II

MPH	D (feet)
20	175
25	250
30	325
35	400
40	475
45	550
50	625
55	700
60	775
65	850

REVISIONS

NO.	DATE	APPR.	REMARKS

UTAH DEPARTMENT OF TRANSPORTATION
STANDARD DRAWINGS FOR ROAD AND BRIDGE CONSTRUCTION
SALT LAKE CITY, UTAH

RECOMMENDED FOR APPROVAL — JAN.01,2005 DATE
CHAIRMAN STANDARDS COMMITTEE APPROVED — JAN.01,2005 DATE
DEPUTY DIRECTOR

PASSING/CLIMBING LANES TRAFFIC CONTROL

STANDARD DRAWING TITLE

STD DWG
ST 6

DGN File:N:\Esd\Standard_Drawings\Imperial\2005Approved\Signing (ST)\st06.dgn
15-DEC-2004

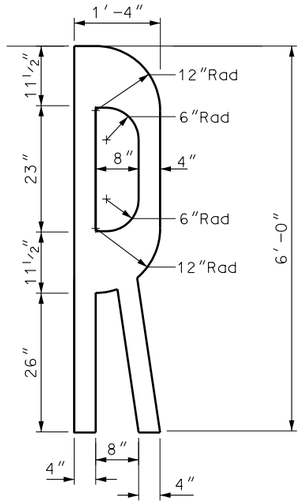

SPACING TABLE

SPEED LIMIT MPH	MIN. DISTANCE (feet)
65 - 70	750
55 - 60	550
45 - 50	375
35 - 40	225
25 - 30	100

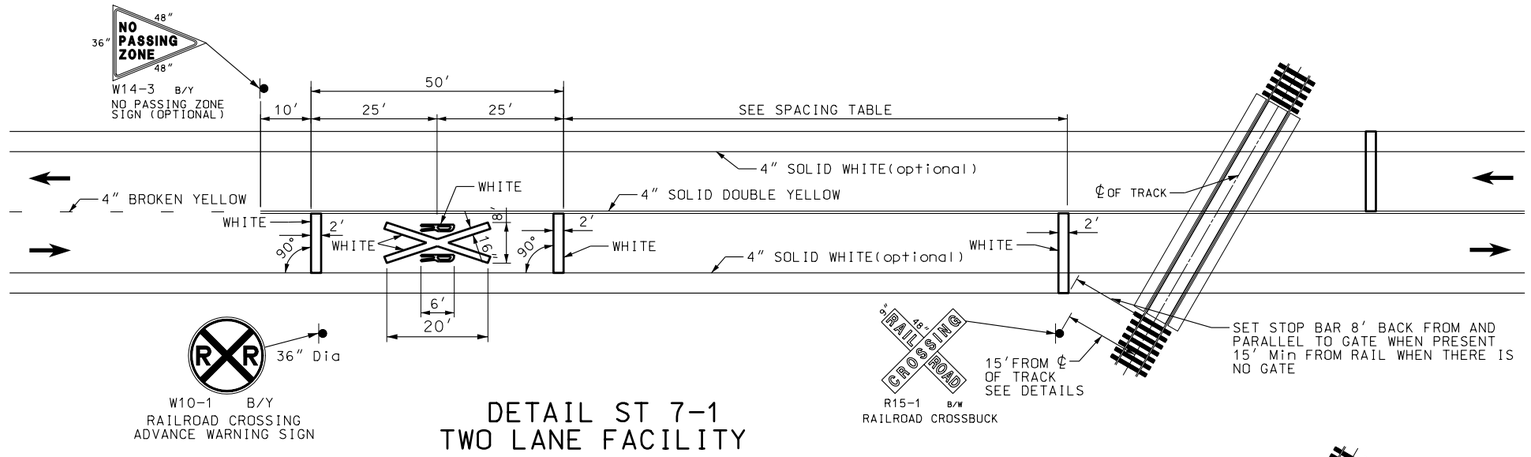

DETAIL ST 7-1
TWO LANE FACILITY

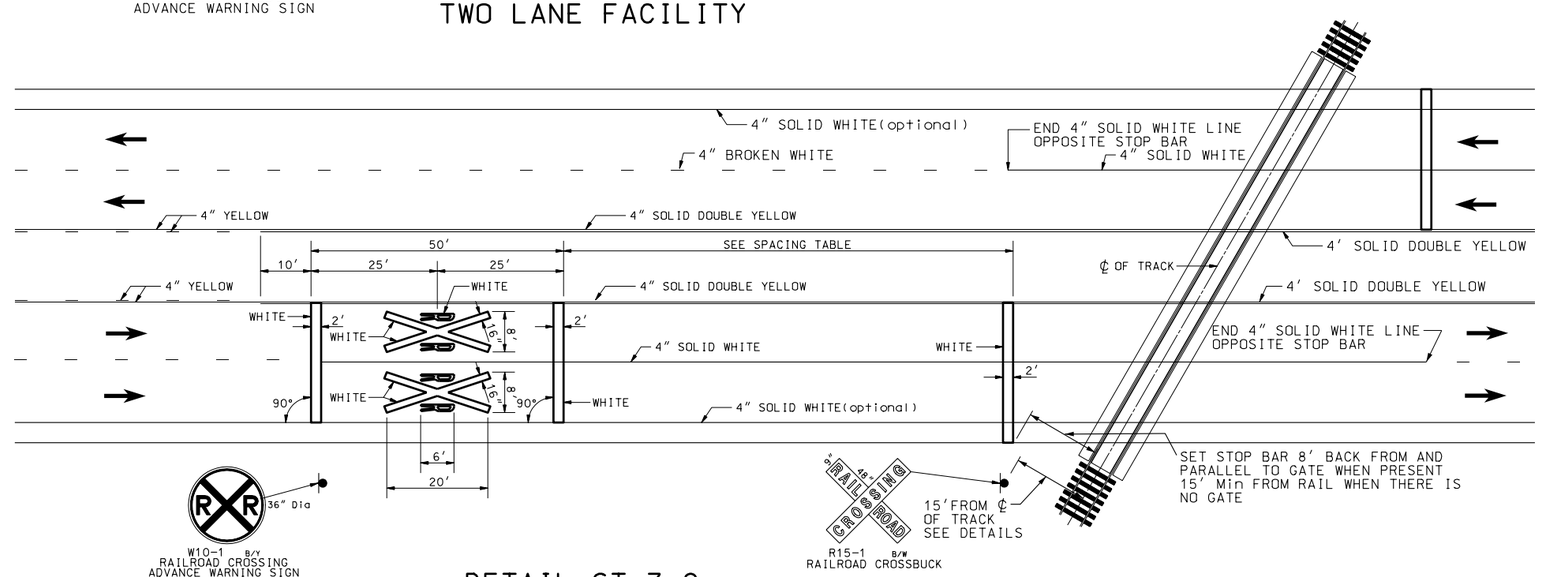

DETAIL ST 7-2
MULTI LANE FACILITY

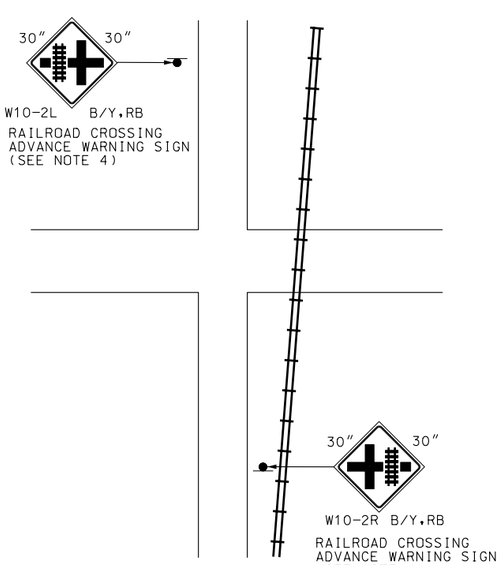

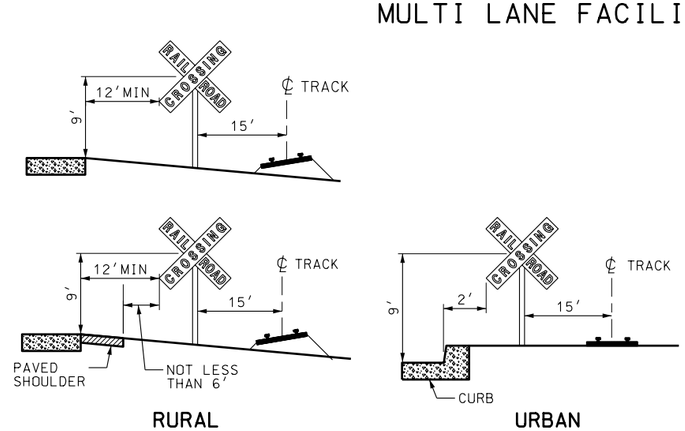

RURAL

URBAN

DETAILS

NOTES:

1. PLACE PAVEMENT MARKINGS, CONSISTING OF AN "RXR", TRANSVERSE LINES, AND NO-PASSING MARKINGS. USE MARKINGS IN EACH APPROACH LANE ON ALL PAVED APPROACHES TO GRADE CROSSING WHERE GRADE CROSSING SIGNALS OR AUTOMATIC GATES ARE PRESENT AND AT ALL OTHER GRADE CROSSINGS WHERE THE SPEED IS 40 MPH OR GREATER. PLACE PAVEMENT MARKINGS AT OTHER CROSSINGS AS DIRECTED BY THE REGION TRAFFIC ENGINEER.
2. EXTEND TRANSVERSE LINES ACROSS ALL APPROACH LANES ON MULTI-LANE ROADS. USE INDIVIDUAL "RXR" MARKINGS IN EACH APPROACH LANE.
3. USE AN ADDITIONAL W10-1 ON CROSS STREET WHEN AN INTERSECTION IS LOCATED BETWEEN THE W10-1 AND THE GRADE CROSSING.
4. USE W10-2 SIGN WHERE THERE IS NOT A W10-1 SIGN BETWEEN THE INTERSECTION AND GRADE CROSSING.
5. USE STANDARD ALPHABET FOR HIGHWAY SIGN AND PAVEMENT MARKINGS FOR DIMENSIONS OF RAILROAD PAVEMENT MARKINGS.

NO.	DATE	APPR.	REMARKS

REVISIONS

UTAH DEPARTMENT OF TRANSPORTATION
STANDARD DRAWINGS FOR ROAD AND BRIDGE CONSTRUCTION
SALT LAKE CITY, UTAH

RECOMMENDED FOR APPROVAL — JAN.01,2005 DATE
CHAIRMAN STANDARDS COMMITTEE APPROVED — JAN.01,2005 DATE
DEPUTY DIRECTOR

PAVEMENT MARKINGS AND SIGNS AT RAILROAD CROSSING
STANDARD DRAWING TITLE

STD DWG
ST 7

DGN File:N:\Eas\Standard Drawings\Imperial\2005approved\Striping (ST)\st07.dgn
15-DEC-2004

NOTES:

1. PLACE A MINIMUM OF 10 PLOWABLE PAVEMENT MARKERS AT 20′ CENTERS IN EACH SIDE OF GORE FROM BEGINNING OF GORE. (MINIMUM TOTAL = 20 MARKERS)
2. CLEAR MARKERS SUPPLEMENT WHITE PAINT LINES. YELLOW MARKERS SUPPLEMENT YELLOW PAINT LINES.
3. THE REGION TRAFFIC ENGINEER WILL APPROVE ALL OTHER LOCATIONS.

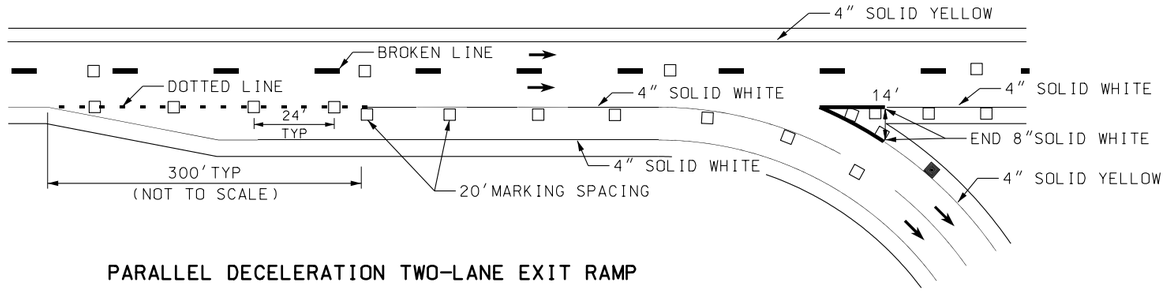

PARALLEL DECELERATION TWO-LANE EXIT RAMP

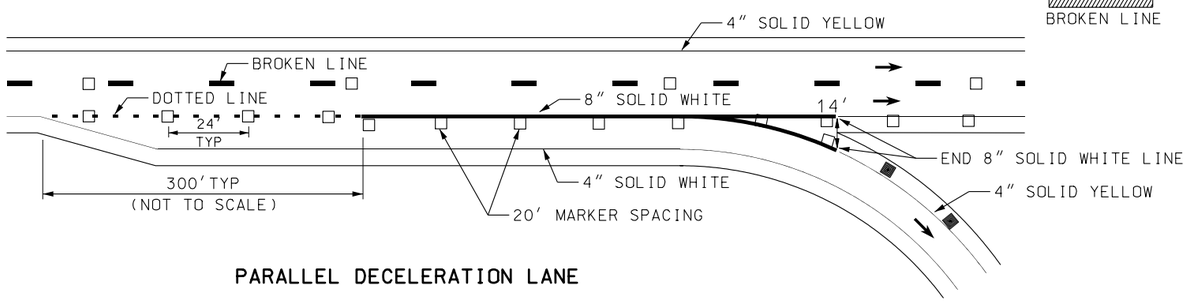

PARALLEL DECELERATION LANE

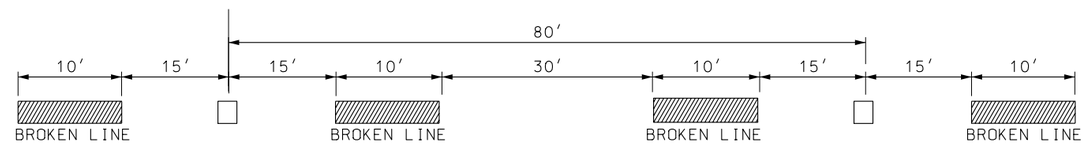

80′ MARKER SPACING BETWEEEN BROKEN LINES
ON TANGENT AND FOR R ℄ 1900′

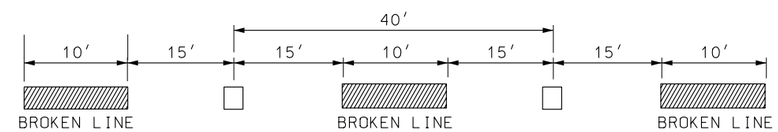

40′ MARKER SPACING BETWEEEN BROKEN LINES
FOR 1900′ ℄ R ℄ 400′

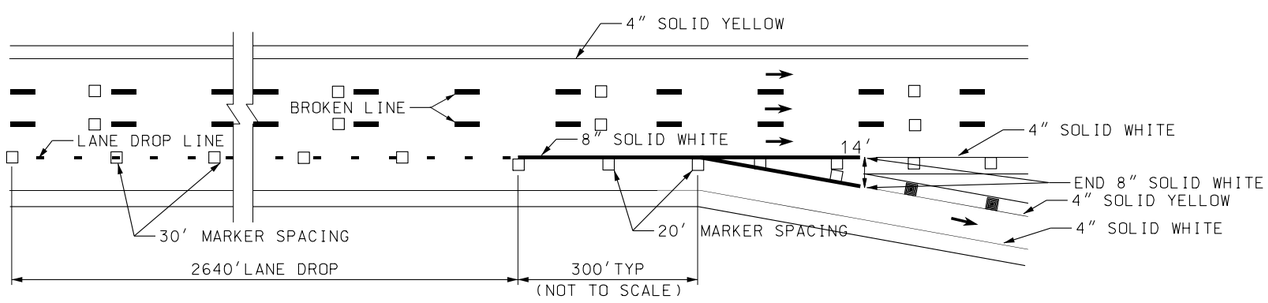

LANE DROP EXIT RAMP

FOR R <400′
20′ MARKER SPACING BETWEEEN BROKEN LINES

DETAIL "A"

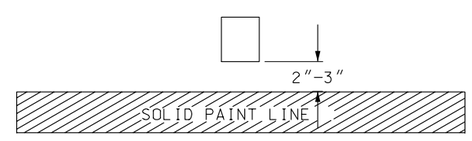

DETAIL "B"
MARKER SUPPLEMENTING SOLID PAINT LINE

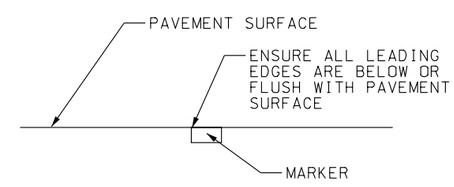

DETAIL "C"
MARKER IN PAVEMENT SURFACE

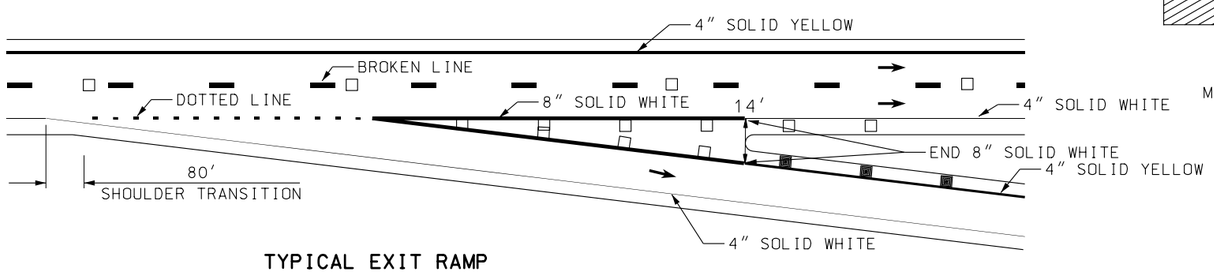

TYPICAL EXIT RAMP

LEGEND

- □ = CLEAR ONE WAY MARKER
- ■ = YELLOW ONE WAY MARKER
- R = RADIUS OF CURVE

NO.	DATE	APPR.	REMARKS

REVISIONS

UTAH DEPARTMENT OF TRANSPORTATION
STANDARD DRAWINGS FOR ROAD AND BRIDGE CONSTRUCTION
SALT LAKE CITY, UTAH

RECOMMENDED FOR APPROVAL — JAN.01.2005 DATE
CHAIRMAN STANDARDS COMMITTEE
APPROVED — JAN.01.2005 DATE
DEPUTY DIRECTOR

PLOWABLE PAVEMENT MARKERS
STANDARD DRAWING TITLE

STD DWG
ST 8

DGN File:N:\Esd\Standard_Drawings\Imperial\2005Approved\Striping (ST)\st08.dgn
15-DEC-2004

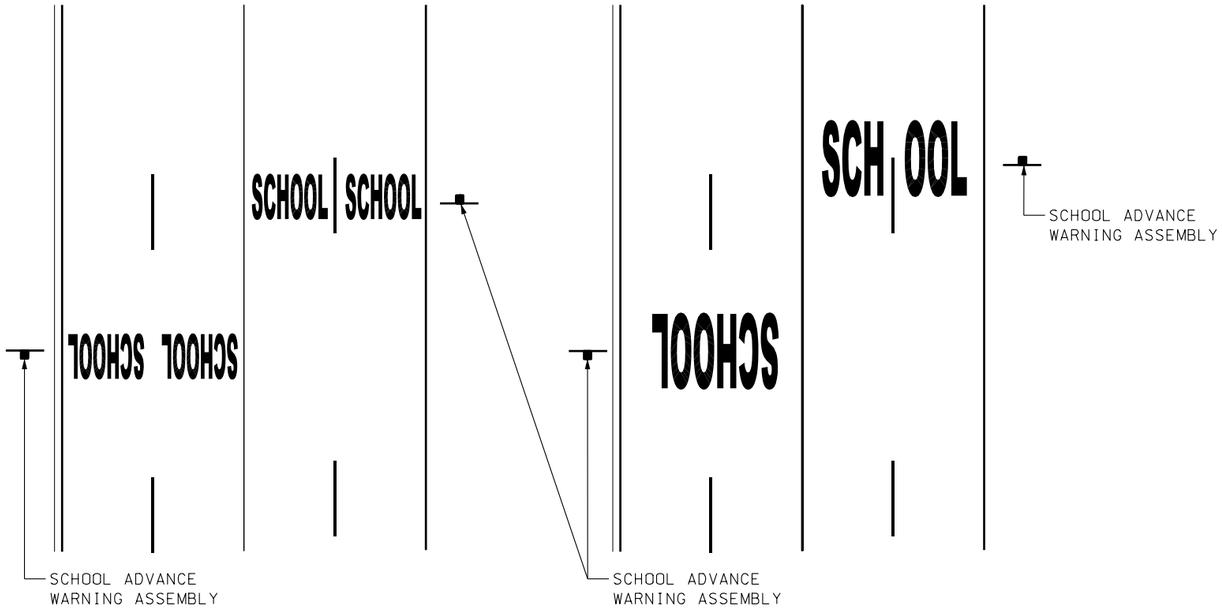

STANDARD

ONE MESSAGE PER LANE
ANY NUMBER OF LANES

OPTION

ONE MESSAGE PER TWO LANES
EVEN NUMBER OF LANES ONLY

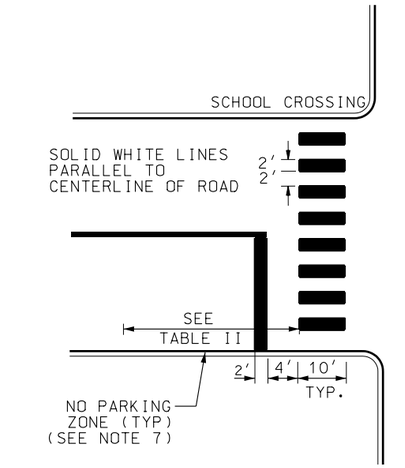

STOP OR SIGNAL CONTROL

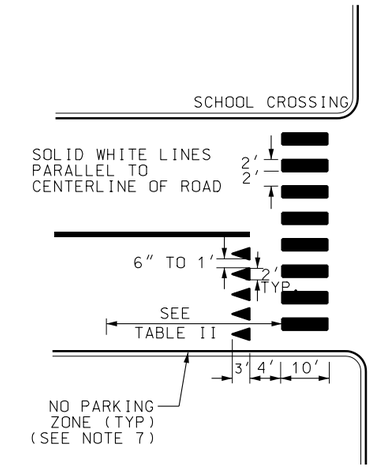

YIELD CONTROL

TABLE II	
NO PARKING ZONE	
SPEED MPH	LENGTH FT
25	60
30	85
35	115
40	150
45	190
50	230

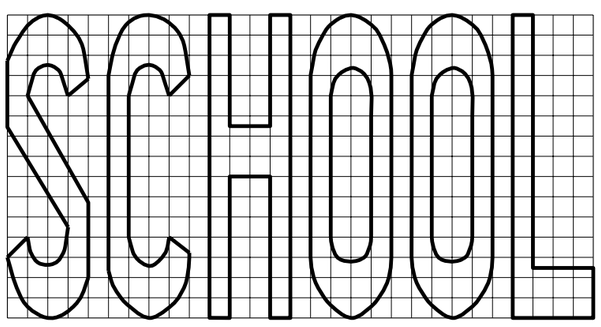

TABLE I			
RECOMMENDED LETTER SIZES			
ONE-LANE MESSAGE			
LANE WIDTH	LETTER WIDTH INCHES	SPACE WIDTH INCHES	MINIMUM LETTER HEIGHT FEET
12'	18	5	6
11'6"	17 1/4	4 1/2	6
11'	16 1/2	4 1/4	6
10'6"	15 3/4	4	6
10'	15	3 3/4	6
TWO-LANE MESSAGE			
ALL	32	8	10

NOTES:

1. PLACE ALL SCHOOL MESSAGES, PAVEMENT MARKINGS, AND SIGNING IN CONFORMANCE WITH THE PART 7 SUPPLEMENT TO THE MUTCD, TRAFFIC CONTROLS FOR SCHOOL ZONES, CURRENT EDITION.
2. PLACE SCHOOL MESSAGE OPPOSITE SCHOOL ADVANCE WARNING ASSEMBLY.
3. SINGLE LANE MESSAGES (STANDARD)

   MAXIMUM MESSAGE WIDTH NOT TO EXCEED LANE WIDTH LESS 10 INCHES (FOR EXAMPLE, 12 FEET TRAFFIC LANE WIDTH LESS 10 INCHES EQUALS 11 FEET 2 INCHES MAXIMUM MESSAGE WIDTH).

   MESSAGE TO BE WHOLLY CONTAINED WITHIN TRAFFIC LANE, AND NOT ENCROACH UPON LANE STRIPING OR OTHER PAVEMENT MARKINGS.
4. TWO LANE MESSAGES (OPTIONAL)

   USE TWO-LANE MESSAGE ONLY WHEN THERE ARE AN EVEN NUMBER OF LANES.

   USE TWO-LANE MESSAGE UPON APPROVAL OF THE REGION TRAFFIC ENGINEER.

   ONE-HALF OF MESSAGE TO BE CONTAINED IN EACH TRAFFIC LANE. WHEN A LANE MARKING IS LOCATED WITHIN THE SCHOOL MESSAGE, PLACE SUFFICIENT DISTANCE BETWEEN THE "H" AND THE "O" SO AS TO PROVIDE A MINIMUM OF 5 INCHES FROM THE CENTER OF THE MARKING TO THE EDGE OF EACH LEGEND.
5. USE 24 INCH STOP LINE, AND A 24 INCH x 36 INCH YIELD LINE.
6. ESTABLISH A "NO PARKING" ZONE PRIOR TO SCHOOL CROSSING.
7. RED CURB MARKING IS OPTIONAL FOR "NO PARKING" ZONE.

NO.	DATE	APPR.	REMARKS

REVISIONS

UTAH DEPARTMENT OF TRANSPORTATION
STANDARD DRAWINGS FOR ROAD AND BRIDGE CONSTRUCTION
SALT LAKE CITY, UTAH

RECOMMENDED FOR APPROVAL — JAN.01,2005 DATE
CHAIRMAN STANDARDS COMMITTEE APPROVED — JAN.01,2005 DATE
DEPUTY DIRECTOR

SCHOOL CROSSING AND SCHOOL MESSAGE
STANDARD DRAWING TITLE

STD DWG
ST 9

DGN File:N:\Est\Standard_Drawings\Imperial\2005Approved\Signing (ST)\st09.dgn
15-DEC-2004

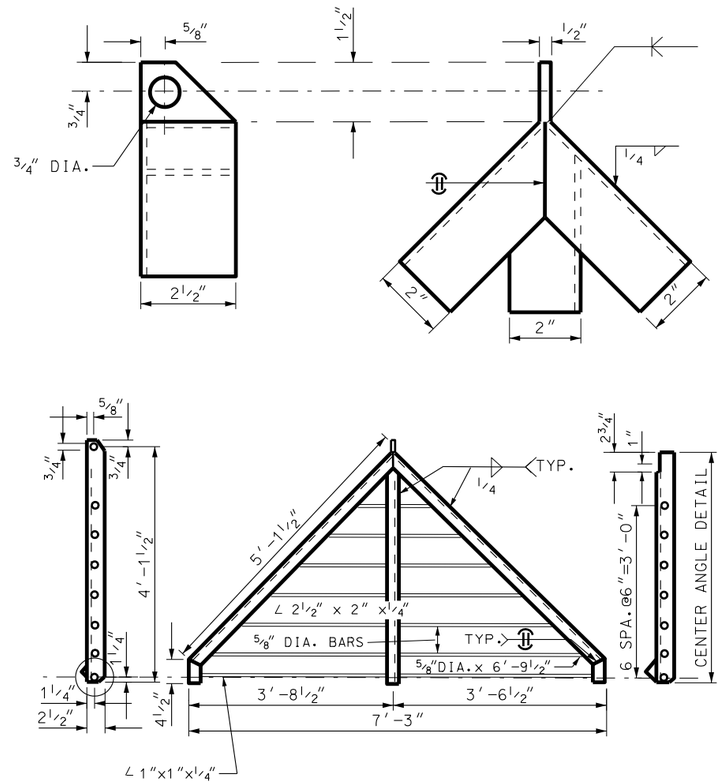

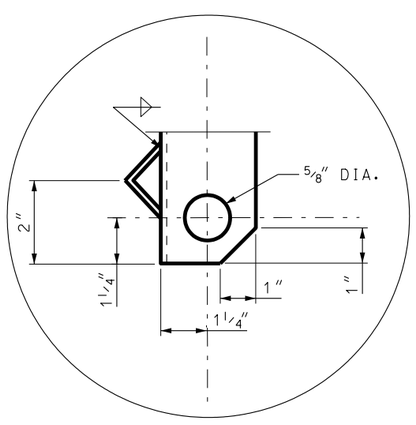

WELDED END GUARD UNIT
WT.W/BOLTS, U-CLAMP AND
PIPE POST 115 LBS
(2 REQUIRED)

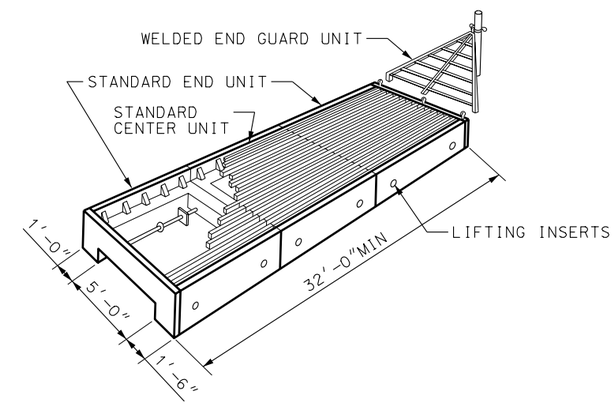

NOTES:

1. USE COATED DEFORMED-BILLET REINFORCING STEEL BARS CONFORMING TO AASHTO M 284 OR M 111 AND M 31 GRADE 60.
2. USE STRUCTURAL STEEL CONFORMING TO AASHTO M 270 GRADE 36 AND GALVANIZE AFTER FABRICATION IN ACCORDANCE WITH AASHTO M 111 (ASTM A 123)
3. SUB-EXCAVATE SOIL 2'-0" AND BACKFILL WITH GRANULAR BACKFILL BORROW AND COMPACT.
4. ANY MODIFICATION REQIRES APPROVAL.
5. USE CONCRETE CLASS AA(AE)

DESIGN DATA

HS-20 LOADING IN ACCORDANCE WITH AASHTO STANDARD SPECIFICATION
fc= 1400 psi
fs= 2,400 psi (REINFORCING STEEL)
fs= 20,000 psi (STRUCTURAL STEEL)
n=8

REVISIONS

NO.	DATE	APPR.	REMARKS

UTAH DEPARTMENT OF TRANSPORTATION
STANDARD DRAWINGS FOR ROAD AND BRIDGE CONSTRUCTION
SALT LAKE CITY, UTAH

RECOMMENDED FOR APPROVAL — JAN.01,2005 DATE
CHAIRMAN STANDARDS COMMITTEE
APPROVED — JAN.01,2005 DATE
DEPUTY DIRECTOR

WELDED END GUARD UNIT
STANDARD DRAWING TITLE

STD DWG
SW 1A

DGN File:N:\Esd\Standard_Drawings\Imperial\2005Approved\Structures and Walls (SW)\sw01a.dgn
15-DEC-2004

NOTE:
TOP OF THE CATTLE GUARD PARALLEL TO THE HIGWAY PROFILE GRADE.
ROTATE UNITS TO ACCOMPLISH THIS IF REQ'D.

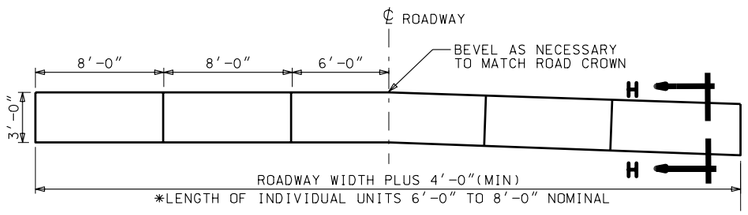

TYPICAL CATTLE GUARD INSTALLATION

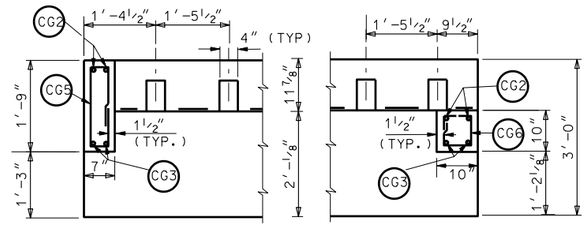

SECTION B-B SECTION C-C

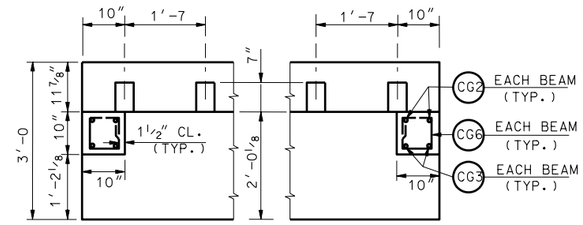

SECTION D-D

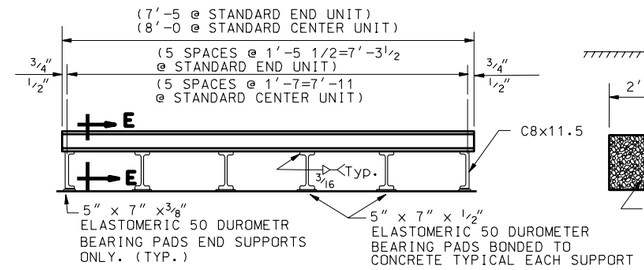

TRAFFIC GRILL UNIT

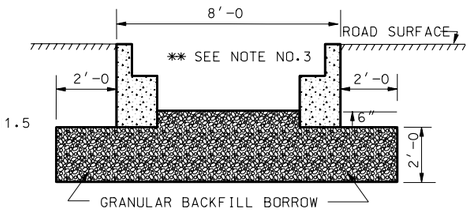

SECTION H-H

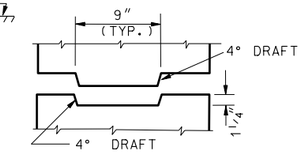

SECTION F-F

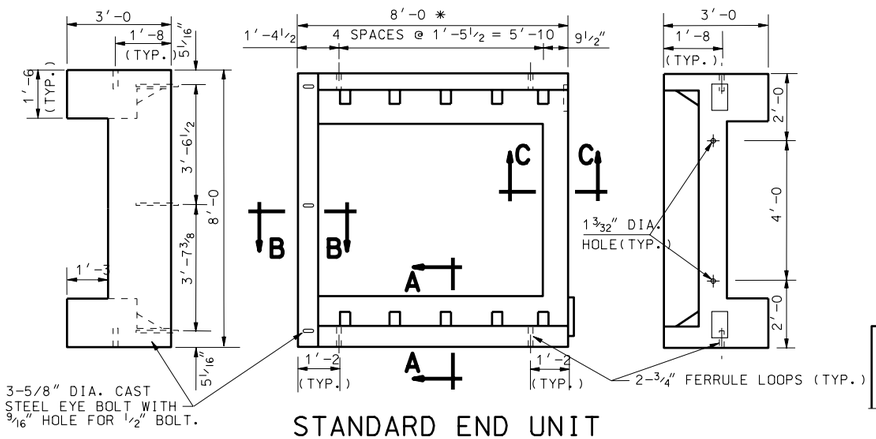

STANDARD END UNIT
(LEFT SIDE SHOWN-RIGHT SIDE SIMILAR)

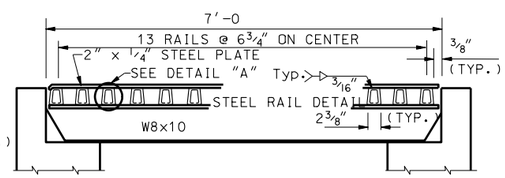

SECTION E-E

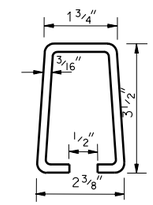

DETAIL "A"

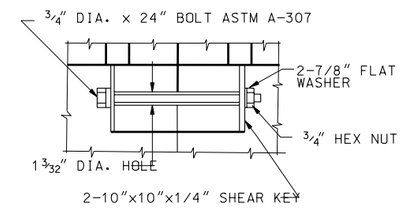

SECTION G-G

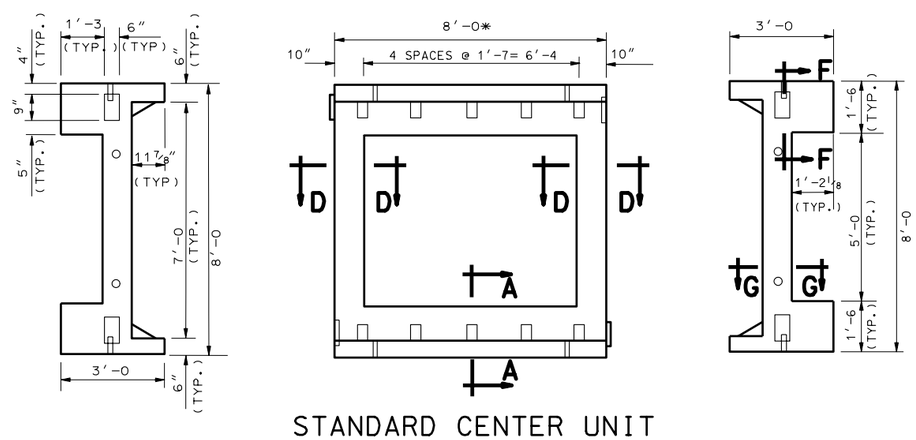

STANDARD CENTER UNIT

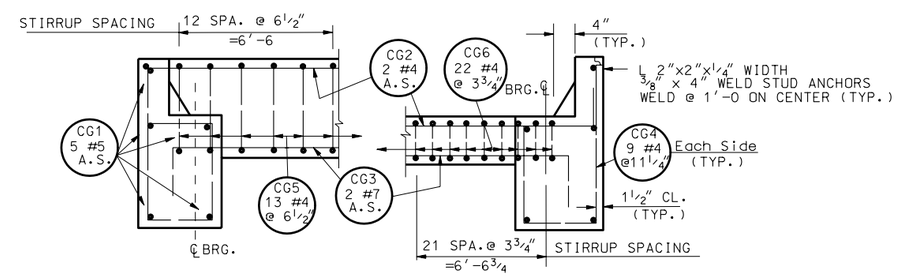

SECTION A-A

** SEE NOTES ON STD DWG SW 1A

REINFORCING STEEL SCHEDULE

MARK	LOCATION	SIZE NO.	NO. BARS	LENGTH	TOTAL LENGTH	SKETCH		
CG1	CATTLE GUARD	5	10	7'-9	77'-6			
						A	B	
CG2	CATTLE GUARD	4	4	9'-5	37'-8	7'-9	10"	
CG3	CATTLE GUARD	7	4	8'-6	34'-0	6'-10	10"	
CG4	CATTLE GUARD	4	18	7'-0	126'-0	1'-9, 1'-3, 1'-3, 2'-9		

MARK	LOCATION	SIZE NO.	NO. BARS	LENGTH	TOTAL LENGTH	SKETCH
CG5	CATTLE GUARD	4	13	4'-2	54'-2	1'-6, 4", 6", 4", 1'-6
CG6	CATTLE GUARD	4	22	2'-8	58'-8	7", 7", 4", 7"

STRUCT. STEEL PER UNIT

ITEM	NO. REQ'D	SIZE	LENGTH
BEAM	4	W8 x 10	7'-0
CHANNEL	2	C8 x 11.5	7'-0
RAIL/END UNIT	13		7'-6
RAIL/CENTER UNIT	13		8'-0
ANGLE	2	L2 x 2 x ¼	8'-0
STUD ANCHOR	16	⅜ DIA.	4"

REVISIONS

NO.	DATE	APPR.	REMARKS

UTAH DEPARTMENT OF TRANSPORTATION
STANDARD DRAWINGS FOR ROAD AND BRIDGE CONSTRUCTION
SALT LAKE CITY, UTAH

RECOMMENDED FOR APPROVAL — JAN.01,2005 DATE
CHAIRMAN STANDARDS COMMITTEE
APPROVED — JAN.01,2005 DATE
DEPUTY DIRECTOR

STANDARD DRAWING TITLE
PRECAST CONCRETE CATTLE GUARD

STD DWG
SW 1B

DGN File:N:\Std\Standard_Drawings\Imperial\2005\Approved\Structures and Walls (SW)\sw01b.dgn
15-DEC-2004

TYPICAL NOISE WALL PLACEMENT LOCATION

R/W LINE APPLICATION

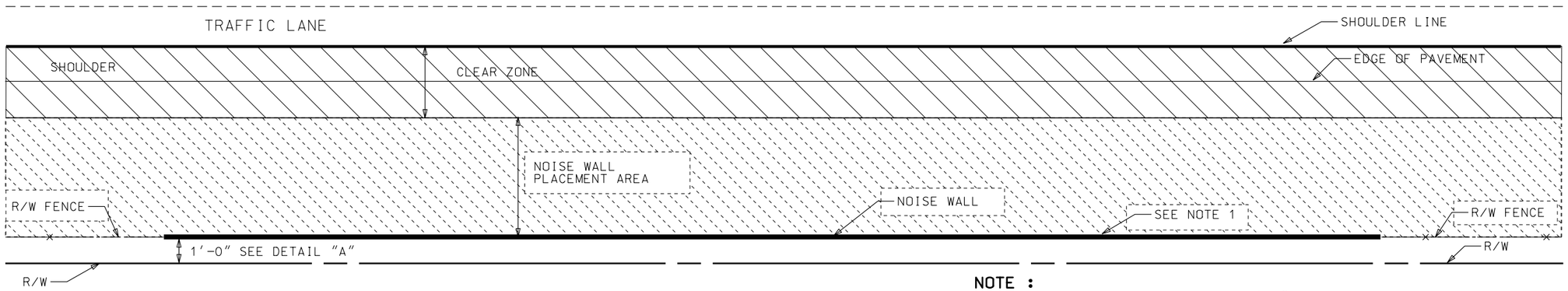

NOTE :

1. PLACE NOISE WALL A MINIMUM OF 1'-0" INSIDE R/W LINE AND CONNECT R/W FENCE TO BOTH ENDS OF WALL. IF NOT PLACED 1'-0" INSIDE R/W LINE, PLACE NO CLOSER THAN 11'-6" FROM R/W LINE FOR MAINTENANCE PURPOSES AND ENVIRONMENTAL CONSIDERATIONS.

N/A LINE APPLICATION

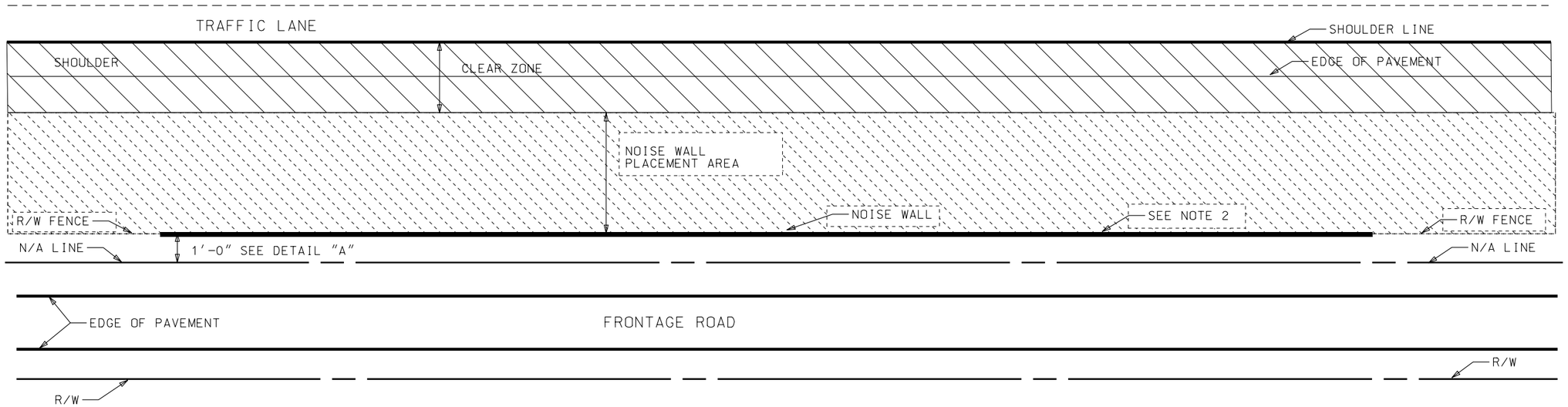

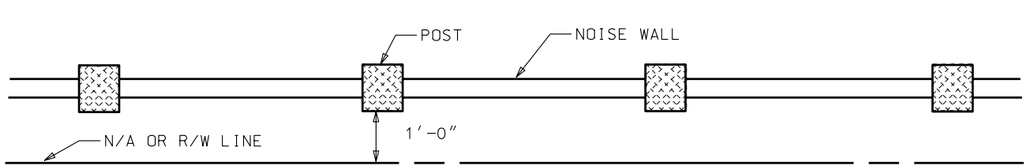

DETAIL "A"

NOTE :

1. WHEN N/A LINE IS PRESENT, PLACE NOISE WALL A MINIMUM OF 1'-0" INSIDE N/A LINE AND CONNECT R/W FENCE TO BOTH ENDS OF WALL. IF NOT PLACED 1'-0" INSIDE R/W LINE, PLACE NO CLOSER THAN 11'-6" FROM R/W LINE FOR MAINTENANCE PURPOSES AND ENVIRONMENTAL CONSIDERATIONS.
2. DO NOT PLACE NOISE WALLS OUTSIDE N/A LINE.

REVISIONS

NO.	DATE	APPR.	REMARKS

UTAH DEPARTMENT OF TRANSPORTATION
STANDARD DRAWINGS FOR ROAD AND BRIDGE CONSTRUCTION
SALT LAKE CITY, UTAH

RECOMMENDED FOR APPROVAL — JAN.01,2005 DATE
CHAIRMAN STANDARDS COMMITTEE APPROVED — JAN.01,2005 DATE
DEPUTY DIRECTOR

NOISE WALL PLACEMENT AREA
STANDARD DRAWING TITLE

STD DWG
SW 2

DGN File:N:\Eas\Standard_Drawings\Imperial\2005Approved\Structures and Walls (SW)\sw02.dgn
15-DEC-2004

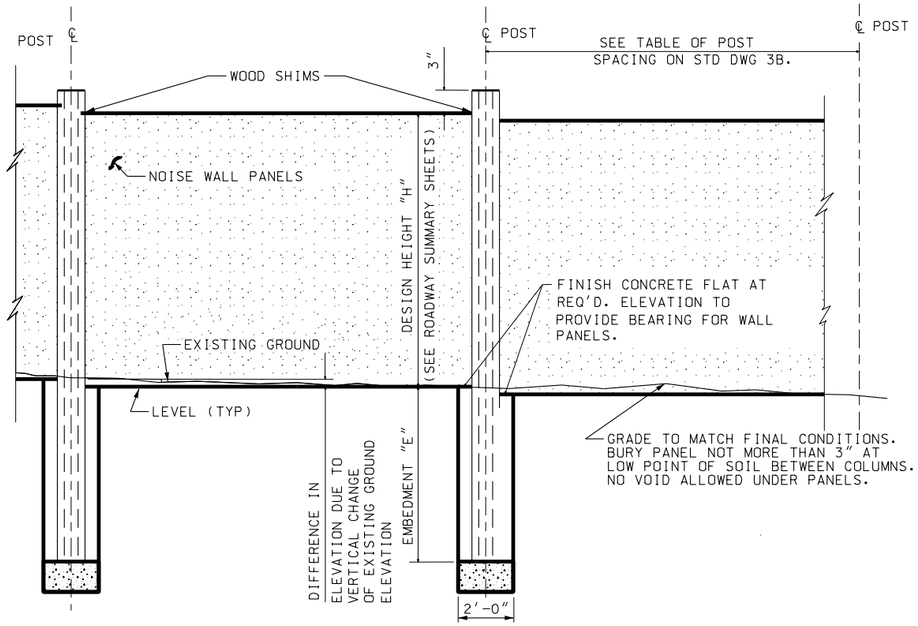

TYPICAL ELEVATION

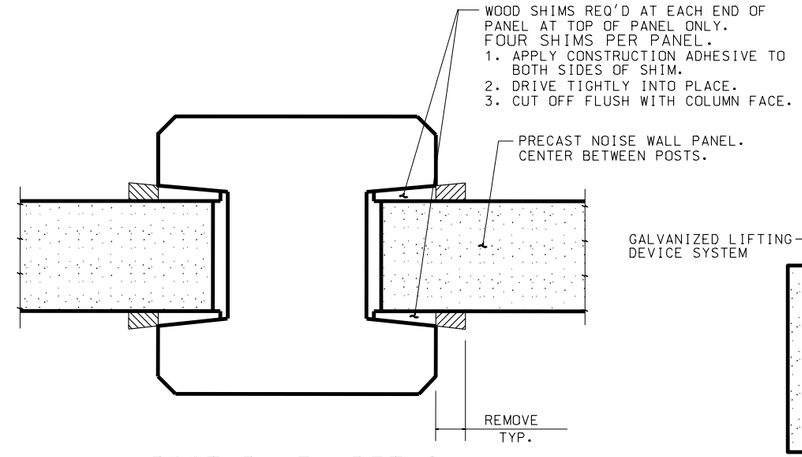

POST PANEL DETAIL

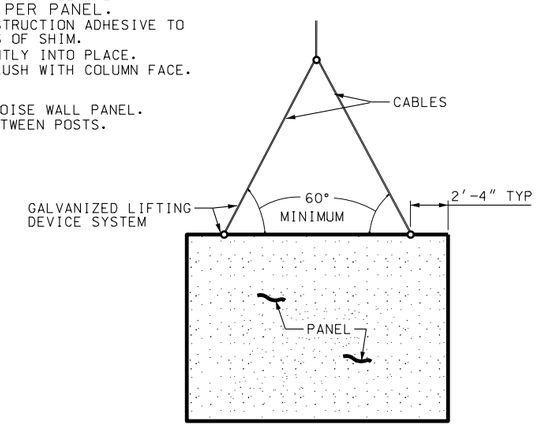

LIFTING DEVICE DETAIL

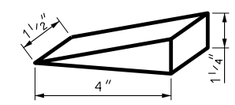

WOOD SHIM DETAIL

NOTES:

1. CHAMFER EXPOSED CONCRETE CORNERS AS SHOWN.
2. PROVIDE 2" COVER TO REINFORCING STEEL EXCEPT WHERE NOTED OTHERWISE.
3. SEE ROADWAY PLANS FOR LOCATION AND HEIGHT OF PRECAST NOISE WALL.
4. ALL PANELS ARE 11'-5" LONG AND 5" THICK.
5. SEE STD DWG SW 2 "NOISE WALL PLACEMENT AREA" FOR ADDITIONAL PLACEMENT INFORMATION.

DESIGN DATA

AASHTO GUIDE SPECIFICATIONS FOR STRUCTURAL DESIGN OF SOUND BARRIERS.
CONCRETE CLASS 4A(AE) f'c= 5,000 psi; fs (REINF.)= 24,000 psi; n=8.
CONCRETE CLASS B(AE) f'c= 2,500 psi (FOR HOLES AROUND POSTS ONLY).

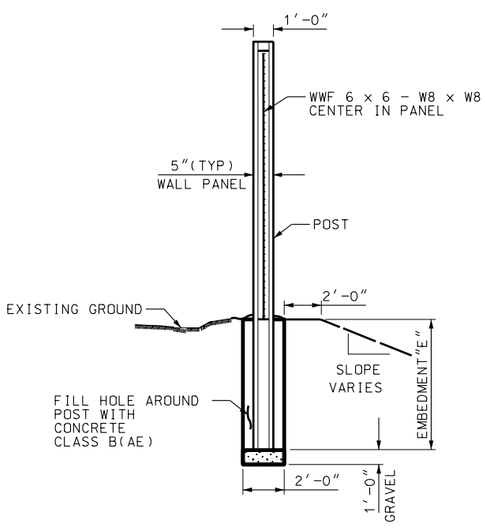

TYPICAL SECTION

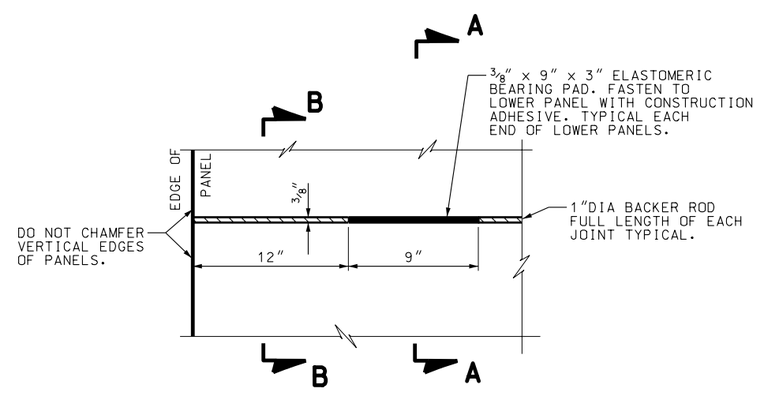

BEARING DETAIL

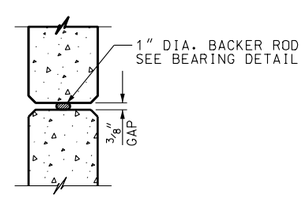

SECTION B-B

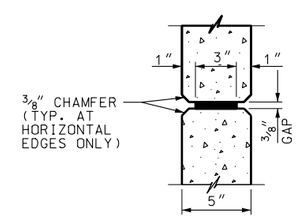

SECTION A-A

NO.	DATE	APPR.	REVISIONS	REMARKS

UTAH DEPARTMENT OF TRANSPORTATION
STANDARD DRAWINGS FOR ROAD AND BRIDGE CONSTRUCTION
SALT LAKE CITY, UTAH

RECOMMENDED FOR APPROVAL — JAN.01,2005 DATE
CHAIRMAN STANDARDS COMMITTEE APPROVED — JAN.01,2005 DATE
DEPUTY DIRECTOR

PRECAST CONCRETE NOISE WALL 1 OF 2
STANDARD DRAWING TITLE

STD DWG
SW 3A

DGN: F:\pw_work\Eng\Standard Drawings\Imperial\2005\Structures and Walls (SW)\sw03a.dgn
15-DEC-2004

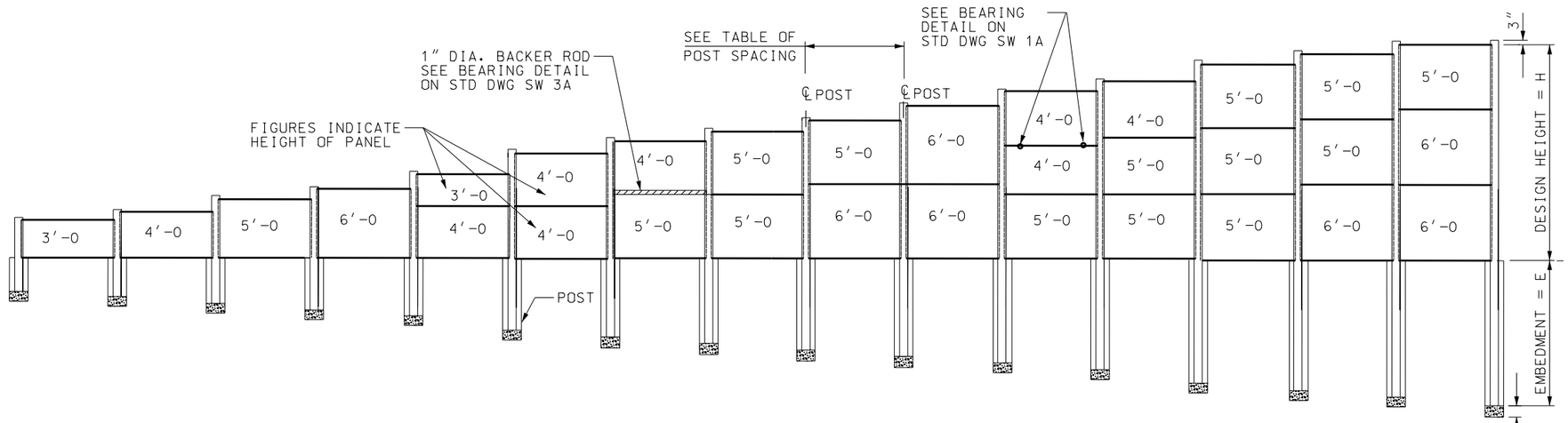

ELEVATION OF PRECAST NOISE WALL

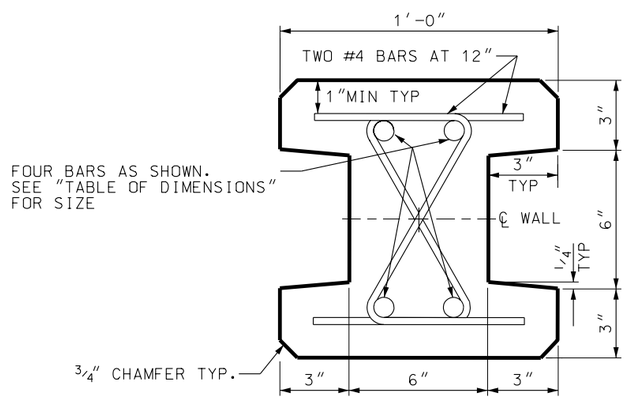

SECTION THRU TYPE I POST
θ = 0° TO 10°

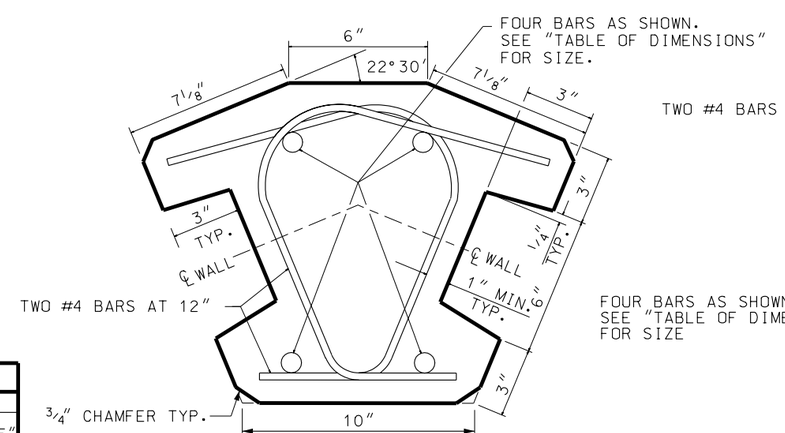

SECTION THRU TYPE II POST
FOR θ = 35° TO 55°

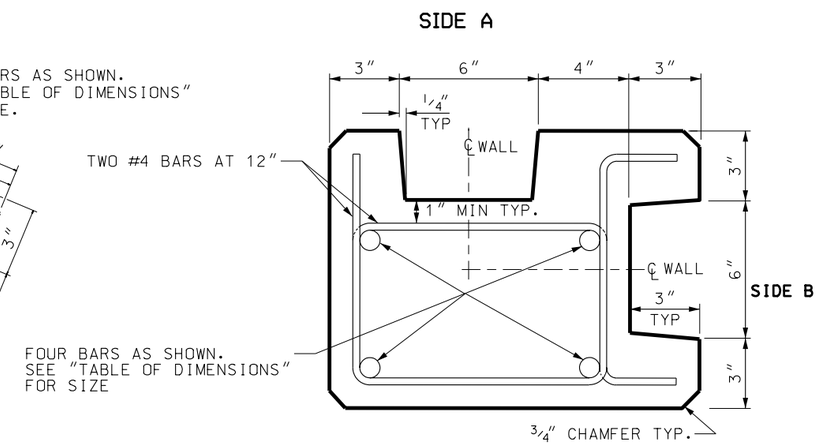

SECTION THRU TYPE III POST
θ= 80° TO 100°

TABLE OF DIMENSIONS					
DESIGN H	PANEL HEIGHT			POST	
H	TOP PANEL	CENTER PANEL	BOTTOM PANEL	VERTICAL BAR SIZE	EMBEDMENT "E"
3'	3'			#5	1'-6
4'	4'			#5	2'-0
5'	5'			#5	2'-6
6'	6'			#5	3'-0
7'	3'		4'	#5	3'-6
8'	4'		4'	#5	4'-0
9'	4'		5'	#5	4'-6
10'	5'		5'	#5	5'-0
11'	5'		6'	#6	5'-6
12'	6'		6'	#6	6'-0
13'	4'	4'	5'	#7	6'-6
14'	4'	5'	5'	#7	7'-0
15'	5'	5'	5'	#8	7'-6
16'	5'	5'	6'	#9	8'-0
17'	5'	6'	6'	#9	8'-6

POST SPACING	
℄ POST TO ℄ POST	REQ'D SPACING
TYPE I	12'-0
TYPE I TO TYPE II	12'-2
TYPE I TO TYPE III SIDE A	12'-0
TYPE I TO TYPE III SIDE B	12'-4
TYPE II TO TYPE II	12'-4
TYPE II TO TYPE III SIDE A	12'-4
TYPE II TO TYPE III SIDE B	12'-6
TYPE III SIDE A TO TYPE III SIDE A	12'-0
TYPE III SIDE A TO TYPE III SIDE B	12'-4
TYPE III SIDE B TO TYPE III SIDE B	12'-8

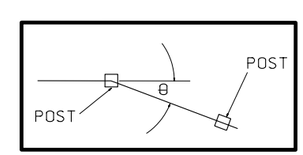

REVISIONS

NO.	DATE	APPR.	REMARKS

UTAH DEPARTMENT OF TRANSPORTATION
STANDARD DRAWINGS FOR ROAD AND BRIDGE CONSTRUCTION
SALT LAKE CITY, UTAH

RECOMMENDED FOR APPROVAL — JAN.01,2005 DATE
CHAIRMAN STANDARDS COMMITTEE APPROVED — JAN.01,2005 DATE
DEPUTY DIRECTOR

PRECAST CONCRETE NOISE WALL 2 OF 2

STANDARD DRAWING TITLE

STD DWG
SW 3B

15-DEC-2004 DGN File:N:\Esd\Standard Drawings\Imperial\2005Approved\Structures and Walls (SW)\sw03b.dgn

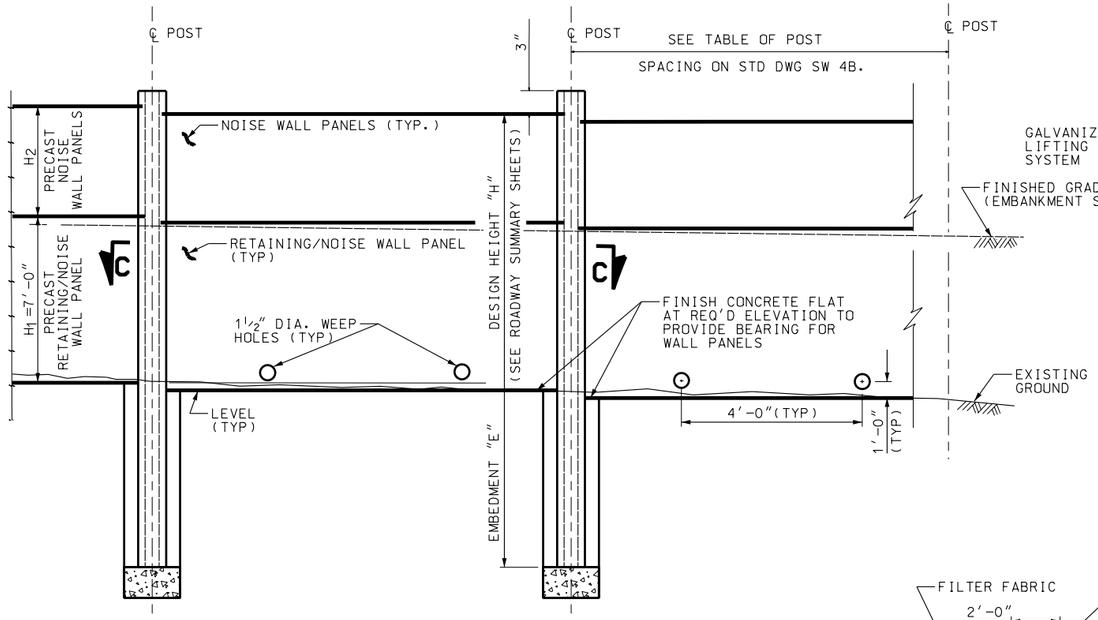

TYPICAL ELEVATION

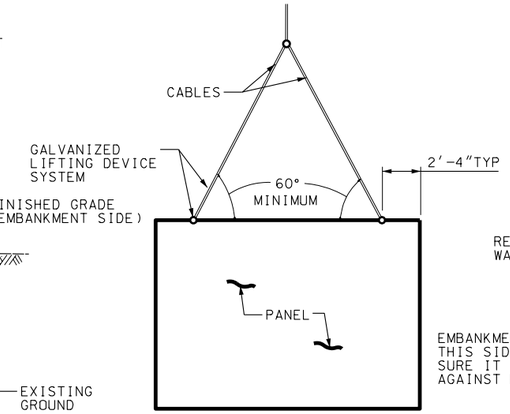

LIFTING DEVICE DETAIL

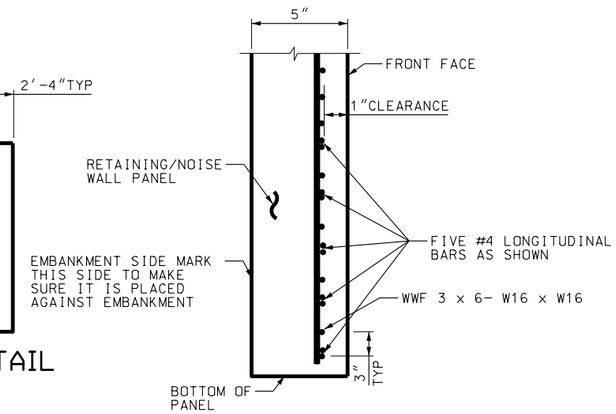

DETAIL "A"
(RETAINING/NOISE WALL PANEL ONLY)

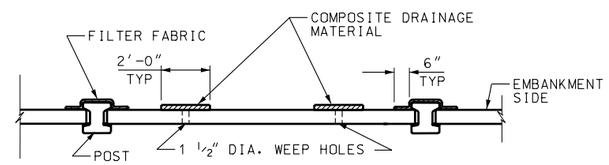

SECTION C-C

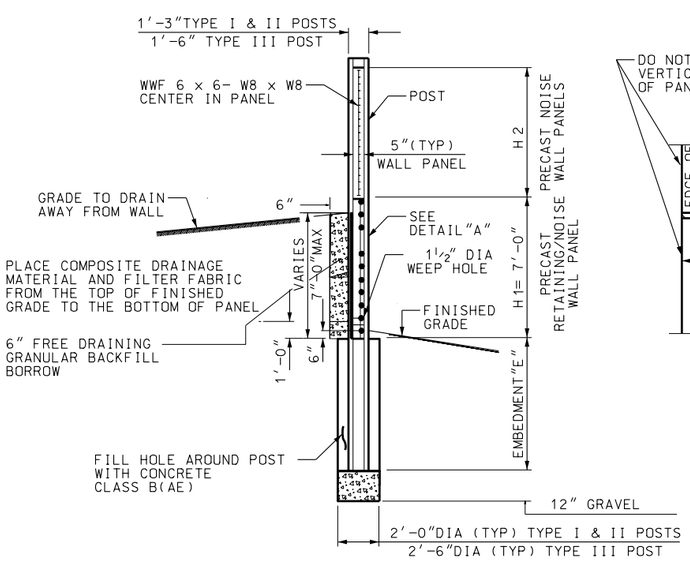

TYPICAL SECTION

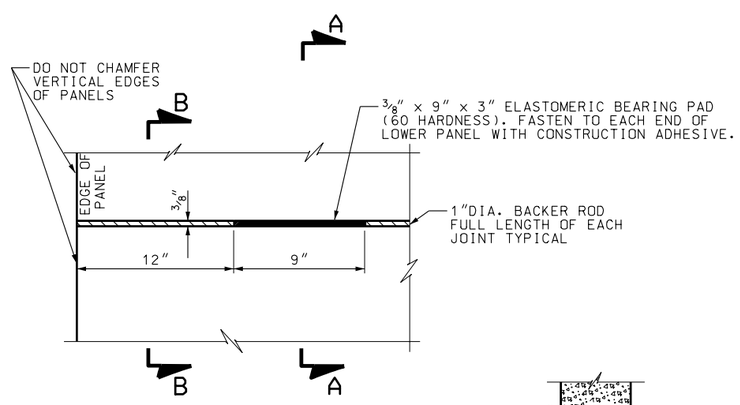

BEARING DETAIL

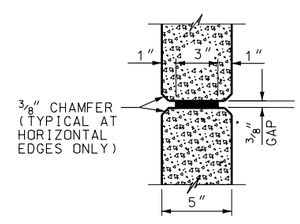

SECTION A-A

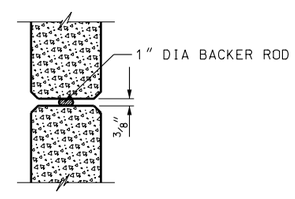

SECTION B-B

NOTES:

1. CHAMFER EXPOSED CONCRETE CORNERS AS SHOWN.
2. PROVIDE 2" COVER TO REINFORCING STEEL EXCEPT WHERE NOTED OTHERWISE.
3. SEE ROADWAY PLANS FOR LOCATION AND HEIGHT OF PRECAST RETAINING/NOISE WALL.
4. ALL PANELS ARE 11'-5" LONG AND 5" THICK.
5. SEE STD DWG SW 2 "NOISE WALL PLACEMENT AREA" FOR ADDITIONAL PLACEMENT INFORMATION.

DESIGN DATA

AASHTO GUIDE SPECIFICATIONS FOR STRUCTURAL DESIGN OF SOUND BARRIERS.
CONCRETE CLASS 4A(AE) f'c= 5,000 psi; fs (REINF.)= 24,000 psi; n=8.
CONCRETE CLASS B(AE) f'c= 2,500 psi (FOR HOLES AROUND POSTS ONLY)
EARTH PRESSURE = 36 lb./ft³

NO.	DATE	APPR.	REMARKS

REVISIONS

UTAH DEPARTMENT OF TRANSPORTATION
STANDARD DRAWINGS FOR ROAD AND BRIDGE CONSTRUCTION
SALT LAKE CITY, UTAH

RECOMMENDED FOR APPROVAL — JAN.01,2005 DATE
CHAIRMAN STANDARDS COMMITTEE
APPROVED — JAN.01,2005 DATE
DEPUTY DIRECTOR

PRECAST CONCRETE RETAINING/NOISE WALL 1 OF 2

STANDARD DRAWING TITLE

STD DWG
SW 4A

DGN: Exlan:NA\Eng\Standard Drawings\Highway\2005\Concrete\Structures and Walls (SW)\sw04a.dgn
15-DEC-2004

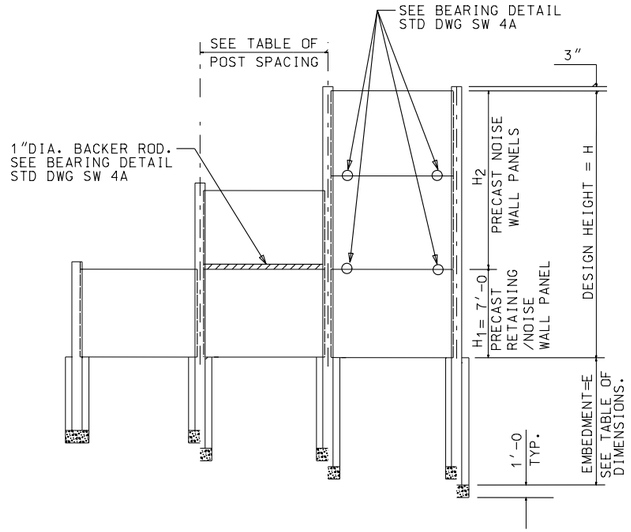

ELEVATION OF PRECAST RETAINING/NOISE WALL

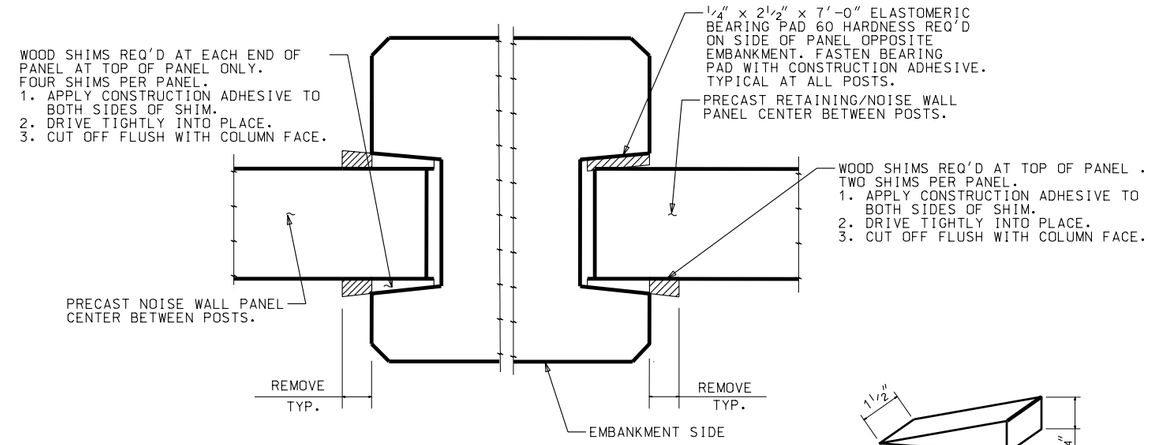

POST/PANEL DETAIL

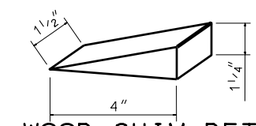

WOOD SHIM DETAIL

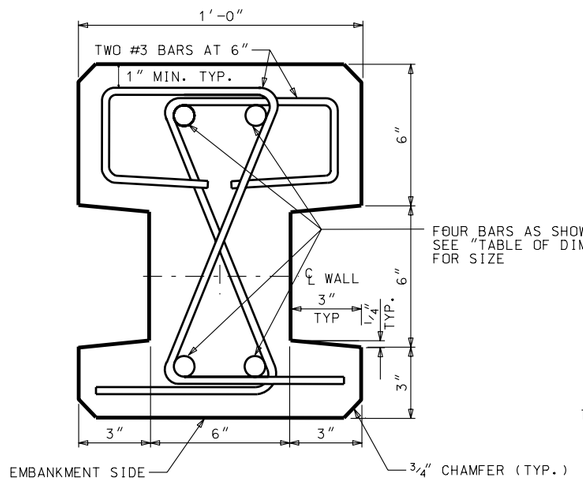

SECTION THRU TYPE I POST

θ=0° TO 10°

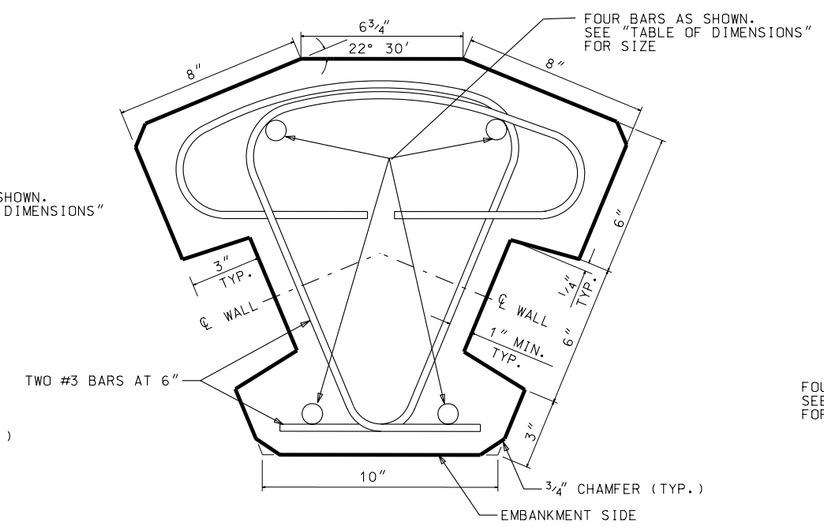

SECTION THRU TYPE II POST

θ=35° TO 55°

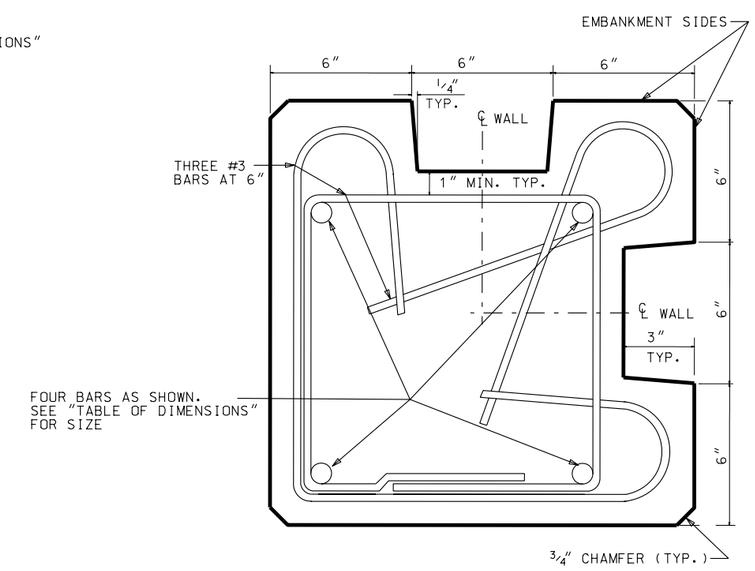

SECTION THRU TYPE III POST

θ=80° TO 100°

TABLE OF DIMENSIONS							
DESIGN H			PANEL HEIGHT			POST	
H_1	+ H_2	= H	TOP PANEL	CENTER PANEL	BOTTOM PANEL	VERTICAL BAR SIZE	EMBEDMENT "E"
7'		7'			7'	#7	4'-8
7'	3'	10'	3'		7'	#7	6'-8
7'	4'	11'	4'		7'	#7	7'-4
7'	5'	12'	5'		7'	#7	8'-0
7'	6'	13'	6'		7'	#7	8'-8
7'	7'	14'	3'	4'	7'	#8	9'-4
7'	8'	15'	4'	4'	7'	#8	10'-0
7'	9'	16'	4'	5'	7'	#8	10'-8
7'	10'	17'	5'	5'	7'	#9	11'-4
7'	11'	18'	5'	6'	7'	#9	12'-0
7'	12'	19'	6'	6'	7'	#9	12'-8

POST SPACING	
℄ POST TO ℄ POST	REQ'D SPACING
TYPE I TO TYPE I	12'-0
TYPE I TO TYPE II	12'-2
TYPE I TO TYPE III	12'-3
TYPE II TO TYPE II	12'-4
TYPE II TO TYPE III	12'-5

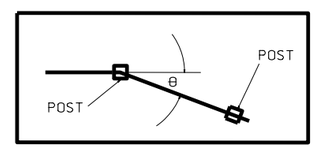

REVISIONS

NO.	DATE	APPR.	REMARKS
1	02/23/06	B.A.	CORRECTED PAD HARDNESS IN POST/PANEL DETAIL.

UTAH DEPARTMENT OF TRANSPORTATION
STANDARD DRAWINGS FOR ROAD AND BRIDGE CONSTRUCTION
SALT LAKE CITY, UTAH

RECOMMENDED FOR APPROVAL — FEB.23,2006 DATE
CHAIRMAN STANDARDS COMMITTEE APPROVED — FEB.23,2006 DATE
DEPUTY DIRECTOR

PRECAST CONCRETE RETAINING/NOISE WALL 2 OF 2

STANDARD DRAWING TITLE

STD DWG
SW 4B

TYPE I

TYPE II

BARRICADES

NOTES 1, 2

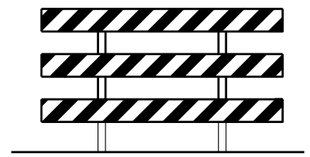

TYPE III

NOTE 2

ADVANCE WARNING ARROW PANELS

SEE NOTE 3

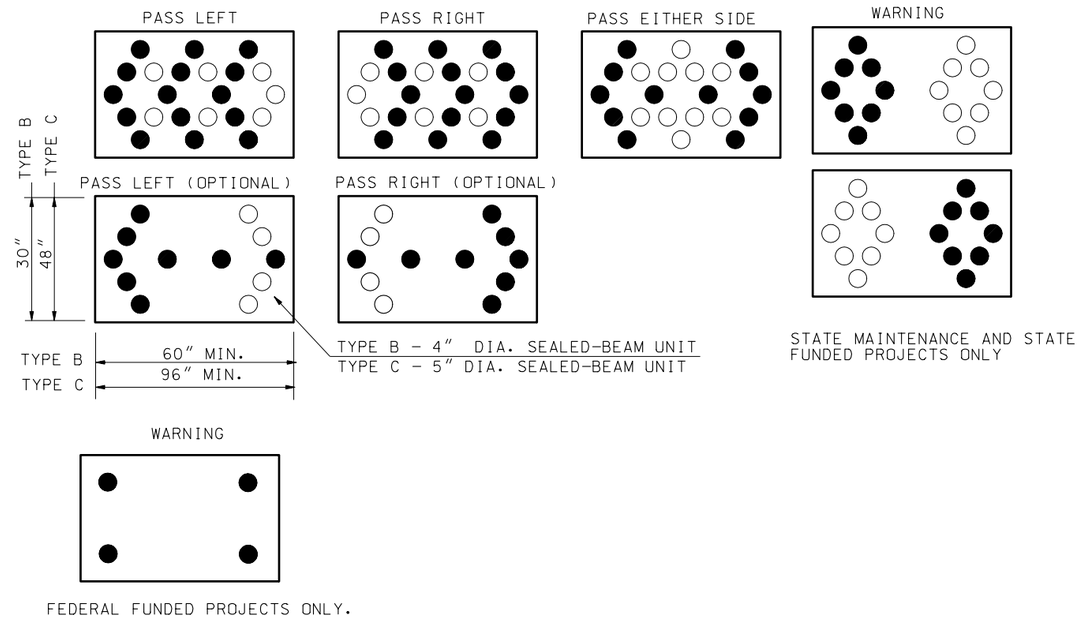

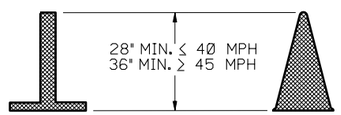

TUBULAR MARKERS

DAYLIGHT HOURS ONLY

CONES

DAYLIGHT HOURS ONLY

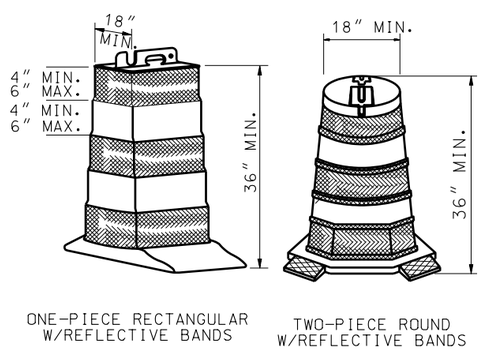

PLASTIC DRUMS

SEE NOTE 4

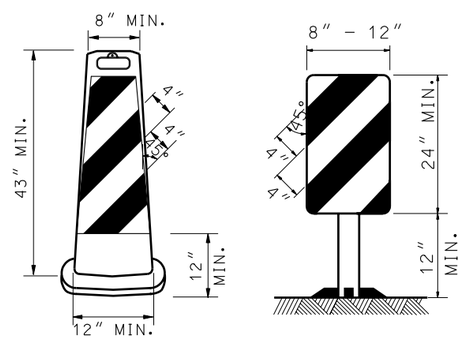

VERTICAL PANELS

SEE NOTE 1

NOTES:

1. A MINIMUM OF 270 SQUARE INCHES OF RETROREFLECTIVE MATERIAL PLACED A MINIMUM OF 12 INCHES ABOVE THE ROADWAY SURFACE IS REQUIRED ON BARRICADES AND VERTICAL PANELS WHEN USED ON THE INTERSTATE OR ROADWAYS WITH A POSTED SPEED OF GREATER THAN 45 MPH. PLACE BARRICADES AND VERTICAL PANELS IN SUCH A MANNER THAT THEY ARE VISIBLE TO APPROACHING TRAFFIC.
2. USE SANDBAGS WITH SAND OR OTHER COMPARABLE SOFT MATERIAL AS BALLAST. DO NOT PLACE BALLAST HIGHER THAN 12 INCHES ABOVE THE ROADWAY AND DO NOT COVER ANY REFLECTIVE AREA OF RAILS OR SIGNS.
3. PLACE THE BOTTOM EDGE OF THE ADVANCE WARNING ARROW PANELS A MINIMUM OF 7 FEET ABOVE THE ROADWAY SURFACE.
4. USE PLASTIC DRUMS AS LANE CLOSURE TAPER DEVICES FOR SPEEDS 50 MPH AND GREATER.

REVISIONS

NO.	DATE	APPR.	REMARKS

UTAH DEPARTMENT OF TRANSPORTATION
STANDARD DRAWINGS FOR ROAD AND BRIDGE CONSTRUCTION
SALT LAKE CITY, UTAH

RECOMMENDED FOR APPROVAL — JAN.01.2005 DATE
CHAIRMAN STANDARDS COMMITTEE
APPROVED — JAN.01.2005 DATE
DEPUTY DIRECTOR

CONSTRUCTION ZONE CHANNELIZATION DEVICES

STANDARD DRAWING TITLE

STD DWG

TC 1A

DGN File:N:\Esa\Standard.Drawings\Imperial\2005Approved\Traffic Control (TC)\tc01a.dgn

15-DEC-2004

NOTES 1, 5

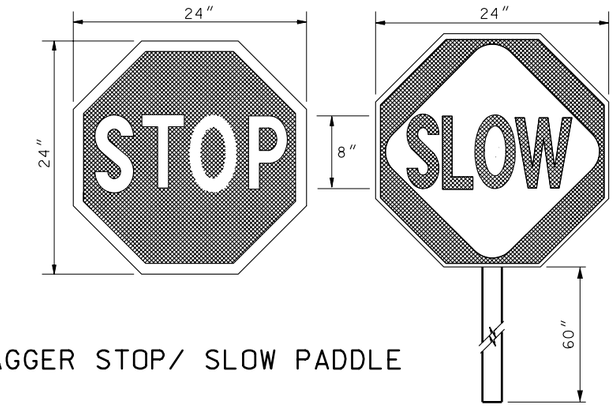

FLAGGER STOP/ SLOW PADDLE

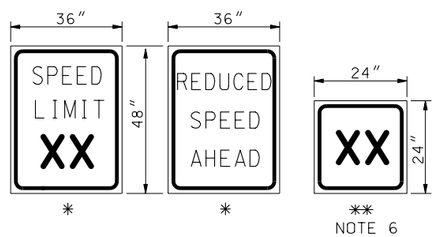

REDUCED SPEED SIGNING

* REGULATORY - BLACK/WHITE
** ADVISORY - BLACK/ORANGE
XX SPEED

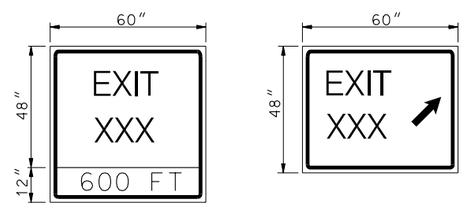

EXIT RAMP SIGNING

BLACK/ORANGE
XXX EXIT NUMBER

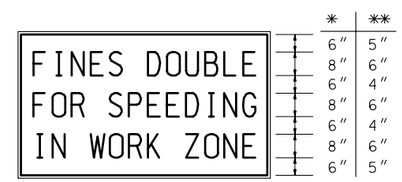

FINES DOUBLE SIGN
- LONG TERM APPLICATION

* 84" X 48" FREEWAY
** 60" X 36" CONVENTIONAL HIGHWAYS
USE SERIES "C" STANDARD HIGHWAYS ALPHABET
BLACK/ORANGE

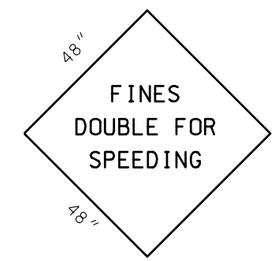

FINES DOUBLE SIGN
- SHORT TERM APPLICATION

USE 7" SERIES "C" STANDARD HIGHWAY ALPHABET
USE ON RAMPS AND SIDE STREET APPROACHES
BLACK/ORANGE

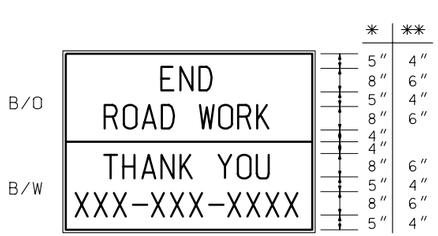

CONSTRUCTION ZONE
INFORMATION SIGN

* 84" X 60" FREEWAY
** 60" X 48" CONVENTIONAL HIGHWAYS
USE SERIES "C" STANDARD HIGHWAYS ALPHABET
XXX CONTRACTOR'S PHONE NUMBER

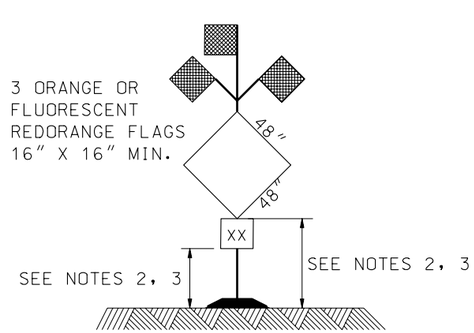

TYP. SIGN INSTALLATION
WITH FLAGS

SEE NOTES 4, 5

NOTES

1. CLOSE ROADWAYS WITH TYPE III BARRICADES. EXTEND THE BARRICADES ACROSS INTENDED ROAD CLOSURE A MINIMUM OF 3/4 OF THE ROADWAY STARTING FROM THE CENTER OF THE ROADWAY AND EXTENDING IN BOTH DIRECTIONS TOWARD THE SHOULDERS. PLACE A "ROAD CLOSED" SIGN (R11-2) OVER THE CENTER LINE AND THE APPROPRIATE "DETOUR" ARROW SIGNS (M4-10 L OR R) ON EACH SIDE OF THE "ROAD CLOSED" SIGN. DETOUR ARROWS ARE NOT REQUIRED IF DETOUR IS NOT AT ROAD CLOSURE.
2. SIGNS ON PORTABLE STANDS REQUIRE A 12 INCH MINIMUM MOUNTING HEIGHT.
3. SIGNS ON PORTABLE STANDS PLACED AMONG CHANNELIZING DEVICES REQUIRE A 36 INCH MINIMUM MOUNTING HEIGHT.
4. SIGNS USING POST TYPES P1,P2 OR P3 REQUIRE A MINIMUM 84 INCHES MOUNTING HEIGHT FROM ROADWAY SURFACE. REFER TO SN SERIES STANDARD DRAWINGS.
5. PLACE TWO ORANGE STRIPS OF REFLECTIVE SHEETING, 4 INCHES X 24 INCHES, VERTICALLY, 12 INCHES FROM THE RIGHT AND LEFT CORNERS ON THE BACK OF SIGNS USED WITH PORTABLE STANDS. USE THE SAME GRADE OF REFLECTIVE SHEETING AS USED ON THE FRONT OF THE SIGN.
6. USE SANDBAGS WITH SAND OR OTHER COMPARABLE SOFT MATERIAL AS BALLAST. DO NOT PLACE BALLAST HIGHER THAN 12 INCHES ABOVE THE ROADWAY AND DO NOT COVER ANY REFLECTIVE AREA OF RAILS OR SIGNS.
7. PLACE ADVISORY SPEED LIMIT SIGNS ONLY IN COMBINATION WITH AND BELOW A WARNING SIGN.

NO.	DATE	APPR.	REMARKS

REVISIONS

UTAH DEPARTMENT OF TRANSPORTATION
STANDARD DRAWINGS FOR ROAD AND BRIDGE CONSTRUCTION
SALT LAKE CITY, UTAH

RECOMMENDED FOR APPROVAL — JAN.01,2005 DATE
CHAIRMAN STANDARDS COMMITTEE APPROVED — JAN.01,2005 DATE
DEPUTY DIRECTOR

CONSTRUCTION ZONE SIGNING
STANDARD DRAWING TITLE

STD DWG
TC 1B

DGN File:N:\Esd\Standard Drawings\Imperial\2005Approved\Traffic Control (TC)\tc01b.dgn
15-DEC-2004

HAZARD MITIGATION

1. USE CONSTRUCTION CLEAR ZONE DISTANCE IDENTIFIED IN TABLE 1 TO MITIGATE THE FOLLOWING HAZARDS.
   HAZARDS
   A. NON-WORKING EQUIPMENT OR VEHICLES
   B. STOCKPILED MATERIAL
   C. WORKING VEHICLES AND WORKERS (NON-FLAGGERS)
   D. OTHER OBJECTS AND FEATURES (IE: BRIDGE PARAPETS, BARRIER BLUNT ENDS, POLES)
   E. VERTICAL DROP-OFF LESS THAN 48 INCHES OR SLOPES STEEPER THAN 4:1
2. MITIGATE ALL OTHER HAZARDS OR DROP-OFFS GREATER THAN 48 INCHES WITHIN AASHTO CLEAR ZONE AS APPROVED BY THE REGION TRAFFIC ENGINEER.

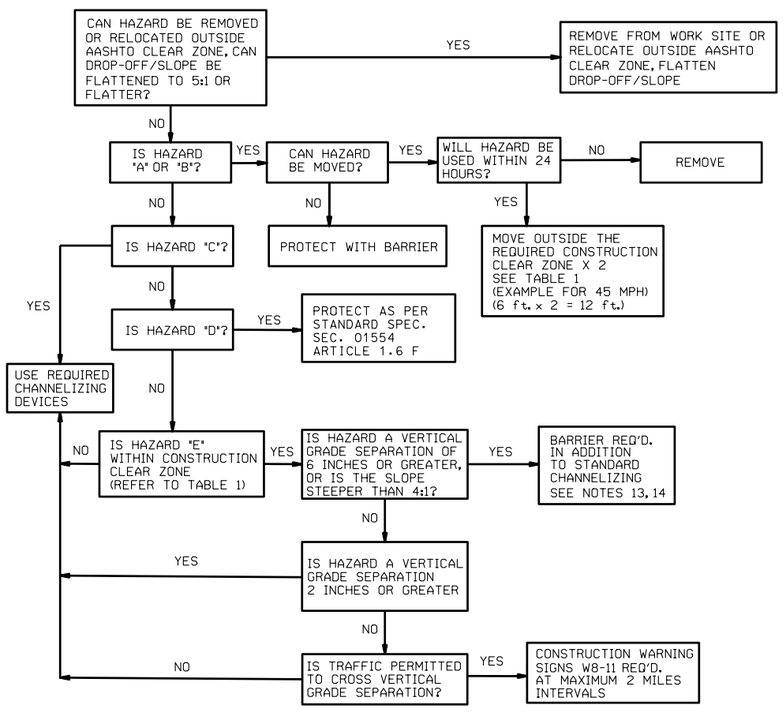

DETAIL AA

NOTES:

1. USE CURRENT EDITION OF UDOT STANDARDS AND MUTCD FOR TRAFFIC CONTROL.
2. SEE STD DWG TC 1A AND TC 1B FOR CONSTRUCTION ZONE SIGNING AND DEVICE REQUIREMENT.
3. COVER OR REMOVE NON-APPLICABLE SIGNING, BOTH EXISTING AND CONSTRUCTION SIGNS. REMOVE NON-APPLICABLE PAVEMENT MARKINGS.
4. REMOVE NON-APPLICABLE PORTABLE SIGNS OR MOVE BEYOND A DISTANCE TWICE THAT OF THE CONSTRUCTION CLEAR ZONE. (SEE TABLE 1 AND DETAIL AA).
5. REFER TO STANDARD SPECIFICATION 01554 FOR FLAGGING REQUIREMENT FOR OPERATING TRAFFIC SIGNALS.
6. USE A FULL LANE CLOSURE WHEN WORK ENCROACHES INTO A TRAFFIC LANE, UNLESS THE TRAFFIC LANE CAN BE RECREATED.
7. CLEAN AND RESTORE PAVEMENT MARKINGS AT THE END OF EACH DAY'S OPERATION, BOTH ON AND OFF THE PROJECT, THAT ARE OBSCURED BY WORK OPERATIONS.
8. LIMIT ADVISORY AND REGULATORY SPEED REDUCTION OF 10 MPH, WITH THE APPROVAL FROM THE ENGINEER. FOR REDUCTIONS EXCEEDING 10 MPH, OBTAIN APPROVAL FROM THE REGION TRAFFIC ENGINEER. USE SPEED REDUCTIONS ONLY DURING IMPACTED TIMES AND AREAS. RESTORE REGULATORY SPEED LIMIT AT LOCATIONS WHERE TRAFFIC IS NOT BEING IMPACTED BY CONSTRUCTION ACTIVITIES.
9. USE THE POSTED SPEED LIMIT PRIOR TO CONSTRUCTION TO COMPUTE THE SIGN SPACING, TAPER LENGTH, BUFFER ZONE, AND CONSTRUCTION CLEAR ZONE DISTANCE. USE THE POSTED SPEED LIMIT DURING CONSTRUCTION TO DETERMINE THE TANGENT SPACING FOR CHANNELIZING DEVICES.
10. USE PLASTIC DRUMS FOR LANE CLOSURE TAPER DEVICES FOR SPEEDS 50 MPH AND GREATER.
11. USE DOWNSTREAM TAPER FOR OPERATIONS LONGER THAN 3 DAYS.
12. PLACE ADVANCE WARNING ARROW PANEL IN THE FIRST 1/3 OF THE TAPER.
13. USE AN APPROVED CONSTRUCTION ZONE ATTENUATOR WITH TEMPORARY PRECAST CONCRETE BARRIER WHEN APPROACH ENDS ARE WITHIN AASHTO CLEAR ZONE. DO NOT USE A TRUCK MOUNTED ATTENUATOR FOR ANY PERIOD LONGER THAN 24 HOURS.
14. USE PROPER LENGTH OF NEED FOR TEMPORARY BARRIER AS PER THE REQUIREMENTS OF THE CURRENT EDITION OF THE ROADSIDE DESIGN GUIDE. USE POSTED SPEED LIMIT PRIOR TO THE CONSTRUCTION ZONE FOR THE DESIGN OF THE REQUIRED LENGTH OF NEED. USE TABLE 2 FOR THE CONSTRUCTION ZONE FLARE RATE REQUIREMENT FOR TEMPORARY BARRIER. APPROVAL FROM THE REGION TRAFFIC ENGINEER IS REQUIRED FOR MODIFICATION TO THE REQUIRED FLARE RATE.

TABLE 1
CONSTRUCTION CLEAR ZONE

MPH	feet
40 & LESS	3
45	6
50	6.5
55	7.5
60	8
65	8.5
70	9
75	10.5

TABLE 2
CONSTRUCTION ZONE FLARE RATES
TEMPORARY BARRIER

MPH	FLARE
≥70	20:1
65	18:1
60	17:1
55	16:1
50	14:1
45	10:1
≤40	6:1

REVISIONS

NO.	DATE	APPR.	REMARKS

UTAH DEPARTMENT OF TRANSPORTATION
STANDARD DRAWINGS FOR ROAD AND BRIDGE CONSTRUCTION
SALT LAKE CITY, UTAH

RECOMMENDED FOR APPROVAL — JAN.01.2005 DATE
CHAIRMAN STANDARDS COMMITTEE APPROVED — JAN.01.2005 DATE
DEPUTY DIRECTOR

TRAFFIC CONTROL GENERAL
STANDARD DRAWING TITLE

STD DWG
TC 2A

DGN File: N:\Esa\Standard.Drawings\Imperial\2005Approved\Traffic Control (TC)\tc02a.dgn
15-DEC-2004

TAPER, BUFFER ZONE & SIGN SPACING CHART

	POSTED SPEED MPH(S)	MINIMUM TAPER LENGTH(L)	LENGTH OF BUFFER(BZ)	MINIMUM SIGN SPACING(SS)			ONE LANE TWO-WAY FLAGGING
		12' LANE CLOSURE	DESIRABLE	A	B	C	TAPER LENGTH
		feet	feet	feet	feet	feet	feet
NON INTER STATE	30 AND LOWER	180	100	100	100	100	50
	35	245	120	350	350	350	
	40	320	165				
	45	540	220	500	500	500	100
	50	600	280				
	55	660	335				
	60	720	415				
	65	780	485				
INTER STATE	65	780	485	1000	1500	2640	
	70	840	600				
	75	900	700				

1- TAPER FORMULAS

A) LANE TAPER LENGTH IN FEET

$L = SW \geq$ 45 MPH $\quad L = \frac{WS^2}{60} \leq$ 40 MPH

1/3 L = FOR SHOULDER CLOSURE TAPER

1/2 L = FOR LANE SHIFT TAPER

WHERE L = TAPER LENGTH

W = WIDTH OF CLOSURE OR SHIFT

S = POSTED SPEED

2- CHANNELIZING DEVICES

A) USE A MINIMUM OF 1 DEVICE PER FOOT OF LANE CLOSURE, PLUS 1 ADDITIONAL DEVICE TO START.

B) ON TANGENT: S X 2 = SPACING UP TO 100 FEET MAXIMUM.

C) LENGTH OF BUFFER ZONE (BZ) IS THE DISTANCE FROM END OF LANE CLOSURE TAPER TO WORK AREA, OR ANY OBSTRUCTION PRIOR TO WORK AREA.

TRAFFIC CONTROL DEVICE LEGEND

- SIGN (PORTABLE OR FIXED)
- CHANNELIZING DEVICE (SEE STD DWG TC 1)
- PLASTIC DRUMS
- FLAGGING STATION
- ADVANCE WARNING ARROW PANEL
- BARRIER
- DIRECTION OF TRAFFIC
- TYPE III BARRICADE
- DIRECTION OF WORK VEHICLE

REDUCED SPEED WORK ZONE SIGNING

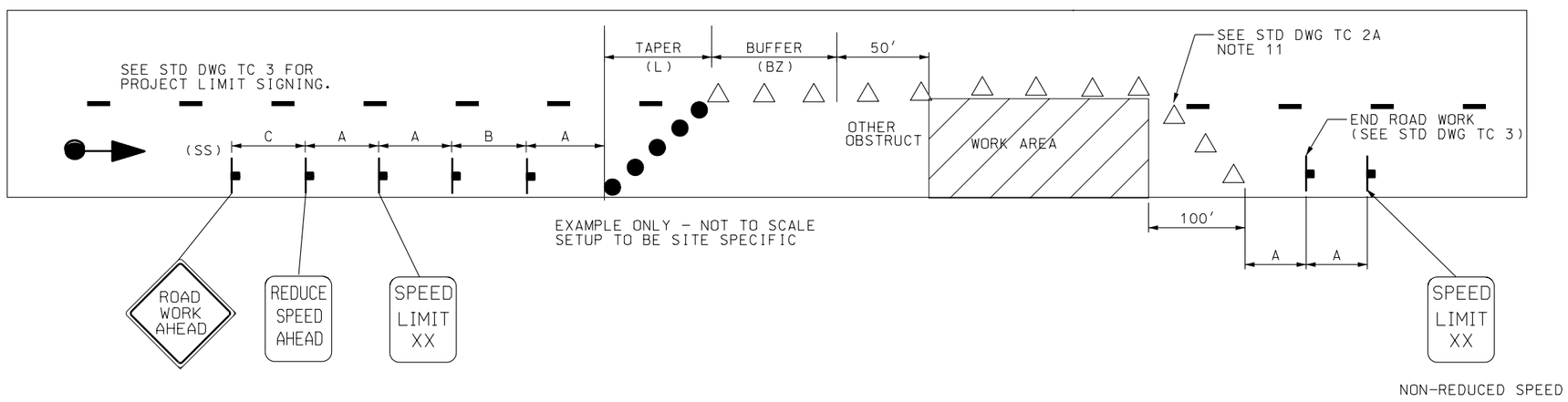

STANDARD WORK ZONE SIGNING

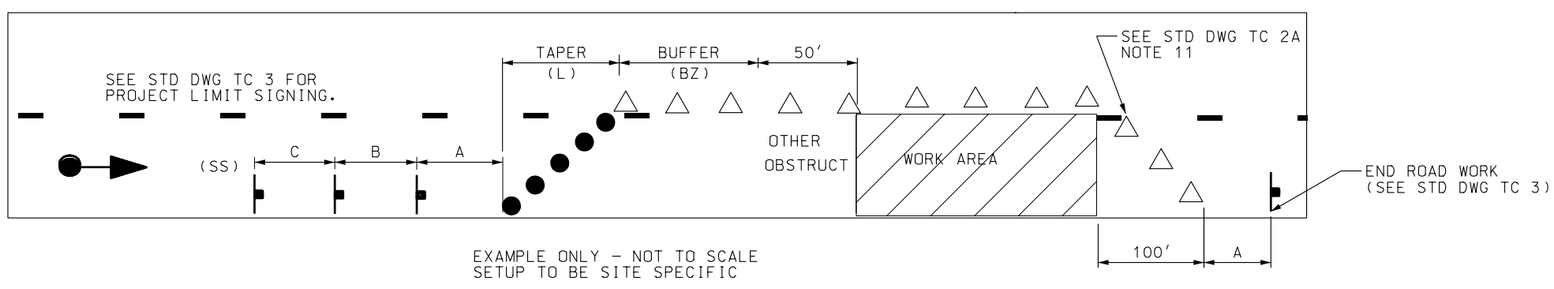

REVISIONS

NO.	DATE	APPR.	REMARKS

UTAH DEPARTMENT OF TRANSPORTATION
STANDARD DRAWINGS FOR ROAD AND BRIDGE CONSTRUCTION
SALT LAKE CITY, UTAH

RECOMMENDED FOR APPROVAL — JAN.01,2005 DATE

CHAIRMAN STANDARDS COMMITTEE APPROVED — JAN.01,2005 DATE

DEPUTY DIRECTOR

TRAFFIC CONTROL GENERAL

STANDARD DRAWING TITLE

STD DWG

TC 2B

DGN File:N:\Esa\Standard.Drawings\Imperial\2005Approved\Traffic Control (TC)\tc02b.dgn

15-DEC-2004

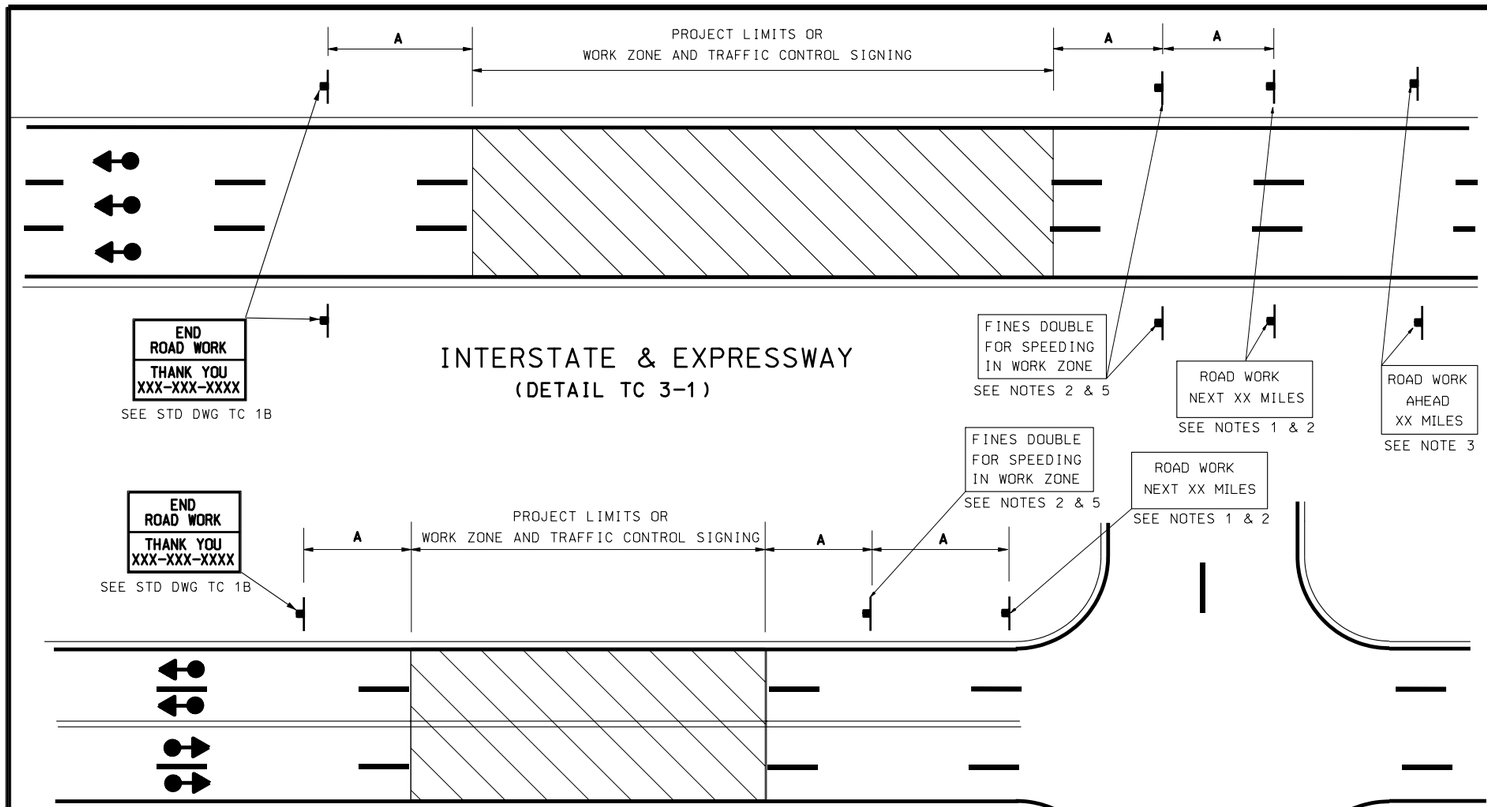

INTERSTATE & EXPRESSWAY
(DETAIL TC 3-1)

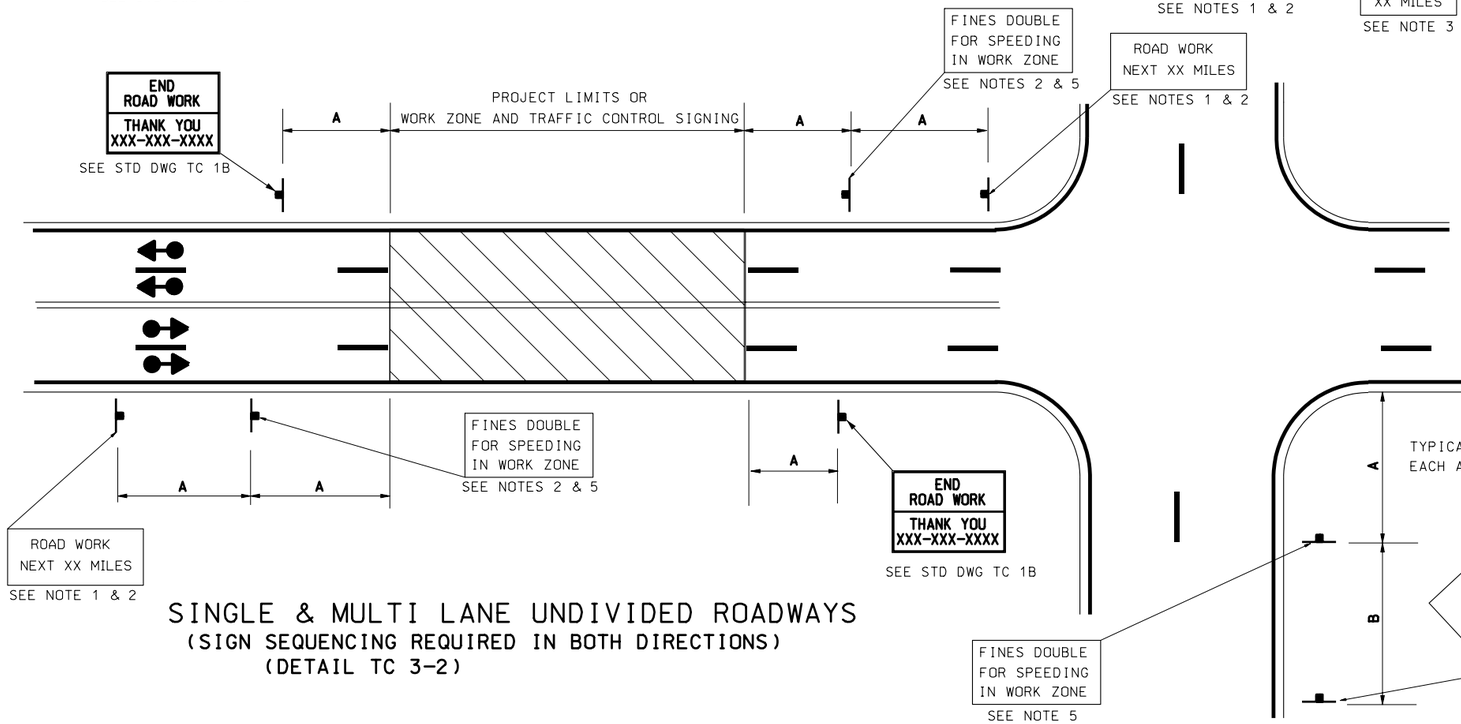

SINGLE & MULTI LANE UNDIVIDED ROADWAYS
(SIGN SEQUENCING REQUIRED IN BOTH DIRECTIONS)
(DETAIL TC 3-2)

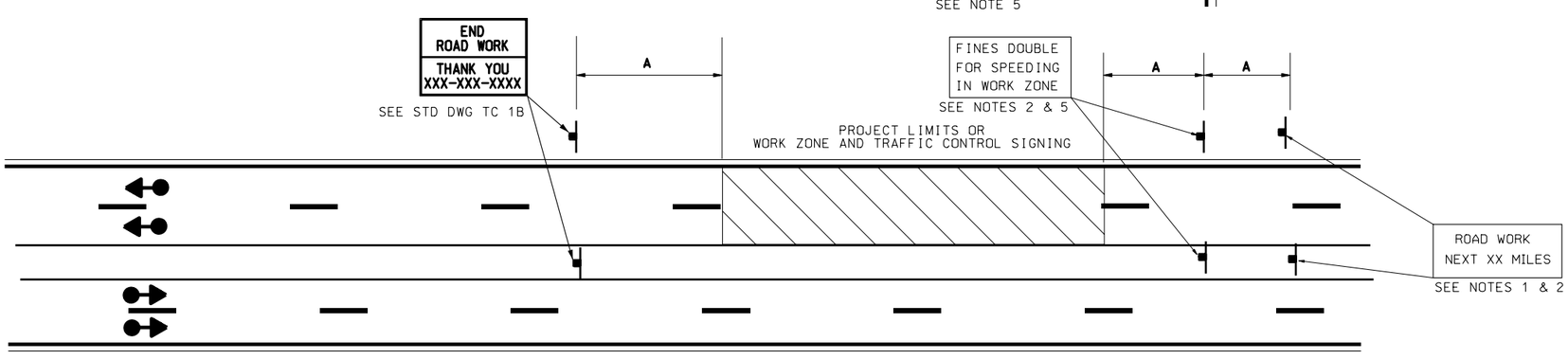

DIVIDED ROADWAYS IN URBANIZED
(DETAIL TC 3-3)

NOTES:

1. USE "ROAD WORK NEXT __ MILES" SIGN G20-1, WHEN TRAFFIC CONTROL IS GREATER THAN 2 MILES IN LENGTH.
2. PLACE " ROAD WORK AHEAD" SIGN AHEAD OF THE "FINES DOUBLE FOR SPEEDING IN WORK ZONE" SIGN WHEN THE "ROAD WORK NEXT __ MILES" IS NOT USED.
3. PLACE "ROAD WORK AHEAD __ MILES" SIGN AT ROUTE SEPARATION POINT IF AN ALTERNATE ROUTE IS AVAILABLE AND SIGNIFICANT DELAYS ARE EXPECTED.
4. USE PROJECT LIMIT SIGNING IN BOTH DIRECTIONS IF TRAFFIC CONTROL AFFECTS TRAFFIC IN BOTH DIRECTIONS.
5. "FINES DOUBLE FOR SPEEDING IN WORK ZONE" SIGN IS OPTIONAL. SEE STD DWG TC 1B.
6. WHEN REDUCED SPEEDS AND/OR "FINES DOUBLE" OPTION IS USED, "FINES DOUBLE" SIGNING AND SPEED LIMIT SIGNING ARE REQUIRED AT ALL INTERCHANGES WITHIN THE PROJECT.
7. PLACE SIGNING ON RIGHT SHOULDER AND MEDIAN WHEN CONDITIONS PERMIT.
8. SEE STD DWG TC 2B FOR TAPER, BUFFER ZONE, AND SIGN SPACING CHART.

REVISIONS

NO.	DATE	APPR.	REMARKS

UTAH DEPARTMENT OF TRANSPORTATION
STANDARD DRAWINGS FOR ROAD AND BRIDGE CONSTRUCTION
SALT LAKE CITY, UTAH

RECOMMENDED FOR APPROVAL — JAN.01,2005 DATE
CHAIRMAN STANDARDS COMMITTEE APPROVED — JAN.01,2005 DATE
DEPUTY DIRECTOR

TRAFFIC CONTROL
PROJECT LIMIT SIGNING
STANDARD DRAWING TITLE

STD DWG
TC 3

DGN File:N:\Std\Standard Drawings\Imperial\2005Approved\Traffic Control(TC)\tc03.dgn
15-DEC-2004

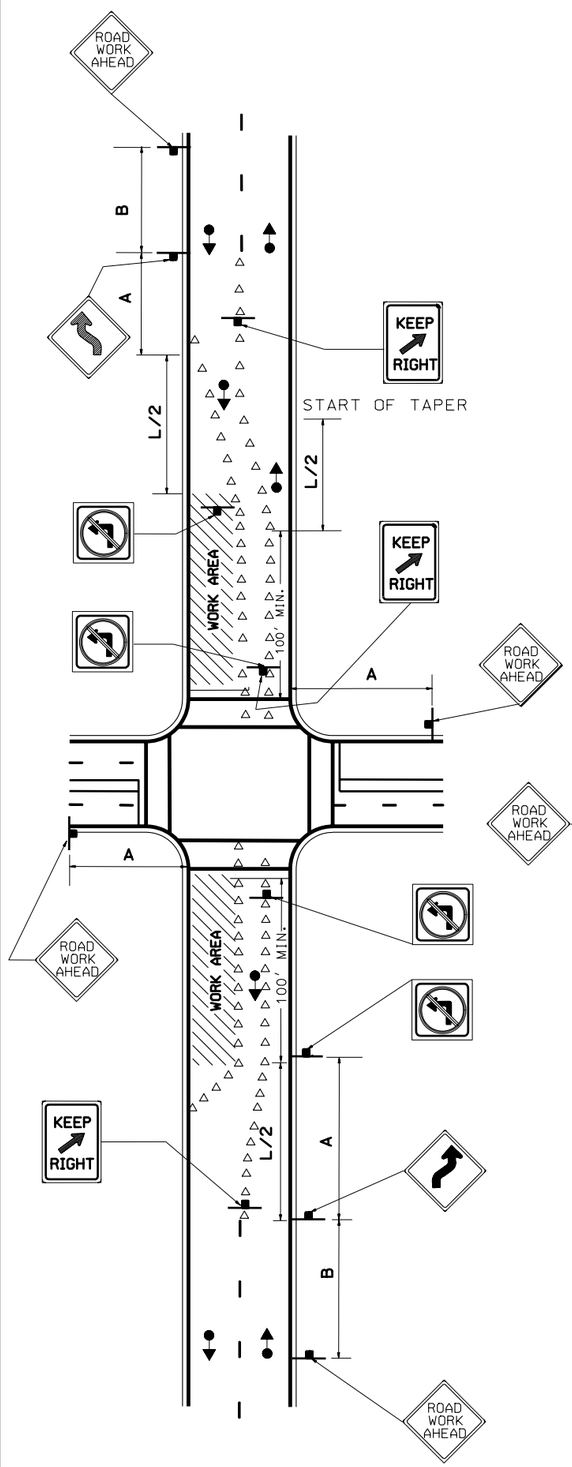

(DETAIL TC 4-1)

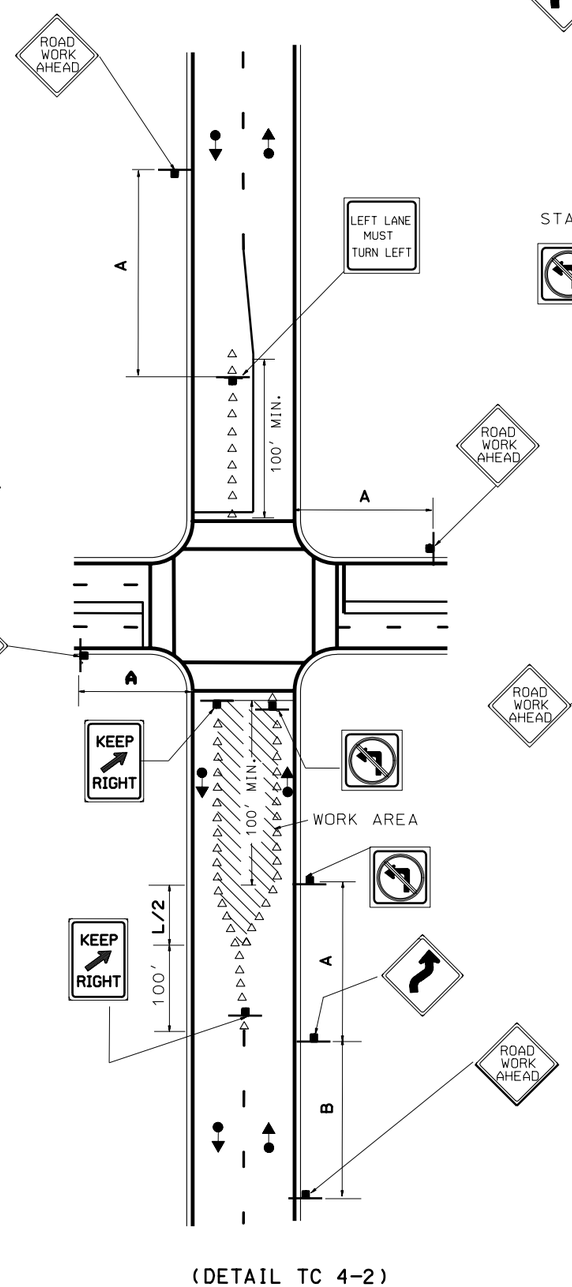

(DETAIL TC 4-2)

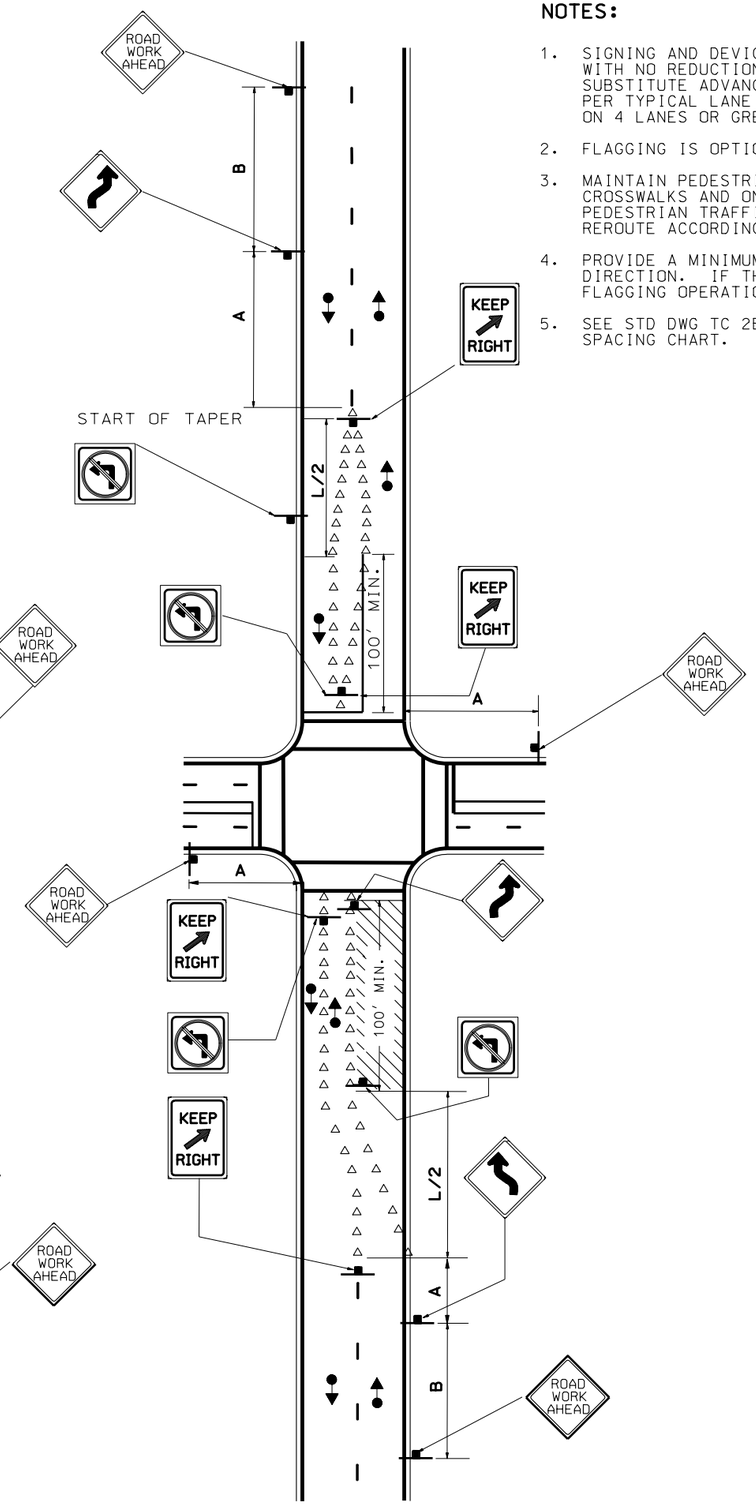

(DETAIL TC 4-3)

NOTES:

1. SIGNING AND DEVICES SHOWN FOR 2 LANE ROADWAY WITH NO REDUCTION IN NUMBER OF LANES. SUBSTITUTE ADVANCE SIGNING AND DEVICES AS PER TYPICAL LANE CLOSURE. FOR LANE REDUCTION ON 4 LANES OR GREATER SEE STD DWG TC 8 OR TC 5
2. FLAGGING IS OPTIONAL WITH LANE CLOSURE.
3. MAINTAIN PEDESTRIAN TRAFFIC AT EXISTING CROSSWALKS AND ON EXISTING SIDEWALKS. WHEN PEDESTRIAN TRAFFIC CANNOT BE MAINTAINED REROUTE ACCORDING TO STD DWG TC 6.
4. PROVIDE A MINIMUM 10' TRAFFIC LANE IN EACH DIRECTION. IF THIS CANNOT BE DONE USE A FLAGGING OPERATION AS PER STD DWG TC 14
5. SEE STD DWG TC 2B FOR TAPER, BUFFER, AND SIGN SPACING CHART.

LANE SHIFT FOR URBAN INTERSECTIONS

REVISIONS			
NO.	DATE	APPR.	REMARKS

UTAH DEPARTMENT OF TRANSPORTATION
STANDARD DRAWINGS FOR ROAD AND BRIDGE CONSTRUCTION
SALT LAKE CITY, UTAH

RECOMMENDED FOR APPROVAL — JAN.01,2005 DATE
CHAIRMAN STANDARDS COMMITTEE APPROVED — JAN.01,2005 DATE
DEPUTY DIRECTOR

TRAFFIC CONTROL
URBAN INTERSECTIONS
WITH ROADWAYS UNDER
50 MPH

STANDARD DRAWING TITLE

STD DWG
TC 4

DGN File:N:\Esd\Standard.Drawings\Imperial\2005Approved\Traffic Control (TC)\tc04.dgn
15-DEC-2004

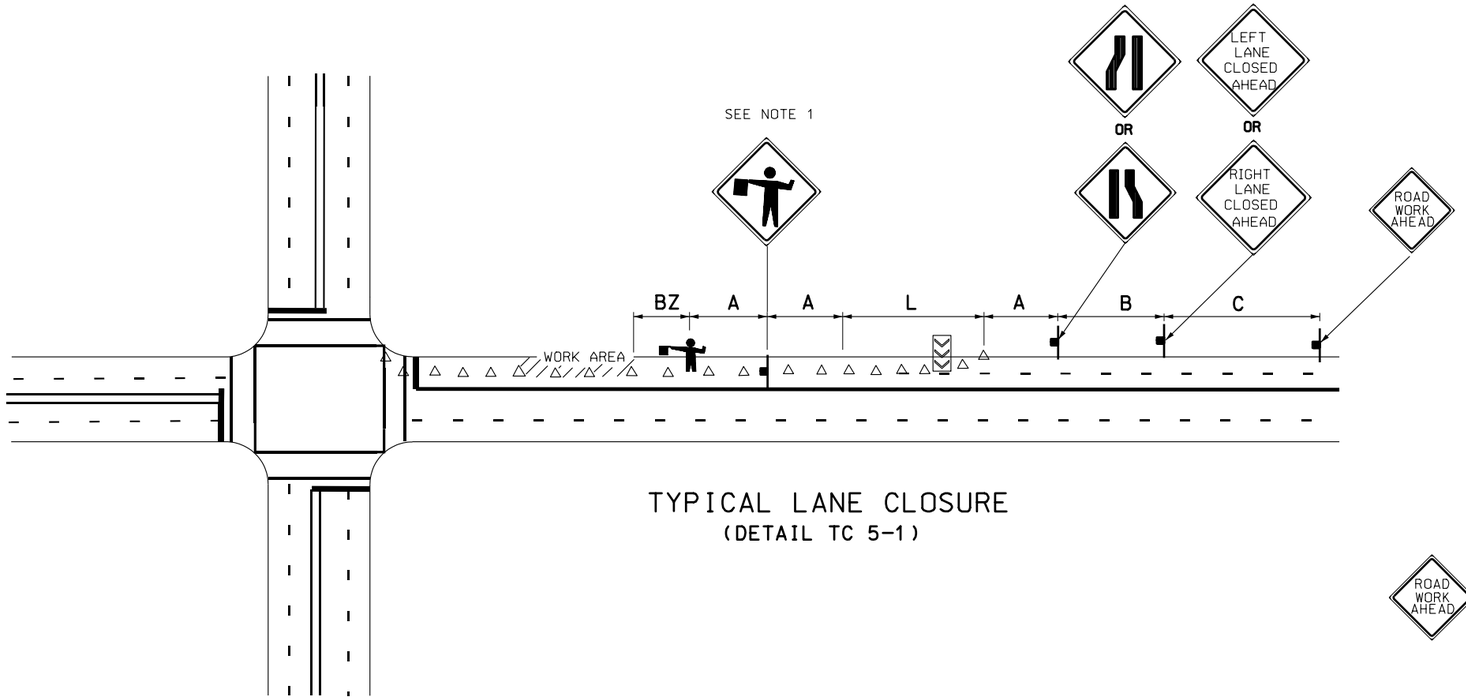

TYPICAL LANE CLOSURE
(DETAIL TC 5-1)

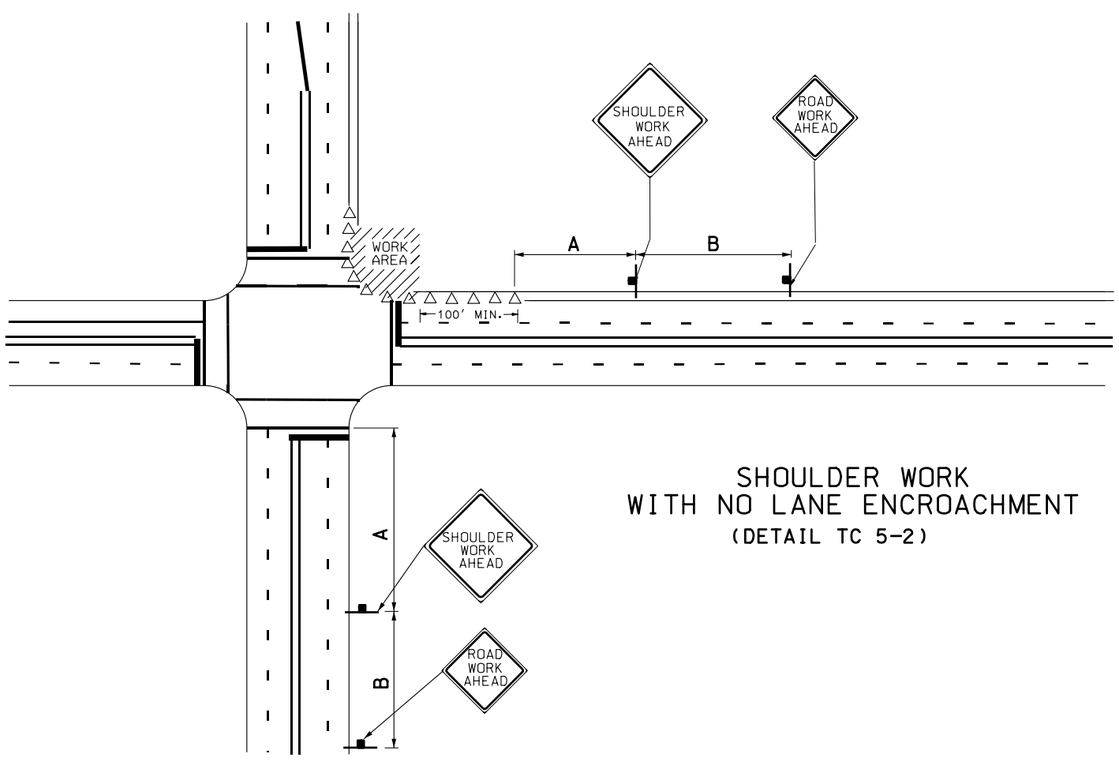

SHOULDER WORK
WITH NO LANE ENCROACHMENT
(DETAIL TC 5-2)

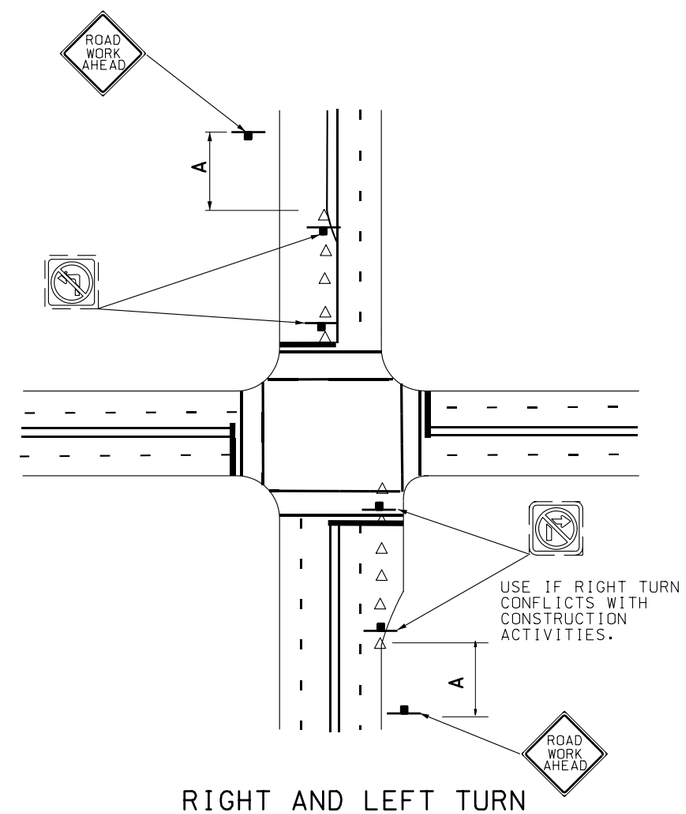

RIGHT AND LEFT TURN
LANES CLOSURE
(DETAIL TC 5-3)

NOTES:

1. FLAGGING IS OPTIONAL WITH LANE CLOSURE.
2. MAINTAIN PEDESTRIAN TRAFFIC AT EXISTING CROSSWALKS AND ON EXISTING SIDEWALKS. WHEN PEDESTRIAN TRAFFIC CANNOT BE MAINTAINED REROUTE ACCORDING TO STD DWG TC 6.
3. PROVIDE A MINIMUM 10′ TRAFFIC LANE IN EACH DIRECTION. IF THIS CANNOT BE DONE USE A FLAGGING OPERATION AS PER STD DWG TC 14.
4. SEE STD DWG TC 2B FOR TAPER, BUFFER, AND SIGN SPACING CHART.

REVISIONS

NO.	DATE	APPR.	REMARKS

UTAH DEPARTMENT OF TRANSPORTATION
STANDARD DRAWINGS FOR ROAD AND BRIDGE CONSTRUCTION
SALT LAKE CITY, UTAH

RECOMMENDED FOR APPROVAL — JAN.01,2005 DATE
CHAIRMAN STANDARDS COMMITTEE APPROVED — JAN.01,2005 DATE
DEPUTY DIRECTOR

TRAFFIC CONTROL
URBAN INTERSECTIONS
WITH ROADWAYS UNDER
50 MPH

STANDARD DRAWING TITLE

STD DWG
TC 5

DGN File:N:\Esd\Standard_Drawings\Imperial\2005Approved\Traffic Control\tc05.dgn
15-DEC-2004

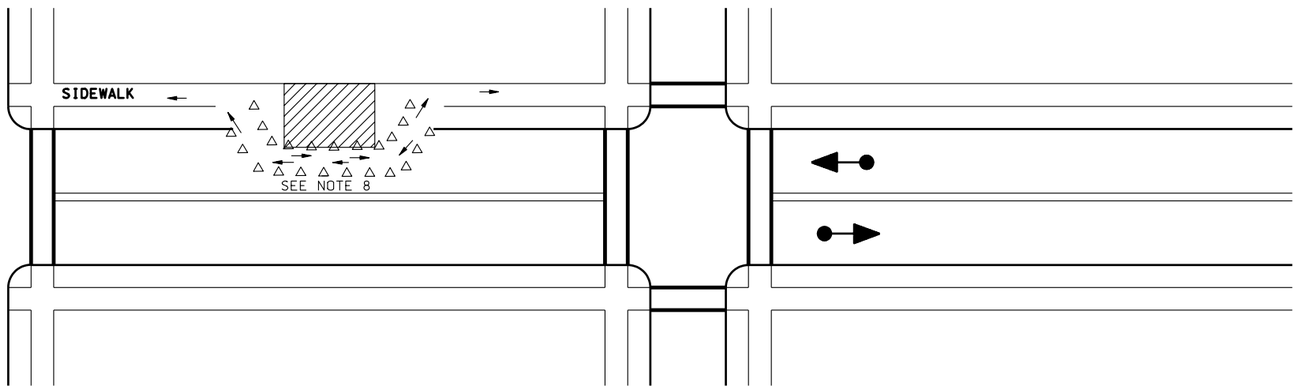

TEMPORARY WALKWAY
(DETAIL TC 6-1)
SEE NOTE 1

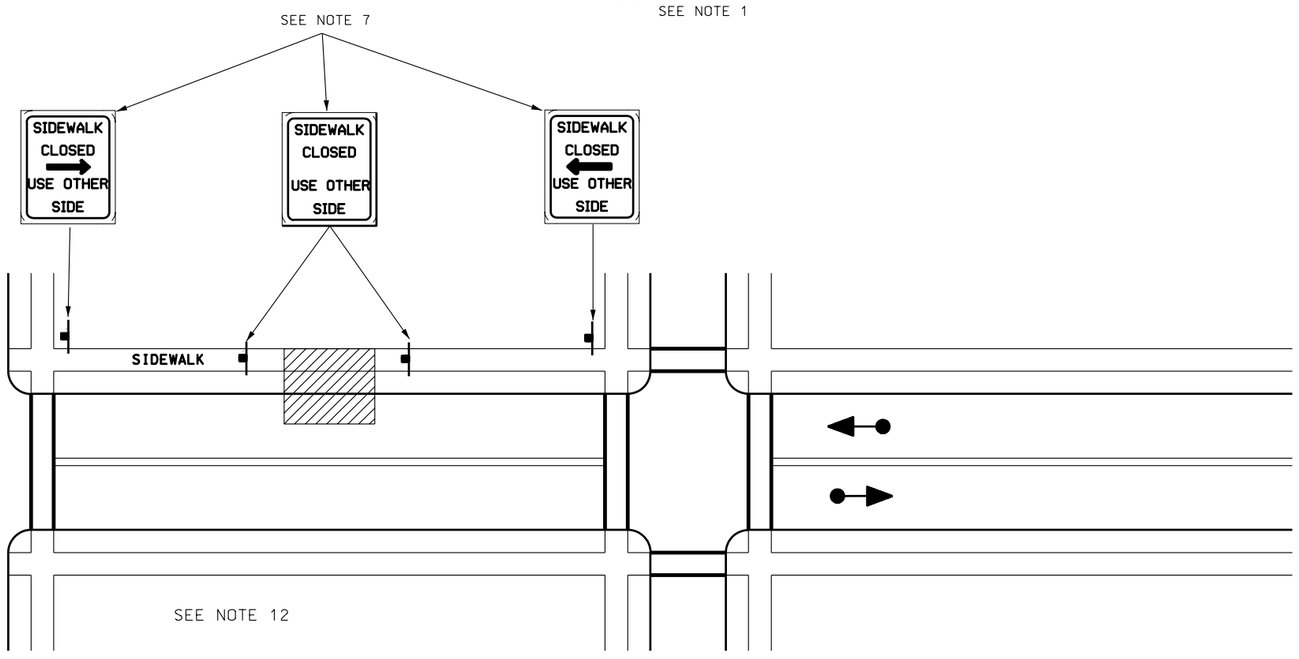

ALTERNATE ROUTE
(DETAIL TC 6-2)
SEE NOTE 1

NOTES:

1. ONLY THE TRAFFIC CONTROL DEVICES CONTROLLING PEDESTRIAN FLOWS ARE SHOWN. OTHER DEVICES ARE NEEDED TO CONTROL TRAFFIC ON THE STREET. USE LANE CLOSURE SIGNING OR ROAD NARROWS SIGNS, AS NEEDED.
2. PROVIDE A TEMPORARY WALKWAY AROUND CONSTRUCTION AREA IF WALKWAY IS CLOSED TO PEDESTRIANS. IF WALKWAY CANNOT BE PROVIDED DIRECT PEDESTRIANS TO ALTERNATE ROUTES. (SEE DETAIL TC 6-1)
3. CONSTRUCT WALKWAY A MINIMUM OF 48" WIDE AND COVER WHEN POTENTIAL OF FALLING MATERIAL EXIST.
4. CONSTRUCT WALKWAY WITH A WOOD FLOOR OR PAVED SURFACE SO THAT IT IS TRAVERSABLE BY A WHEELCHAIR.
5. WHEN SIDEWALKS EXIST ON BOTH SIDES OF STREET COMPLETE WORK ON ONE SIDE AND REOPEN PRIOR TO STARTING WORK ON THE OTHER SIDE.
6. MOUNT SIGNS 6' MINIMUM HEIGHT.
7. USE A SIGN 24" X 36" MINIMUM, SIGN LEGEND TO BE 4" MINIMUM, SERIES "C" WITH AN ARROW 4" X 12".
8. USE CHANNELIZING DEVICES SPACED 10' ON CENTER AND CONNECTED TO EACH OTHER WITH AN ORANGE, RED, OR YELLOW POLYVINYL RIBBON OR STREAMER 4" OR GREATER IN WIDTH.
9. USE A 20' CORNER RADIUS TO DEVELOP A TEMPORARY WALKWAY AROUND A CORNER.
10. DIRECT PEDESTRIANS TO AN INTERSECTION OR MARKED CROSSWALK AS AN ALTERNATE ROUTE WHEN POSSIBLE.
11. CONSULT REGION TRAFFIC ENGINEER WHEN SCHOOL ROUTING PLANS ARE AFFECTED.
12. DO NOT DIRECT PEDESTRIANS TO OPPOSITE SIDE IF SIDEWALK DOES NOT EXIST.

REVISIONS

NO.	DATE	APPR.	REMARKS

UTAH DEPARTMENT OF TRANSPORTATION
STANDARD DRAWINGS FOR ROAD AND BRIDGE CONSTRUCTION
SALT LAKE CITY, UTAH

RECOMMENDED FOR APPROVAL — JAN.01,2005 DATE
CHAIRMAN STANDARDS COMMITTEE APPROVED — JAN.01,2005 DATE
DEPUTY DIRECTOR

TRAFFIC CONTROL
PEDESTRIAN ROUTING
STANDARD DRAWING TITLE

STD DWG
TC 6

DGN File:N:\Esa\Standard_Drawings\Imperial\2005Approved\Traffic Control (TC)\tc06.dgn
15-DEC-2004

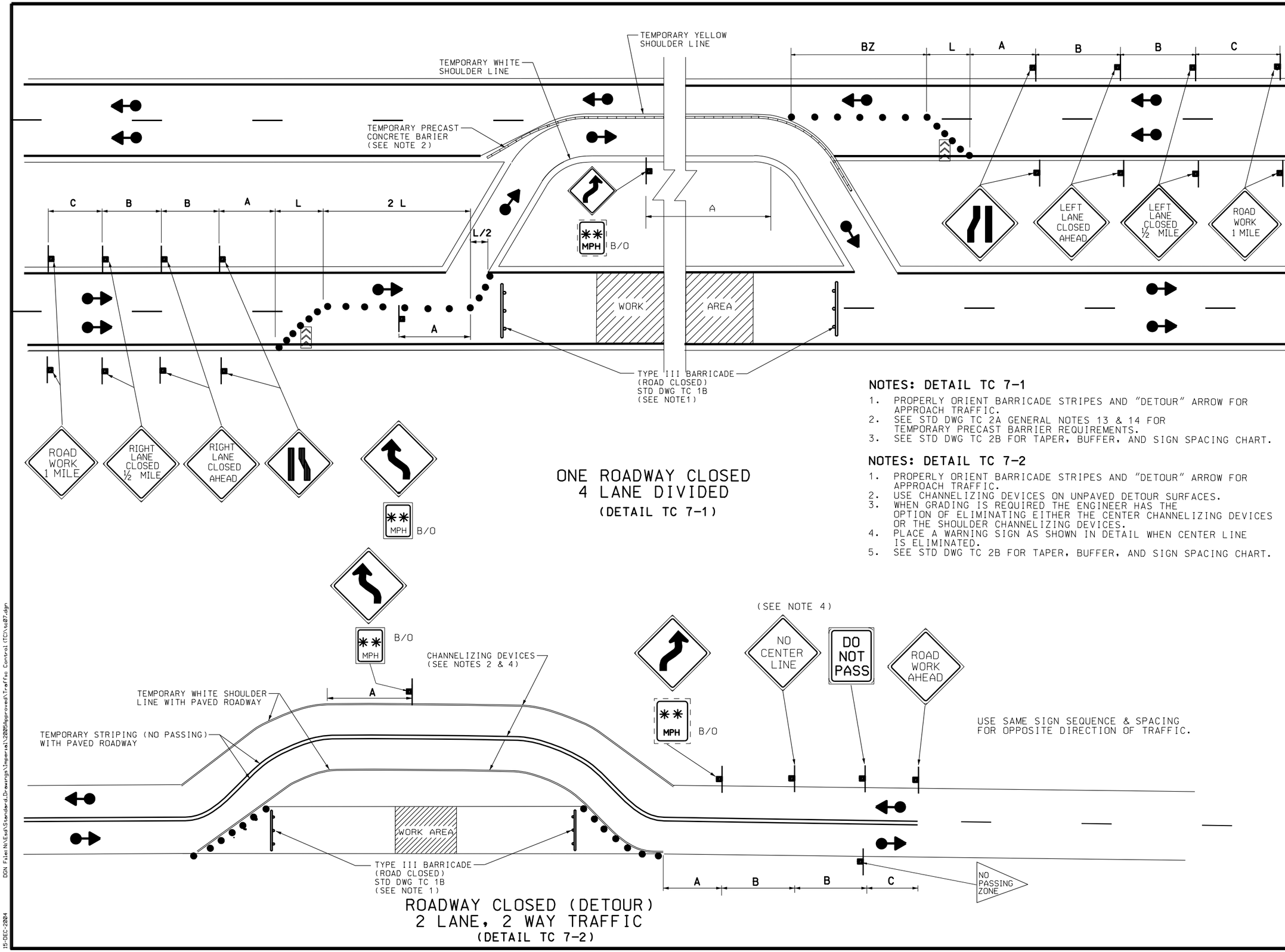

ONE ROADWAY CLOSED
4 LANE DIVIDED
(DETAIL TC 7-1)

ROADWAY CLOSED (DETOUR)
2 LANE, 2 WAY TRAFFIC
(DETAIL TC 7-2)

NOTES: DETAIL TC 7-1

1. PROPERLY ORIENT BARRICADE STRIPES AND "DETOUR" ARROW FOR APPROACH TRAFFIC.
2. SEE STD DWG TC 2A GENERAL NOTES 13 & 14 FOR TEMPORARY PRECAST BARRIER REQUIREMENTS.
3. SEE STD DWG TC 2B FOR TAPER, BUFFER, AND SIGN SPACING CHART.

NOTES: DETAIL TC 7-2

1. PROPERLY ORIENT BARRICADE STRIPES AND "DETOUR" ARROW FOR APPROACH TRAFFIC.
2. USE CHANNELIZING DEVICES ON UNPAVED DETOUR SURFACES.
3. WHEN GRADING IS REQUIRED THE ENGINEER HAS THE OPTION OF ELIMINATING EITHER THE CENTER CHANNELIZING DEVICES OR THE SHOULDER CHANNELIZING DEVICES.
4. PLACE A WARNING SIGN AS SHOWN IN DETAIL WHEN CENTER LINE IS ELIMINATED.
5. SEE STD DWG TC 2B FOR TAPER, BUFFER, AND SIGN SPACING CHART.

NO.	DATE	APPR.	REMARKS

REVISIONS

UTAH DEPARTMENT OF TRANSPORTATION
STANDARD DRAWINGS FOR ROAD AND BRIDGE CONSTRUCTION
SALT LAKE CITY, UTAH

RECOMMENDED FOR APPROVAL — JAN.01,2005 DATE
CHAIRMAN STANDARDS COMMITTEE APPROVED — JAN.01,2005 DATE
DEPUTY DIRECTOR

TRAFFIC CONTROL
ROAD CLOSED, DETOUR
STANDARD DRAWING TITLE

STD DWG
TC 7

DGN File:N:\Esd\Standard Drawings\Imperial\2005Approved\Traffic Control (TC)\tc07.dgn
15-DEC-2004

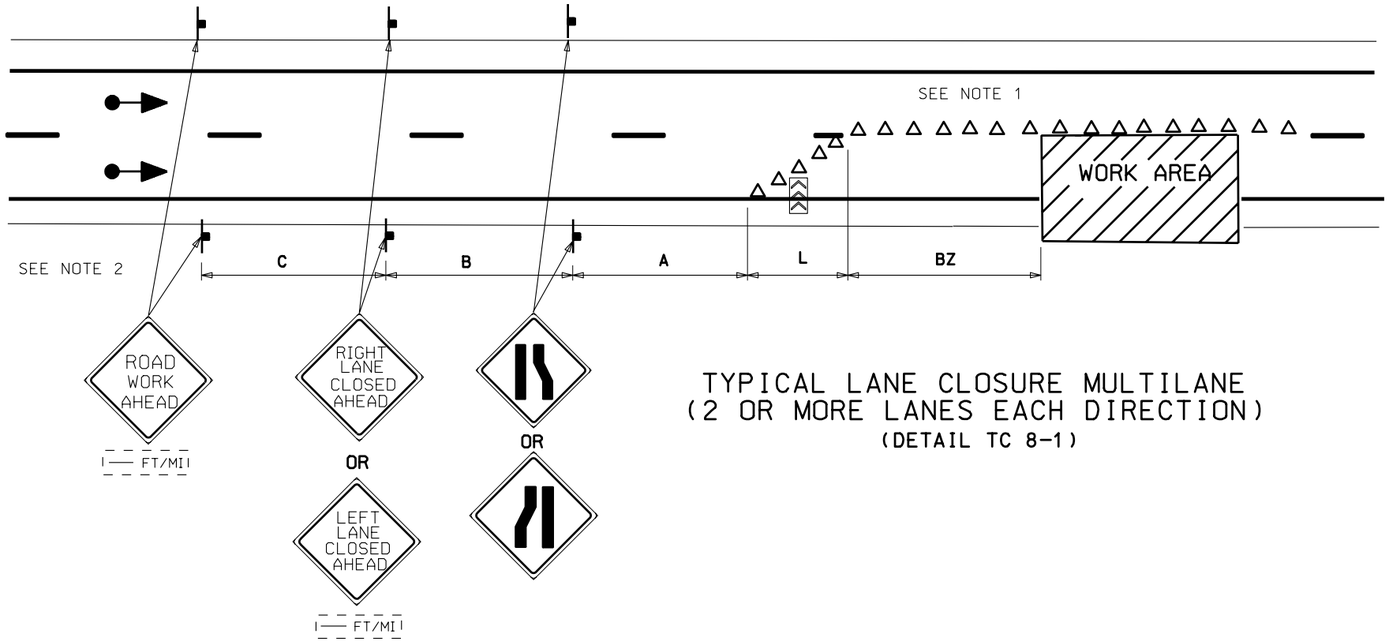

TYPICAL LANE CLOSURE MULTILANE
(2 OR MORE LANES EACH DIRECTION)
(DETAIL TC 8-1)

NOTES: DETAIL TC 8-1

1. USE PLASTIC DRUMS FOR ALL CHANNELIZING DEVICES FOR SPEEDS 50 MPH AND GREATER.
2. PLACE SIGNS IN MEDIAN/LEFT SHOULDER WHEN CONDITIONS PERMIT.
3. SEE STD DWG TC 2B FOR TAPER, BUFFER ZONE, AND SIGN SPACING CHART.

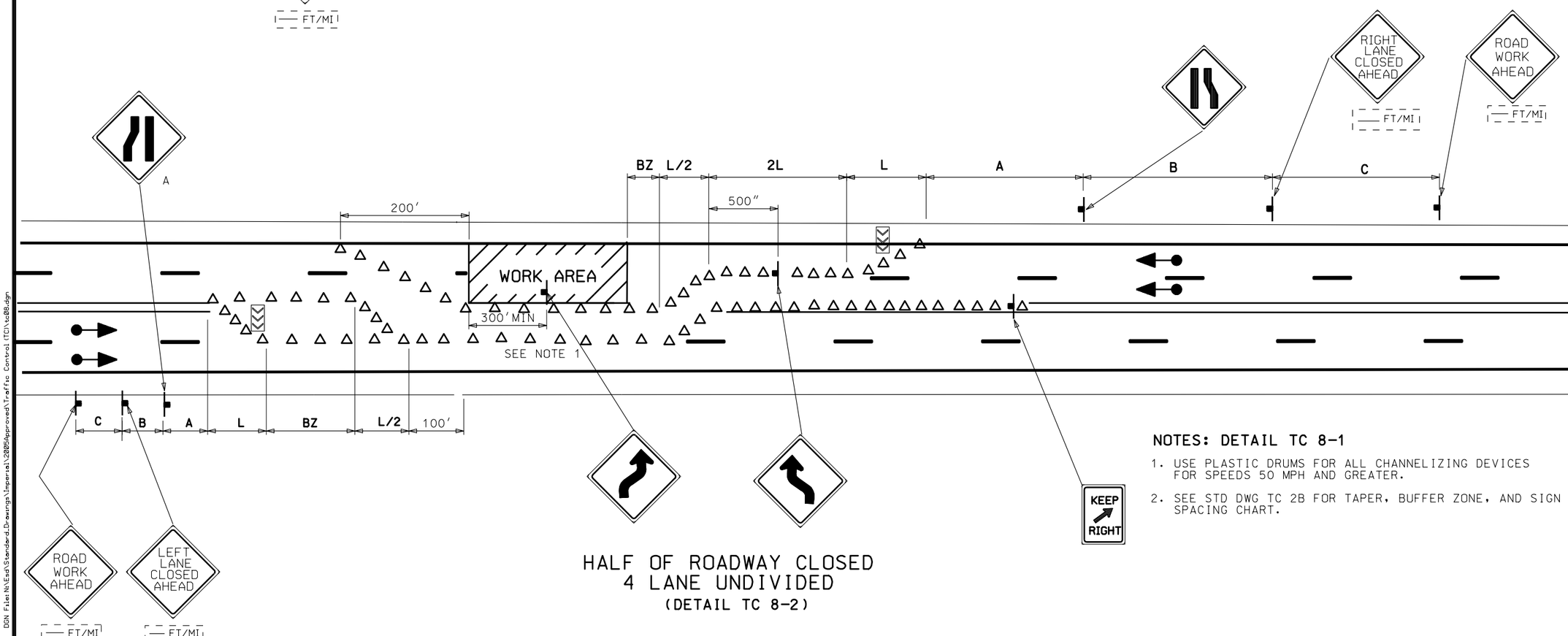

HALF OF ROADWAY CLOSED
4 LANE UNDIVIDED
(DETAIL TC 8-2)

NOTES: DETAIL TC 8-1

1. USE PLASTIC DRUMS FOR ALL CHANNELIZING DEVICES FOR SPEEDS 50 MPH AND GREATER.
2. SEE STD DWG TC 2B FOR TAPER, BUFFER ZONE, AND SIGN SPACING CHART.

NO.	DATE	APPR.	REMARKS

REVISIONS

UTAH DEPARTMENT OF TRANSPORTATION
STANDARD DRAWINGS FOR ROAD AND BRIDGE CONSTRUCTION
SALT LAKE CITY, UTAH

RECOMMENDED FOR APPROVAL — JAN.01,2005 DATE
CHAIRMAN STANDARDS COMMITTEE APPROVED — JAN.01,2005 DATE
DEPUTY DIRECTOR

TRAFFIC CONTROL
LANE CLOSURE
STANDARD DRAWING TITLE

STD DWG
TC 8

DGN File: N:\Esd\Standards\Drawings\Imperial\2005Approved\Traffic Control (TC)\tc08.dgn
15-DEC-2004

NOTE:

1. SEE STD DWG TC 2B FOR TAPER, BUFFER, AND SIGN SPACING CHART.

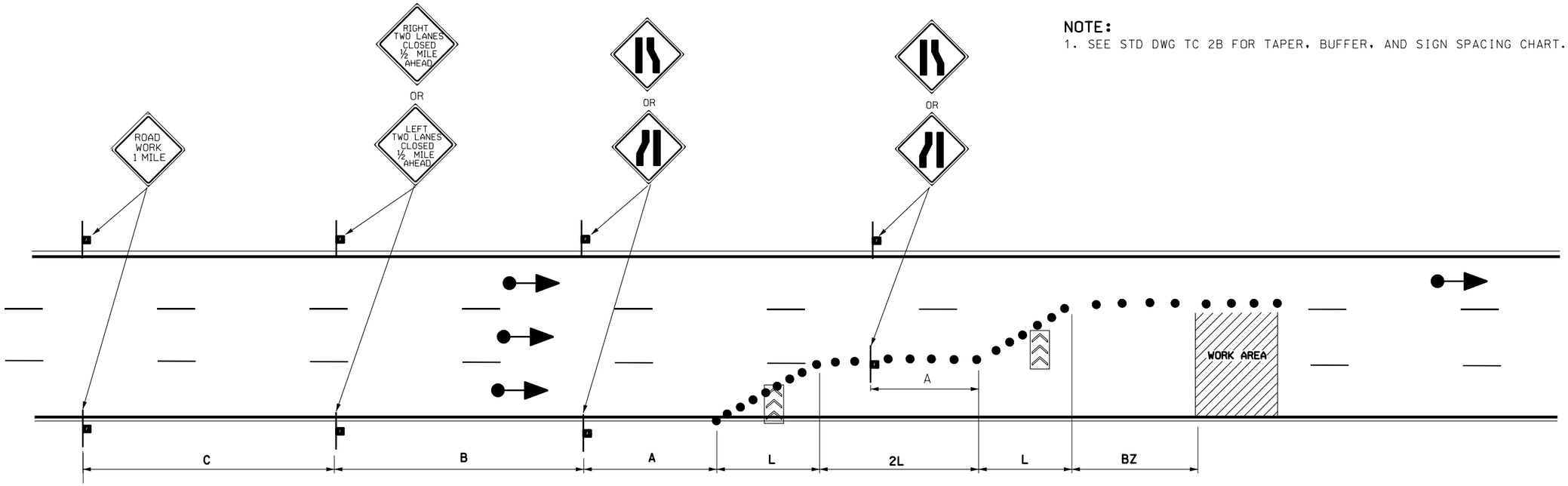

TWO LANES CLOSURE
(DETAIL TC 9-1)

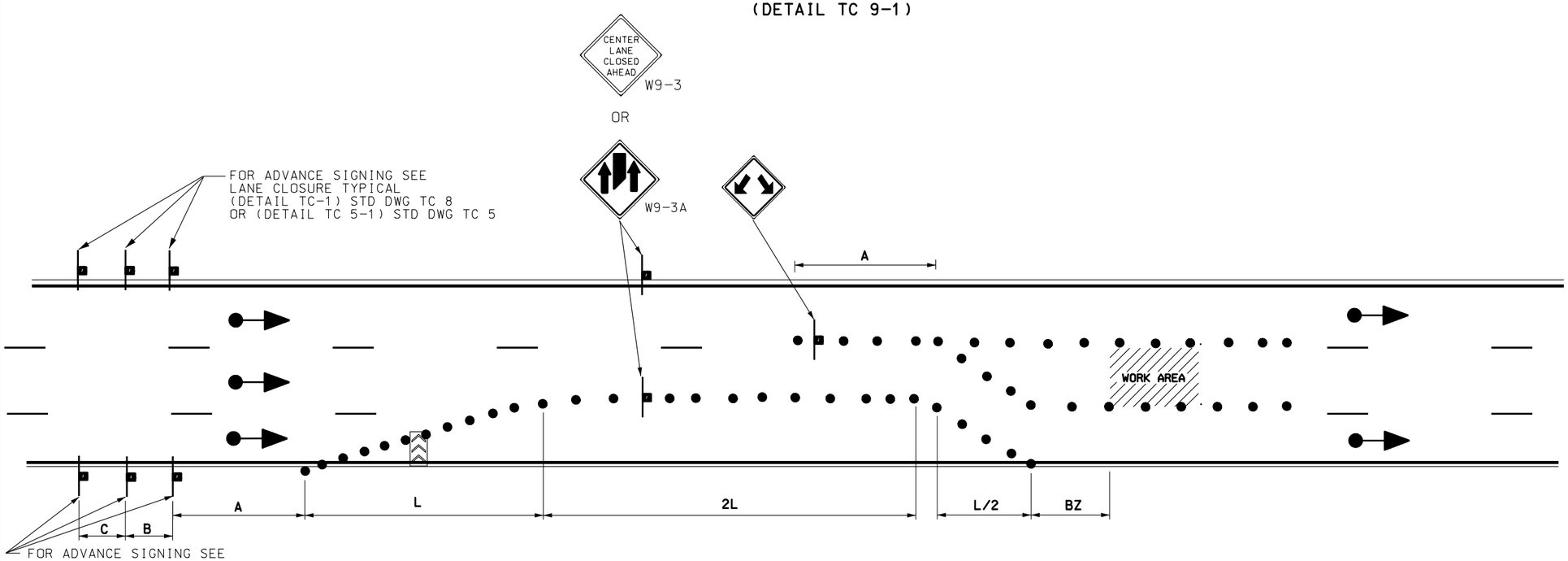

CENTER LANE CLOSURE
(DETAIL TC 9-2)

REVISIONS

NO.	DATE	APPR.	REMARKS

UTAH DEPARTMENT OF TRANSPORTATION
STANDARD DRAWINGS FOR ROAD AND BRIDGE CONSTRUCTION
SALT LAKE CITY, UTAH

RECOMMENDED FOR APPROVAL — JAN.01,2005 DATE
CHAIRMAN STANDARDS COMMITTEE APPROVED — JAN.01,2005 DATE
DEPUTY DIRECTOR

TRAFFIC CONTROL
MULTILANE CLOSURE

STANDARD DRAWING TITLE

STD DWG
TC 9

DGN File:N:\Esd\Standard Drawings\Imperial\2005Approved\Traffic Control (TC)\tc09.dgn
15-DEC-2004

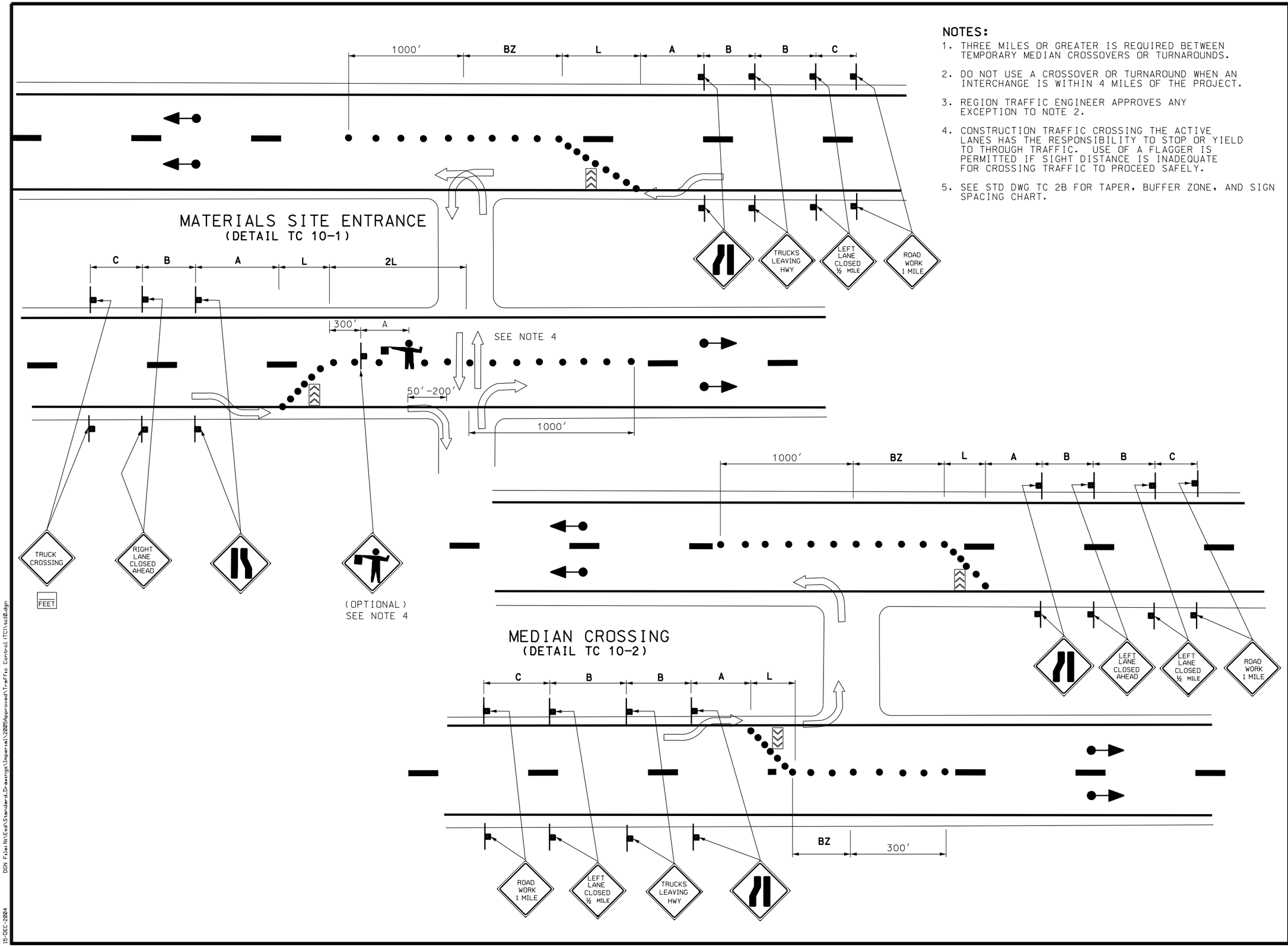

NOTES:

1. THREE MILES OR GREATER IS REQUIRED BETWEEN TEMPORARY MEDIAN CROSSOVERS OR TURNAROUNDS.
2. DO NOT USE A CROSSOVER OR TURNAROUND WHEN AN INTERCHANGE IS WITHIN 4 MILES OF THE PROJECT.
3. REGION TRAFFIC ENGINEER APPROVES ANY EXCEPTION TO NOTE 2.
4. CONSTRUCTION TRAFFIC CROSSING THE ACTIVE LANES HAS THE RESPONSIBILITY TO STOP OR YIELD TO THROUGH TRAFFIC. USE OF A FLAGGER IS PERMITTED IF SIGHT DISTANCE IS INADEQUATE FOR CROSSING TRAFFIC TO PROCEED SAFELY.
5. SEE STD DWG TC 2B FOR TAPER, BUFFER ZONE, AND SIGN SPACING CHART.

REVISIONS

NO.	DATE	APPR.	REMARKS

UTAH DEPARTMENT OF TRANSPORTATION
STANDARD DRAWINGS FOR ROAD AND BRIDGE CONSTRUCTION
SALT LAKE CITY, UTAH

RECOMMENDED FOR APPROVAL — JAN.01,2005 DATE
CHAIRMAN STANDARDS COMMITTEE APPROVED — JAN.01,2005 DATE
DEPUTY DIRECTOR

TRAFFIC CONTROL
EXPRESSWAY AND
FREEWAY CROSSOVER/
TURN AROUND

STANDARD DRAWING TITLE

STD DWG
TC 10

DGN File:N:\Esd\Standard.Drawings\Imperial\2005Approved\Traffic Control (TC)\tc10.dgn
15-DEC-2004

TRAFFIC CONTROL FOR EXIT RAMP GORE

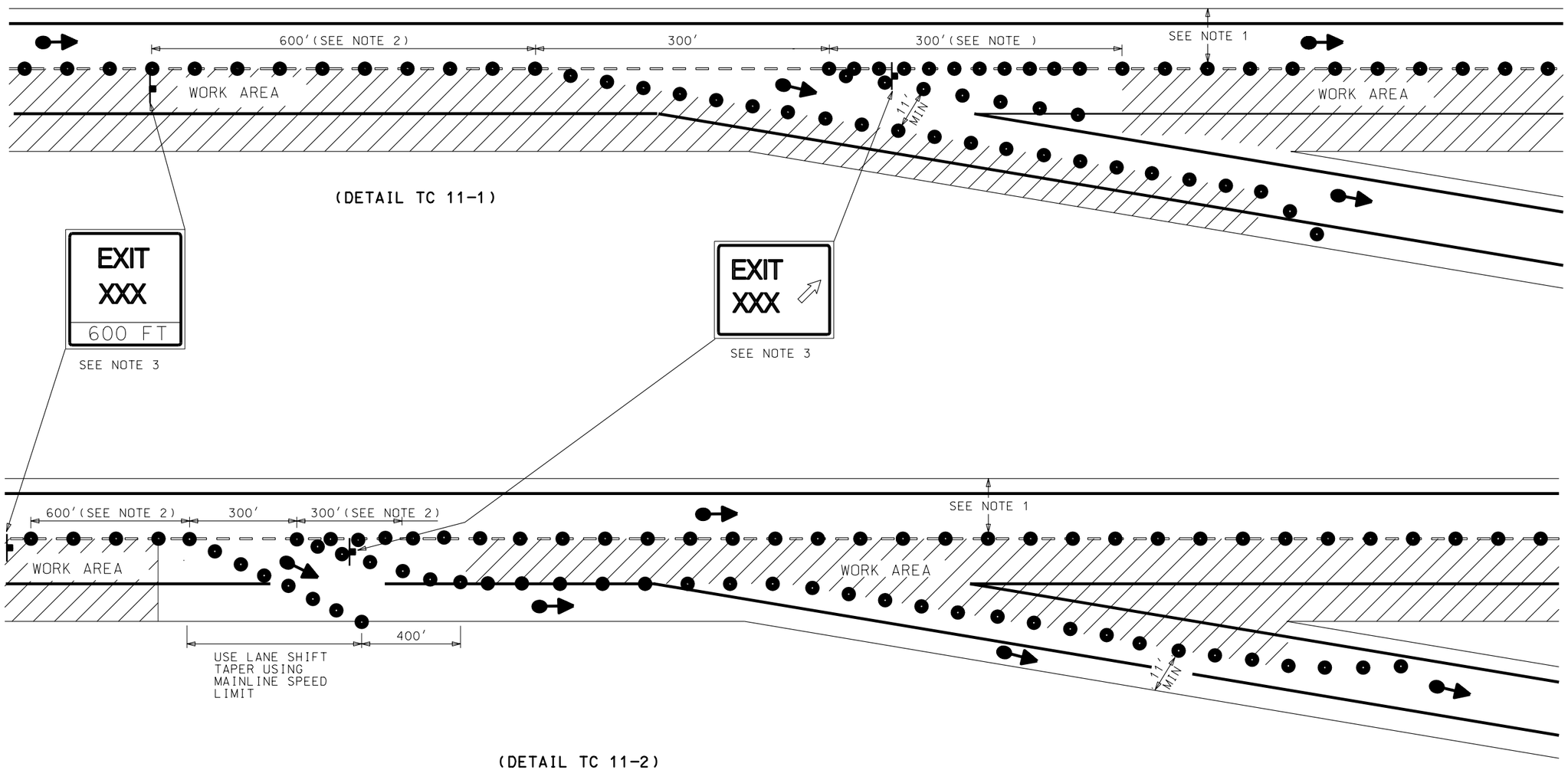

(DETAIL TC 11-1)

(DETAIL TC 11-2)

NOTES:

1. MAINTAIN 12' TRAVEL LANE AND 2' SHOULDER WIDTHS.
2. USE CHANNELIZING DEVICES SPADED AT 50'.
3. SEE STD DWG TC 1B.

REVISIONS

NO.	DATE	APPR.	REMARKS

UTAH DEPARTMENT OF TRANSPORTATION
STANDARD DRAWINGS FOR ROAD AND BRIDGE CONSTRUCTION
SALT LAKE CITY, UTAH

RECOMMENDED FOR APPROVAL — JAN.01,2005 DATE
CHAIRMAN STANDARDS COMMITTEE
APPROVED — JAN.01,2005 DATE
DEPUTY DIRECTOR

TRAFFIC CONTROL
EXIT RAMP GORE

STANDARD DRAWING TITLE

STD DWG
TC 11

DGN File:N:\Esd\Standard Drawings\Imperial\2005Approved\Traffic Control (TC)\tc11.dgn
15-DEC-2004

TRAFFIC CONTROL FOR ENTRANCE RAMP GORE

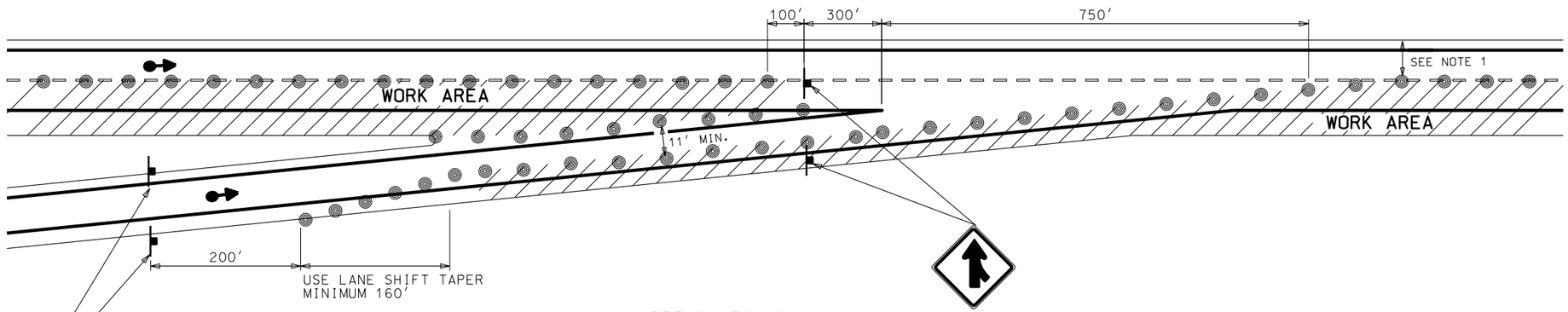

(DETAIL TC 12-1)

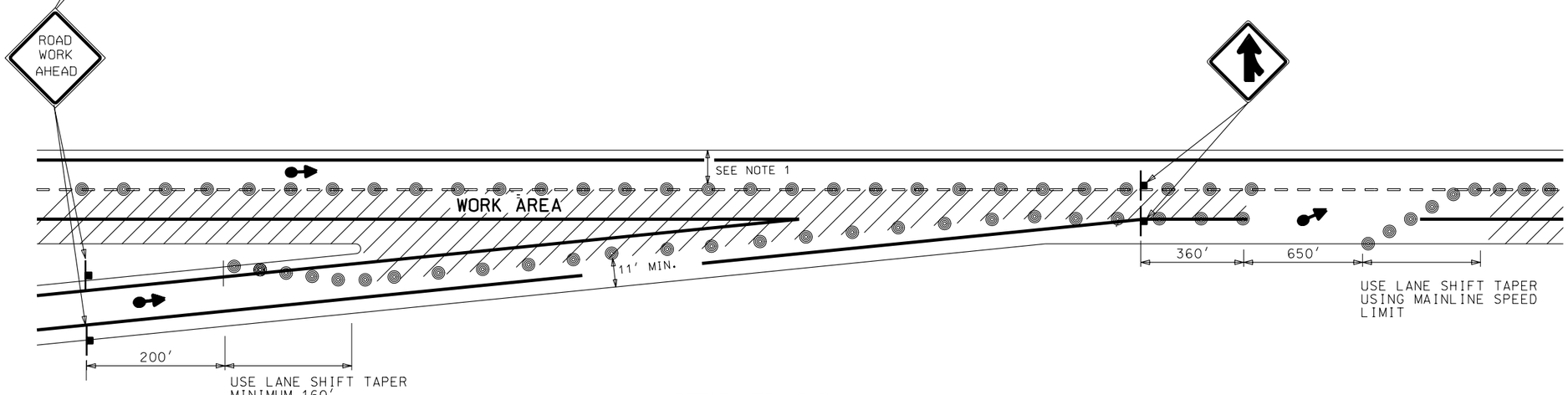

(DETAIL TC 12-2)

NOTE :

1. MAINTAIN 12' TRAVEL LANE AND 2'SHOULDER WIDTHS.

REVISIONS

NO.	DATE	APPR.	REMARKS

UTAH DEPARTMENT OF TRANSPORTATION
STANDARD DRAWINGS FOR ROAD AND BRIDGE CONSTRUCTION
SALT LAKE CITY, UTAH

RECOMMENDED FOR APPROVAL — JAN.01,2005 DATE
CHAIRMAN STANDARDS COMMITTEE APPROVED — JAN.01,2005 DATE
DEPUTY DIRECTOR

TRAFFIC CONTROL
ENTRANCE RAMP GORE

STANDARD DRAWING TITLE

STD DWG
TC 12

DGN File:N:\Esd\Standard.Drawings\Imperial\2005Approved\Traffic Control(TC)\tc12.dgn

15-DEC-2004

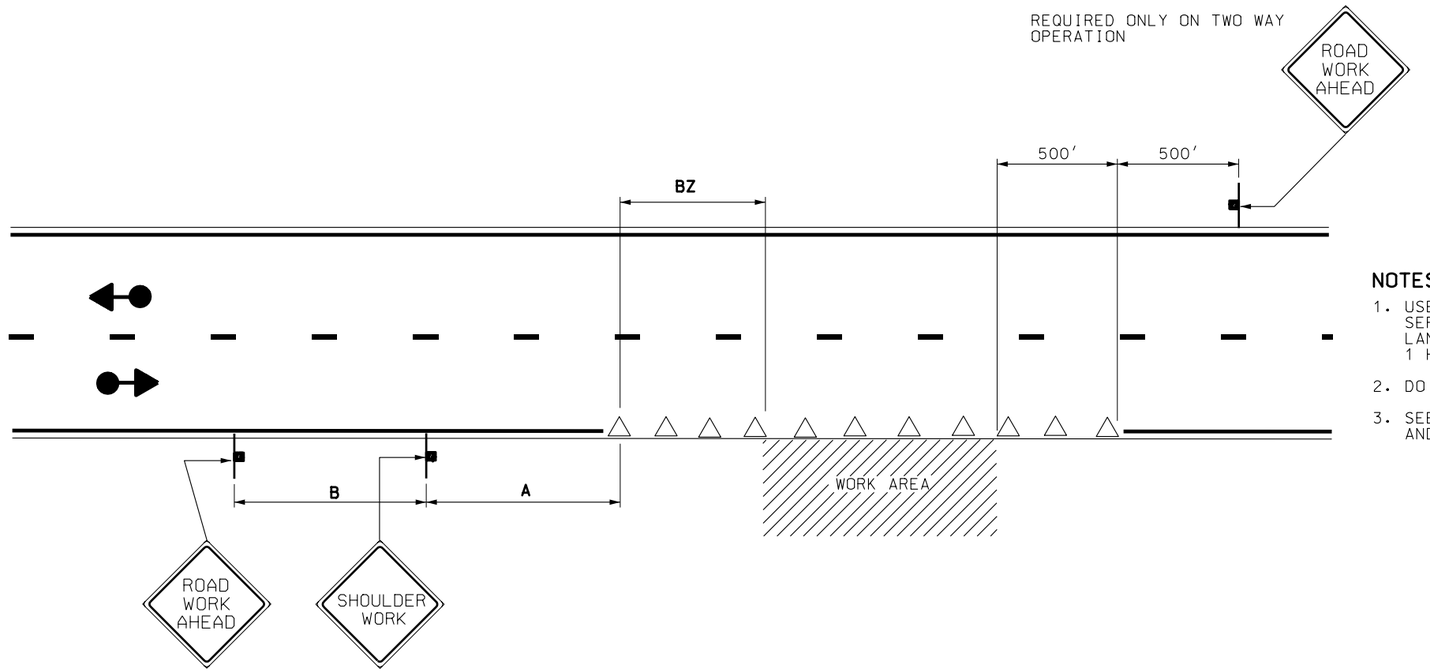

SHOULDER OPERATION
(DETAIL TC 13-1)

NOTES: DETAIL TC 13-1

1. USE CHANNELIZING DEVICES TO SEPARATE WORK ZONE FROM TRAVEL LANE WHEN WORK DURATION EXCEEDS 1 HOUR.
2. DO NOT ENCROACH INTO LANES.
3. SEE STD DWG TC 2B FOR TAPER, BUFFER, AND SIGN SPACING CHART.

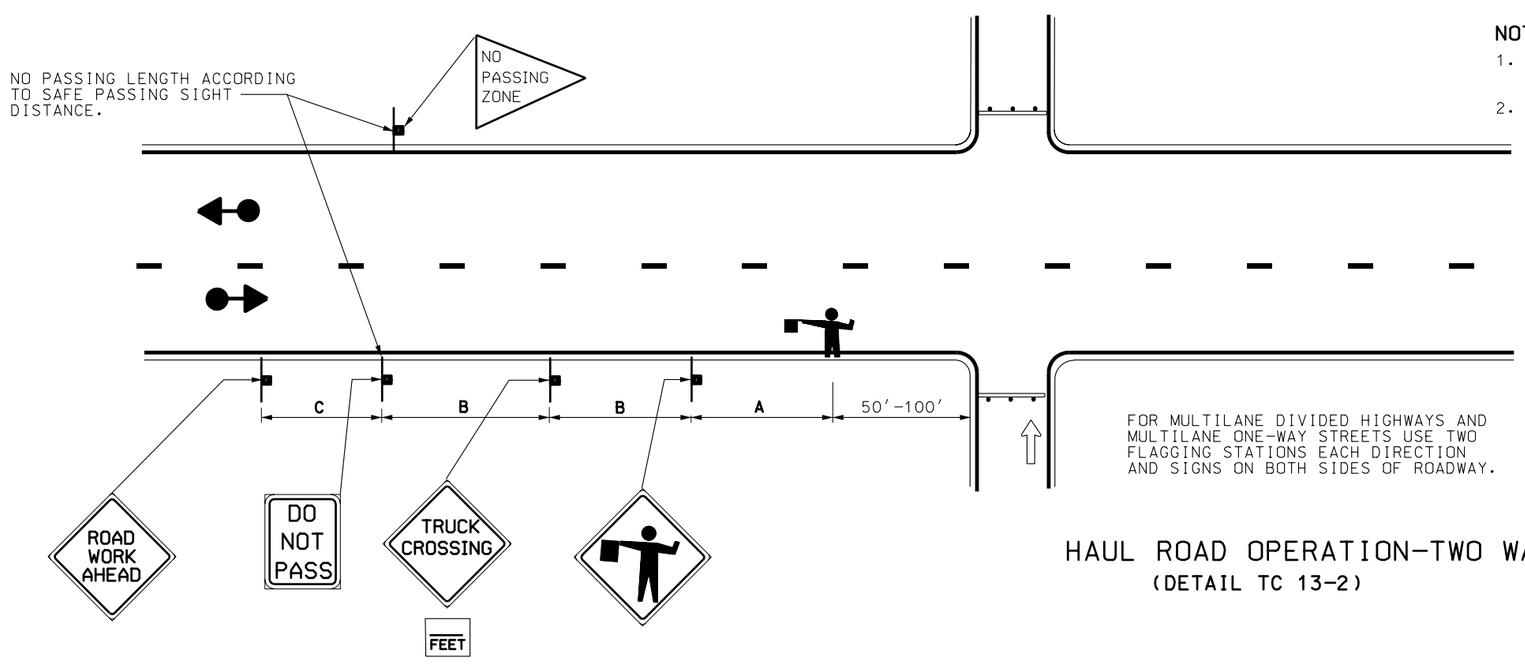

NOTES: DETAIL TC 13-2

1. INSTALL TYPE III BARRICADES WHEN HAUL ROAD IS NOT IN USE.
2. SEE STD DWG TC 2B FOR TAPER, BUFFER, AND SIGN SPACING CHART.

USE SAME SIGN SEQUENCE AND SPACING FOR OPPOSITE DIRECTION OF TRAFFIC.

FOR MULTILANE DIVIDED HIGHWAYS AND MULTILANE ONE-WAY STREETS USE TWO FLAGGING STATIONS EACH DIRECTION AND SIGNS ON BOTH SIDES OF ROADWAY.

HAUL ROAD OPERATION-TWO WAY
(DETAIL TC 13-2)

REVISIONS

NO.	DATE	APPR.	REMARKS

UTAH DEPARTMENT OF TRANSPORTATION
STANDARD DRAWINGS FOR ROAD AND BRIDGE CONSTRUCTION
SALT LAKE CITY, UTAH

RECOMMENDED FOR APPROVAL — JAN.01.2005 DATE
CHAIRMAN STANDARDS COMMITTEE APPROVED — JAN.01.2005 DATE
DEPUTY DIRECTOR

TRAFFIC CONTROL
SHOULDER-HAUL ROAD
STANDARD DRAWING TITLE

STD DWG
TC 13

DGN File: N:\Esa\Standard Drawings\Imperial\2005\Approved\Traffic Control (TC)\tc13.dgn
15-DEC-2004

NOTES:

1. USE A FLAGGER AT ALL INTERSECTING ROADWAYS. REFER TO STANDARD SPECIFICATION 01554 FOR REQUIREMENT AT OPERATING TRAFFIC SIGNALS.
2. PROVIDE FLAGGING IF TURNING TRAFFIC CONFLICTS WITH ONE WAY TRAFFIC.
3. PROVIDE A DETOUR WHEN ROAD CLOSURE EXCEEDS 24 HOURS.
4. SEE STD DWG TC 2B FOR TAPER, BUFFER ZONE, AND SIGN SPACING CHART.

USE SAME SIGN SEQUENCE, SPACING, & FLAGGER FOR OPPOSITE DIRECTION OF TRAFFIC.

USE SAME SIGN SEQUENCE, SPACING, & FLAGGER FOR OPPOSITE DIRECTION OF TRAFFIC.

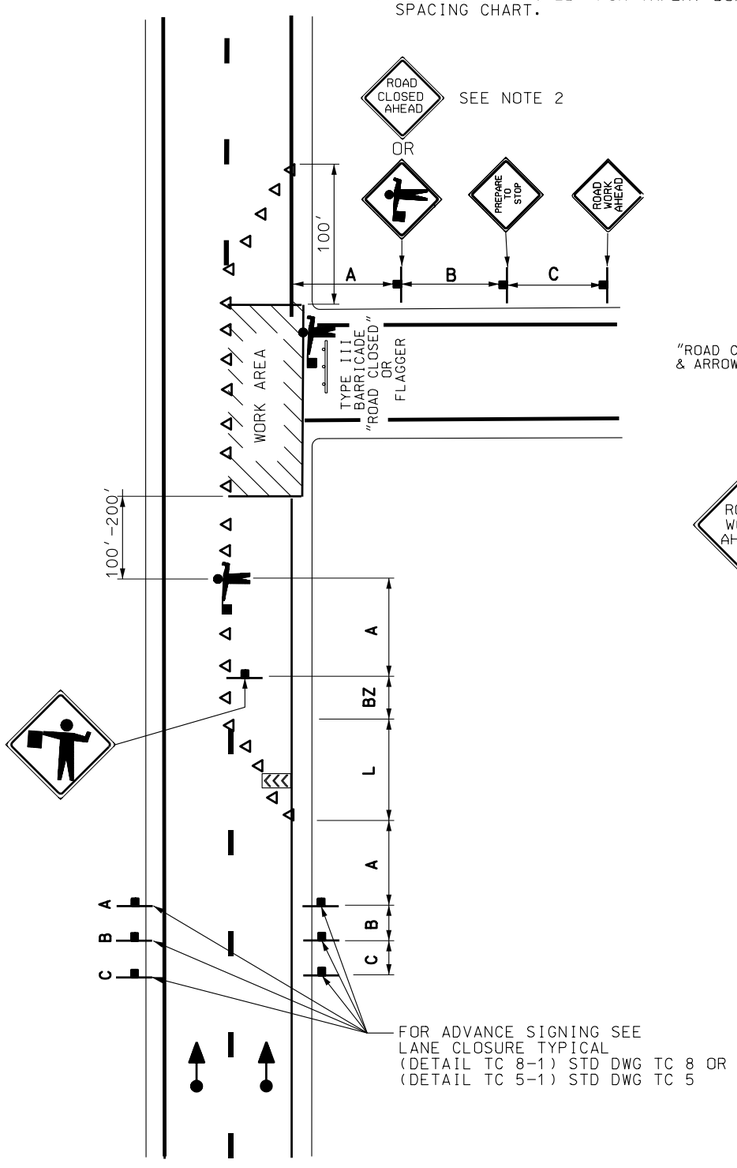

FLAGGING OPERATION – ONE WAY WITH POTENTIAL ENCROACHMENT BY WORK VEHICLE

(DETAIL TC 14-1)

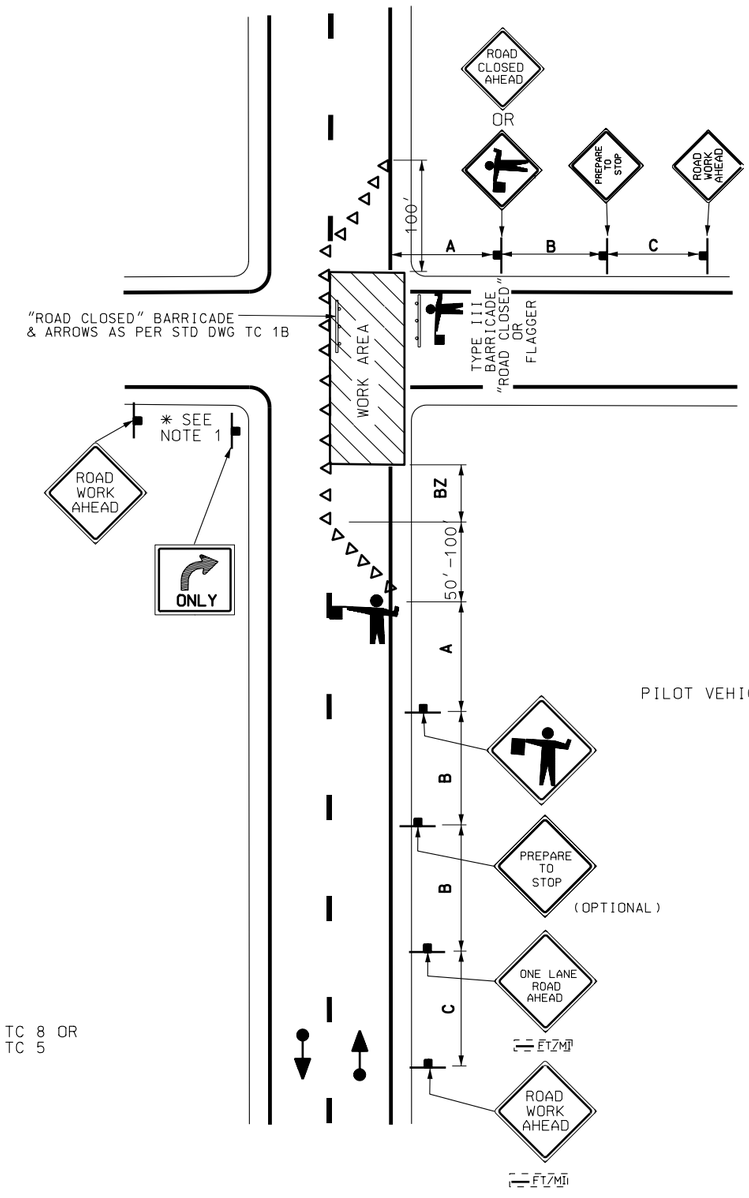

FLAGGING OPERATION – TWO WAY WITH ONE LANE CLOSED

(DETAIL TC 14-2)

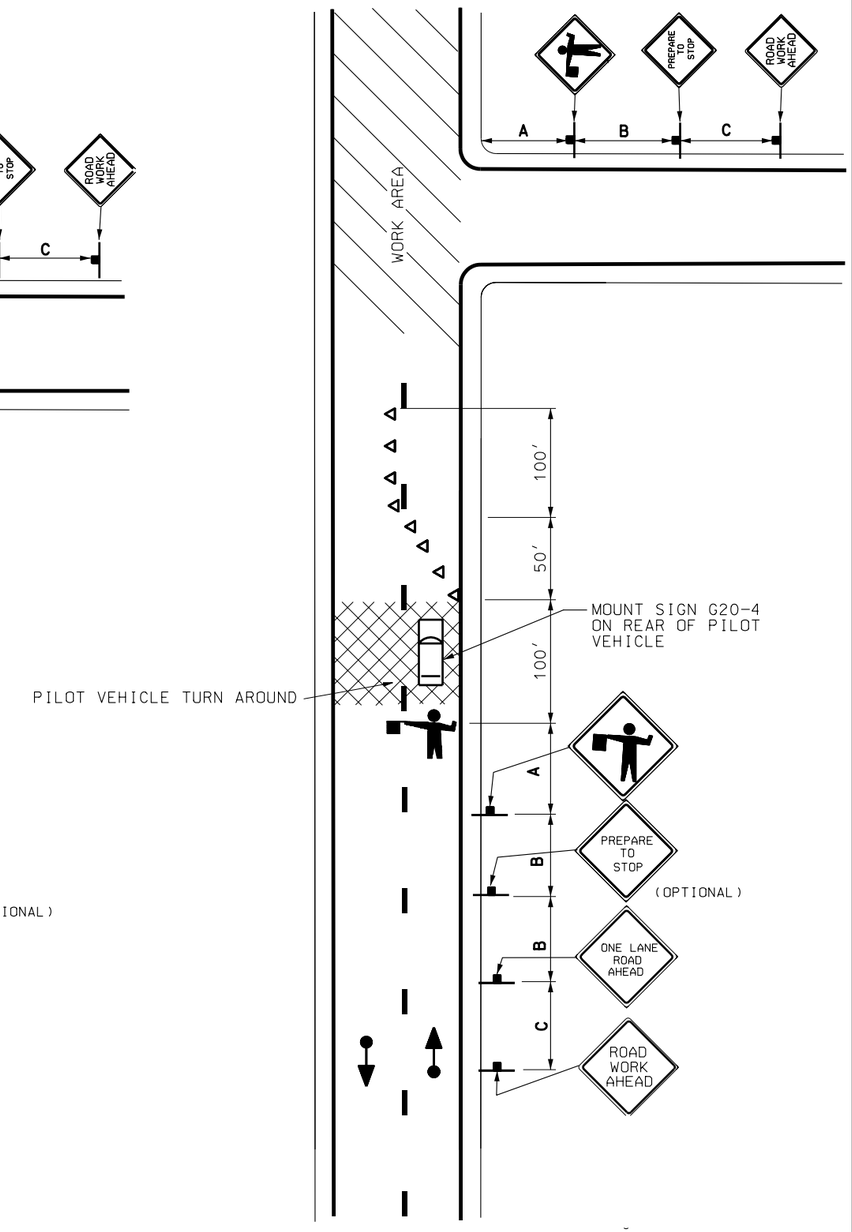

FLAGGING OPERATIONS WITH USE OF PILOT VEHICLE

(DETAIL TC 14-3)

REVISIONS

NO.	DATE	APPR.	REMARKS

UTAH DEPARTMENT OF TRANSPORTATION

STANDARD DRAWINGS FOR ROAD AND BRIDGE CONSTRUCTION

RECOMMENDED FOR APPROVAL — JAN.01.2005 DATE

CHAIRMAN STANDARDS COMMITTEE APPROVED — JAN.01.2005 DATE

DEPUTY DIRECTOR

TRAFFIC CONTROL FLAGGING OPERATION

STANDARD DRAWING TITLE

STD DWG TC 14

DGN File: N:\Esa\Standard_Drawings\Imperial\2005Approved\Traffic Control (TC)\tc14.dgn

15-DEC-2004

PROJECT SIGNING
2 LANE-2 WAY

SAME SEQUENCE AND SPACING REQUIRED FOR OPPOSITE DIRECTION OF TRAFFIC.

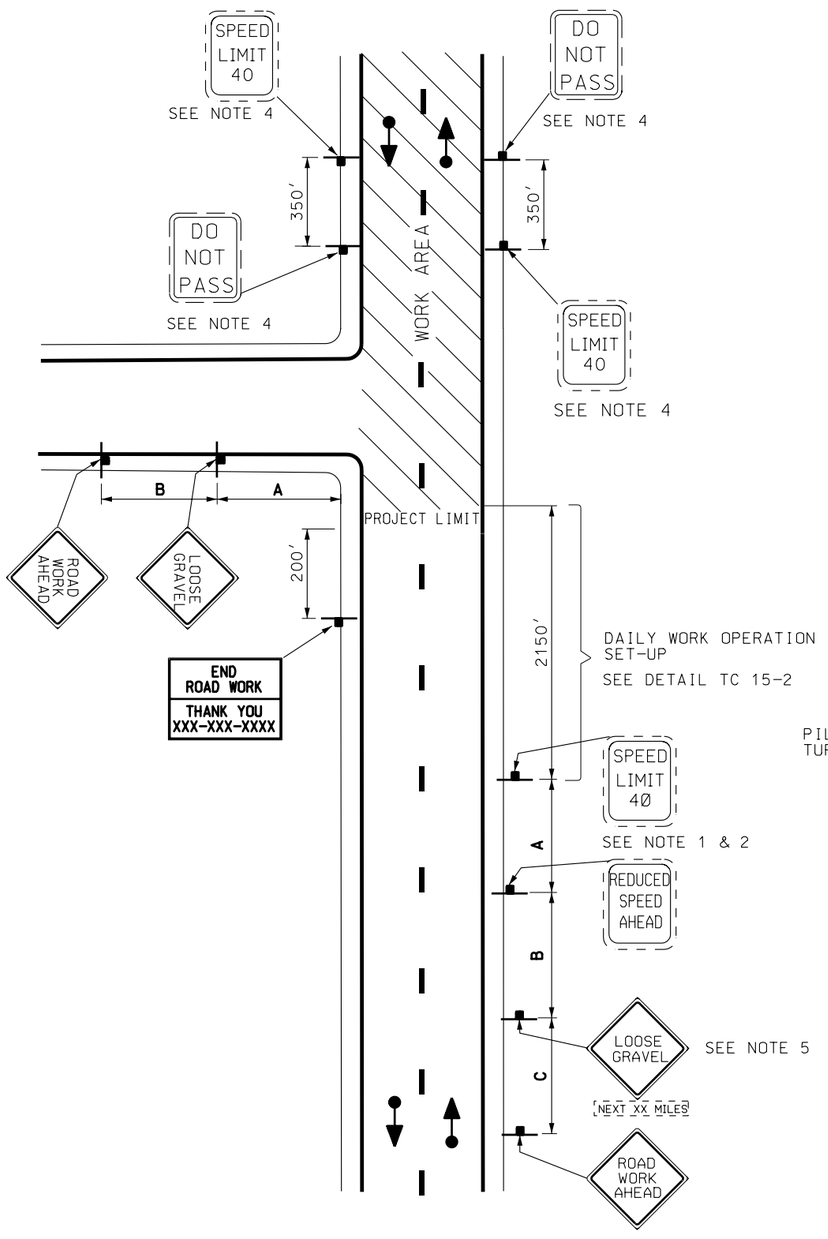

(DETAIL TC 15-1)

DAILY WORK OPERATION
2 LANE-2 WAY

SAME SIGN SEQUENCE, SPACING AND FLAGGER REQUIRED FOR OPPOSITE DIRECTION OF TRAFFIC.

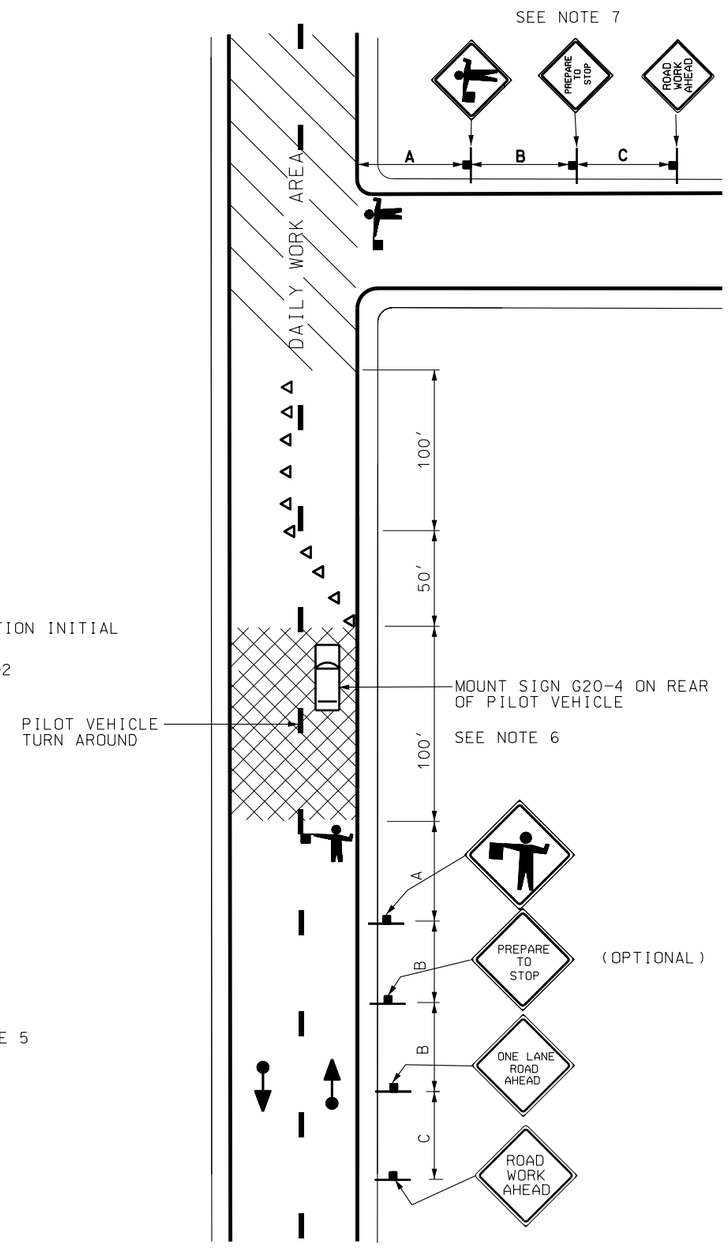

FLAGGING/PILOT VEHICLE OPERATION
(DETAIL TC 15-2)

NOTES:

1. ESTABLISH A REDUCED SPEED LIMIT OF 40 MPH FOR SEAL COAT AND COVER MATERIAL OPERATIONS WHEN SPEEDS ARE GREATER THAN 40 MPH.
2. "REDUCED SPEED AHEAD" AND "SPEED LIMIT" SIGNING NOT REQUIRED WHEN EXISTING SPEED LIMITS ARE 40 MPH OR LESS.
3. MOVE DAILY WORK OPERATION SIGNING, DETAIL TC 15-2, AS WORK PROGRESSES.
4. PLACE "DO NOT PASS" AND "SPEED LIMIT" SIGNS AT 1 MILE INTERVALS THROUGH THE PROJECT AND AT MAJOR INTERSECTIONS.
5. PLACE "LOOSE GRAVEL" SIGN WITH APPROPRIATE DISTANCE MESSAGE ½ WAY THROUGH THE PROJECT IF PROJECT LENGTH IS BETWEEN 5 MILES AND 10 MILES. REPEAT EVERY 4 MILES ON LONGER PROJECTS.
6. PILOT VEHICLE NOT TO EXCEED SPEED OF 25 MPH.
7. USE A FLAGGER AT ALL INTERSECTING ROADWAYS DURING DAILY WORK OPERATIONS. REFER TO STANDARD SPECIFICATION 01554 FOR REQUIREMENTS AT OPERATING TRAFFIC SIGNALS.
8. CONTINUE FLAGGING AND PILOT VEHICLE OPERATIONS UNTIL THE ENGINEER OR THEIR REPRESENTATIVE ALLOWS FREE FLOW TRAFFIC TO PROCEED.
9. SEE STD DWG TC 2B FOR TAPER, BUFFER, AND SIGN SPACING CHART.

REVISIONS

NO.	DATE	APPR.	REMARKS

UTAH DEPARTMENT OF TRANSPORTATION
STANDARD DRAWINGS FOR ROAD AND BRIDGE CONSTRUCTION
SALT LAKE CITY, UTAH

RECOMMENDED FOR APPROVAL — JAN.01,2005 DATE
CHAIRMAN STANDARDS COMMITTEE APPROVED — JAN.01,2005 DATE
DEPUTY DIRECTOR

TRAFFIC CONTROL
2 LANE/ 2 WAY
SEAL COAT WITH
COVER MATERIAL

STANDARD DRAWING TITLE

STD DWG
TC 15

DGN File:N:\Esd\Standard_Drawings\Imperial\2005Approved\Traffic Control(TC)\tc15.dgn
15-DEC-2004

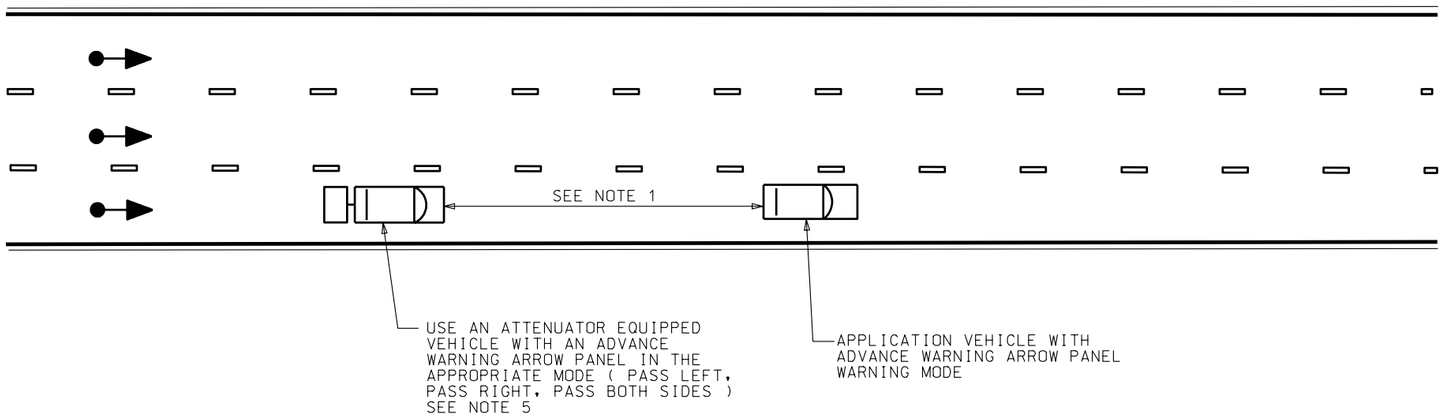

MULTILANE
LANE LINES & SHOULDER
(DETAIL TC 16-1)

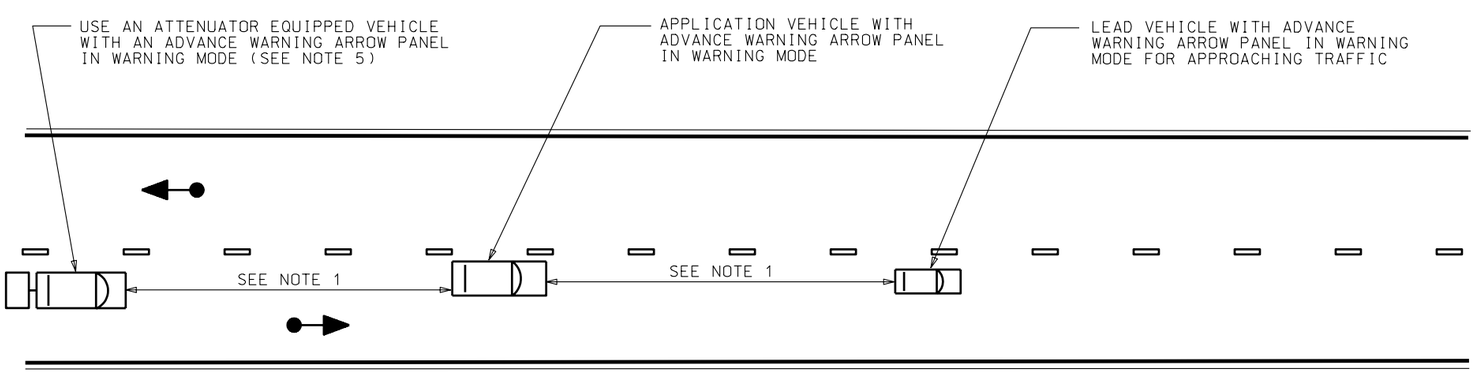

TWO LANE-TWO WAY
CENTER & SHOULDER
(DETAIL TC 16-2)

NOTES:

1. DO NOT EXCEED 300' SPACING BETWEEN THE APPLICATING TRUCK AND THE FOLLOW OR LEAD VEHICLE.
2. NO STATIC SIGNS ARE REQUIRED WITH THESE OPERATIONS.
3. ALL EQUIPMENT TO HAVE ROTARY STROBE LIGHTS AND EMERGENCY FLASHERS IN OPERATION.
4. USE TYPE B ADVANCED WARNING ARROW PANEL. SEE STD DWG TC 1A.
5. USE NCHRP-350 APPROVED TRUCK MOUNTED ATTENUATOR (TMA) MEETING THE REQUIREMENTS FOR THE POSTED SPEED LIMIT.

   TL-2 RATED SYSTEM FOR SPEEDS 45 ≤ MPH,
   TL-3 RATED SYSTEM FOR SPEEDS 50 ≥ MPH.

REVISIONS

NO.	DATE	APPR.	REMARKS

UTAH DEPARTMENT OF TRANSPORTATION
STANDARD DRAWINGS FOR ROAD AND BRIDGE CONSTRUCTION
SALT LAKE CITY, UTAH

RECOMMENDED FOR APPROVAL — JAN.01,2005 DATE
CHAIRMAN STANDARDS COMMITTEE
APPROVED — JAN.01,2005 DATE
DEPUTY DIRECTOR

TRAFFIC CONTROL
PAVEMENT MARKING
STANDARD DRAWING TITLE

STD DWG
TC 16

DGN File:N:\Esd\Standard.Drawings\Imperial\2005Approved\Traffic Control (TC)\tc16.dgn
15-DEC-2004

2005 STANDARD DRAWINGS

END OF DRAWING BOOK PART 6