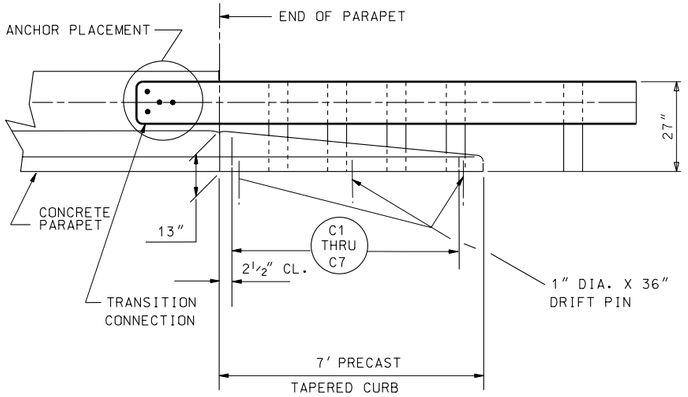

ELEVATION

(RIGHT SIDE SHOWN LEFT SIDE SIMILAR)

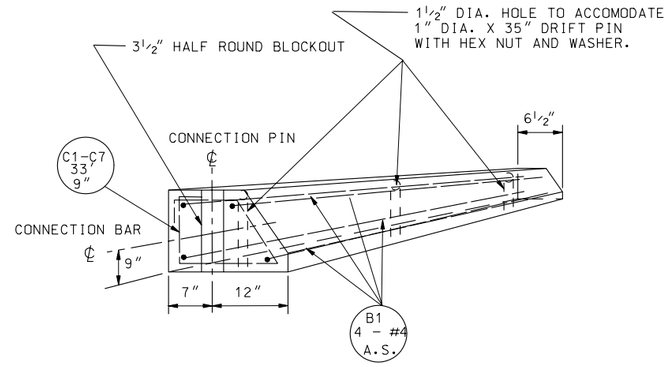

REBAR PLACEMENT

FOR PRECAST CONCRETE TAPERED CURB SECTION

REINFORCING STEEL SCHEDULE

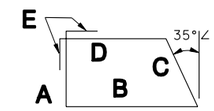

TYPE I

(FOR 1 SECTION ONLY)

BENT BARS

(ALL DIMENSIONS ARE OUT TO OUT)

MARK	SIZE	NO.	TYPE	LENGTH	A	B	C	D	E
C1	#3	1	1	4'2"	9"	14½"	11"	9"	3½"
C2				3'10"	8"	13½"	10"	8"	
C3				3'6½"	7"	12½"	9"	8"	
C4				3'2"	6"	11"	8"	7"	
C5				2'11"	5½"	10"	6½"	6"	
C6				2'6½"	4½"	8½"	5½"	5"	
C7	#3	1	1	2'4"	4½"	8"	5"	5"	3½"

NOTE: ALL REINFORCING BARS TO HAVE 1½" MINIMUM COVER.

STRAIGHT BARS

MARK	SIZE	NO.	LENGTH	
B1	#4	4	6'9"	
B2	#4	2	8"	

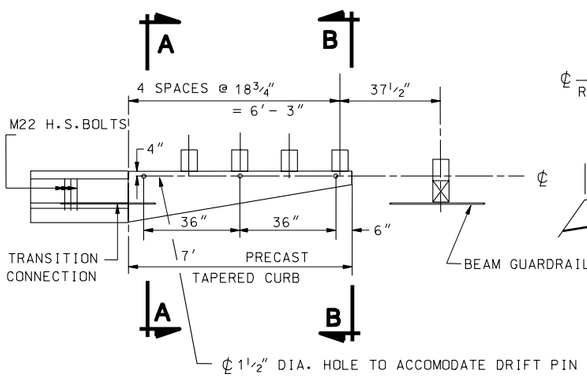

PLAN

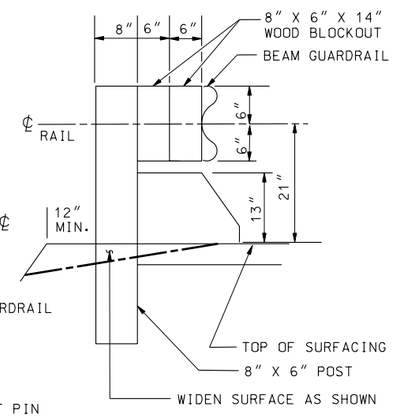

SECTION A-A

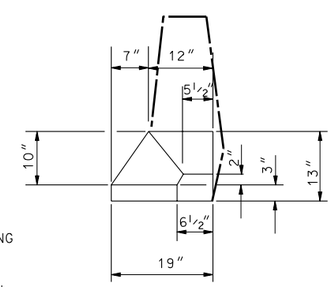

SECTION B-B

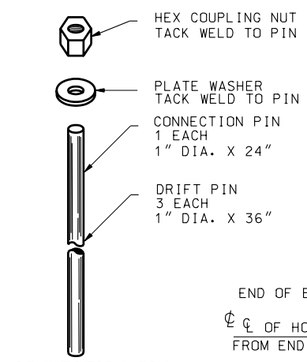

CONNECTION PIN & DRIFT PIN

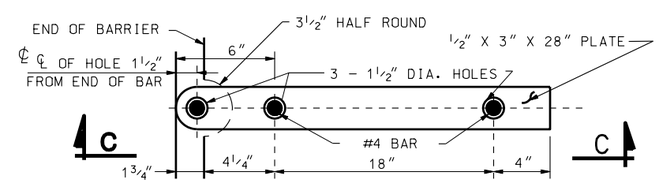

CONNECTION BAR

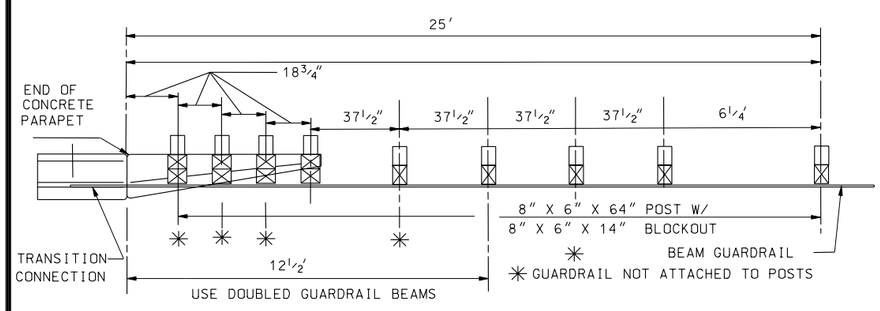

POST PLACEMENT

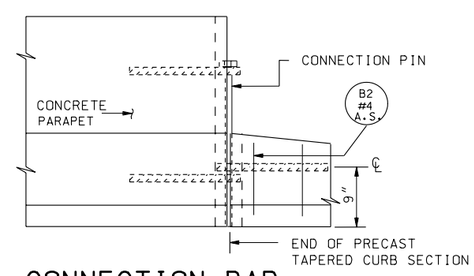

CONNECTION BAR PLACEMENT DETAIL

SECTION C-C

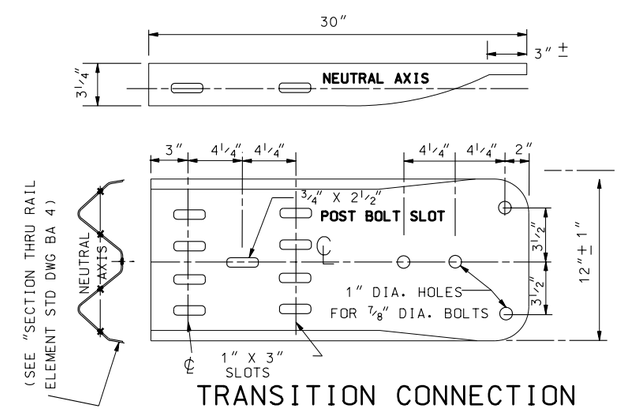

TRANSITION CONNECTION

NO.	DATE	APPR.	REMARKS

REVISIONS

UTAH DEPARTMENT OF TRANSPORTATION

STANDARD DRAWINGS FOR ROAD AND BRIDGE CONSTRUCTION

SALT LAKE CITY, UTAH

RECOMMENDED FOR APPROVAL — JULY 03,2002 DATE

CHAIRMAN STANDARDS COMMITTEE APPROVED — JULY 03,2002 DATE

DEPUTY DIRECTOR

STANDARD DRAWING TITLE: GUARDRAIL TRANSITION

STD DWG BA 4A