SCHEDULE

LINE	PIPE DIA. (IN.) D	PIPE ARCH (IN.) S	PIPE ARCH (IN.) R	DIVERSION BOX H	DIVERSION BOX A	DIMENSIONS H	T	M	N	P
1	12″	--	--	1′-9	12″	1′-9	4′-0	8″	2′-4	11 3/8″
2	18″	--	--	2′-3	18″	2′-3	4′-0	1′-0	3′-0	1′-5
3	24″	--	--	2′-9	24″	2′-9	4′-0	1′-6	4′-0	2′-1 1/2
4	30″	--	--	3′-3	30″	3′-3	5′-0	1′-10	4′-8	2′-7 1/8
5	36″	--	--	3′-9	36″	3′-9	6′-0	2′-3	5′-6	3′-2 1/8
6	42″	--	--	4′-3	42″	4′-3	7′-0	2′-8	6′-4	3′-9 1/4
7	48″	--	--	4′-9	48″	4′-9	7′-0	3′-2	7′-4	4′-5 3/4
8	--	36″	22″	2′-7	36″	2′-7	4′-0	1′-8	4′-4	2′-4 1/4
9	--	43″	27″	3′-0	43″	3′-0	4′-0	2′-2	5′-4	3′-0 3/4
10	--	50″	31″	3′-4	50″	3′-4	5′-0	2′-6	6′-0	3′-6 3/8
11	--	58″	36″	3′-9	58″	3′-9	6′-0	3′-0	7′-0	4′-3
12	--	65″	40″	4′-1	65″	4′-1	6′-0	3′-4	7′-8	4′-8 1/2
13	--	72″	44″	4′-5	72″	4′-5	7′-0	3′-9	8′-6	5′-3 5/8

LINE	TRANSITION (ONE EACH) B1 a	B1 b	B1 f	B1 LENGTH	B2 a	B2 b	B2 f	B2 LENGTH	B3 a	B3 b	B3 f	B3 LENGTH	B4 a	B4 b	B4 f	B4 LENGTH	B5 a	B5 b	B5 f	B5 LENGTH	B6 a	B6 b	B6 f	B6 LENGTH	B7 a	B7 b	B7 f	B7 LENGTH
1	1′-6	1′-7	93°	4′-8	1′-5	1′-4	101°	4′-1	1′-3	1′-2	111°	3′-7	1′-2	1′-0	126°	3′-2	--	--	--	--	--	--	--	--	--	--	--	--
2	1′-11	2′-1	94°	6′-1	1′-9	1′-10	102°	5′-5	1′-6	1′-7	114°	4′-8	1′-3	1′-6	128°	4′-3	--	--	--	--	--	--	--	--	--	--	--	--
3	2′-5	2′-7	94°	7′-7	2′-0	2′-4	104°	6′-8	1′-8	2′-2	115°	6′-0	1′-4	2′-1	128°	5′-6	--	--	--	--	--	--	--	--	--	--	--	--
4	2′-10	3′-1	93°	9′-0	2′-5	2′-10	101°	8′-1	2′-1	2′-8	110°	7′-5	1′-7	2′-7	120°	6′-9	1′-4	2′-7	130°	6′-6	--	--	--	--	--	--	--	--
5	3′-4	3′-7	93°	10′-6	2′-11	3′-4	100°	9′-7	2′-7	3′-2	107°	8′-11	2′-2	3′-2	115°	8′-6	1′-9	3′-1	123°	7′-11	1′-4	3′-2	131°	7′-8	--	--	--	--
6	3′-10	4′-2	93°	12′-2	3′-5	3′-11	98°	11′-3	3′-0	3′-10	105°	10′-8	2′-8	3′-8	111°	10′-0	2′-2	3′-8	118°	9′-6	1′-9	3′-8	125°	9′-1	1′-4	3′-8	132°	8′-8
7	4′-4	4′-8	93°	13′-8	3′-10	4′-5	99°	12′-8	3′-4	4′-4	105°	12′-0	2′-10	4′-3	112°	11′-4	2′-4	4′-3	119°	10′-10	1′-10	4′-3	125°	10′-4	1′-4	4′-4	132°	10′-0
8	2′-8	2′-4	106°	7′-4	2′-1	2′-3	117°	6′-7	1′-5	2′-4	129°	6′-1	--	--	--	--	--	--	--	--	--	--	--	--	--	--	--	--
9	3′-0	2′-9	107°	8′-6	2′-3	2′-10	119°	7′-11	1′-6	2′-11	130°	7′-4	--	--	--	--	--	--	--	--	--	--	--	--	--	--	--	--
10	3′-8	3′-2	104°	10′-0	2′-11	3′-2	113°	9′-3	2′-3	3′-3	123°	8′-9	1′-6	3′-5	131°	8′-4	--	--	--	--	--	--	--	--	--	--	--	--
11	4′-4	3′-8	102°	11′-8	3′-7	3′-8	110°	10′-11	2′-11	3′-9	118°	10′-5	2′-3	3′-11	125°	10′-1	1′-6	4′-1	132°	9′-8	--	--	--	--	--	--	--	--
12	5′-7	4′-0	94°	13′-7	4′-9	3′-11	102°	12′-7	3′-11	4′-0	110°	11′-11	3′-2	4′-1	118°	11′-4	2′-4	4′-4	125°	11′-0	1′-7	4′-7	132°	10′-9	--	--	--	--
13	6′-2	4′-4	93°	14′-10	5′-5	4′-4	100°	14′-1	4′-8	4′-4	107°	13′-4	3′-10	4′-5	113°	12′-8	3′-1	4′-7	119°	12′-3	2′-4	4′-9	125°	11′-10	1′-6	5′-0	131°	11′-6

LINE	C LENGTH	C NO.BARS	E A	E LENGTH	E NO.BARS	COLLAR A1 LENGTH	A1 NO.BARS	A2 LENGTH	A2 NO.BARS	A3 LENGTH	A3 NO.BARS	A4 LENGTH	A4 NO.BARS	LINE
1	4′-5	1	3′-10	5′-10	4	2′-0	8	1′-4	8	--	–	2′-8	8	1
2	4′-5	2	3′-10	5′-10	4	2′-6		1′-10		--	–	3′-2		2
3	4′-5	2	3′-10	5′-10	6	3′-0		2′-6		--	–	3′-8		3
4	5′-5	3	4′-10	6′-10	6	3′-6		2′-8		--	–	4′-2		4
5	6′-5	3	5′-10	7′-10	8	4′-0		2′-10		--	–	4′-8		5
6	7′-5	4	6′-10	8′-10	8	4′-6		3′-2		--	–	5′-2		6
7	7′-5	4	6′-10	8′-10	10	5′-0		3′-5	8	--	–	5′-8		7
8	4′-5	3	3′-10	5′-10	4	2′-10		3′-0	4	2′-3	4	4′-8		8
9	4′-5	4	3′-10	5′-10	4	3′-3		3′-2		2′-5		5′-3		9
10	5′-5	5	4′-10	6′-10	6	3′-7		3′-5		2′-5		5′-10		10
11	6′-5	5	5′-10	7′-10	8	4′-0		3′-6		2′-7		6′-6		11
12	6′-5	6	5′-10	7′-10	8	4′-4		4′-0		3′-5		7′-1		12
13	7′-5	6	6′-10	8′-10	10	4′-8	8	4′-0	4	3′-0	4	7′-8	8	13

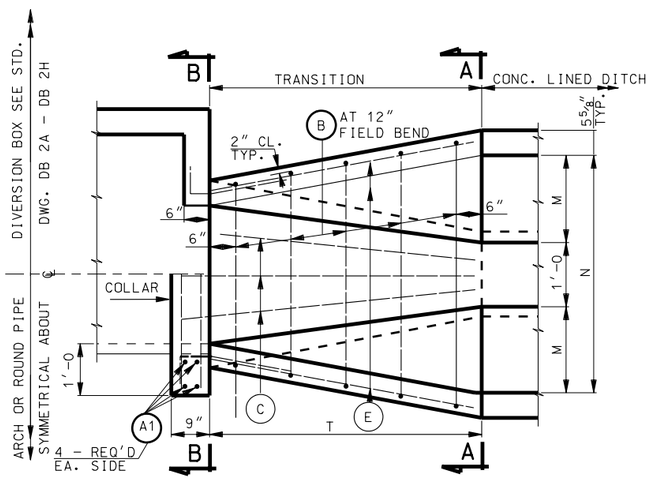

PLAN

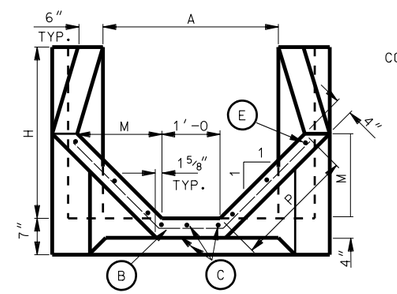

SECTION A-A
(DIVERSION BOX INSTALLATION)

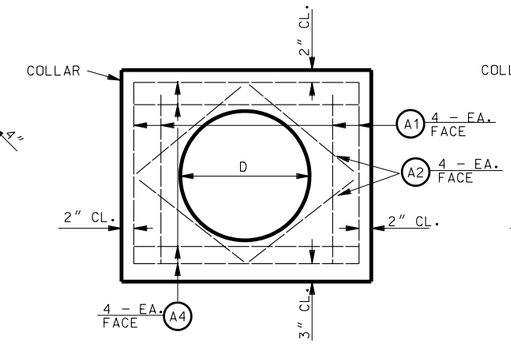

SECTION B-B
(ROUND PIPE INSTALLATION)

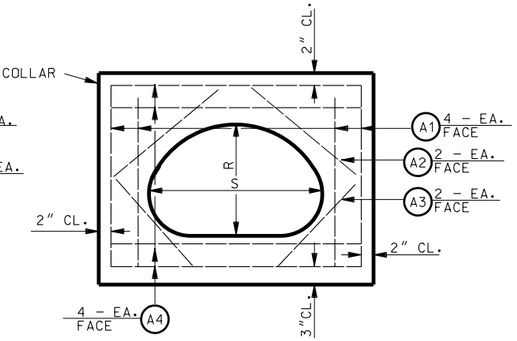

SECTION B-B
(ARCH PIPE INSTALLATION)

DESIGN DATA

HS 20-44 OR INTERSTATE ALTERNATE LOADING IN ACCORDANCE WITH CURRENT AASHTO SPECIFICATIONS AND INTERIM SPECIFICATIONS:

fc = 1,400 psi
fs = 24,000 psi
n = 8

NOTES:

1. USE COATED DEFORMED BILLET REINFORCING STEEL BARS CONFORMING TO AASHTO M 284 OR M 111 AND M 31 GRADE 60.
2. TYPE II CEMENT (LOW ALKALI) REQUIRED.
3. DEDUCT CONCRETE DISPLACED BY PIPE FROM THOSE CONCRETE QUANTITIES GIVEN IN SCHEDULE.
4. IF PIPE SIZES OTHER THAN SHOWN ARE USED OR IF PIPES ARE SKEWED, ADJUST CONCRETE QUANTITIES ACCORDINGLY.
5. USE #4 REINFORCING STEEL SPACED EQUALLY AT 12″±

QUANTITIES
(SEE SCHEDULE)

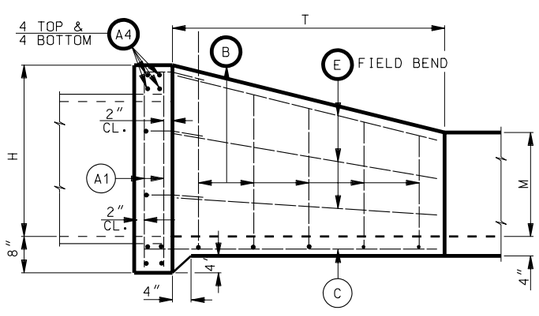

ELEVATION

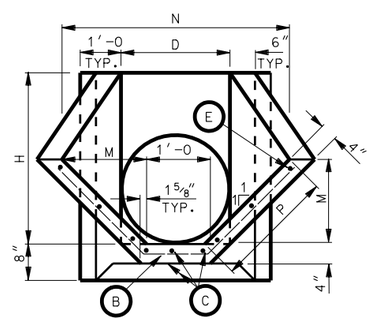

SECTION A-A
(ROUND PIPE INSTALLATION)

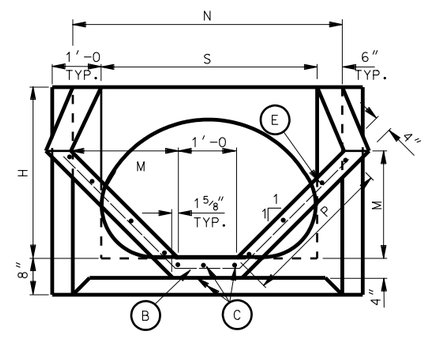

SECTION A-A
(ARCH PIPE INSTALLATION)

QUANTITIES

LINE	REINF. STEEL TRANS-ITION Lb.	REINF. STEEL COLLAR Lb.	CONCRETE TRANS-ITION Cu.Yd.	CONCRETE COLLAR Cu.Yd.
1	29	32.1	0.2614	0.2014
2	35	40.1	0.3351	0.2836
3	47	49.1	0.4219	0.3796
4	64	55.2	0.6174	0.4896
5	90	61.5	0.8587	0.6134
6	115	69.6	1.1392	0.7511
7	133	75.3	1.2887	0.9028
8	43	54.0	0.4503	0.4514
9	50	60.3	0.5325	0.5687
10	77	66.9	0.7429	0.6852
11	107	72.4	1.0151	0.8383
12	115	81.8	1.1100	0.9786
13	150	85.6	1.4140	1.1296

REVISIONS

NO.	DATE	APPR.	REMARKS

UTAH DEPARTMENT OF TRANSPORTATION
STANDARD DRAWINGS FOR ROAD AND BRIDGE CONSTRUCTION
SALT LAKE CITY, UTAH

RECOMMENDED FOR APPROVAL — JULY 03,2002 DATE
CHAIRMAN STANDARDS COMMITTEE APPROVED — JULY 03,2002 DATE
DEPUTY DIRECTOR

STANDARD TRANSITION CONCRETE LINED DITCH TO PIPE OR DIVERSION BOX
STANDARD DRAWING TITLE

STD DWG
CB 3