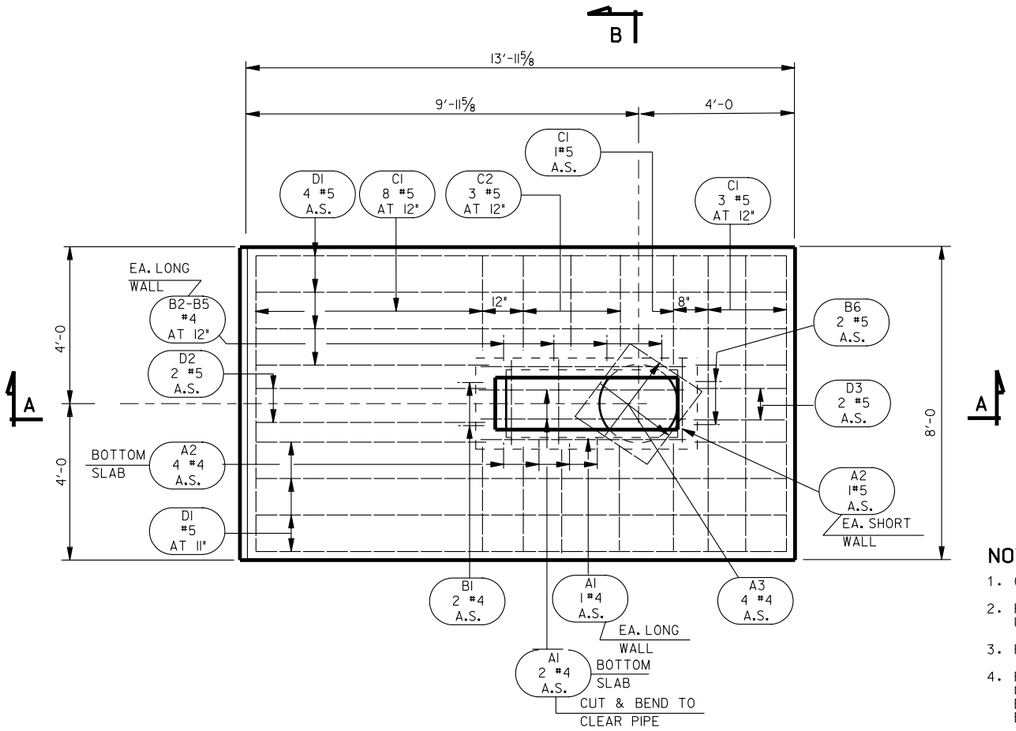

PLAN TYPE "A"

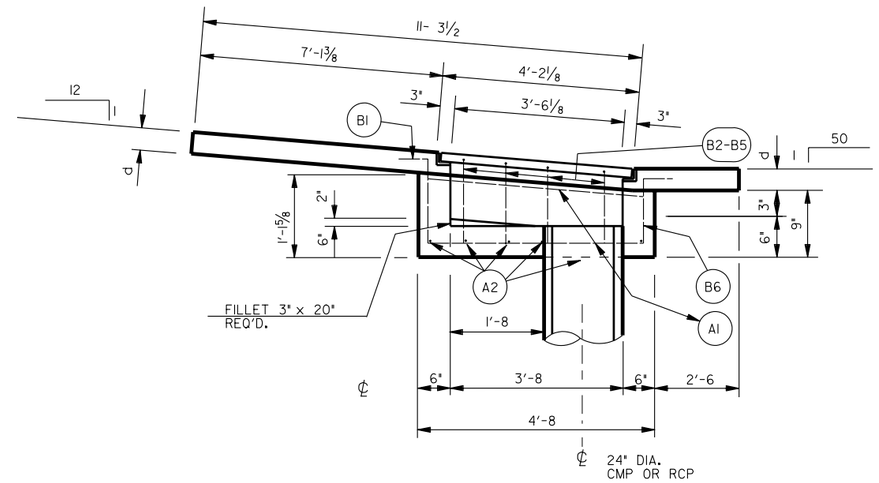

SECTION A-A

NOTES:

1. CENTER APRONS ON DITCH.
2. PLACE 6" OF UNTREATED BASE COURSE AND COMPACT TO THE DENSITY INDICATED BY UDOT STANDARD SPECIFICATIONS UNDER EACH SLAB PRIOR TO FORMING.
3. FIELD BEND D1 BARS AS REQUIRED TO CONFORM TO SLOPE.
4. FOUR STANDARD ANCHOR BOLTS ¾" DIA. X 6" REQUIRED. SPACE 19"+/- ON PERIPHERY OF CMP PIPE RISER AND POSITION THEM 3" FROM END OF SAID RISER. ANCHOR BOLTS AND NUTS. INCLUDE PAYMENT FOR FURNISHING AND PLACING GALVANIZE ANCHOR BOLTS AND NUTS IN THE PRICE PER LINEAR FOOT OF PIPE.
5. PROVIDE 2" CONCRETE COVER TO REINFORCING STEEL EXCEPT WHERE NOTED OTHERWISE.

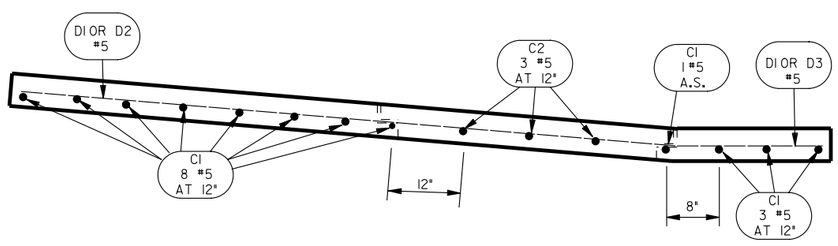

TYP. LONGITUDINAL APRON SECTION
(FOR TYPE "A" DROP INLET)

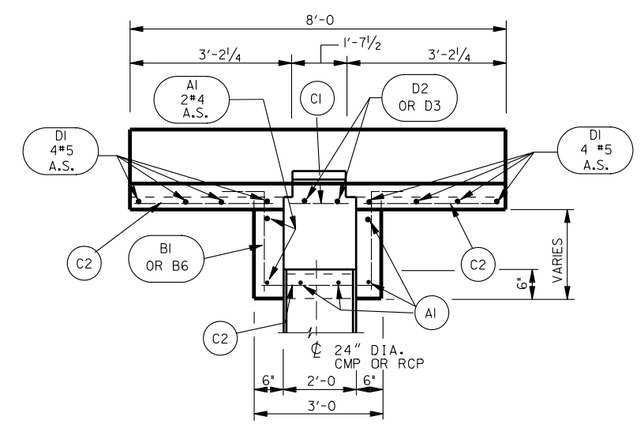

SECTION B-B

REINFORCING STEEL SCHEDULE

DROP INLET TYPE	DIMENSION (d)	A1			A2			A3			B1			B2			B3			B4			B5			B6			C1			C2			D1			D2			D3			QUANTITIES	
		SIZE	NO.	LENGTH	SIZE	NO.	LENGTH	SIZE	NO.	LENGTH	SIZE	NO.	a (d 1'-2)	SIZE	NO.	a (d 1'-2)	SIZE	NO.	a (d 1'-2)	SIZE	NO.	a (d 1'-2)	SIZE	NO.	a (d 1'-2)	SIZE	NO.	a (d 1'-2)	SIZE	NO.	LENGTH	SIZE	NO.	LENGTH	SIZE	NO.	LENGTH	SIZE	NO.	LENGTH	SIZE	NO.	LENGTH	REINF STEEL LB.	CONC. CU.YD.
A	8"	4	5	4'-4	4	5	2'-8	4	4	2'-0	4	2	1'-6	4	2	1'-5	4	2	1'-4	4	2	1'-3	4	2	1'-2	4	2	1'-0	6	12	7'-8	6	6	2'-10	5	8	13'-8	5	2	5'-5	5	2	3'-8	359	2.919

REVISIONS

NO.	DATE	APPR.	REMARKS

UTAH DEPARTMENT OF TRANSPORTATION
STANDARD DRAWINGS FOR ROAD AND BRIDGE CONSTRUCTION
SALT LAKE CITY, UTAH

RECOMMENDED FOR APPROVAL — JULY 03,2002 DATE

CHAIRMAN STANDARDS COMMITTEE APPROVED — JULY 03,2002 DATE

DEPUTY DIRECTOR

STANDARD CATCH BASIN AND CLEANOUT BOX DROP INLET TYPE "A" DETAIL

STANDARD DRAWING TITLE

STD DWG
CB 6B