TABLE #1

MAX. PIPE SIZES : 18" DIA. RCP OR 24" DIA. CMP

LINE NO.	DIMENSIONS H	K	W	M	A LENGTH	A NO.	B1 LENGTH	B1 NO.	B2 LENGTH	B2 NO.	C1 LENGTH	C1 NO.	C2 LENGTH	C2 NO.	D1 LENGTH	D1 NO.	D2 LENGTH	D2 NO.	D3 LENGTH	D3 NO.	D4 LENGTH	D4 NO.	D5 LENGTH	D5 NO.	G LENGTH	G NO.	QUANTITIES STANDARD REINF. STEEL LB.	STANDARD CONC. CU.YD.	W/ATT'CH APRON REINF. STEEL LB.	W/ATT'CH APRON CONC. CU.YD.
1	3'-6	2'-6	2'-0	4½"	4'-4	9	2'-8	8	6"	4	4'-4	2	2'-8	4	3'-5	4	3'-4	2	3'-3	2	3'-2	2	3'-1	4	3'-4	2	143	1.067	437	3.456
2	4'-0	3'-0	↑	↑	↑	11	↑	10	↑	↑	↑	↑	↑	↑	3'-11	↑	3'-10	↑	3'-9	↑	3'-8	↑	3'-7	↑	↑	3	170	1.190	464	3.579
3	4'-6	3'-6				11		10							4'-5		4'-4		4'-3		4'-2		4'-1			3	177	1.313	471	3.702
4	5'-0	4'-0				13		12							4'-11		4'-10		4'-9		4'-8		4'-7			4	197	1.437	491	3.826
5	5'-6	4'-6				13		12							5'-5		5'-4		5'-3		5'-2		5'-1			4	211	1.560	505	3.949
6	6'-0	5'-0				15		14							5'-11		5'-10		5'-9		5'-8		5'-7			5	238	1.684	532	4.073
7	6'-6	5'-6				15		14							6'-5		6'-4		6'-3		6'-2		6'-1			5	245	1.807	539	4.196
8	7'-0	6'-0				17		16							6'-11		6'-10		6'-9		6'-8		6'-7			6	272	1.931	566	4.320
9	7'-6	6'-6				17		16							7'-5		7'-4		7'-3		7'-2		7'-1			6	279	2.054	573	4.443
10	8'-0	7'-0				19		18							7'-11		7'-10		7'-9		7'-8		7'-7			7	306	2.178	600	4.567
11	8'-6	7'-6	↓	↓	↓	19	↓	18	↓	↓	↓	↓	↓	↓	8'-5	↓	8'-4	↓	8'-3	↓	8'-2	↓	8'-1	↓	↓	7	314	2.301	608	4.690
12	9'-0	8'-0	2'-0	4½"	4'-4	21	2'-8	20	6"	4	4'-4	2	2'-8	4	8'-11	4	8'-10	2	8'-9	2	8'-8	2	8'-7	4	3'-4	8	341	2.425	635	4.814

TABLE #2

MAX. PIPE SIZES : 24" DIA. RCP OR 30" DIA. CMP

LINE NO.	DIMENSIONS H	K	W	M	A LENGTH	A NO.	B1 LENGTH	B1 NO.	B2 LENGTH	B2 NO.	C1 LENGTH	C1 NO.	C2 LENGTH	C2 NO.	D1 LENGTH	D1 NO.	D2 LENGTH	D2 NO.	D3 LENGTH	D3 NO.	D4 LENGTH	D4 NO.	D5 LENGTH	D5 NO.	G LENGTH	G NO.	QUANTITIES STANDARD REINF. STEEL LB.	STANDARD CONC. CU.YD.	W/ATT'CH APRON REINF. STEEL LB.	W/ATT'CH APRON CONC. CU.YD.
1	—	—	—	—	—	—	—	—	—	—	—	—	—	—	—	—	—	—	—	—	—	—	—	—	—	—	—	—	—	—
2	4'-0	3'-0	2'-6	10½"	4'-4	13	3'-2	10	1'-0	4	4'-4	2	3'-2	4	3'-11	4	3'-10	2	3'-9	2	3'-8	2	3'-7	4	3'-4	3	188	1.347	471	3.679
3	4'-6	3'-6	↑	↑	↑	13	↑	10	↑	↑	↑	↑	↑	↑	4'-5	↑	4'-4	↑	4'-3	↑	4'-2	↑	4'-1	↑	↑	3	195	1.480	478	3.812
4	5'-0	4'-0				15		12							4'-11		4'-10		4'-9		4'-8		4'-7			4	223	1.612	506	3.944
5	5'-6	4'-6				15		12							5'-5		5'-4		5'-3		5'-2		5'-1			4	230	1.745	513	4.077
6	6'-0	5'-0				17		14							5'-11		5'-10		5'-9		5'-8		5'-7			5	258	1.878	541	4.210
7	6'-6	5'-6				17		14							6'-5		6'-4		6'-3		6'-2		6'-1			5	266	2.010	549	4.342
8	7'-0	6'-0				19		16							6'-11		6'-10		6'-9		6'-8		6'-7			6	294	2.143	577	4.475
9	7'-6	6'-6				19		16							7'-5		7'-4		7'-3		7'-2		7'-1			6	301	2.276	584	4.608
10	8'-0	7'-0				21		18							7'-11		7'-10		7'-9		7'-8		7'-7			7	329	2.409	612	4.741
11	8'-6	7'-6	↓	↓	↓	21	↓	18	↓	↓	↓	↓	↓	↓	8'-5	↓	8'-4	↓	8'-3	↓	8'-2	↓	8'-1	↓	↓	7	336	2.541	619	4.873
12	9'-0	8'-0	2'-6	10½"	4'-4	23	3'-2	20	1'-0	4	4'-4	2	3'-2	4	8'-11	4	8'-10	2	8'-9	2	8'-8	2	8'-7	4	3'-4	8	364	2.974	647	5.006

TABLE #3

MAX. PIPE SIZES : 30" DIA. RCP OR 36" DIA. CMP

LINE NO.	DIMENSIONS H	K	W	M	A LENGTH	A NO.	B1 LENGTH	B1 NO.	B2 LENGTH	B2 NO.	C1 LENGTH	C1 NO.	C2 LENGTH	C2 NO.	D1 LENGTH	D1 NO.	D2 LENGTH	D2 NO.	D3 LENGTH	D3 NO.	D4 LENGTH	D4 NO.	D5 LENGTH	D5 NO.	G LENGTH	G NO.	QUANTITIES STANDARD REINF. STEEL LB.	STANDARD CONC. CU.YD.	W/ATT'CH APRON REINF. STEEL LB.	W/ATT'CH APRON CONC. CU.YD.
1	4'-6	3'-6	3'-0	1'-4½	4'-4	15	3'-8	10	1'-6	4	4'-4	2	3'-8	4	4'-5	5	4'-4	2	4'-3	2	4'-2	2	4'-1	5	3'-4	3	223	1.646	493	3.920
2	5'-0	4'-0	↑	↑	↑	17	↑	12	↑	↑	↑	↑	↑	↑	4'-11	↑	4'-10	↑	4'-9	↑	4'-8	↑	4'-7	↑	↑	4	252	1.788	522	4.062
3	5'-6	4'-6				17		12							5'-5		5'-4		5'-3		5'-2		5'-1			4	261	1.930	531	4.204
4	6'-0	5'-0				19		14							5'-11		5'-10		5'-9		5'-8		5'-7			5	291	2.072	561	4.346
5	6'-6	5'-6				19		14							6'-5		6'-4		6'-3		6'-2		6'-1			5	299	2.214	569	4.488
6	7'-0	6'-0				21		16							6'-11		6'-10		6'-9		6'-8		6'-7			6	329	2.356	599	4.630
7	7'-6	6'-6				21		16							7'-5		7'-4		7'-3		7'-2		7'-1			6	338	2.498	608	4.772
8	8'-0	7'-0				23		18							7'-11		7'-10		7'-9		7'-8		7'-7			7	368	2.640	638	4.914
9	8'-6	7'-6	↓	↓	↓	23	↓	18	↓	↓	↓	↓	↓	↓	8'-5	↓	8'-4	↓	8'-3	↓	8'-2	↓	8'-1	↓	↓	7	376	2.781	646	5.055
10	9'-0	8'-0	3'-0	1'-4½	4'-4	25	3'-8	20	1'-6	4	4'-4	2	3'-8	4	8'-11	5	8'-10	2	8'-9	2	8'-8	2	8'-7	5	3'-4	8	406	2.923	676	5.197

TABLE #4

MAX. PIPE SIZES : 36" DIA. RCP OR 42" DIA. CMP

LINE NO.	DIMENSIONS H	K	W	M	A LENGTH	A NO.	B1 LENGTH	B1 NO.	B2 LENGTH	B2 NO.	C1 LENGTH	C1 NO.	C2 LENGTH	C2 NO.	D1 LENGTH	D1 NO.	D2 LENGTH	D2 NO.	D3 LENGTH	D3 NO.	D4 LENGTH	D4 NO.	D5 LENGTH	D5 NO.	G LENGTH	G NO.	QUANTITIES STANDARD REINF. STEEL LB.	STANDARD CONC. CU.YD.	W/ATT'CH APRON REINF. STEEL LB.	W/ATT'CH APRON CONC. CU.YD.
1	—	—	—	—	—	—	—	—	—	—	—	—	—	—	—	—	—	—	—	—	—	—	—	—	—	—	—	—	—	—
2	5'-0	4'-0	3'-6	1'-10½	4'-4	17	4'-2	12	2'-0	4	4'-4	4	4'-2	4	4'-11	5	4'-10	2	4'-9	2	4'-8	2	4'-7	5	3'-4	4	272	1.963	542	4.180
3	5'-6	4'-6	↑	↑	↑	17	↑	12	↑	↑	↑	↑	↑	↑	5'-5	↑	5'-4	↑	5'-3	↑	5'-2	↑	5'-1	↑	↑	4	280	2.114	550	4.331
4	6'-0	5'-0				19		14							5'-11		5'-10		5'-9		5'-8		5'-7			5	312	2.266	582	4.483
5	6'-6	5'-6				19		14							6'-5		6'-4		6'-3		6'-2		6'-1			5	320	2.417	590	4.634
6	7'-0	6'-0				21		16							6'-11		6'-10		6'-9		6'-8		6'-7			6	351	2.568	621	4.785
7	7'-6	6'-6				21		16							7'-5		7'-4		7'-3		7'-2		7'-1			6	359	2.719	629	4.936
8	8'-0	7'-0				23		18							7'-11		7'-10		7'-9		7'-8		7'-7			7	390	2.870	660	5.087
9	8'-6	7'-6	↓	↓	↓	23	↓	18	↓	↓	↓	↓	↓	↓	8'-5	↓	8'-4	↓	8'-3	↓	8'-2	↓	8'-1	↓	↓	7	399	3.022	669	5.239
10	9'-0	8'-0	3'-6	1'-10½	4'-4	25	4'-2	20	2'-0	4	4'-4	4	4'-2	4	8'-11	5	8'-10	2	8'-9	2	8'-8	2	8'-7	5	3'-4	8	430	3.173	700	5.390

NOTES:

1. FOR TYPICAL FLOOR PLAN SEE STD DWG CB 6G AND CB 6H
2. PLACE 1-"A" BAR OR 3-"A" BARS AT 3" SPACING ADJACENT TO OPENING IN TOP SLAB OF BOX DESCRIBED BY TABLE 1 AND TABLE 2, RESPECTIVELY. PLACE 5-"A" BARS AT 3" SPACING AS PREVIOUSLY DESCRIBED IN ALL OTHER TABLES. ALL ADDITIONAL BARS, WHERE APPLICABLE, ARE SPACED AT 1'-0 MAX.
3. THE OPTION- W/ATT'CH APRON IS BASED ON MODIFYING THE STANDARD BOX SHOWN. DELETE THE TOP SLAB WITH THE APPROPRIATE REINFORCING STEEL AND REPLACE IT WITH ONE OF THE APRONS SHOWN ON STD DWG CB 6E

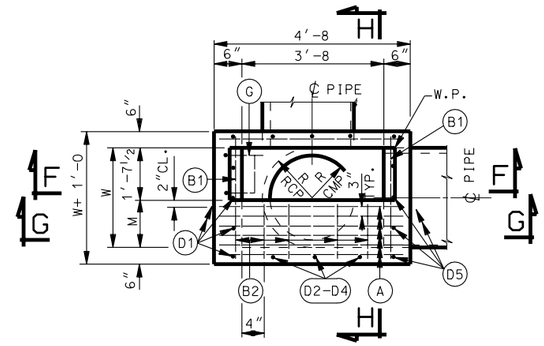

PLAN

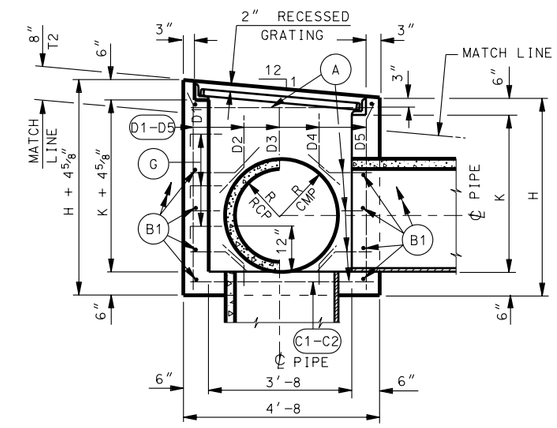

SECTION F-F

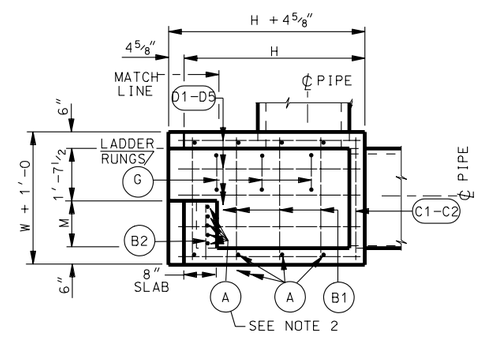

SECTION H-H

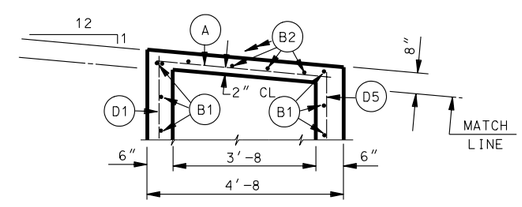

PARTIAL SECTION G-G

NO.	DATE	APPR.	REMARKS

REVISIONS

UTAH DEPARTMENT OF TRANSPORTATION
STANDARD DRAWINGS FOR ROAD AND BRIDGE CONSTRUCTION
SALT LAKE CITY, UTAH

RECOMMENDED FOR APPROVAL — JULY 03,2002 DATE
CHAIRMAN STANDARDS COMMITTEE
APPROVED — JULY 03,2002 DATE
DEPUTY DIRECTOR

STANDARD CATCH BASIN AND CLEANOUT BOX DROP INLET TYPE "C" DETAILS

STANDARD DRAWING TITLE

STD DWG
CB 6D