CRASH CUSHION TYPE G

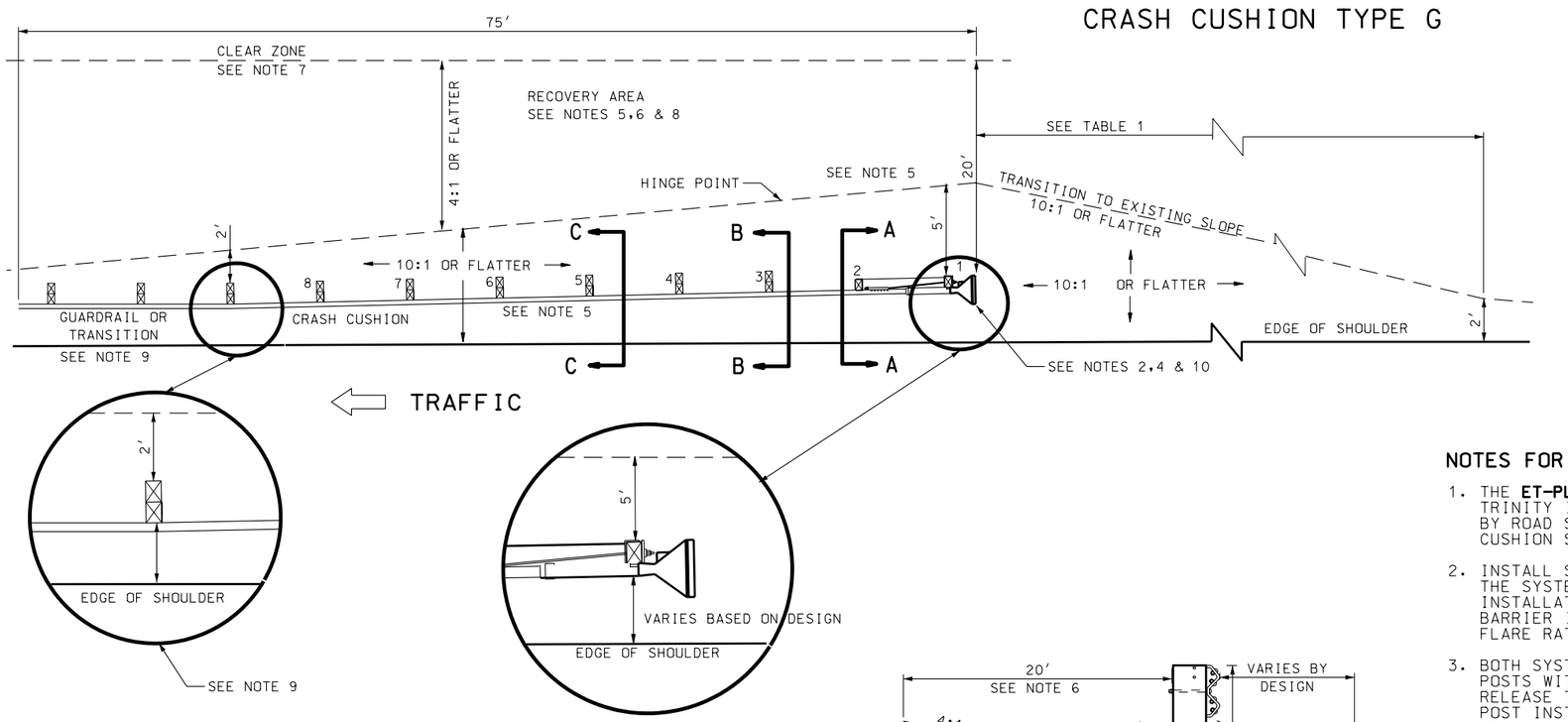

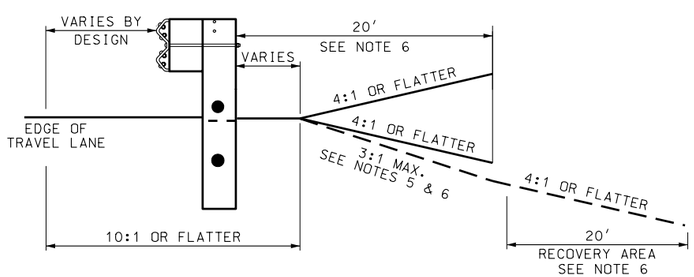

TYPICAL SECTION C-C

POSTS 5-8

SEE NOTE 3

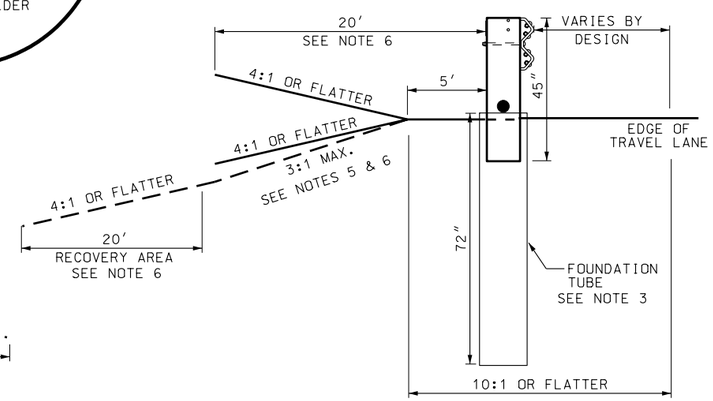

TYPICAL SECTION A-A

POSTS 1-2

SEE NOTES 2 & 3

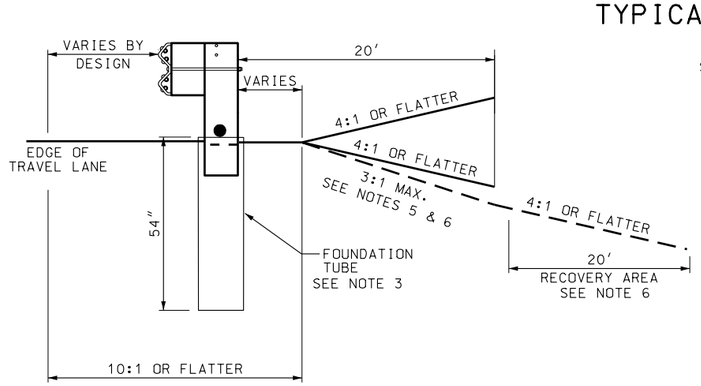

TYPICAL SECTION B-B

POSTS 3-4

TABLE 1

SPEED MPH	TAPER	MINIMUM LENGTH FEET
LESS THAN 40	7:1	70
40 TO 55	10:1	100
60 TO 75	15:1	150

NOTES FOR END SECTION TYPE G

1. THE **ET-PLUS**, MANUFACTURED BY SYRO INC., TRINITY INDUSTRIES AND, THE **SKT-350**, MANUFACTURED BY ROAD SYSTEMS INC. ARE THE APPROVED CRASH CUSHION SYSTEMS.

2. INSTALL SYSTEMS AT A 50:1 FLARE FROM THE REAR OF THE SYSTEM, WHEN USED ON A TANGENT BARRIER INSTALLATION. WHEN SYSTEM IS USED WITH A FLARED BARRIER INSTALLATION, INSTALL SYSTEM AT THE SAME FLARE RATE AS THE BARRIER INSTALLATION.

3. BOTH SYSTEMS HAVE OPTIONS OF WOOD BREAKAWAY POSTS WITH FOUNDATION TUBES AND CONTROL RELEASE TERMINAL (**CRT**) POSTS, OR STEEL BREAKAWAY POST INSTALLATIONS. REFER TO THE GUIDELINES FOR CRASH CUSHIONS FOR ACCEPTABLE SYSTEM REQUIREMENTS. USE ONLY THE MANUFACTURER'S SPECIFIED STEEL BREAKAWAY POSTS WITH THE SUPPLIED SYSTEM. SYSTEMS USE A 72 INCH FOUNDATION TUBE AT POSTS 1 AND 2 AND A 54 INCH FOUNDATION TUBE AT POSTS 3 AND 4. POST 1 THROUGH 4 ARE SHORTENED BREAKAWAY POSTS AS SUPPLIED BY THE MANUFACTURER. THE TOP OF THE FOUNDATION TUBE IS NO GREATER THAN 4 INCHES ABOVE GROUND LINE.
   WHEN SYSTEM IS INSTALLED WITH **CRT** POSTS AT POSTS 5,6,7 AND 8 THE BOTTOM OF THE TOP HOLE IS AT GROUND LEVEL. WHEN INSTALLED WITH STEEL BREAKAWAY POSTS AT 5,6,7 AND 8, THE HINGE POINT OF THE POST IS NOT PLACE BELOW THE GROUND LINE OR HIGHER THAN 1 INCH ABOVE GROUND LINE.

4. **ET-PLUS:** DO NOT ATTACH RAIL AT POSTS 1 AND 5 WITH A POST BOLT. **SKT-350:** DO NOT ATTACH RAIL AT POST 1 WITH A POST BOLT.

5. COMPLETE SLOPE GRADING REQUIREMENTS PRIOR TO INSTALLATION. A SLOPE OF 10:1 TO THE RAIL ELEMENT FACE, APPROACH AREA AND DIRECTLY BEHIND THE SYSTEM IS REQUIRED. NO SLOPES GREATER THAN 4:1 TO THE EXISTING SLOPE AT THE HINGE POINTS BEHIND THE SYSTEM AND THE APPROACH AREA TRANSITION.

6. USE A 4:1 OR FLATTER FILL SLOPE IN RECOVERY AREA, IF IMPRACTICAL, USE A MAXIMUM 3:1 FILL SLOPE AND ESTABLISH A RECOVERY AREA AT THE TOE OF THE 3:1 FILL SLOPE. WHEN USED WITH A CUT SLOPE, A 4:1 OR FLATTER CUT IS REQUIRED IN THE RECOVERY AREA.

7. RECOVER AREA 20 FEET X 75 FEET MINIMUM. MAY NEED TO BE GREATER TO MEET AASHTO CLEAR ZONE REQUIREMENTS FROM THE EDGE OF TRAVEL LANE.

8. CLEAR RECOVERY AND APPROACH AREAS OF ANY FIXED OBJECTS.

9. USE GUARDRAIL TRANSITION, STD DWG BA 4A, WHEN ATTACHING SYSTEM TO CONCRETE BARRIER OR BRIDGE PARAPET.

10. INSTALL REQUIRED MARKINGS AS PER STD DWG CC 1.

11. REFER TO THE GUIDELINES FOR CRASH CUSHIONS FOR SPECIFIC SYSTEM INFORMATION.

REVISIONS

NO.	DATE	APPR.	REMARKS
1	10/16/02	F.W.	CRASH CUSHION TYPE G - CORRECTED STD DWG CALLOUT FROM BA 2B TO BA 4A IN NOTE 6.
2	01/28/03	G.S.	REMOVE CRASH CUSHION TYPE F, REWROTE ALL NOTES, ADDED TYPICAL SECTION B-B AND ADDED TABLE 1

UTAH DEPARTMENT OF TRANSPORTATION

STANDARD DRAWINGS FOR ROAD AND BRIDGE CONSTRUCTION
SALT LAKE CITY, UTAH

RECOMMENDED FOR APPROVAL — APR.24,2003 DATE

CHAIRMAN STANDARDS COMMITTEE APPROVED — APR.24,2003 DATE

DEPUTY DIRECTOR

GRADING & INSTALLATION DETAILS CRASH CUSHION TYPE G

STANDARD DRAWING TITLE

STD DWG

CC 8

DGN File:N:\Esd\Standard.Drawings\Imperial\Approved\Crash Cushions (CC)\CC08.dgn

08-OCT-2003