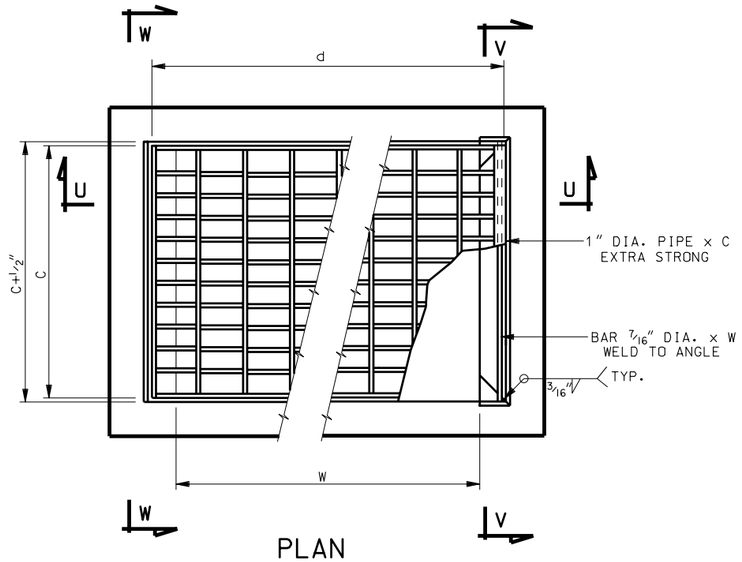

PLAN

DETAIL OF BICYCLE-SAFE GRATING

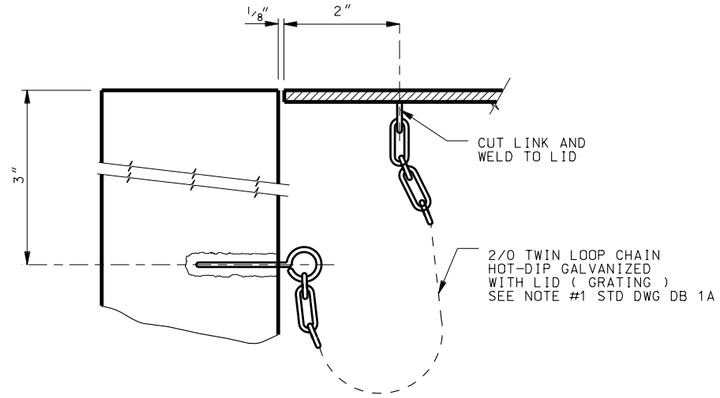

SECTION Z-Z

NOTE #1 STD DWG DB 1A
LENGTH OF CHAIN:
FOR LID: L = 1'-9
FOR GRATING: L = 2'-6

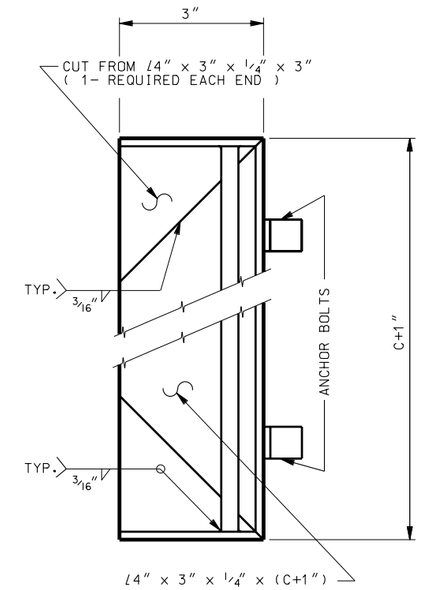

SECTION S-S

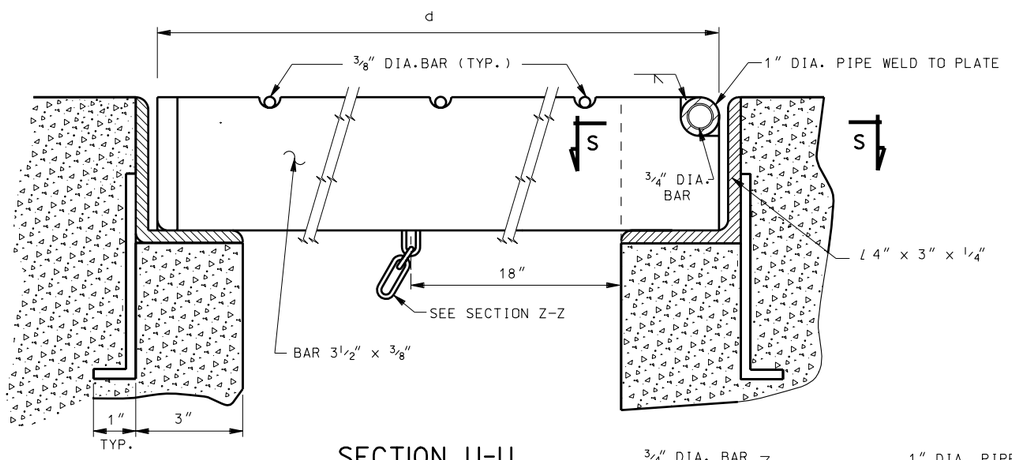

SECTION U-U

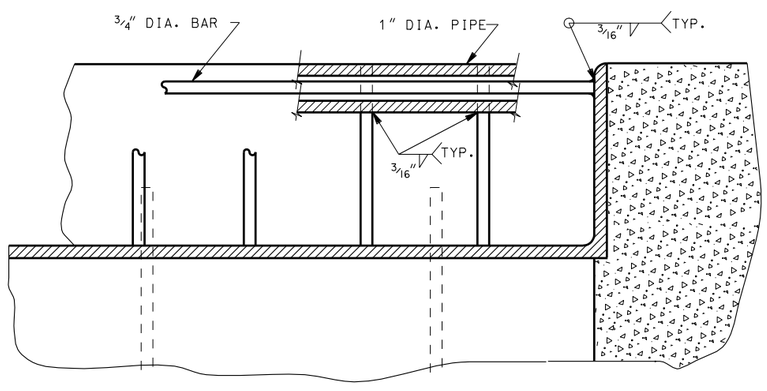

SECTION V-V

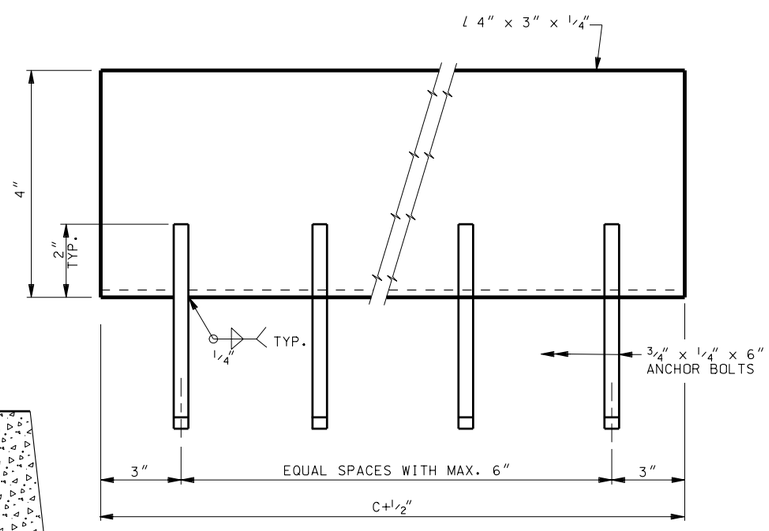

SECTION W-W

DIMENSIONS & QUANTITIES
(SEE SCHEDULES ON STD DWG DB 1D)

NO.	DATE	APPR.	REMARKS

REVISIONS

UTAH DEPARTMENT OF TRANSPORTATION
STANDARD DRAWINGS FOR ROAD AND BRIDGE CONSTRUCTION
SALT LAKE CITY, UTAH

RECOMMENDED FOR APPROVAL — JULY 03,2002 DATE

CHAIRMAN STANDARDS COMMITTEE APPROVED — JULY 03,2002 DATE

DEPUTY DIRECTOR

STANDARD DIVERSION
BOX BICYCLE-SAFE
GRATING DETAILS
18" DIA OR 24" DIA.PIPE

STANDARD DRAWING TITLE

STD DWG
DB 1C