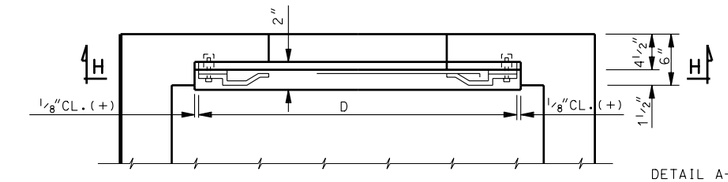

PARTIAL PLAN

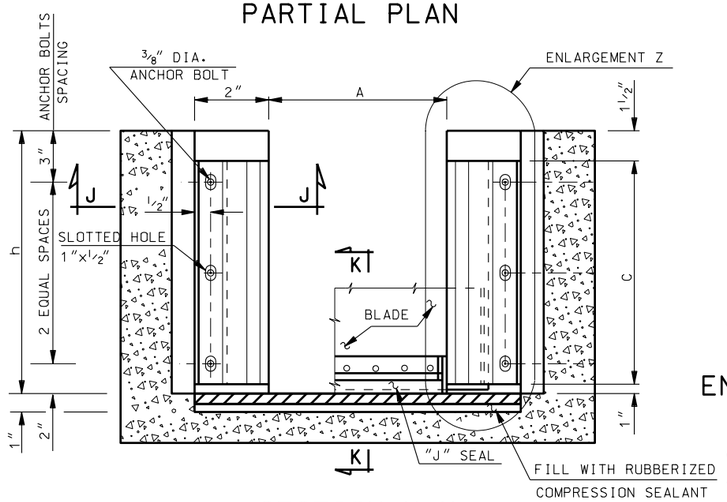

SECTION H-H
TYPE Ga
REQUIRED WITH FLUME

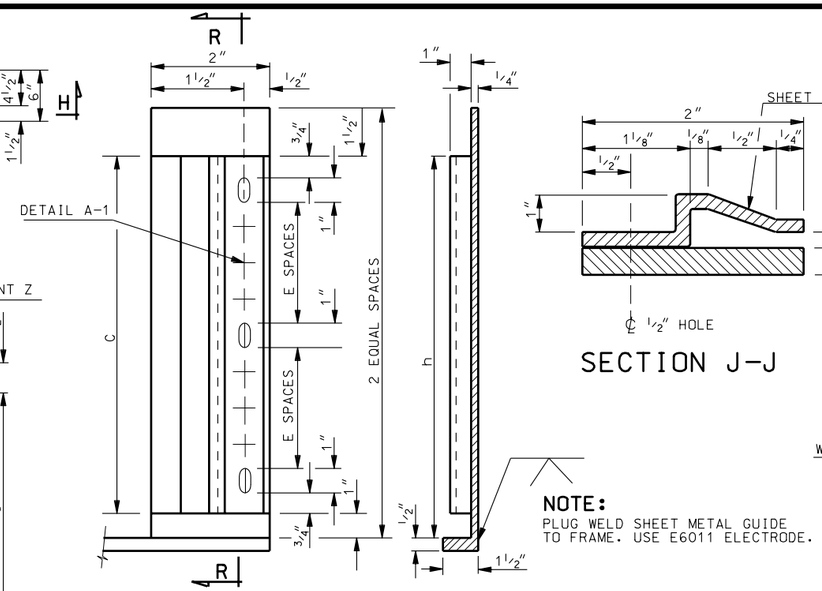

ENLARGEMENT Z

SECTION R-R

NOTE:
PLUG WELD SHEET METAL GUIDE TO FRAME. USE E6011 ELECTRODE.

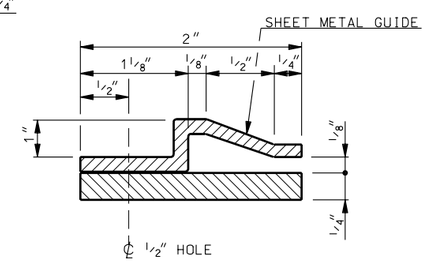

SECTION J-J

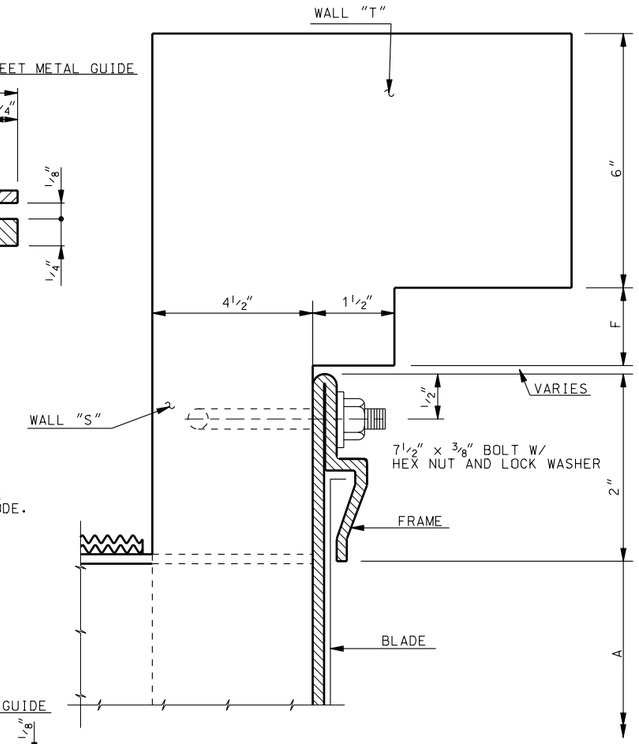

SECTION L-L

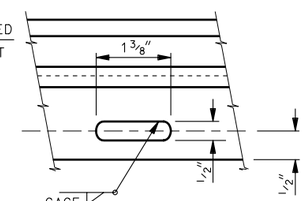

DETAIL A-1

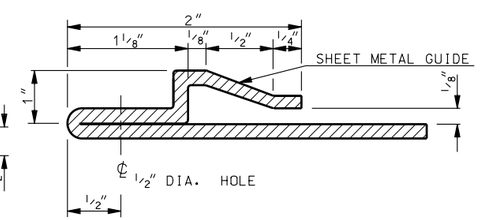

SECTION M-M

NOTES:
1. INSTALL SHEET METAL FRAME PERPENDICULAR TO THE FLOOR OF THE BOX PRIOR TO CASTING THE WALLS. BE CAREFUL NOT TO SCAR OR OTHERWISE DAMAGE THE FRAYING SURFACES BETWEEN THE BLADE AND THE FRONT FACE OF THE FRAME SO THAT FRAME REMAINS WATER-TIGHT WHEN CLOSED.
2. FABRICATE THE BLADE AND FRAME OF ZINC COATED STEEL. CONFORM TO AASHTO M 218

NOTE:
WELD FRAME WATER-TIGHT TO THE END OF THE METAL PIPE. GAGE OF METAL PIPE IS THE SAME AS THE GAGE OF THE FRAME.

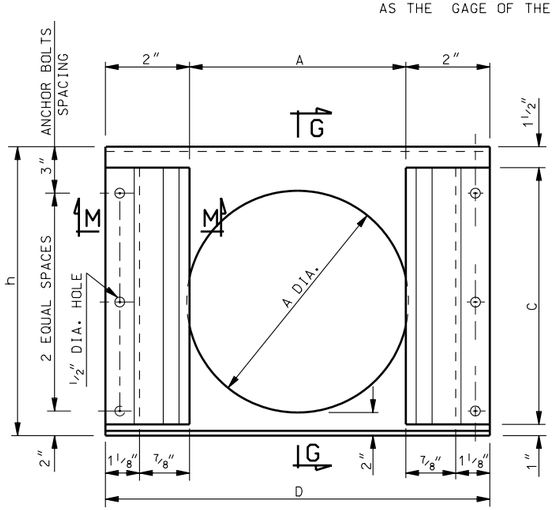

TYPE Ga

REQUIRED WITH PIPE
ROUND PIPE SHOWN
ARCH PIPE SIMILAR

NOTE:
NUMBER OF SLOT WELDS TO ONE LESS THAN THE NUMBER OF E SPACES.

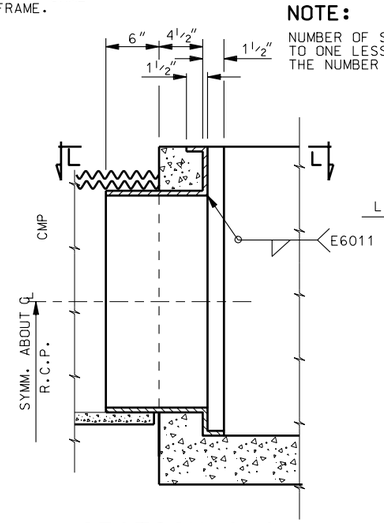

SECTION G-G

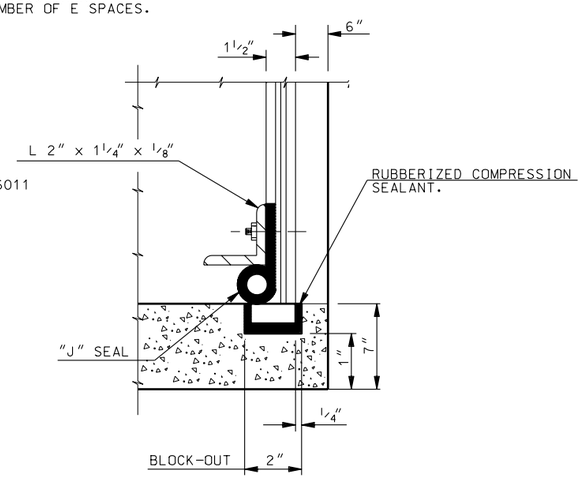

SECTION K-K

DESIGN DATA

HS-20 OR INTERSTATE ALTERNATE LOADING IN ACCORDANCE WITH CURRENT AASHTO AND INTERIM SPECIFICATIONS.
CAST-IN-PLACE STRUCTURAL CONCRETE: Fc = 1,400 psi, N = 8
REINF. STEEL: Fs = 24,000 psi

NOTES:
1. ALL BOLTS: A-307 BOLTS UNLESS OTHERWISE INDICATED.
2. GALVANIZED FASTENERS:CONFORM TO ASTM STANDARDS A 307 AND A 164.

NO.	DATE	APPR.	REMARKS

REVISIONS

UTAH DEPARTMENT OF TRANSPORTATION
STANDARD DRAWINGS FOR ROAD AND BRIDGE CONSTRUCTION
SALT LAKE CITY, UTAH

RECOMMENDED FOR APPROVAL — JULY 03,2002 DATE
CHAIRMAN STANDARDS COMMITTEE APPROVED — JULY 03,2002 DATE
DEPUTY DIRECTOR

STANDARD DIVERSION BOX W/INTERCHANGEABLE WALLS HAND SLIDE GATE DETAILS
STANDARD DRAWING TITLE

STD DWG
DB 2C