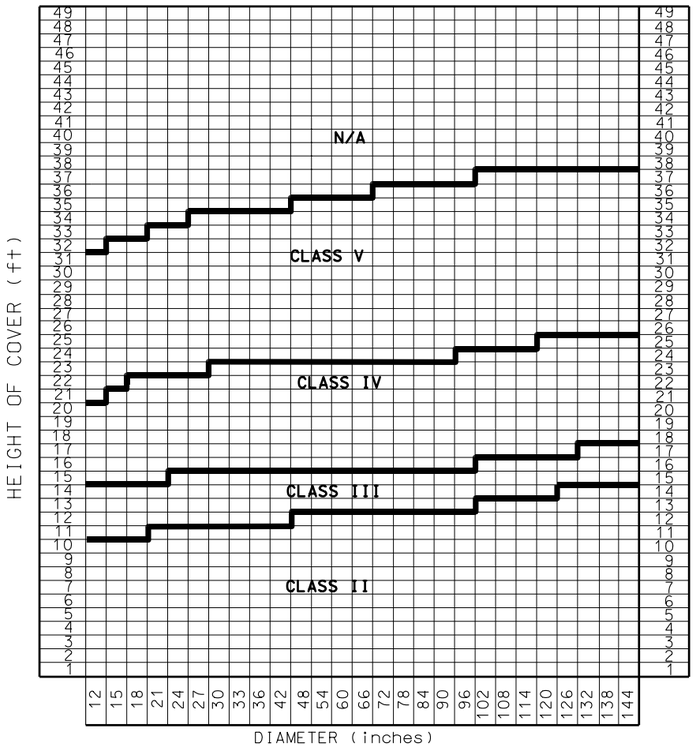

REINFORCED CIRCULAR PIPE FILL HEIGHT TABLE

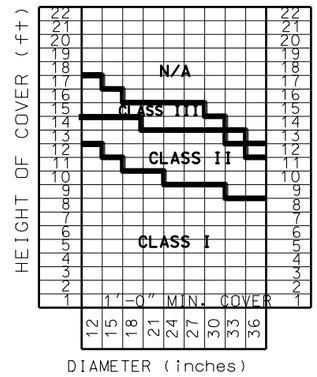

NON-REINFORCED CIRCULAR PIPE FILL HEIGHT TABLE

NOTES:

1. PRECOMPACTION & COMPACTION: REFER TO AASHTO T-99
2. RECESS THE BEDDING TO RECEIVE CULVERT JOINTS WHERE APPLICABLE.
3. HAUNCH AREAS UNDER PIPE MUST BE IN FIRM AND INTIMATE CONTACT WITH THE ENTIRE BOTTOM SURFACE OF THE PIPE WITHOUT DISTURBING THE PIPE FROM SPECIFIED LINE AND GRADE.
4. USE A MINIMUM 12 inches HEIGHT (H) OF FILL BETWEEN THE TOP THE CULVERT AND BOTTOM OF ROADWAY SURFACING FOR REINFORCED AND NON-REINFORCED CONCRETE PIPES.
5. MAINTAIN A MINIMUM 24 inches OF COVER FOR REINFORCED AND 48 inches OF COVER FOR NON-REINFORCED PIPE DURING CONSTRUCTION.

INSTALLATION SOILS AND MINIMUM COMPACTION REQUIREMENTS

TYPE OF BEDDING	TYPE OF SOIL FOUNDATION	BEDDING THICKNESS	HAUNCH & OUTER BEDDING	LOWER SIDE
TYPE I	OTHER THAN ROCK OR UNSTABLE SOIL	Do/24 BUT NOT LESS THAN 6"	95 % A1,A3	90% A1, A3 OR 95% A2, A4 OR 100% A5, A6 OR NATURAL SOILS OF EQUAL FIRMNESS
TYPE II	ROCK	Do/12 BUT NOT LESS THAN 12"	95 % A1,A3	90% A1, A3 OR 95% A2, A4 OR 100% A5, A6 OR NATURAL SOILS OF EQUAL FIRMNESS
TYPE III	UNSTABLE *	NOT LESS THAN 12"	95 % A1,A3	90% A1, A3 OR 95% A2, A4 OR 100% A5, A6 OR NATURAL SOILS OF EQUAL FIRMNESS

* UNSTABLE SOIL FOUNDATION : FOUNDATION CONSISTING OF ORGANIC SOILS OR MATERIALS SUCH AS PEAT. MOSS & BOG OR FINE GRAINED SOILS (SILTS OR CLAYS) AND UNCEMENTED SANDS WHOSE WATER CONTENT EXCEEDS THEIR LIQUID LIMIT, SUCH SOILS WILL REQUIRE THAT A "TYPE III" BEDDING BE USED.

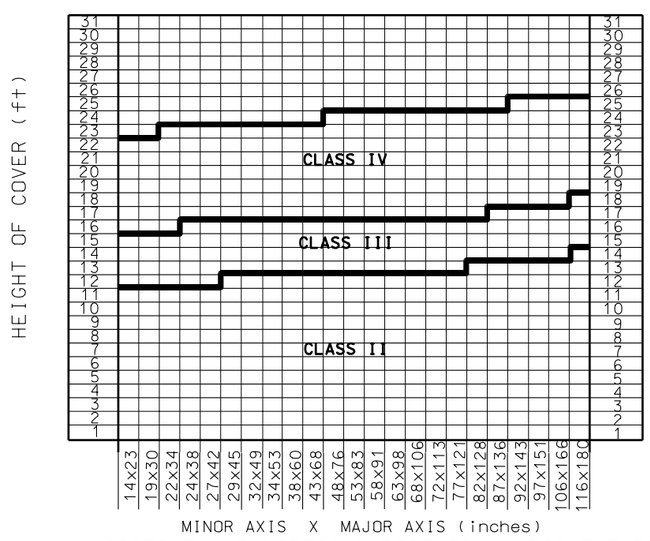

HORIZONTAL ELLIPTICAL PIPE FILL HEIGHT TABLE

LEGEND:

= USE ON SITE BEDDING MATERIAL OR GRANULAR BACKFILL BORROW (2"MAX.) AS REQ'D. (IN ACCORDANCE WITH THE TYPE OF BEDDINGS I,II OR III) MEETING THE FOLLOWING REQUIREMENTS:
- A. ON-SITE MATERIAL EXCLUDING UNSTABLE SOIL AS DEFINED BELOW.
- B. USE GRANULAR BACKFIL BORROW HAVING INTERMEDIATE FRACTIONS FROM NO.200 SIEVE TO 2" MAXIMUM MATERIAL.

= ZONE OF PIPE BACKFIL & COMPACTION. USE ON-SITE MATERIAL CONTAINING NO ROCK LARGER THEN 2" IN SIZE & FREE OF FROZEN LUMPS OR CLAY.

BACKFILL / BEDDING REQUIREMENTS

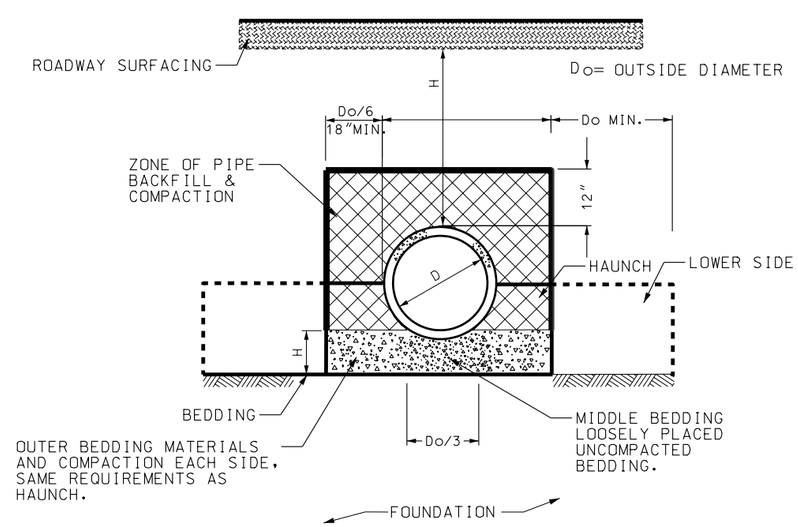

REVISIONS

NO.	DATE	APPR.	REMARKS

UTAH DEPARTMENT OF TRANSPORTATION
STANDARD DRAWINGS FOR ROAD AND BRIDGE CONSTRUCTION
SALT LAKE CITY, UTAH

RECOMMENDED FOR APPROVAL — JULY 03,2002 DATE
CHAIRMAN STANDARDS COMMITTEE APPROVED — JULY 03,2002 DATE
DEPUTY DIRECTOR

PRECAST CONCRETE PIPE CULVERT

STANDARD DRAWING TITLE

STD DWG
DG 6