# SILT FENCE

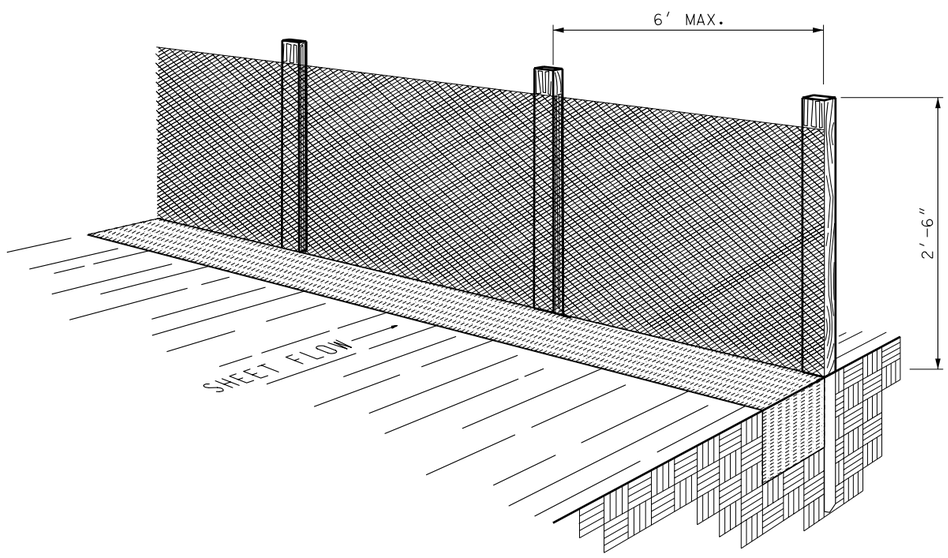


**PERSPECTIVE VIEW**

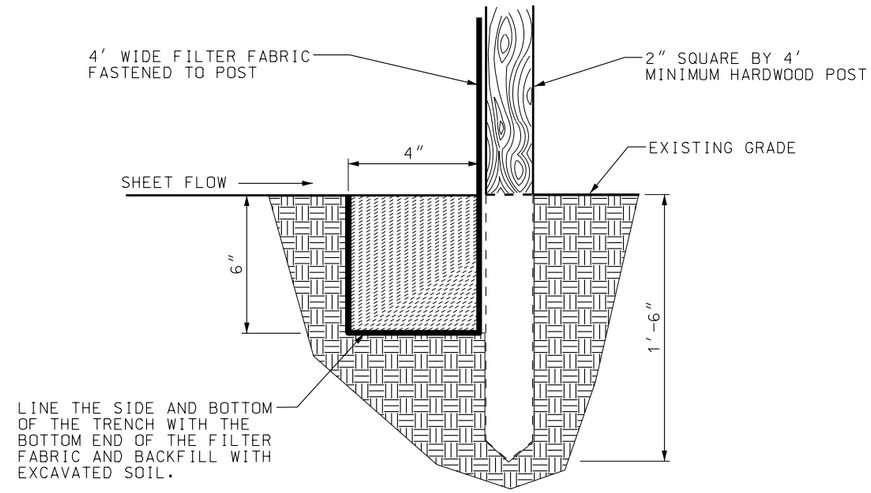


**SECTION**

NOTES:

1. WHERE POSSIBLE, LAYOUT THE SILT FENCE 5′ TO 10′ BEYOND THE TOE OF SLOPE.
2. ALIGN THE FENCE ALONG THE CONTOUR AS CLOSE AS POSSIBLE.
3. WHEN EXCAVATING THE TRENCH, USE MACHINERY THAT WILL PRODUCE NO MORE THAN THE DESIRED DIMENSIONS.
4. EXTEND THE BOTTOM 1′- 4″ OF FILTER FABRIC TO LINE ALL THREE SIDES OF THE TRENCH.
5. TO AVOID EXCESSIVE PONDING OF WATER AT LOW POINTS ALONG THE FENCE, PROVIDE AN OPENING IN THE SILT FENCE AND INSTALL A CHECK DAM.
6. AVOID USING JOINTS ALONG THE FENCE AS MUCH AS POSSIBLE. IF A JOINT IS NECESSARY, SPLICE THE FILTER FABRIC AT A POST WITH 6″ OVERLAPS AND SECURELY FASTEN BOTH ENDS TO THE POST.
7. MAINTAIN A PROPERLY FUNCTIONING SILT FENCE THROUGHOUT THE DURATION OF THE PROJECT OR UNTIL DISTURBED AREAS HAVE BEEN VEGETATED.
8. REMOVE SEDIMENT AS IT ACCUMULATES AND PLACE IT IN A STABLE AREA APPROVED BY THE ENGINEER.

REVISIONS

| NO. | DATE | APPR. | REMARKS |
|---|---|---|---|
| 1 | 04/24/03 | F.W. | CORRECT POST SPACING IN PERSPECTIVE VIEW |

UTAH DEPARTMENT OF TRANSPORTATION
STANDARD DRAWINGS FOR ROAD AND BRIDGE CONSTRUCTION
SALT LAKE CITY, UTAH

RECOMMENDED FOR APPROVAL — APRIL 24,2003 DATE

CHAIRMAN STANDARDS COMMITTEE APPROVED — APRIL 24,2003 DATE

DEPUTY DIRECTOR

STANDARD DRAWING TITLE: TEMPORARY EROSION CONTROL (SILT FENCE)

STD DWG EN 2

09-OCT-2003 DGN File:N:\Esd\Standard_Drawings\Imperial\Approved\Environmental Controls (EN)\EN02.dgn