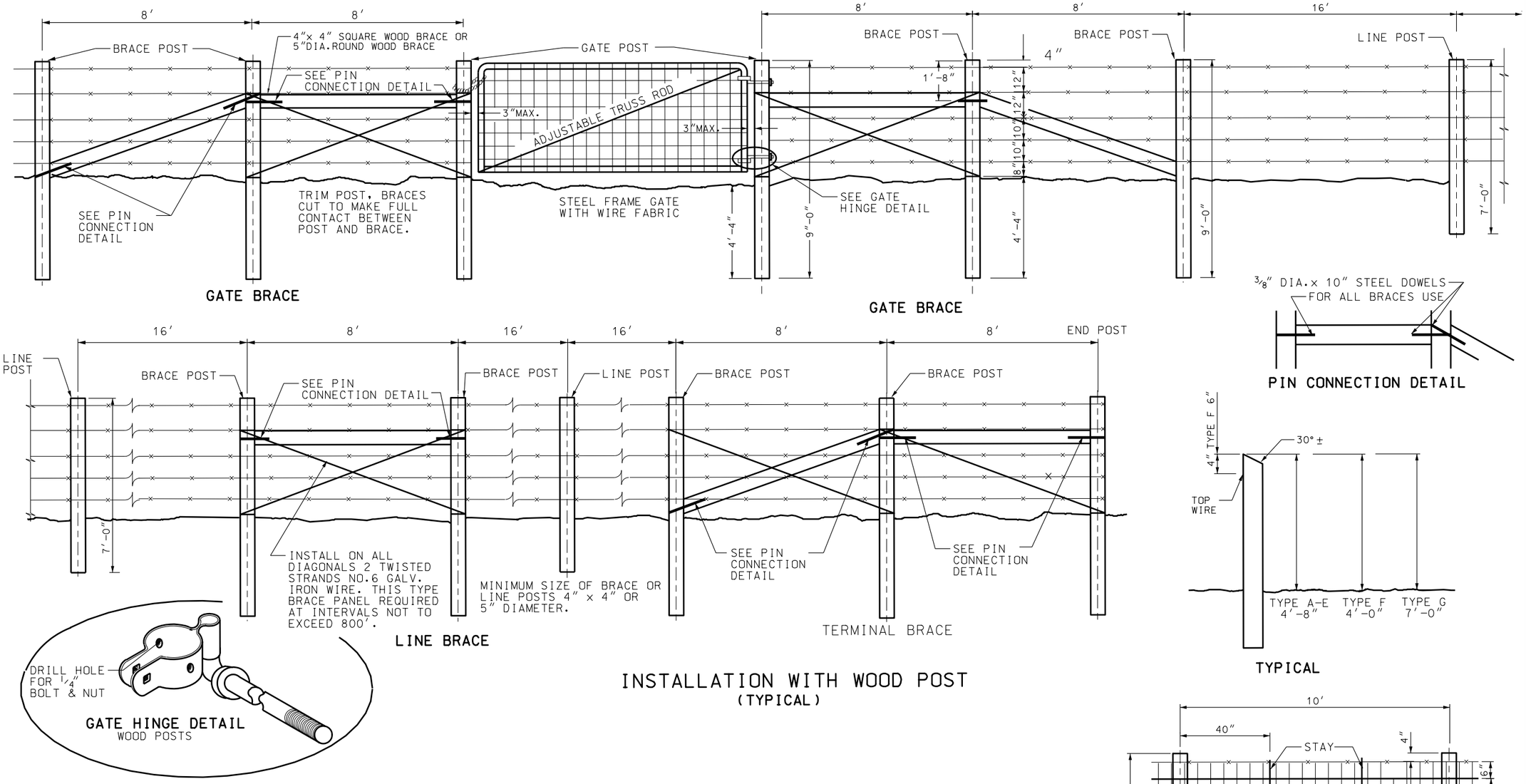

INSTALLATION WITH WOOD POST
(TYPICAL)

POST SIZE, SPACING AND BRACING FOR TYPES A,B,D,E AND F FENCE THE SAME AS SHOWN IN TYPICAL INSTALLATION ABOVE. USE TWO STAYS EVENLY SPACED BETWEEN EACH SET OF POSTS.

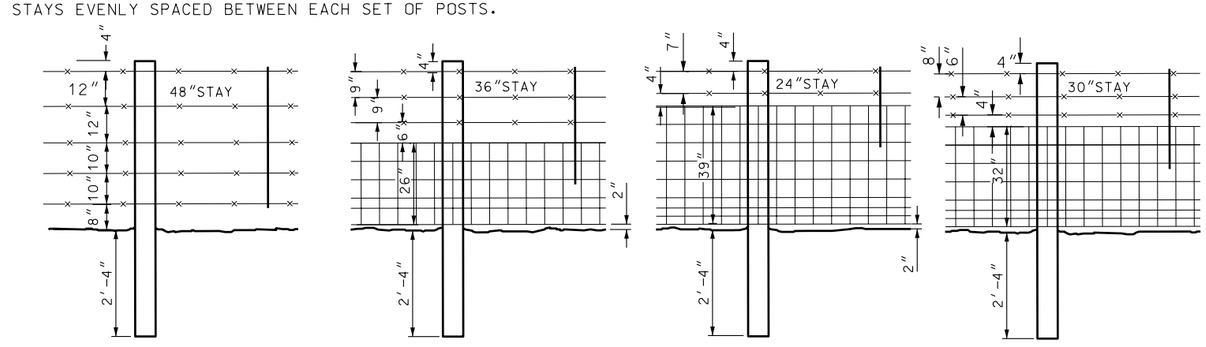

TYPE A

TYPE B

TYPE D

TYPE E

SPACING AND BRACING TYPE F THE SAME AS SHOWN IN TYPICAL INSTALLATION ABOVE. POST MAY BE 6′-4″ IN LENGTH.

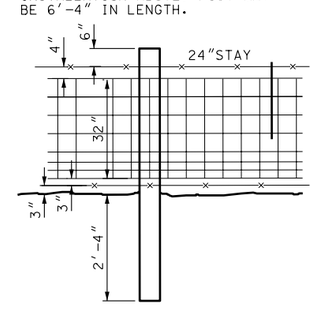

TYPE F
TO BE INSTALLED IN DEER COUNTRY

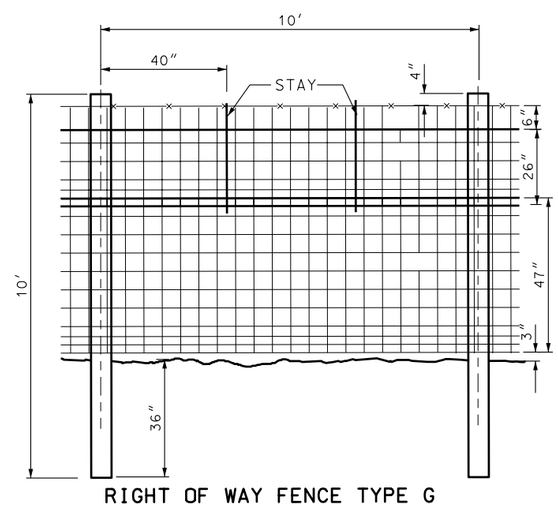

RIGHT OF WAY FENCE TYPE G
(DEER BARRIER)

NOTE: LAP THE 47″ & 26″ MESH WIRE 2″. WIRE TIE OR CLAMP THE 47″ x 26″ WIRE MESH TOGETHER. DO NOT EXCEED 2 FOOT SPACING OF THE CONNECTIONS.

NO.	DATE	APPR.	REVISIONS	REMARKS

UTAH DEPARTMENT OF TRANSPORTATION
STANDARD DRAWINGS FOR ROAD AND BRIDGE CONSTRUCTION
SALT LAKE CITY, UTAH

RECOMMENDED FOR APPROVAL — JULY 03,2002 DATE

CHAIRMAN STANDARDS COMMITTEE APPROVED — JULY 03,2002 DATE

DEPUTY DIRECTOR

RIGHT OF WAY FENCE AND GATES (WOOD POST)

STANDARD DRAWING TITLE

STD DWG
FG 1A