INSTALLATION WITH WOOD POSTS
(TYPICAL.)

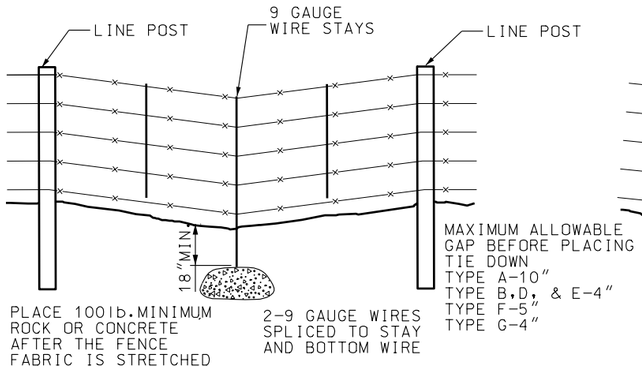

TYPICAL SAG SECTION

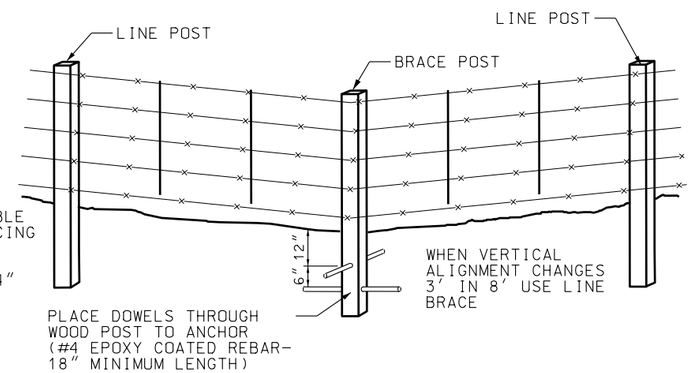

TYPICAL VERTICAL ALIGNMENT CHANGE

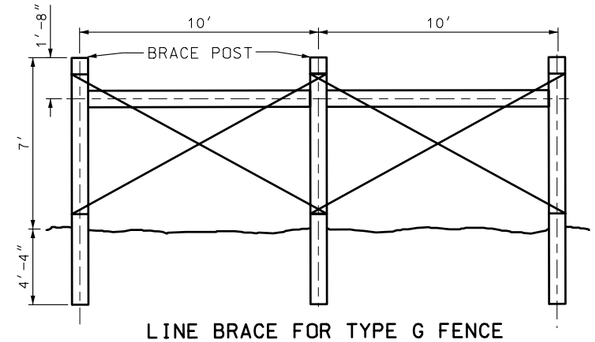

LINE BRACE FOR TYPE G FENCE

BRACE AT INTERWALS NOT EXCEEDING 400'.

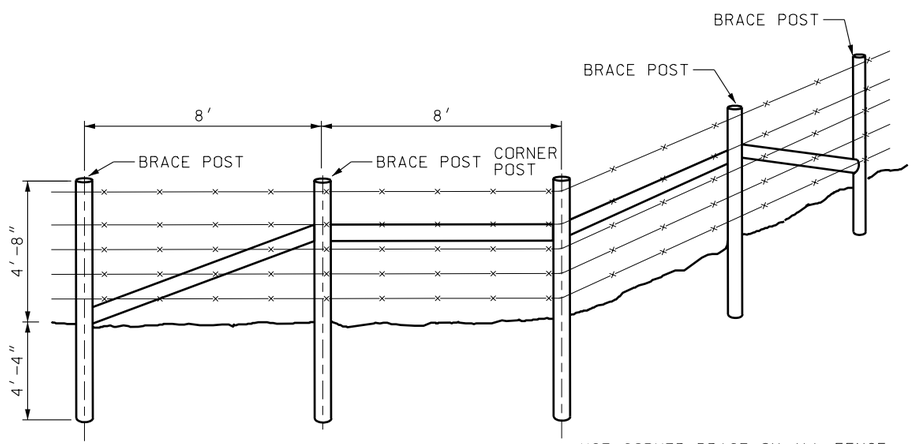

CORNER BRACE

USE CORNER BRACE ON ALL FENCE LINE DEVIATION WHEN WOOD POSTS ARE USED

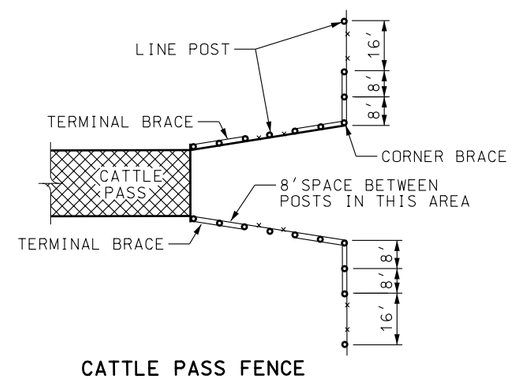

CATTLE PASS FENCE DETAIL

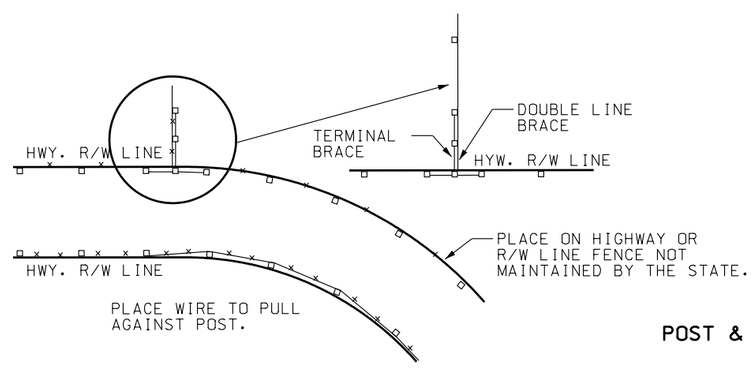

POST & WIRE LOCATION

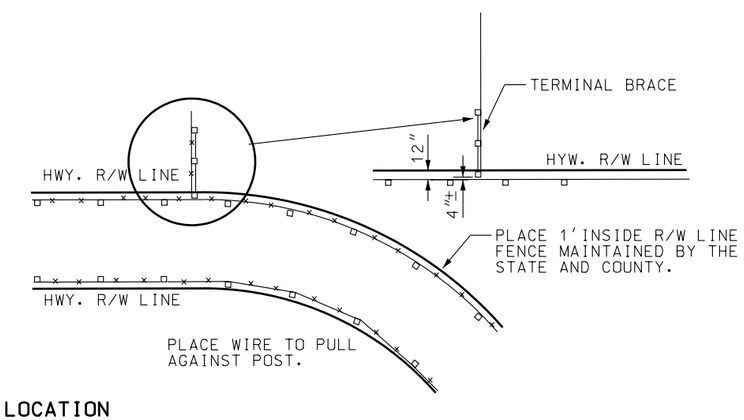

POST & WIRE LOCATION

NO.	DATE	APPR.	REMARKS

REVISIONS

UTAH DEPARTMENT OF TRANSPORTATION
STANDARD DRAWINGS FOR ROAD AND BRIDGE CONSTRUCTION
SALT LAKE CITY, UTAH

RECOMMENDED FOR APPROVAL — JULY 03,2002 DATE

CHAIRMAN STANDARDS COMMITTEE APPROVED — JULY 03,2002 DATE

DEPUTY DIRECTOR

RIGHT OF WAY
FENCE AND GATES
(WOOD POST)

STANDARD DRAWING TITLE

STD DWG
FG 1B