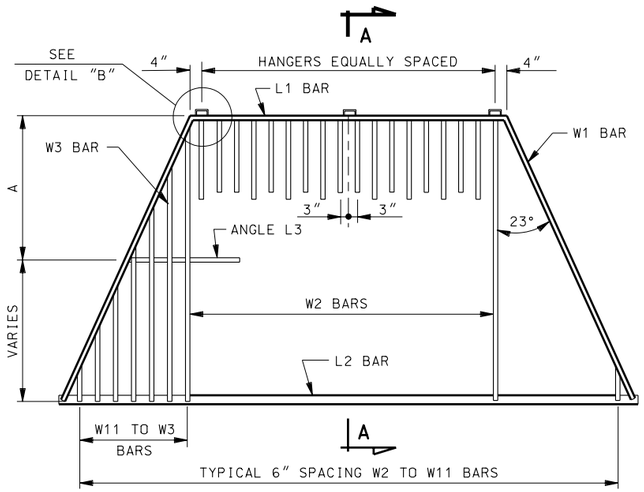

STEEL GRATING DETAIL

SEE STD DWG GF 11 & GF 12 FOR LINES 1 THRU 48

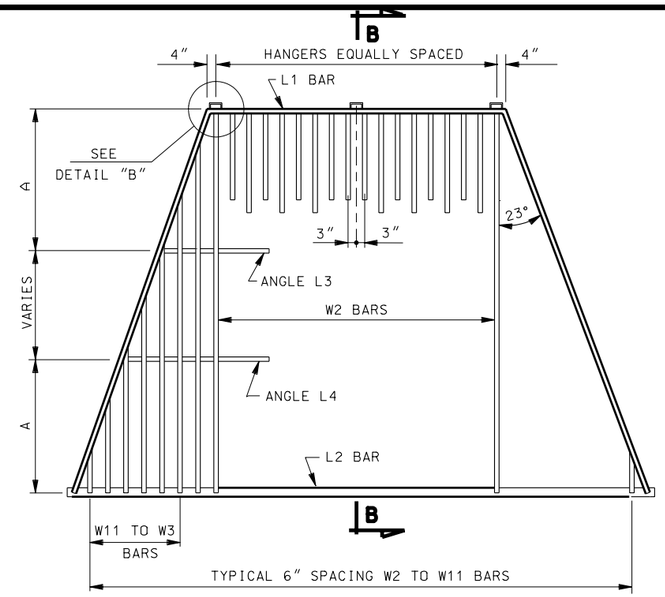

STEEL GRATING DETAIL

SEE STD DWG GF 12 FOR LINES 48 THERU 90

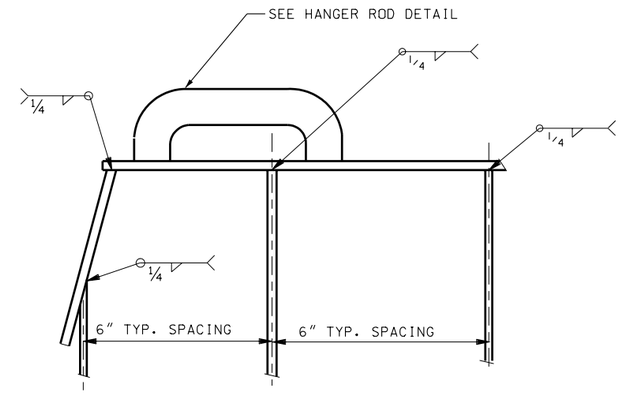

DETAIL "B"

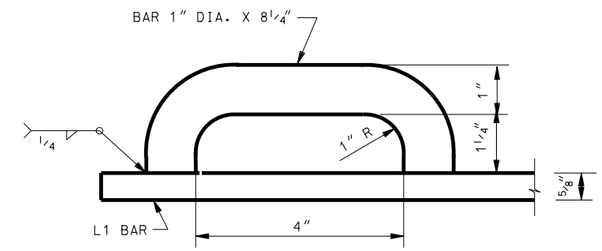

HANGER ROD DETAIL

(WEIGHT OF HANGER RODS 1.84 LBS. EACH)

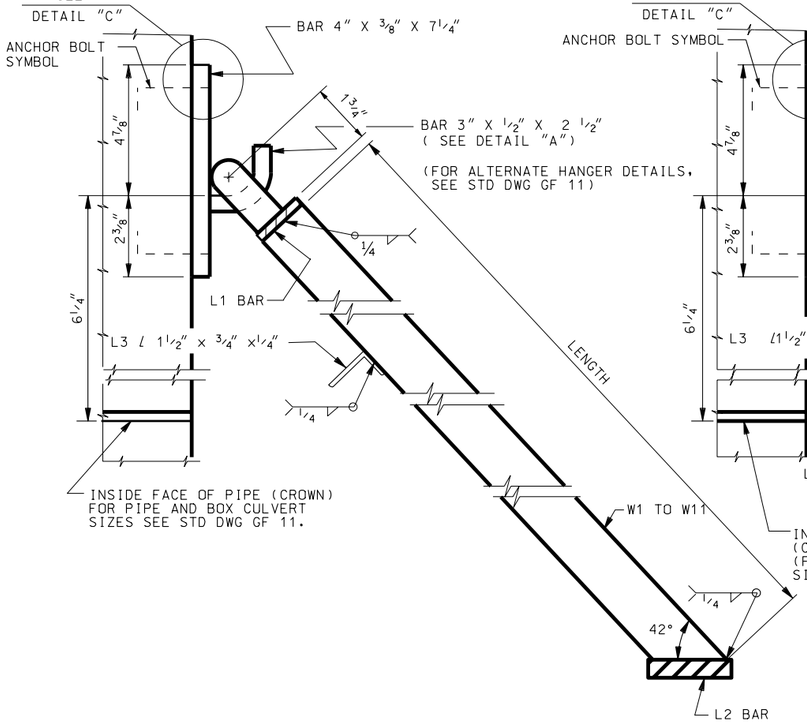

SECTION A–A

WHEN INSTALLING TRASH RACK ON CULVERT HEADWALL
USE CROWN OF CULVERT TO POSITION HANGERS ON HEADWALL

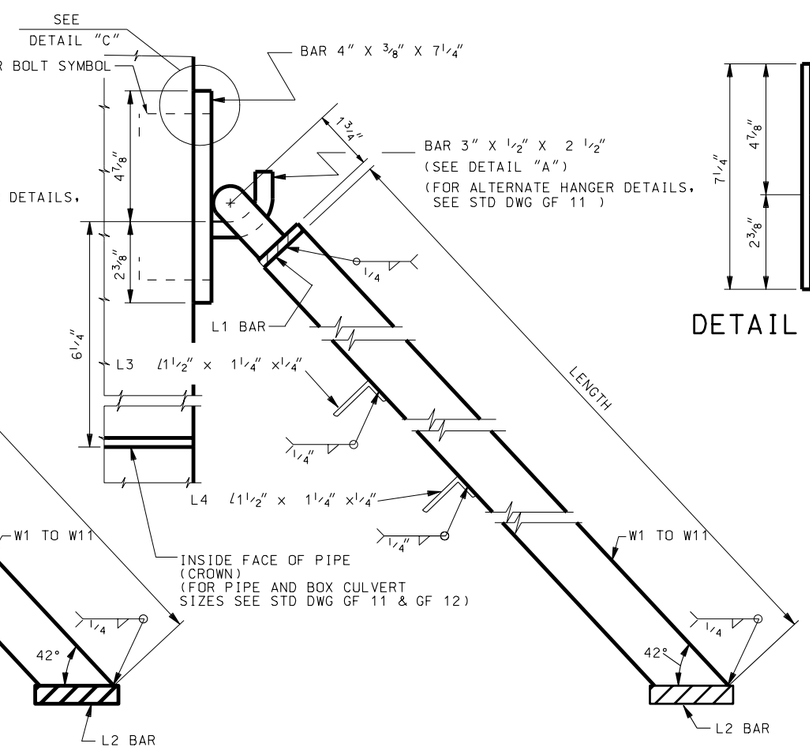

SECTION B–B

WHEN INSTALLING TRASH RACK ON CULVERT HEADWALL
USE CROWN OF CULVERT TO POSITION HANGERS ON HEADWALL

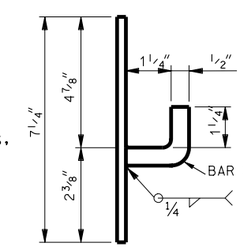

DETAIL "A"

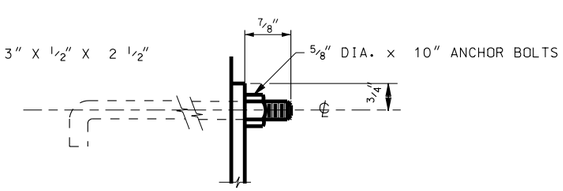

DETAIL "C"

2 ANCHOR BOLTS PER HANGER
(WEIGHT FOR BOLT & NUT 0.97 LBS.)

NOTES:

1. USE STRUCTURAL CARBON STEEL FOR ALL STRUCTURAL STEEL CONFORMING TO AASHTO DESIGNATION M 270 GRADE 36 (ASTM A 709M, GRADE 250) .
2. HOT-DIP GALVANIZE ALL STRUCTURAL STEEL AFTER FABRICATION IN ACCORDANCE WITH AASHTO DESIGNATION M 111(ASTM A 123)

DESIGN DATA

THE DESIGN IS IN ACCORDANCE WITH AASHTO AND INTERIM SPECIFICATIONS:
fs= 20,000 psi

REVISIONS				
NO.	DATE	APPR.		REMARKS

UTAH DEPARTMENT OF TRANSPORTATION
STANDARD DRAWINGS FOR ROAD AND BRIDGE CONSTRUCTION
SALT LAKE CITY, UTAH

RECOMMENDED FOR APPROVAL — JULY 03,2002 DATE
CHAIRMAN STANDARDS COMMITTEE APPROVED — JULY 03,2002 DATE
DEPUTY DIRECTOR

STANDARD DRAWING TITLE
STANDARD TRASH RACKS
90° X-ING L

STD DWG
GF 10