SHELF

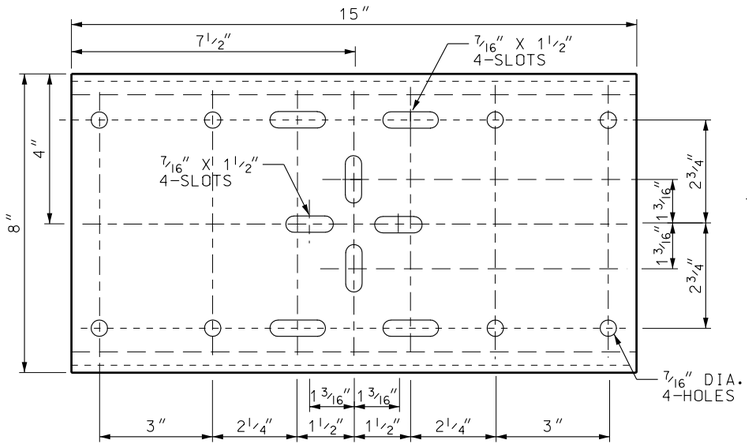

PLATFORM

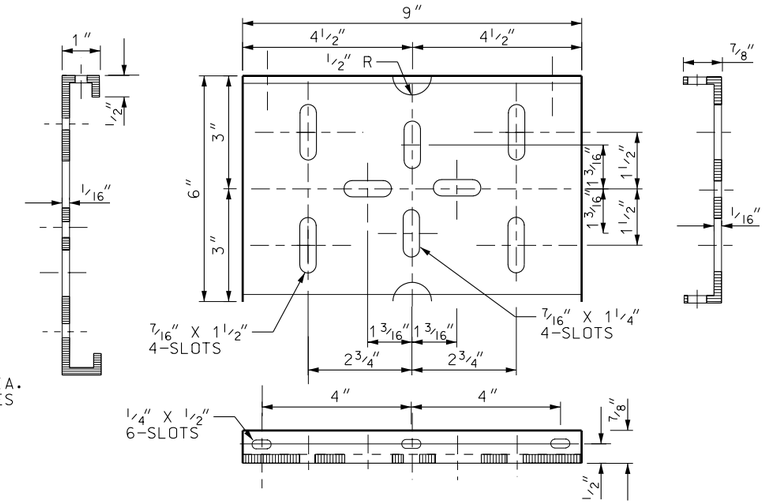

CANTILEVERED MAILBOX SUPPORT

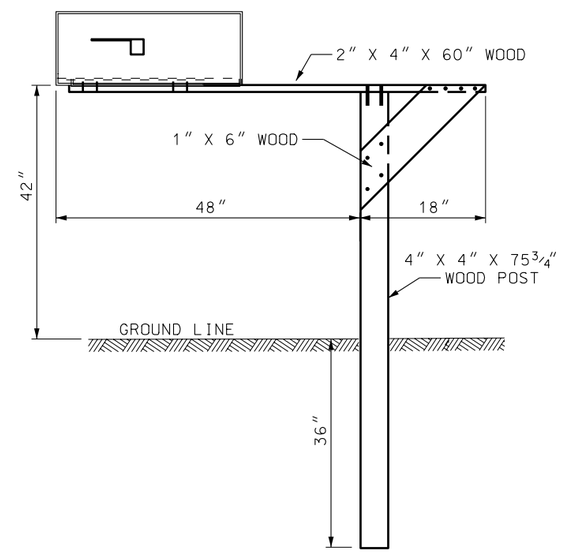

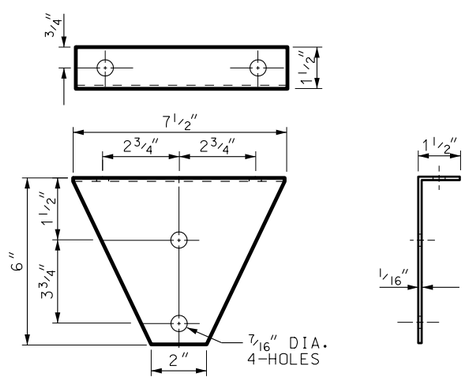

BRACKET

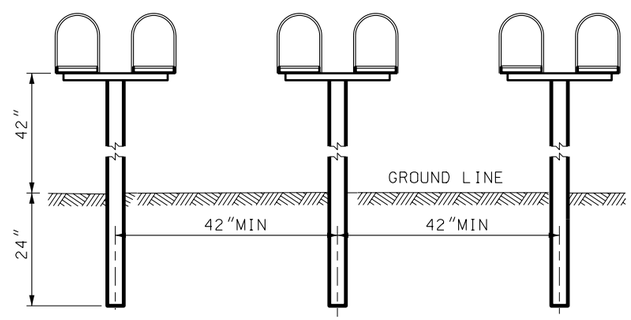

SPACING FOR MULTIPLE POST INSTALLATION

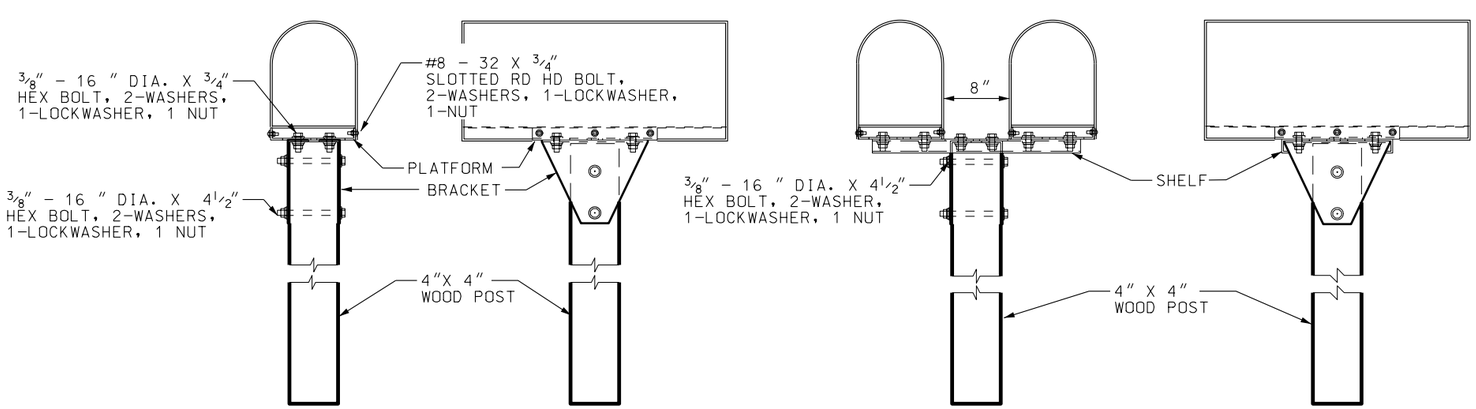

SINGLE AND DOUBLE MAILBOX ASSEMBLIES
SERIES A

NOTE:

1. USE OF ALTERNATE SYSTEMS MEETING NCHRP-350 REQUIREMENTS ALLOWED AS APPROVED BY THE REGION TRAFFIC ENGINEER.

NO.	DATE	APPR.	REMARKS

REVISIONS

UTAH DEPARTMENT OF TRANSPORTATION
STANDARD DRAWINGS FOR ROAD AND BRIDGE CONSTRUCTION
SALT LAKE CITY, UTAH

RECOMMENDED FOR APPROVAL — JULY 03,2002 DATE

CHAIRMAN STANDARDS COMMITTEE APPROVED — JULY 03,2002 DATE

DEPUTY DIRECTOR

STANDARD DRAWING TITLE: NEWSPAPER AND MAILBOX SUPPORT HARDWARE

STD DWG
GW 8