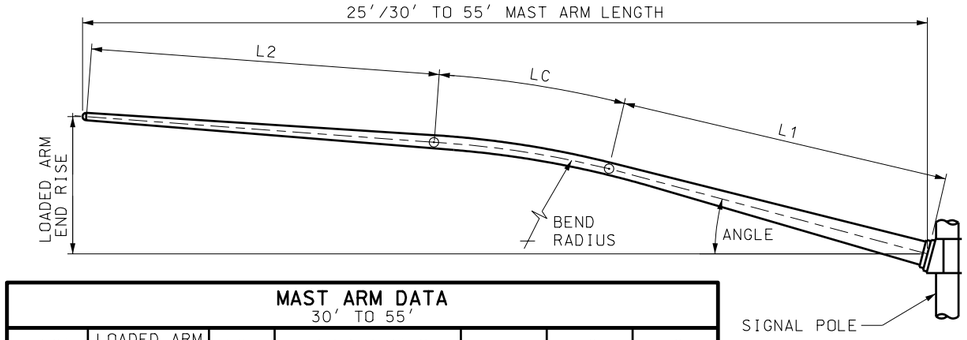


| MAST ARM DATA 30' TO 55' | | | | | | |
|---|---|---|---|---|---|---|
| LENGTH | LOADED ARM END RISE | ANGLE | BEND RADIUS | L1 | LC | L2 |
| 30' | 5'- 6" | 16° | 25' | 15.79' | 6.33' | 8.80' |
| 35' | 5'- 6" | 16° | 70' | 10.07' | 17.72' | 7.86' |
| 40' | 5'- 6" | 16° | 70' | 9.75' | 17.10' | 13.78' |
| 45' | 5'- 6" | 16° | 70' | 9.58' | 16.49' | 19.57' |
| 50' | 6'- 0" | 13° | 70' | 15.95' | 14.05' | 20.66' |
| 55' | 6'- 0" | 13° | 70' | 15.67' | 13.44' | 26.56' |

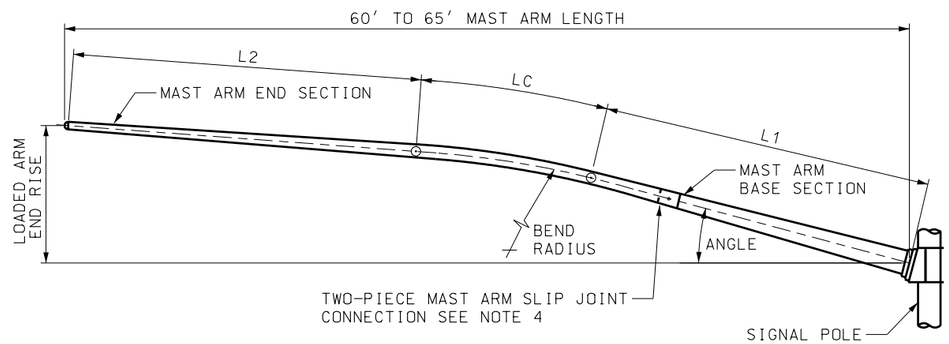


| SIGNAL ARM DATA 60' AND 65' | | | | | | | | |
|---|---|---|---|---|---|---|---|---|
| LENGTH | LOADED ARM END RISE | ANGLE | BASE SECTION | END SECTION | BEND RADIUS | L1 | LC | L2 |
| 60' | 6'- 0" | 12° | 18.49' | 44.87' | 70' | 21.38' | 10.38' | 28.86' |
| 65' | 6'- 0" | 12° | 18.49' | 49.87' | 70' | 21.33' | 9.77' | 34.55' |

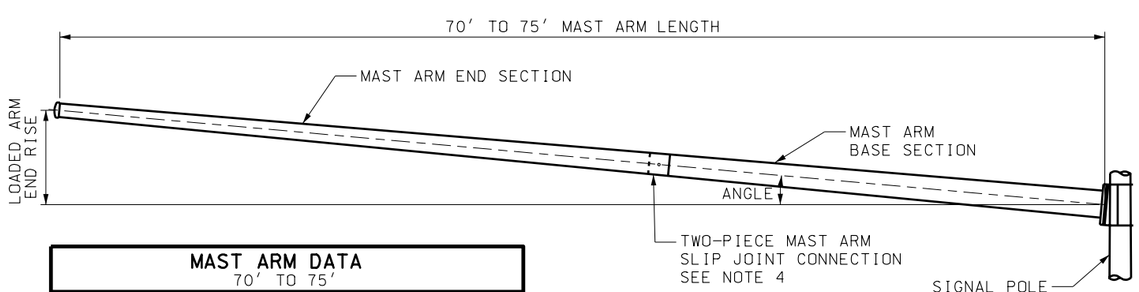


| MAST ARM DATA 70' TO 75' | | | | |
|---|---|---|---|---|
| LENGTH | LOADED ARM END RISE | ANGLE | BASE SECTION | END SECTION |
| 70' | 1'- 6" | 4° | 30.07' | 42.44' |
| 75' | 1'- 10" | 4° | 30.07' | 47.44' |

## NOTES:

1. SEE STD DWG SL 1A FOR SIGNAL POLE AND MAST ARM NOTES.
2. PROVIDE AND INSTALL SIGNAL HEAD BRACKET MOUNT.
3. FIELD DRILL 1½" DIAMETER WIRING HOLE ALONG THE HORIZONTAL CENTROID OF THE MAST ARM AT EACH SIGNAL HEAD LOCATION. DEBURR AND INSTALL NEOPRENE GROMMET FOR WIRE PROTECTION PRIOR TO INSTALLING SIGNAL HEAD BRACKET.
4. FIELD ASSEMBLE TWO-PIECE MAST ARM SLIP JOINT TO ACHIEVE A SNUG FIT. APPLY ANTI-SIEZE COMPOUND AND PROVIDE MINIMUM OVERLAP NOT LESS THAN 1.5 TIMES INSIDE DIAMETER OF END SECTION.

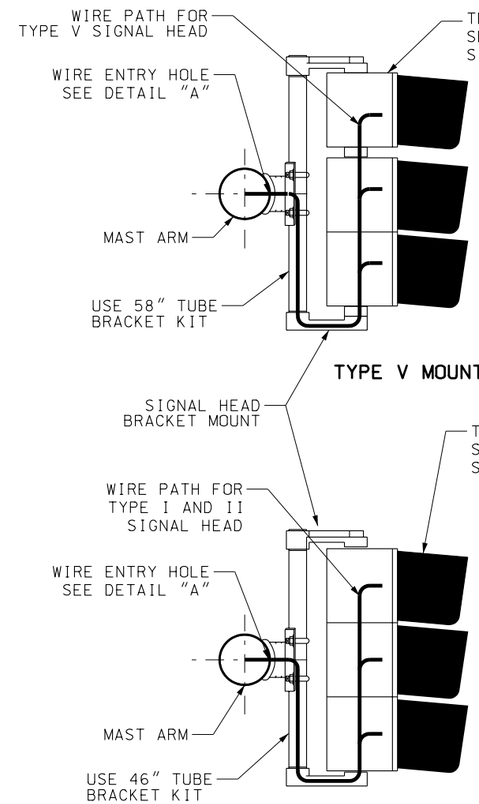


TYPE V MOUNT

TYPE I AND II MOUNT

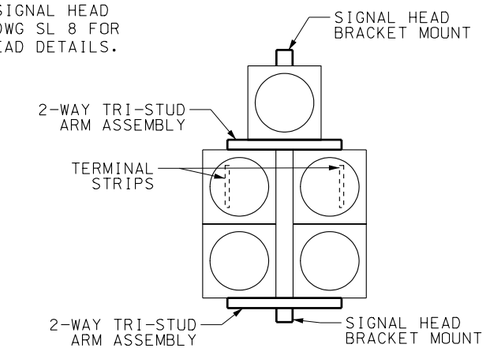


TYPE V CONFIGURATION

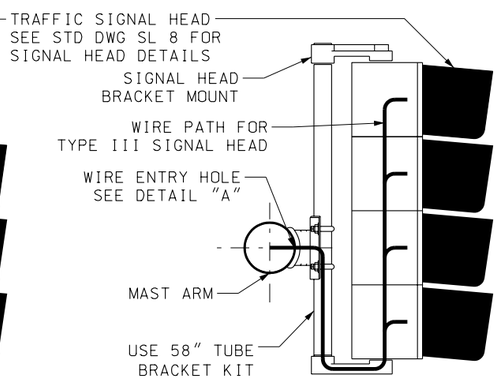


TYPE III MOUNT

## SIGNAL HEAD BRACKET

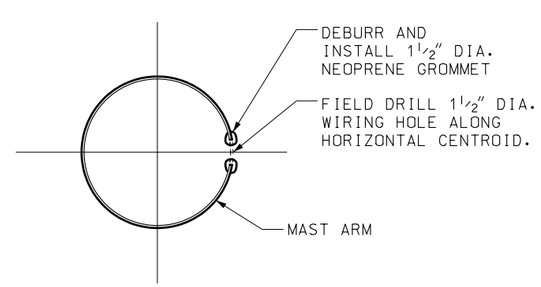


DETAIL "A"

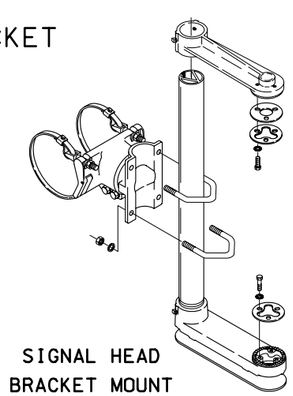

SIGNAL HEAD BRACKET MOUNT

REVISIONS

| NO. | DATE | APPR. | REMARKS |
|---|---|---|---|
| 1 | 12/18/03 | LM | ENTIRE DRAWING MODIFIED. TITLE CHANGED. |

UTAH DEPARTMENT OF TRANSPORTATION
STANDARD DRAWINGS FOR ROAD AND BRIDGE CONSTRUCTION
SALT LAKE CITY, UTAH

RECOMMENDED FOR APPROVAL — DEC.18,2003 DATE

CHAIRMAN STANDARDS COMMITTEE APPROVED — DEC.18,2003 DATE

DEPUTY DIRECTOR

TRAFFIC SIGNAL
MAST ARM DETAIL
30' THRU 75'

STANDARD DRAWING TITLE

STD DWG
SL 2

DGN: Files:N:\Esd\Standard.Drawings\Imperial\Approved\Change7\Approved\SL02.dgn
29-JAN-2004