TUBULAR STEEL POST (P2)

(SOCKET SYSTEM)
(SINGLE OR DOUBLE POST)

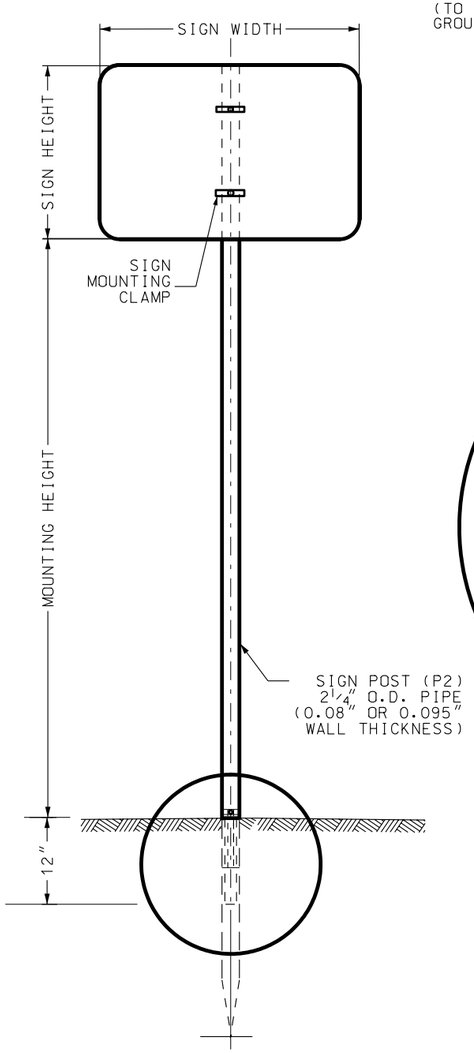

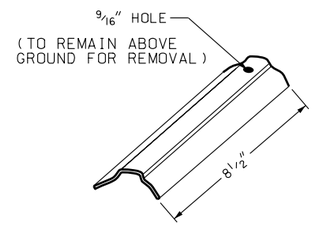

WEDGE

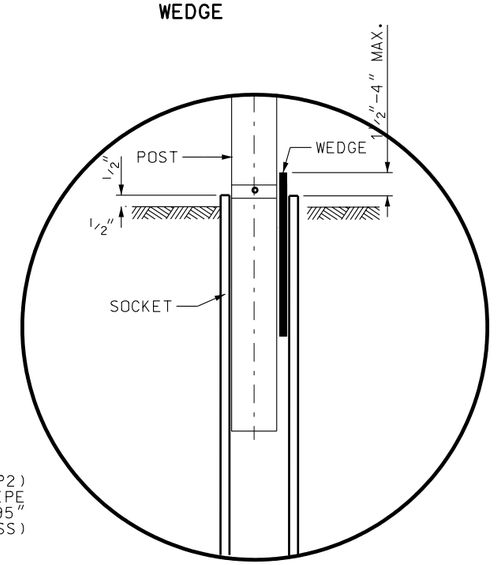

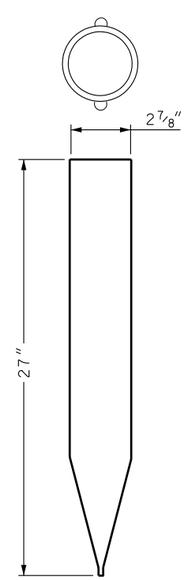

TUBULAR SOCKET

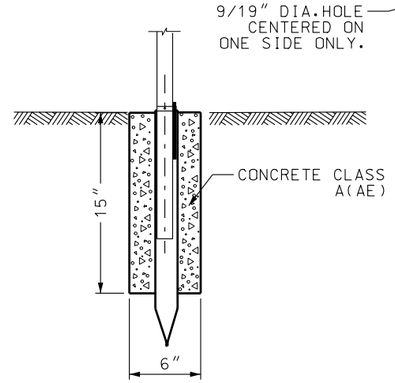

CONCRETE FOUNDATION

SEE NOTE 1

WEDGE

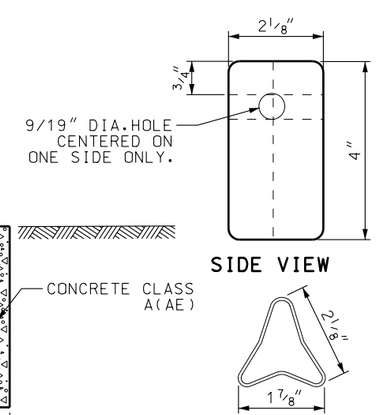

SIDE VIEW

TOP VIEW

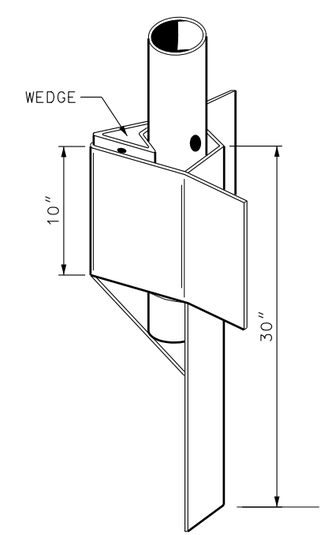

TRANGULAR STEEL SIGN POST ANCHOR

SEE NOTE 1

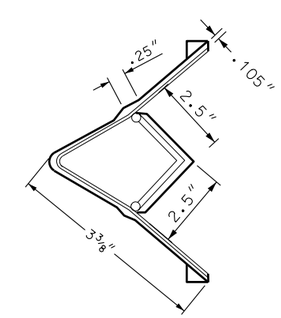

TOP VIEW

POST NOTES:

POSTS PRE-PUNCHED WITH ⅜" HOLES. MOUNT SIGN DIRECTLY TO POST OR USE AN APPROVED MOUNTING CLAMP. SPACING OF HOLES FROM TOP IN INCHES ARE AS FOLLOWS:

1",3".10",16",21",23",24",27",33",37",39" AND 45"

TUBULAR STEEL SIGN POSTS

HORIZONTAL SIGN DIMENSION (inch)

VERTICAL SIGN DIMENSION (inch)	12	24	36	48	60	72	84	96	108	120	132	144
12	1 P2	1 P2	1 P2	2 P2	2 P2	2 P2	2 P2	2 P2	2 P2	2 P2	2 P2	2 P2
18	1 P2	1 P2	1 P2	2 P2	2 P2	2 P2	2 P2	2 P2	2 P2	2 P2	2 P2	2 P2
24	1 P2	1 P2	1 P2	2 P2	2 P2	2 P2	2 P2	2 P2	2 P2	2 P2	1 P4	1 P4
30	1 P2	1 P2	1 P2	2 P2	2 P2	2 P2	2 P2	2 P2	1 P4	1 P4	1 P4	1 P4
36	1 P2	1 P2	1 P2	2 P2	2 P2	2 P2	1 P4	1 P4	1 P4	1 P4	1 P4	1 P4
42	1 P2	1 P2	1 P2	2 P2	2 P2	1 P4	1 P4	1 P4	2 P4	2 P4	2 P4	2 P4
48	1 P2	1 P2	2 P2	2 P2	2 P2	1 P4	1 P4	2 P4	2 P4	2 P4	2 P4	2 P4
54	1 P2	1 P2	2 P2	2 P2	1 P4	1 P4	2 P4	2 P4	2 P4	2 P4	2 P4	2 P4
60	1 P2	1 P2	2 P2	2 P2	1 P4	1 P4	2 P4	2 P4	2 P4	2 P4	2 P4	2 P4
66	1 P4	1 P4	1 P4	1 P4	1 P4	2 P4	2 P4	2 P4	2 P4	2 P4		
72	1 P4	1 P4	1 P4	1 P4	1 P4	2 P4	2 P4	2 P4	2 P4	2 P4		

LEGEND: 1 / P4 — NUMBER OF POSTS / TYPE OF POST

P2 = 2⅜"x 0.80 (SOCKET SYM.)
P4 = 2½"x SCH. 80 (SLIPBASE)
REFER TO STD DWG SN 11

NOTES:

1. FOR SOFT SOIL CONDITIONS USE TRIANGULAR STEEL SIGN POST ANCHOR OR PLACE TUBULAR SOCKET IN A 6 inch DIAMETER BY 15 inch DEEP CONCRETE FOUNDATION.
2. YELLOW POSTS MAYBE USED FOR LEFT SIDE (MEDIAN) SIGN INSTALLATIONS AND FOR SIGN LOCATIONS HAVING A HIGH PROBABLY OF IMPACTS AS DETERMINED BY THE REGION TRAFFIC ENGINEER.
3. P4 SIGN POST MAY BE USED FOR MOST SMALL AREA SIGN. CALCULATE POST NEEDS AT 30 square feet OF SIGN PER POST. SEE STANDARD FOR POST SPACING.

NO.	DATE	APPR.	REMARKS

REVISIONS

UTAH DEPARTMENT OF TRANSPORTATION
STANDARD DRAWINGS FOR ROAD AND BRIDGE CONSTRUCTION
SALT LAKE CITY, UTAH

RECOMMENDED FOR APPROVAL — JULY 03,2002 DATE

CHAIRMAN STANDARDS COMMITTEE APPROVED — JULY 03,2002 DATE

DEPUTY DIRECTOR

GROUND MOUNTED TUBULAR STEEL SIGN POST (P2)

STANDARD DRAWING TITLE

STD DWG
SN 9