SIGN INSTALLATION

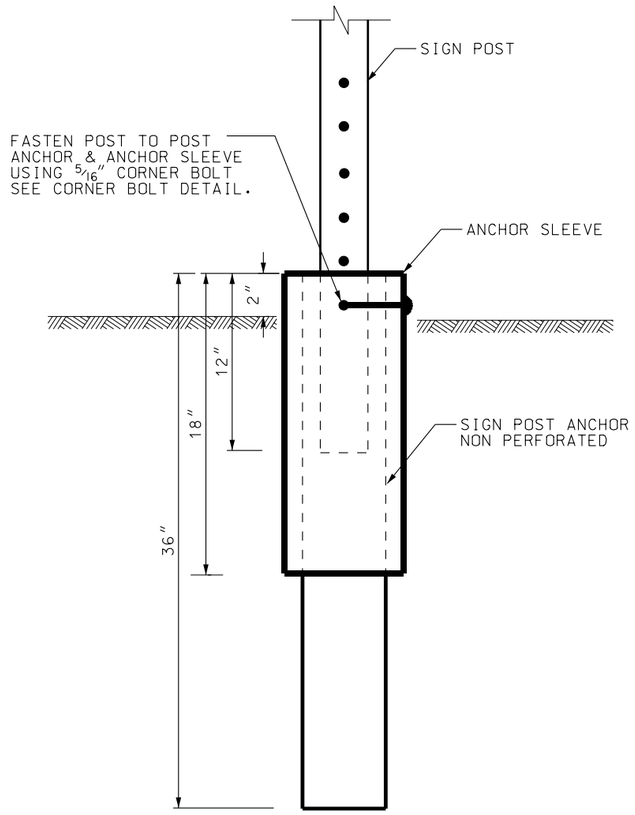

TYPICAL INSTALLATION ,
HIGH IMPACT AREAS
(TWO PIECE BREAKAWAY ANCHOR)

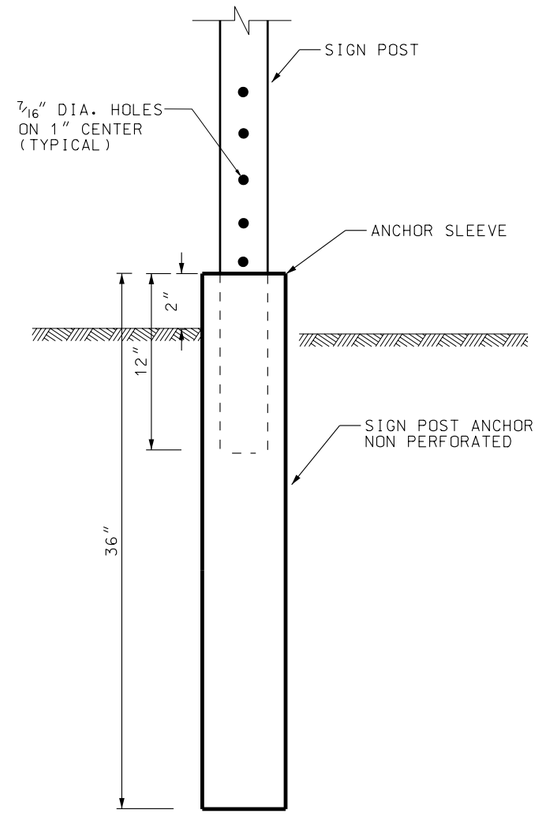

TYPICAL INSTALLATION
(W/ONE PIECE BREAKAWAY ANCHOR)

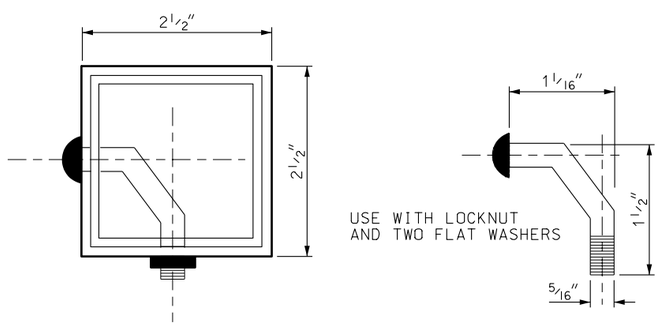

CORNER BOLT DETAIL

SQUARE STEEL SIGN POSTS

VERTICAL SIGN DIMENSION (inches) \ HORIZONTAL SIGN DIMENSION (inches)	12	24	36	48	60	72	84	96	108	120	132	144
12	1 T1	1 T1	1 T1	1 T1	2 T1	2 T1	2 T1	2 T1	2 T1	2 T1	2 T1	2 T1
18	1 T1	1 T1	1 T1	1 T1	2 T1	2 T1	2 T1	2 T1	2 T1	2 T1	2 T1	2 T2
24	1 T1	1 T1	1 T1	1 T1	2 T1	2 T1	2 T1	2 T1	2 T2	2 T2	2 T2	2 T2
30	1 T1	1 T1	1 T2	2 T1	2 T1	2 T1	2 T2	2 T2	2 T2	2 T2	2 T2	
36	1 T1	1 T1	1 T2	2 T1	2 T1	2 T2	2 T2	2 T2	2 T2			
42	1 T1	1 T2	1 T2	2 T1	2 T2	2 T2	2 T2					
48	1 T1	1 T2	2 T1	2 T2	2 T2	2 T2						
54	1 T1	1 T2	2 T2	2 T2	2 T2							
60	1 T1	1 T2	2 T2	2 T2								
66	1 T1	1 T2	2 T2									
72	1 T1	1 T2	2 T2									

T1 = 2" 12 GAUGE W/2 1/4" ANCHOR, 2 1/2" SLEEVE
T2 = 2 1/2" 12 GAUGE W/3/4" ANCHOR, 3" SLEEVE

1. FOR SOFT SOIL USE TRIANGULAR STEEL SIGN POST ANCHOR: REFER TO STD DWG SN 12

REVISIONS

NO.	DATE	APPR.	REMARKS

UTAH DEPARTMENT OF TRANSPORTATION
STANDARD DRAWINGS FOR ROAD AND BRIDGE CONSTRUCTION
SALT LAKE CITY, UTAH

RECOMMENDED FOR APPROVAL — JULY 03,2002 DATE
CHAIRMAN STANDARDS COMMITTEE APPROVED — JULY 03,2002 DATE
DEPUTY DIRECTOR

GROUND MOUNTED SQUARE STEEL SIGN POST (P3)
STANDARD DRAWING TITLE

STD DWG
SN 10