NOTES:

1. SEE STD DWG SN 6 FOR GENERAL NOTES.
2. USE 18-8 STAINLESS STEEL FOR THE 1/4" R.H. MACHINE SCREWS AND WASHERS AND THE 3/8" BOLTS AND WASHERS USED ON THE SIGN FACE. USE CADMIUM ELECTROPLATING CONFORMING TO ASTM B 766 FOR ALL OTHER BOLTS, NUTS AND WASHERS.
3. SHOP GALVANIZE THE ENTIRE SIGN BRACING ASSEMBLY, STEEL SIGN POST AND U-BOLTS TO MEET AASHTO M 111 (ASTM A 123).
4. USE ASTM A 107, GRADE 1020 MERCHANT QUALITY FOR U-BOLT.
5. USE BOTH 1/4" FLAT WASHERS AND 1/4" LOCK WASHERS ON ALL 1/4" R.H. SCREWS. USE LOCK WASHERS ON ALL BOLTS.

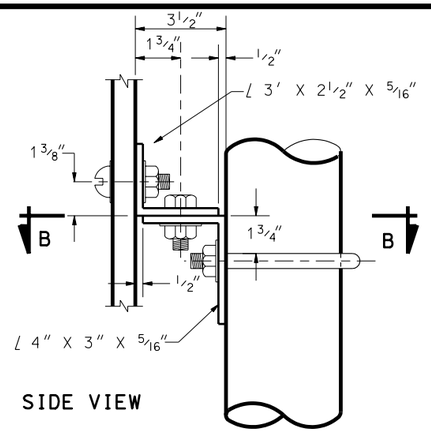

SIDE VIEW

BRACKET DETAIL
(FOR PIPE COLUMNS)

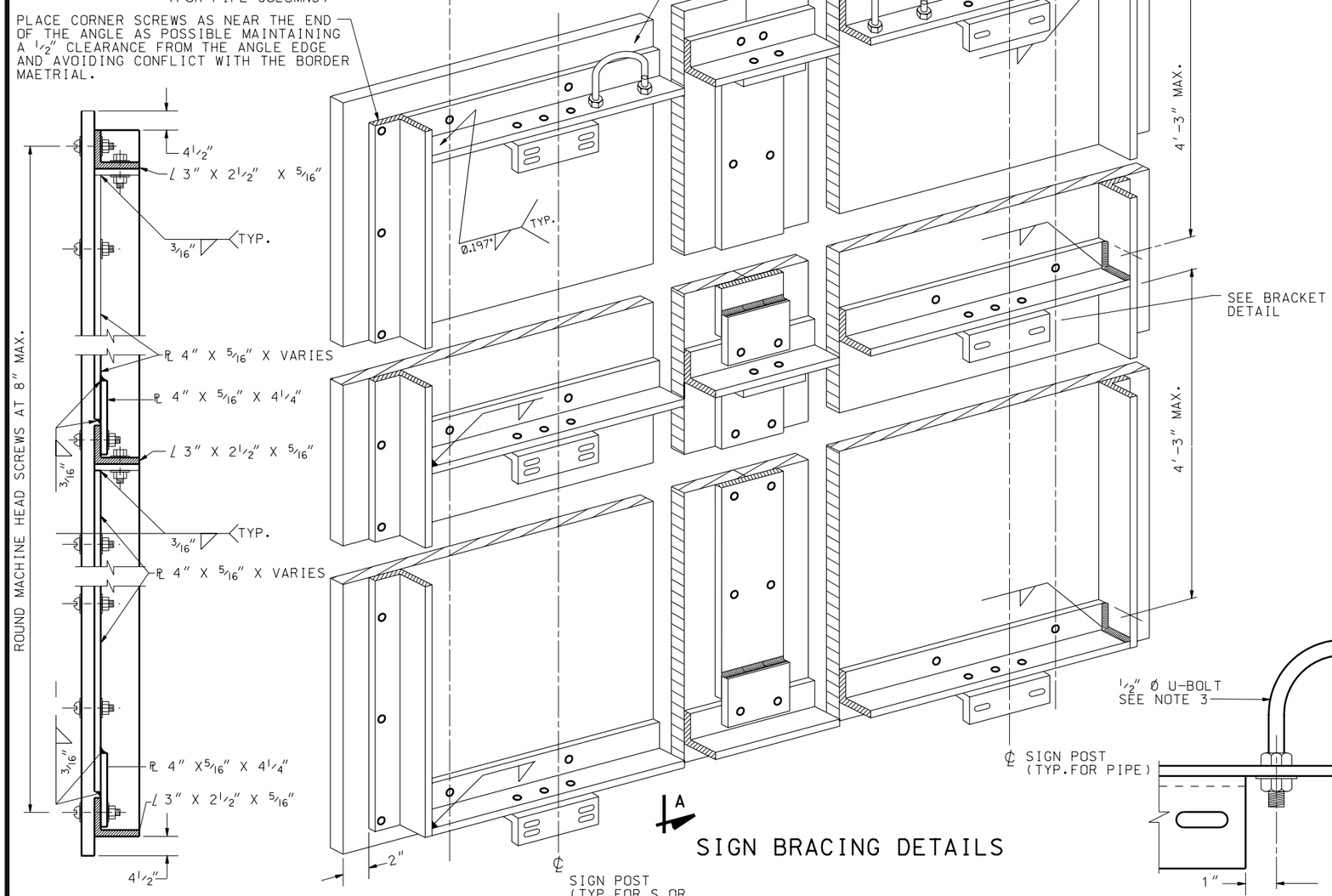

SIGN BRACING DETAILS

SECTION A-A

HANDLING BRACKET DETAIL

SIDE VIEW

BRACKET DETAIL
(FOR S OR W COLUMNS)

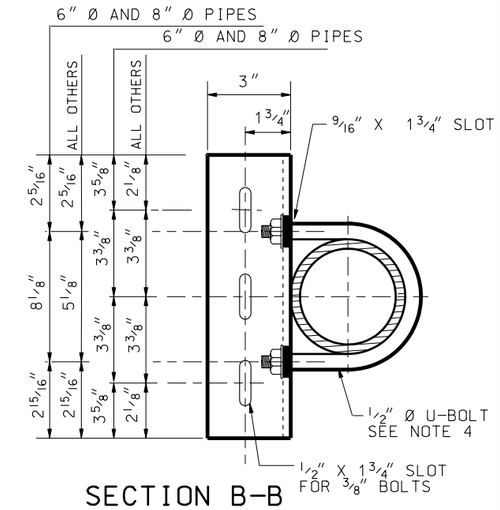

SECTION B-B

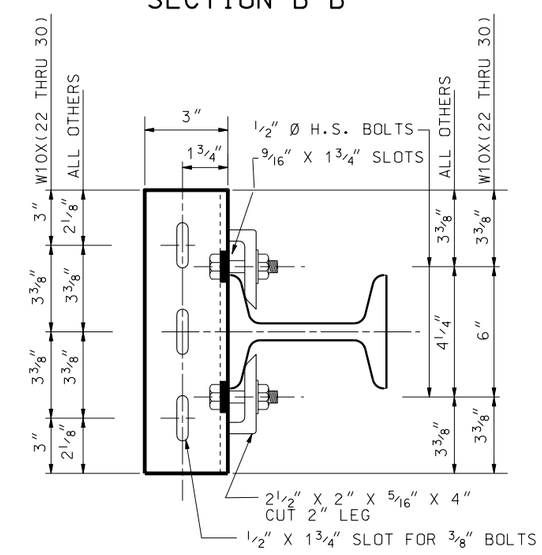

SECTION C-C

NO.	DATE	APPR.	REMARKS

REVISIONS

UTAH DEPARTMENT OF TRANSPORTATION
STANDARD DRAWINGS FOR ROAD AND BRIDGE CONSTRUCTION
SALT LAKE CITY, UTAH

RECOMMENDED FOR APPROVAL — JULY 03,2002 DATE

CHAIRMAN STANDARDS COMMITTEE APPROVED — JULY 03,2002 DATE

DEPUTY DIRECTOR

GROUND MOUNTED SIGN INSTALLATION DETAILS

STANDARD DRAWING TITLE

STD DWG
SN 12C