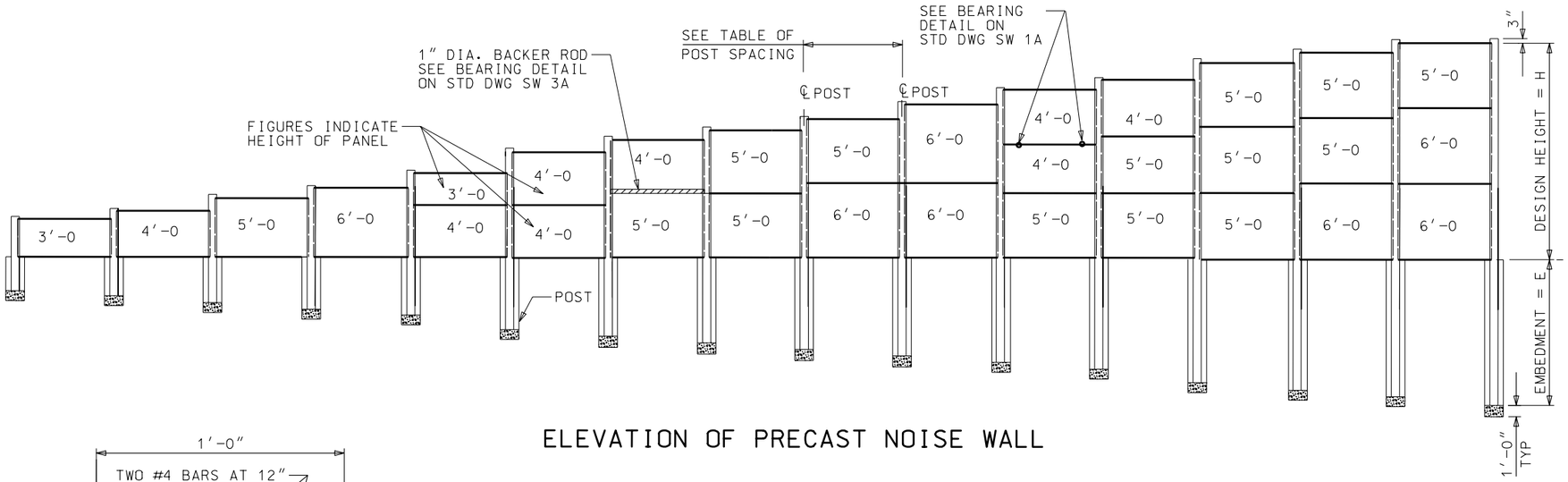

ELEVATION OF PRECAST NOISE WALL

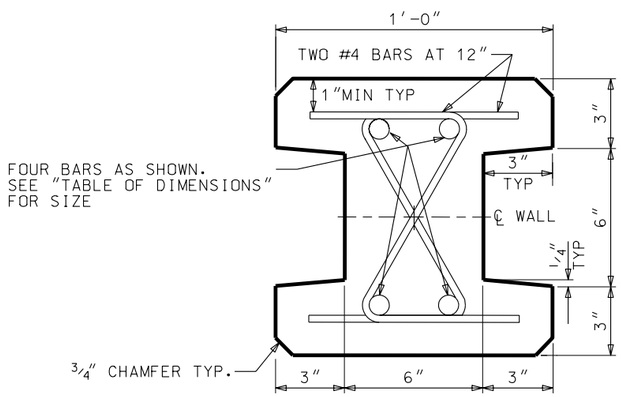

SECTION THRU TYPE I POST
θ = 0° TO 10°

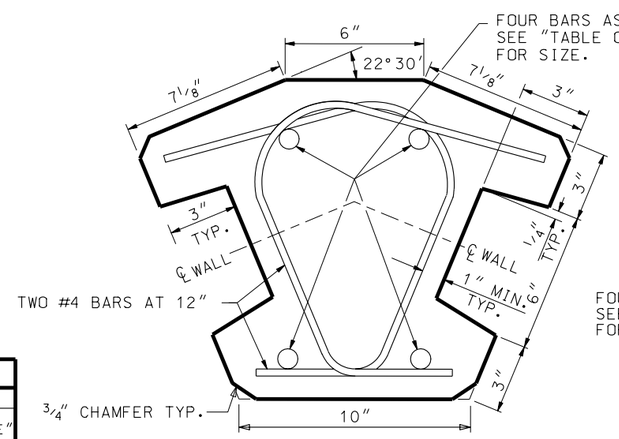

SECTION THRU TYPE II POST
FOR θ = 35° TO 55°

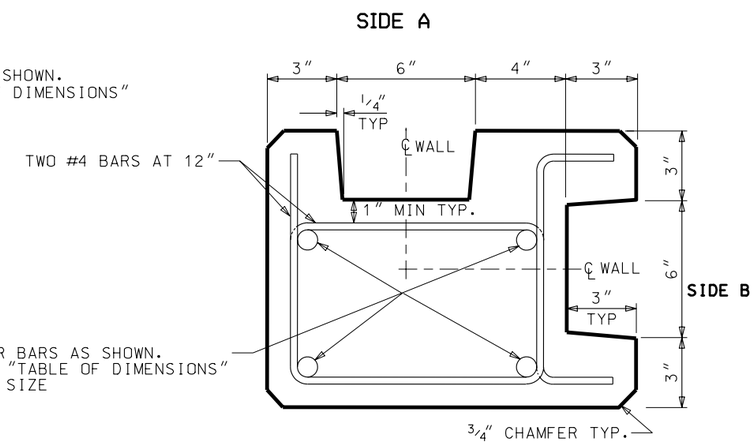

SECTION THRU TYPE III POST
θ= 80° TO 100°

TABLE OF DIMENSIONS

DESIGN H	PANEL HEIGHT			POST	
H	TOP PANEL	CENTER PANEL	BOTTOM PANEL	VERTICAL BAR SIZE	EMBEDMENT "E"
3'	3'			#5	1'-6
4'	4'			#5	2'-0
5'	5'			#5	2'-6
6'	6'			#5	3'-0
7'	3'		4'	#5	3'-6
8'	4'		4'	#5	4'-0
9'	4'		5'	#5	4'-6
10'	5'		5'	#5	5'-0
11'	5'		6'	#6	5'-6
12'	6'		6'	#6	6'-0
13'	4'	4'	5'	#7	6'-6
14'	4'	5'	5'	#7	7'-0
15'	5'	5'	5'	#8	7'-6
16'	5'	5'	6'	#9	8'-0
17'	5'	6'	6'	#9	8'-6

POST SPACING

℄ POST TO ℄ POST	REQ'D SPACING
TYPE I	12'-0
TYPE I TO TYPE II	12'-2
TYPE I TO TYPE III SIDE A	12'-0
TYPE I TO TYPE III SIDE B	12'-4
TYPE II TO TYPE II	12'-4
TYPE II TO TYPE III SIDE A	12'-4
TYPE II TO TYPE III SIDE B	12'-6
TYPE III SIDE A TO TYPE III SIDE A	12'-0
TYPE III SIDE A TO TYPE III SIDE B	12'-4
TYPE III SIDE B TO TYPE III SIDE B	12'-8

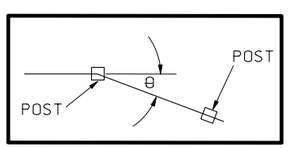

REVISIONS

NO.	DATE	APPR.	REMARKS
1	10/30/02	F.W.	CORRECTED STD DWG CALLOUT IN "ELEVATION OF PRECAST NOISE WALL" DETAIL TO SW 3A
2	12/19/02	B.W.	CORRECTED THE TO DEGREE IN SECTION THRU TYPE I POST

UTAH DEPARTMENT OF TRANSPORTATION
STANDARD DRAWINGS FOR ROAD AND BRIDGE CONSTRUCTION
SALT LAKE CITY, UTAH

RECOMMENDED FOR APPROVAL — DEC.19,2002 DATE
CHAIRMAN STANDARDS COMMITTEE APPROVED — DEC.19,2002 DATE
DEPUTY DIRECTOR

PRECAST CONCRETE NOISE WALL 2 OF 2
STANDARD DRAWING TITLE

STD DWG
SW 3B