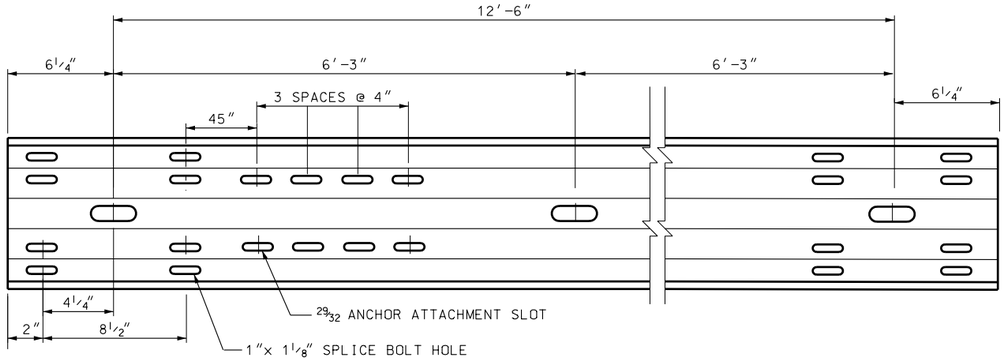

RAIL ELEMENT

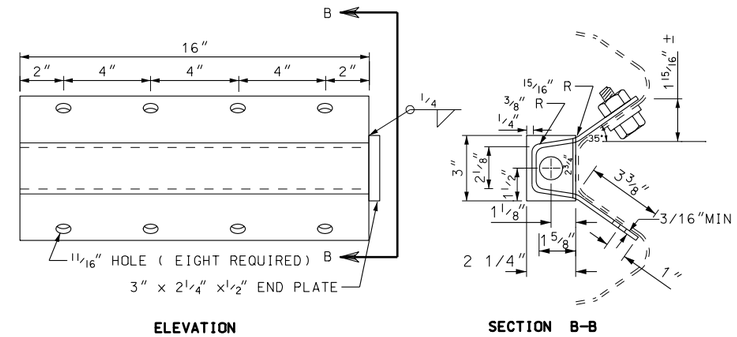

ELEVATION

SECTION B-B

ANCHOR PLATE

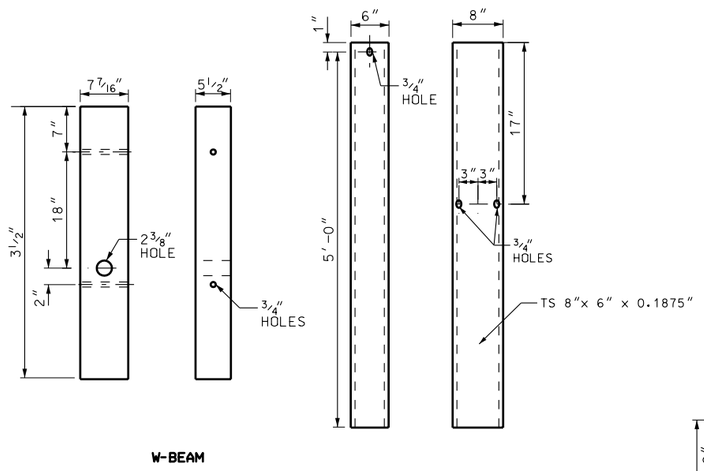

W-BEAM

WOOD BREAKAWAY POST

FOUNDATION TUBE

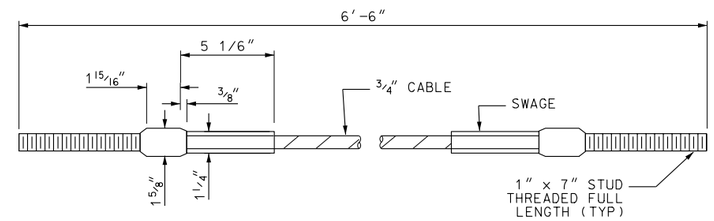

ANCHOR CABLE

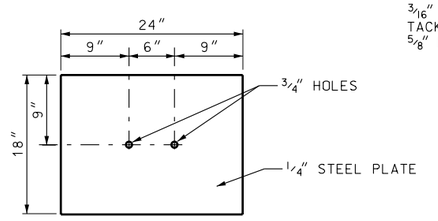

SOIL PLATE

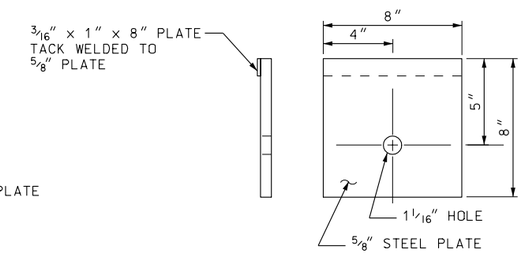

BEARING PLATE

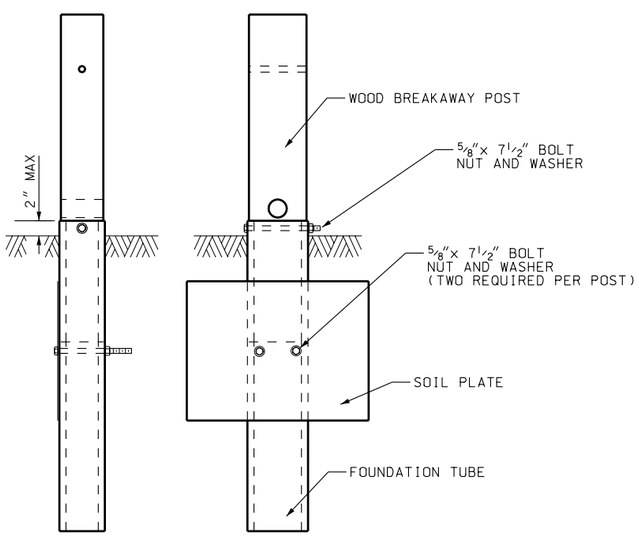

ANCHOR POST ASSEMBLY

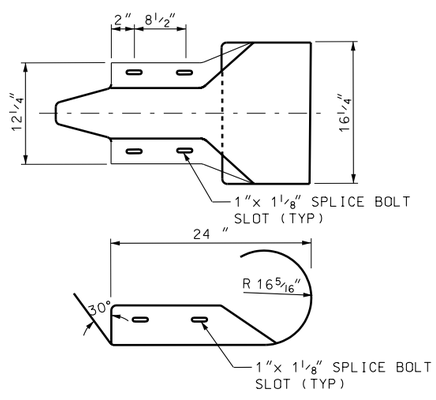

END SECTION (ROUNDED)

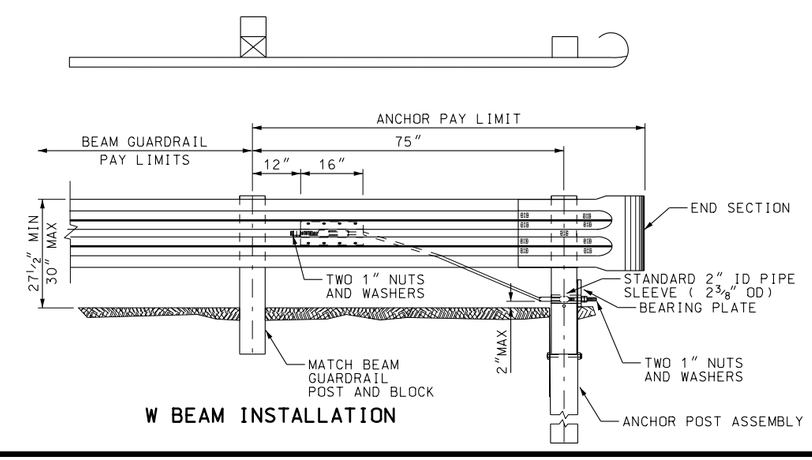

W BEAM INSTALLATION

REVISIONS

NO.	DATE	APPR.	REMARKS

UTAH DEPARTMENT OF TRANSPORTATION
STANDARD DRAWINGS FOR ROAD AND BRIDGE CONSTRUCTION
SALT LAKE CITY, UTAH

RECOMMENDED FOR APPROVAL — DEC.19,2002 DATE

CHAIRMAN STANDARDS COMMITTEE APPROVED — DEC.19,2002 DATE

DEPUTY DIRECTOR

BEAM GUARDRAIL ANCHOR TYPE 1

STANDARD DRAWING TITLE

STD DWG

BA 4C

DGN File: N:\Esd\Standard_Drawings\Imperial\Approved\Barriers (BA)\ba04c.dgn

08-OCT-2003