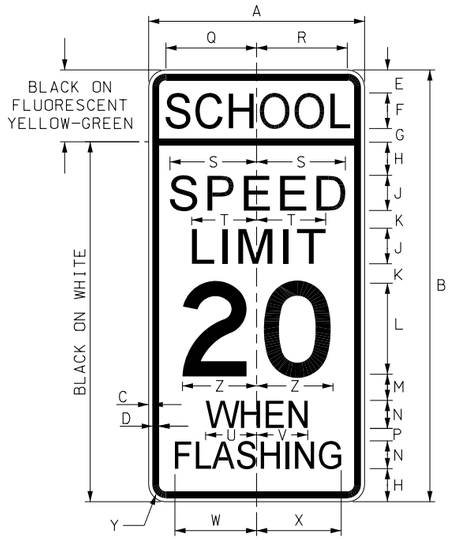

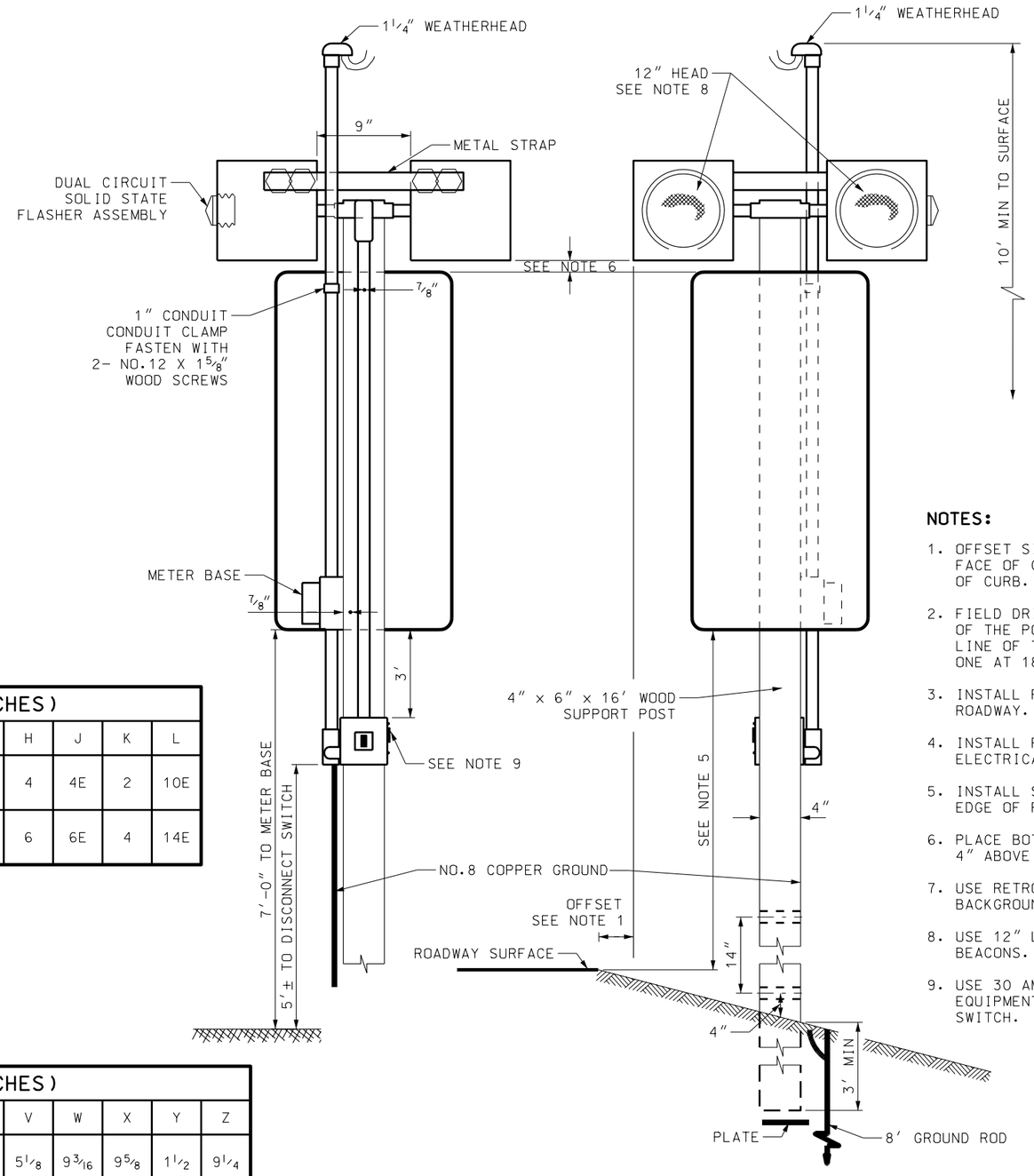

SIGN	DIMENSION (INCHES)										
	A	B	C	D	E	F	G	H	J	K	L
CONVENTIONAL ROAD	24	48	3/8	5/8	2 1/2	4D	1 1/2	4	4E	2	10E
SPECIAL	36	72	5/8	7/8	3 3/4	6D	2 1/4	6	6E	4	14E

SIGN	DIMENSION (INCHES)											
	M	N	P	R	S	T	U	V	W	X	Y	Z
CONVENTIONAL ROAD	3	2 1/2 D	2	10 1/4	9 9/16	7 7/16	5 3/16	5 1/8	9 3/16	9 5/8	1 1/2	9 1/4
SPECIAL	4	4D	2	15 3/8	14 3/8	11	6 15/16	6 13/16	12 1/4	12 7/8	2 1/4	13 7/8

NOTES:

1. OFFSET SIGN ASSEMBLY A MINIMUM OF 1.5 FT. FROM FACE OF CURB OR 6 FT. FROM TRAVELED WAY IN ABSENCE OF CURB.
2. FIELD DRILL TWO 1 1/2" DIAMETER HOLES IN THE CENTER OF THE POST. DRILL PERPENDICULAR TO THE CENTER LINE OF THE ROAD. PLACE ONE HOLE AT 4 INCHES AND ONE AT 18 INCHES ABOVE GROUND LINE.
3. INSTALL FACE OF SIGN AT 90° ANGLE TO THE EDGE OF ROADWAY.
4. INSTALL POWER SUPPLY IN ACCORDANCE WITH NATIONAL ELECTRICAL CODE.
5. INSTALL SIGN 7 FEET AS MEASURED FROM THE NEAREST EDGE OF ROADWAY SURFACE TO BOTTOM OF SIGN.
6. PLACE BOTTOM OF SPEED LIMIT SIGN BEACON ASSEMBLY 4" ABOVE TOP OF SIGN.
7. USE RETROREFLECTIVE SIGN SHEETING FOR ALL BACKGROUNDS, COLORS AS NOTED.
8. USE 12" LED YELLOW BEACONS FOR SPEED LIMIT SIGN BEACONS.
9. USE 30 AMP WEATHERPROOF DISCONNECT SWITCH EQUIPMENT. GROUND NEUTRAL TO THE FRAME AT THE SWITCH.

REVISIONS

NO.	DATE	APPR.	REMARKS
1	10/31/02	G.S.	UPDATED THE BREAKAWAY HOLE HEIGHT REQUIREMENT TO AASHTO STANDARD IN NOTE 2 AND DETAIL
2	10/14/03	J.L.	UPDATED DRAWING.

UTAH DEPARTMENT OF TRANSPORTATION
STANDARD DRAWINGS FOR ROAD AND BRIDGE CONSTRUCTION
SALT LAKE CITY, UTAH

RECOMMENDED FOR APPROVAL — OCT.30,2003 DATE

CHAIRMAN STANDARDS COMMITTEE APPROVED — OCT.30,2003 DATE

DEPUTY DIRECTOR

STANDARD DRAWING TITLE

SCHOOL SPEED LIMIT ASSEMBLY

STD DWG
SN 2

DGN File: N:\Esa\Standard_Drawings\Imperial\Approved\Change6\approved\sn02.dgn
18-NOV-2003