2004 STANDARD DRAWINGS

http://www.udot.utah.gov/index.php/m=c/tid=728

Change 1, May 27, 2004

Memorandum UTAH DEPARTMENT OF TRANSPORTATION

DATE: May 27, 2004

TO: Region Directors
Project Engineers
Project Design Engineers
Project Managers
Consultants and Contractors

FROM: Barry Axelrod, CDT
Standards and Specifications

SUBJECT: Standard Drawing [U.S. Standard Unit (Inch-Pound Units)] Change 1 Dated May 27, 2004

A new index and updated drawings are attached. Please take the following action with respect to the attached pages.

REMOVE	INSERT
Cover	Cover - revised for Change One
N/A	Memo - Insert after cover
Index	Index - revised
N/A	Listing of Revised Standard Drawings, Change One
Sheet 1B	Sheet 1B - revised
Sheet 1C	Sheet 1C - revised
AT 2	AT 2 - revised
AT 3	AT 3 - revised
AT 8	AT 8 - revised
AT 9	AT 9 - revised
AT 10	AT 10 - revised
AT 13	AT 13 - revised
AT 14	AT 14 - revised
BA 4E	BA 4E - revised
CB 1	CB 1 - revised
DD 11	DD 11 - revised
DD 12	DD 12 - revised
DD 13	DD 13 - revised
FG 2A	FG 2A - revised
GF 5	GF 5 - revised
GW 6	GW 6 - revised
ST 3	ST 3 - revised
ST 4	ST 4 - revised
ST 6	ST 6 - revised
ST 7	ST 7 - revised
ST 8	ST 8 - revised

Electronic files for all Standards Drawings are available on the Internet from the "2004 Standards" Web page, under "2004 Standard Drawings." Individual files are available in Microstation DGN format for download individually or by Series from the "2004 Individual Standard Drawings" link. The Series files are zipped in an EXE file. The entire set of drawings is available in Adobe pdf format from the same area at the "2004 Current Drawings" link. None of the on-line files in either DGN or PDF format have signatures.

If you have any questions or problems with the electronic files contact me at 801-964-4570 or by email at baxelrod@utah.gov.

STANDARD DRAWINGS INDEX (Change 1, Dated 05/27/04)
UTAH DEPARTMENT OF TRANSPORTATION
(**Current Date for latest change in bold**)

	NUMBER	TITLE	CURRENT DATE
		Advanced Traffic Management System (AT)	
	AT 1	Legend Sheet	03/15/04
	AT 2	Ramp Meter Details	**04/29/04**
	AT 3	Ramp Meter Sign Panel	**04/29/04**
	AT 4	Typical Ramp Meter Signal Head Mounting	03/15/04
	AT 5	Loop Installation	03/15/04
	AT 6	Conduit Details	03/15/04
	AT 7	Polymer-Concrete Junction Box Details	03/15/04
	AT 8	ATMS Cabinet w/120V Disconnect	**04/29/04**
	AT 9	ATMS Cab With Stepdown Transformer	**04/29/04**
	AT 10	Domed CCTV Details	**04/29/04**
	AT 11	CCTV Pole Details	03/15/04
	AT 12	CCTV Pole Foundation For Dedicated CCTV Pole	03/15/04
	AT 13	120V VMS Cab Foundation Details	**04/29/04**
	AT 14	Weigh In Motion Piezo Details	**04/29/04**
	AT 15	RWIS Site And Foundation Details	03/15/04
	AT 16	RPU Tower Base And Service Pad Layout	03/15/04
	AT 17	Ground Rod Installation And Tower Grounding	03/15/04
		Barriers (BA)	
	BA 1A	Precast Concrete Full Barrier Standard Section	03/15/04
	BA 1B	Precast Concrete Full Barrier Standard Section	03/15/04
	BA 2	Precast Concrete Half Barrier Standard Section	03/15/04
	BA 3	Cast In Place Constant Slope Barrier	03/15/04
	BA 4A	W-Beam Guardrail Hardware	03/15/04
	BA 4B	W-Beam Guardrail Transition With Jersey Barrier Shape	03/15/04
	BA 4C	Not Used	

	NUMBER	TITLE	CURRENT DATE
	BA 4D	W-Beam Guardrail Anchor Type I	03/15/04
	BA 4E	W-Beam Guardrail Installations	**04/29/04**
	BA 4F	W-Beam Guardrail Typicals Divided Roadways	03/15/04
	BA 4G	W-Beam Guardrail Typical Multilane Arterial	03/15/04
	BA 4H	W-Beam Guardrail Typical 2 Lane 2 Way	03/15/04
	BA 4I	W-Beam Guardrail Buried In Backslope Terminal	03/15/04
	BA 4J	W-Beam Guardrail Buried In Backslope Terminal With Rub Rail	03/15/04
	BA 4K	W-Beam Guardrail Buried In Backslope Terminal Anchor	03/15/04
	BA 4L	W-Beam Guardrail Curve Details	03/15/04
	BA 4M	W-Beam Guardrail Nested Guardrail 12’ 6” Span	03/15/04
	BA 4N	W-Beam Guardrail Nested Guardrail 18’ 9” Span	03/15/04
	BA 4O	W-Beam Guardrail Nested Guardrail 25” Span	03/15/04
	BA 4P	W-Beam Guardrail With Precast Barrier For Span > 25’	03/15/04
		Catch Basins And Cleanouts (CB)	
	CB 1	Standard Catch Basin	**04/29/04**
	CB 2	Curb Inlet Catch Basin	03/15/04
	CB 3	Standard Transition Concrete Lined Ditch To Pipe Or Diversion Box	03/15/04
	CB 4	Solid Cover For Standard Drawing DB 1 MS-18 Loading	03/15/04
	CB 5	Standard Screw Gate And Frame	03/15/04
	CB 6A	Standard Drop Inlet Details General Notes And Installation Details	03/15/04
	CB 6B	Standard Catch Basin And Cleanout Box Drop Inlet Type “A” Details	03/15/04
	CB 6C	Standard Catch Basin And Cleanout Box Drop Inlet Type “B” Details	03/15/04
	CB 6D	Standard Catch Basin And Cleanout Box Drop Inlet Type “C” Details	03/15/04
	CB 6E	Standard Catch Basin And Cleanout Box Drop Inlet With Attached Apron Details	03/15/04
	CB 6F	Standard Catch Basin And Cleanout Box Drop Inlet With Attached Apron Details	03/15/04
	CB 6G	Standard Catch Basin And Cleanout Box Drop Inlet Type “D” Details	03/15/04

	NUMBER	TITLE	CURRENT DATE
	CB 6H	Standard Catch Basin And Cleanout Box Drop Inlet Type "D" Tables	03/15/04
	CB 7	Standard Curb And Gutter Drop Inlet	03/15/04
	CB 8A	Double Catch Basin	03/15/04
	CB 8B	Double Catch Basin	03/15/04
	CB 9A	Standard Catch Basin And Cleanout Box Situation And Layout	03/15/04
	CB 9B	Standard Catch Basin And Cleanout Box Section Details	03/15/04
	CB 9C	Standard Catch Basin And Cleanout Box Schedule Of Installation 18" to 42" RCP 12" to 48" CMP	03/15/04
	CB 9D	Standard Catch Basin And Cleanout Box Schedule Of Installation 48" to 66" RCP 60" to 78" CMP	03/15/04
	CB 10A	Standard Catch Basin And Cleanout Box Situation And Layout	03/15/04
	CB 10B	Standard Catch Basin And Cleanout Box Section Details	03/15/04
	CB 10C	Standard Catch Basin And Cleanout Box Schedule Of Installation 42" to 60" RCP 48" to 72" CMP	03/15/04
		Crash Cushions (CC)	
	CC 1	Crash Cushion Markings	03/15/04
	CC 2	Crash Cushion Drainage Details Guideline A	03/15/04
	CC 3	Crash Cushion Drainage Details Guideline B	03/15/04
	CC 4	Details For Placement Crash Cushions Type A, B, And D	03/15/04
	CC 5	Grading And Placement Details Crash Cushion Type C	03/15/04
	CC 6	Crash Cushion Type E Sand Barrel Details	03/15/04
	CC 7	Grading And Installation Details Crash Cushion Type F	03/15/04
	CC 8	Grading And Installation Details Crash Cushion Type G	03/15/04
	CC 9A	Grading And Installation Details Crash Cushion Type H	03/15/04
	CC 9B	Grading And Installation Details Crash Cushion Type H	03/15/04
		Diversion Boxes (DB)	
	DB 1A	Standard Diversion Box/Cover Plate/Grating For 18" DIA. or 24" DIA. Pipe	03/15/04
	DB 1B	Standard Diversion Box Hinged Lid Details For 18" DIA. or 24" DIA. Pipe	03/15/04
	DB 1C	Standard Diversion Box Bicycle - Safe Grating Details For 18" DIA. or 24" DIA. Pipe	03/15/04

	NUMBER	TITLE	CURRENT DATE
	DB 1D	Standard Diversion Box Three Gate Box Sections For 18” DIA. or 24” DIA. Pipe	03/15/04
	DB 1E	Standard Diversion Box Three Gate Box Sections For 18” DIA. or 24” DIA. Pipe	03/15/04
	DB 1F	Standard Diversion Box Three Gate Box Sections For 18” DIA. or 24” DIA. Pipe	03/15/04
	DB 2A	Standard Diversion Box w/Interchangeable Walls, Bottom Slab, Walls And Apron Details	03/15/04
	DB 2B	Standard Diversion Box w/Interchangeable Walls, Quantities Schedule	03/15/04
	DB 2C	Standard Diversion Box w/Interchangeable Walls, Hand Slide Gate Details	03/15/04
	DB 2D	Standard Diversion Box Type “G” Hand Slide Details	03/15/04
	DB 2E	Standard Diversion Box Hinged Lid (Solid Cover Plate) Type “A” Details Type I Plan	03/15/04
	DB 2F	Standard Diversion Box Hinged Lid (Solid Cover Plate) Type “A” Details Type II Plan	03/15/04
	DB 2G	Standard Diversion Box Hinged Lid Solid Cover Type “B” Details	03/15/04
	DB 2H	Standard Diversion Box Hinged Lid Solid Cover Type “B” And “C” Details	03/15/04
	DB 3A	Standard Diversion Box With Manhole Cover Situation And Layout	03/15/04
	DB 3B	Standard Diversion Box With Manhole Cover Up To 42” RCP And Up To 54” CMP	03/15/04
	DB 3C	Standard Diversion Box With Manhole Cover 48” to 72” RCP And 60” to 84” CMP	03/15/04
		Design Drawings (DD)	
	DD 1	Superelevation And Widening	03/15/04
	DD 2	Surface Ditch, Benched Slope, And Cut Ditch Details	03/15/04
	DD 3	Climbing Lanes	03/15/04
	DD 4	Geometric Design for Freeways (Roadway)	03/15/04
	DD 5	Entrance And Exit Ramps At Crossroads	03/15/04
	DD 6	Entrance And Exit Ramp Geometrics	03/15/04
	DD 7	Freeway Crossover	03/15/04
	DD 8	Structural Geometric Design Standards For Clearances	03/15/04
	DD 9	Structural Geometric Design Standards	03/15/04

	NUMBER	TITLE	CURRENT DATE
	DD 10	Railroad Clearances At Highway Overpass Structures	03/15/04
	DD 11	Rural Multi Lane Highways Other Than Freeways	**04/29/04**
	DD 12	Rural Two Lane Highways	**04/29/04**
	DD 13	Frontage And Access Roads (Under 50 ADT)	**04/29/04**
	DD 14	Typical Rural 2 Lane Road With Median Lane And Deceleration Lane For Intersecting Crossroads	03/15/04
		Drainage (DG)	
	DG 1	Fill Height for Metal Pipe (Steel)	03/15/04
	DG 2	Fill Height for Metal Pipe (Aluminum)	03/15/04
	DG 3	Maximum Fill Height And End Sections For HDPE And PVC Pipes	03/15/04
	DG 4	Pipe Culverts Minimum Cover	03/15/04
	DG 5	Plastic Pipe, Metal Pipe Or Pipe Arch Culvert Bedding	03/15/04
	DG 6	Precast Concrete Pipe Culvert	03/15/04
	DG 7	Gasketted Joints Or Coupling Bands For CMP	03/15/04
	DG 8	Metal Culvert End Sections	03/15/04
	DG 9	Miscellaneous Pipe Details	03/15/04
		Environmental Controls (EN)	
	EN 1	Temporary Erosion Control (Check Dams)	03/15/04
	EN 2	Temporary Erosion Control (Silt Fence)	03/15/04
	EN 3	Temporary Erosion Control (Slope Drain And Temporary Berm)	03/15/04
	EN 4	Temporary Erosion Control (Drop Inlet Barriers)	03/15/04
	EN 5	Temporary Erosion Control (Sediment Trap And Curb Inlet Barrier)	03/15/04
		Fence And Gates (FG)	
	FG 1A	Right Of Way Fence And Gates (Wood Posts)	03/15/04
	FG 1B	Right Of Way Fence And Gates (Wood Posts)	03/15/04
	FG 2A	Right Of Way Fence And Gates (Metal Posts)	**04/29/04**
	FG 2B	Right Of Way Fence And Gates (Metal Posts)	03/15/04
	FG 3	Swing Gates Type I for Gates Less Than 17’	03/15/04
	FG 4	Deer Gates	03/15/04

	NUMBER	TITLE	CURRENT DATE
	FG 5	Swing Gates Type II For Gates Wider Than 17’	03/15/04
	FG 6	Chain Link Fence	03/15/04
		Grates, Frames, And Trash Racks (GF)	
	GF 1	Manhole Frame And Grated Cover	03/15/04
	GF 2	Manhole Frame And Solid Cover	03/15/04
	GF 3	Rectangle Grate And Frame	03/15/04
	GF 4	Directional Flow Grate And Frame	03/15/04
	GF 5	Solid Cover And Frame	**04/29/04**
	GF 6	Manhole Steps	03/15/04
	GF 7	Standard Screw Grate And Frame	03/15/04
	GF 8	2’ x 2’ Grate And Frame	03/15/04
	GF 9	28” x 24” Directional Flow Grate And Frame	03/15/04
	GF 10	Standard Trash Racks 90 ° X-ing Angle	03/15/04
	GF 11	Standard Trash Racks	03/15/04
	GF 12	Standard Trash Racks	03/15/04
		General Road Work (GW)	
	GW 1	Raised Median And Plowable End Section	03/15/04
	GW 2	Concrete Curb And Gutter	03/15/04
	GW 3	Concrete Curb And Gutter Details	03/15/04
	GW 4	Concrete Driveways And Sidewalks	03/15/04
	GW 5	Pedestrian Access	03/15/04
	GW 6	Right Of Way Marker	**04/29/04**
	GW 7	Newspaper And Mailbox Stop Layout	03/15/04
	GW 8	Newspaper And Mailbox Support Hardware	03/15/04
	GW 9	Delineation Hardware	03/15/04
	GW 10	Delineation Application	03/15/04
	GW 11	Sidewalks And Shoulders On Urban Roadways	03/15/04
		Paving (PV)	
	PV 1	Joints For Highways With Concrete Traffic Lanes And Shoulders	03/15/04

	NUMBER	TITLE	CURRENT DATE
	PV 2	Pavement/Approach Slab Details	03/15/04
	PV 3	Concrete Pavement Details For Urban And Interstate	03/15/04
	PV 4	Concrete Pavement Details For Urban And Interstate	03/15/04
	PV 5	Urban Concrete Pavement Details	03/15/04
	PV 6	Rumble Strips	03/15/04
	PV 7	Rumble Strips - Typical Application	03/15/04
		Signals (SL)	
	SL 1A	Traffic Signal Mast Arm Pole And Luminaire Extension	03/15/04
	SL 1B	Traffic Signal Mast Arm Pole And Luminaire Extension	03/15/04
	SL 2	Traffic Signal Mast Arm Details 30'Thru 75'	03/15/04
	SL 3	Underground Service Pedestal Details	03/15/04
	SL 4	Traffic Signal Mast Arm Pole Foundation	03/15/04
	SL 5	Traffic Signal Pole	03/15/04
	SL 6	Pole Mounted Power Source Details	03/15/04
	SL 7	Span Wire Signal Pole Details	03/15/04
	SL 8	Signal Head Details	03/15/04
	SL 9	Pedestrian Signal Assembly	03/15/04
	SL 10	Traffic Signal Controller Base Details	03/15/04
	SL 11	Traffic Signal Loop Detector Details	03/15/04
	SL 12	Traffic Counting Loop Detector Details	03/15/04
	SL 13	Not Used	
	SL 14	Highway Luminaire Pole Ground Mount	03/15/04
	SL 15	Luminaire Slip Base Details	03/15/04
	SL 16	Highway Luminaire Pole Barrier Mount	03/15/04
	SL 17	Highway Luminaire Pole Foundation Extension	03/15/04
	SL 18	Single Transformer Substation Details	03/15/04
		Signs (SN)	
	SN 1	Bridge Load Limit Signs	03/15/04
	SN 2	School Speed Limit Assembly	03/15/04

	NUMBER	TITLE	CURRENT DATE
	SN 3	Overhead School Speed Limit Assembly	03/15/04
	SN 4	Flashing Stop Sign	03/15/04
	SN 5	Typical Installation For Milepost Signs	03/15/04
	SN 6	Speed Reduction Sign Sequence	03/15/04
	SN 7	Placement of Ground Mounted Signs	03/15/04
	SN 8	Ground Mounted Timber Sign Post (P1)	03/15/04
	SN 9	Ground Mounted Tubular Steel Sign Post (P2)	03/15/04
	SN 10	Ground Mounted Square Steel Sign Post (P3)	03/15/04
	SN 11	Slipbase Ground Mounted Tubular Steel Sign Post (P4)	03/15/04
	SN 12A	Ground Mounted Sign Installation Details	03/15/04
	SN 12B	Ground Mounted Sign Installation Details	03/15/04
	SN 12C	Ground Mounted Sign Installation Details	03/15/04
		Striping (ST)	
	ST 1	Object Markers "T" Intersection And Pavement Transition Guidance	03/15/04
	ST 2	Freeway Crossover Markings	03/15/04
	ST 3	Typical Pavement Markings	**04/29/04**
	ST 4	Crosswalks, Parking And Intersection Approaches	**04/29/04**
	ST 5	Painted Median And Auxiliary Lane Details	03/15/04
	ST 6	Passing/Climbing Lanes Traffic Control	**04/29/04**
	ST 7	Pavement Markings And Signs At Railroad Crossing	**04/29/04**
	ST 8	Plowable Pavement Markers	**04/29/04**
	ST 9	School Crossing And School Message	03/15/04
		Structures And Walls (SW)	
	SW 1A	Welded End Guard Unit	03/15/04
	SW 1B	Precast Concrete Cattle Guard	03/15/04
	SW 2	Noise Wall Placement Area	03/15/04
	SW 3A	Precast Concrete Noise Wall 1 Of 2	03/15/04
	SW 3B	Precast Concrete Noise Wall 2 Of 2	03/15/04
	SW 4A	Precast Concrete Retaining/Noise Wall 1 Of 2	03/15/04

	NUMBER	TITLE	CURRENT DATE
	SW 4B	Precast Concrete Retaining/Noise Wall 2 Of 2	03/15/04
		Traffic Control (TC)	
	TC 1A	Construction Zone Channelization Devices	03/15/04
	TC 1B	Construction Zone Signing	03/15/04
	TC 2A	Traffic Control General	03/15/04
	TC 2B	Traffic Control General	03/15/04
	TC 3	Traffic Control Project Limit Signing	03/15/04
	TC 4	Traffic Control Urban Intersections With Roadways Under 50 MPH	03/15/04
	TC 5	Traffic Control Urban Intersections With Roadways Under 50 MPH	03/15/04
	TC 6	Traffic Control Pedestrian Routing	03/15/04
	TC 7	Traffic Control Road Closed, Detour	03/15/04
	TC 8	Traffic Control Lane Closure	03/15/04
	TC 9	Traffic Control Multilane Closure	03/15/04
	TC 10	Traffic Control Expressway And Freeway Crossover/Turn-Around	03/15/04
	TC 11	Traffic Control Exit Ramp Gore	03/15/04
	TC 12	Traffic Control Entrance Ramp Gore	03/15/04
	TC 13	Traffic Control Shoulder-Haul Road	03/15/04
	TC 14	Traffic Control Flagging Operation	03/15/04
	TC 15	Traffic Control 2 Lane/2 Way Seal Coat With Cover Material	03/15/04
	TC 16	Traffic Control Pavement Marking	03/15/04

Listing of Revised Standard Drawings

Change One

Revised April 29, 2004

AT 2	Ramp Meter Details	04/29/2004
AT 3	Ramp Meter Sign Panel	04/29/2004
AT 8	ATMS Cabinet W/120V Disconnect	04/29/2004
AT 9	ATMS Cab With Stepdown Transformer	04/29/2004
AT 10	Domed CCTV Details	04/29/2004
AT 13	120V VMS Cab Foundation Details	04/29/2004
AT 14	Weigh In Motion Piezo Details	04/29/2004
BA 4E	W-Beam Guardrail Installations	04/29/2004
CB 1	Standard Catch Basin	04/29/2004
DD 11	Rural Multi Lane Highways Other Than Freeways	04/29/2004
DD 12	Rural Two Lane Highways	04/29/2004
DD 13	Frontage and Access Roads (Under 50 ADT)	04/29/2004
FG 2A	Right of Way Fence and Gates (Metal Post)	04/29/2004
GF 5	Solid Cover and Frame	04/29/2004
GW 6	Right of Way Marker	04/29/2004
ST 3	Typical Pavement Markings	04/29/2004
ST 4	Crosswalks, Parking and Intersection Approaches	04/29/2004
ST 6	Passing/Climbing Lanes Traffic Control	04/29/2004
ST 7	Pavement Markings and Signs at Railroad Crossings	04/29/2004
ST 8	Plowable Pavement Markers	04/29/2004

UTAH DEPARTMENT OF TRANSPORTATION

STANDARD DRAWINGS FOR ROAD AND BRIDGE CONSTRUCTION

DWG. NO.	DESCRIPTION	DATE
	Advanced Traffic Management System (AT)	
AT 1	LEGEND SHEET	03-15-04
AT 2	RAMP METER DETAILS	04-29-04
AT 3	RAMP METER SIGN PANEL	04-29-04
AT 4	TYPICAL RAMP METER SIGNAL HEAD MOUNTING	03-15-04
AT 5	LOOP INSTALLATION	03-15-04
AT 6	CONDUIT DETAILS	03-15-04
AT 7	POLYMER-CONCRETE JUNCTION BOX DETAILS	03-15-04
AT 8	ATMS CABINET W/120V DISCONNECT	04-29-04
AT 9	ATMS CAB WITH STEPDOWN TRANSFORMER	04-29-04
AT 10	DOMED CCTV DETAILS	04-29-04
AT 11	CCTV POLE DETAILS	03-15-04
AT 12	CCTV POLE FOUNDATION FOR DEDICATED CCTV POLE	03-15-04
AT 13	120V VMS CAB FOUNDATION DETAILS	04-29-04
AT 14	WEIGHT IN MOTION PIEZO DETAILS	04-29-04
AT 15	RWIS SITE AND FOUNDATION DETAILS	03-15-04
AT 16	RPU TOWER BASE AND SERVICE PAD LAYOUT	03-15-04
AT 17	GROUND ROD INSTALLATION AND TOWER GROUNDING	03-15-04
	Barriers (BA)	
BA 1A	PRECAST CONCRETE FULL BARRIER STANDARD SECTION	03-15-04
BA 1B	PRECAST CONCRETE FULL BARRIER STANDARD SECTION	03-15-04
BA 2	PRECAST CONCRETE HALF BARRIER STANDARD SECTION	03-15-04
BA 3	CAST IN PLACE CONSTANT SLOPE BARRIER	03-15-04
BA 4A	W-BEAM GUARDRAIL HARDWARE	03-15-04
BA 4B	W-BEAM GUARDRAIL TRANSITION WITH NEW JERSEY BARRIER SHAPE	03-15-04
BA 4C	NOT USED	
BA 4D	W-BEAM GUARDRAIL ANCHOR TYPE 1	03-15-04
BA 4E	W-BEAM GUARDRAIL INSTALLATIONS	04-29-04
BA 4F	W-BEAM GUARDRAIL TYPICALS DIVIDED ROADWAYS	03-15-04
BA 4G	W-BEAM GUARDRAIL TYPICAL MULTILANE ARTERIAL	03-15-04
BA 4H	W-BEAM GUARDRAIL TYPICAL 2 LANE 2 WAY	03-15-04
BA 4I	W-BEAM GUARDRAIL BURIED IN BACKSLOPE TERMINAL	03-15-04
BA 4J	W-BEAM GUARDRAIL BURIED IN BACKSLOPE TERMINAL WITH RUB RAIL	03-15-04
BA 4K	W-BEAM GUARDRAIL BURIED IN BACKSLOPE TERMINAL ANCHOR	03-15-04
BA 4L	W-BEAM GUARDRAIL CURVE DETAILS	03-15-04
BA 4M	W-BEAM GUARDRAIL NESTED GUARDRAIL 12' 6" SPAN	03-15-04
BA 4N	W-BEAM GUARDRAIL NESTED GUARDRAIL 18' 9" SPAN	03-15-04
BA 4O	W-BEAM GUARDRAIL NESTED GUARDRAIL 25' SPAN	03-15-04
BA 4P	W-BEAM GUARDRAIL WITH PRECAST BARRIER FOR SPAN > 25'	03-15-04
	Catch Basins and Cleanouts (CB)	
CB 1	STANDARD CATCH BASIN	04-29-04
CB 2	CURB INLET CATCH BASIN	03-15-04
CB 3	STANDARD TRANSITION CONCRETE LINED DITCH TO PIPE OR DIVERSION BOX	03-15-04
CB 4	SOLID COVER FOR STD DWG DB 1 MS-18 LOADING	03-15-04
CB 5	STANDARD SCREW GATE AND FRAME	03-15-04
CB 6A	STANDARD DROP INLET DETAILS GENERAL NOTES AND INSTALLATION DETAILS	03-15-04
CB 6B	STANDARD CATCH BASIN AND CLEANOUT BOX DROP INLET TYPE "A" DETAILS	03-15-04
CB 6C	STANDARD CATCH BASIN AND CLEANOUT BOX DROP INLET TYPE "B" DETAILS	03-15-04
CB 6D	STANDARD CATCH BASIN AND CLEANOUT BOX DROP INLET TYPE "C" DETAILS	03-15-04
CB 6E	STANDARD CATCH BASIN AND CLEANOUT BOX DROP INLET WITH ATTACHED APRON DETAILS	03-15-04
CB 6F	STANDARD CATCH BASIN AND CLEANOUT BOX DROP INLET WITH ATTACHED APRON DETAILS	03-15-04
CB 6G	STANDARD CATCH BASIN AND CLEANOUT BOX DROP INLET TYPE "D" DETAILS	03-15-04
CB 6H	STANDARD CATCH BASIN AND CLEANOUT BOX DROP INLET TYPE "D" TABLES	03-15-04
CB 7	STANDARD CURB AND GUTTER DROP INLET	03-15-04
CB 8A	DOUBLE CATCH BASIN	03-15-04
CB 8B	DOUBLE CATCH BASIN	03-15-04
CB 9A	STANDARD CATCH BASIN AND CLEANOUT BOX SITUATION AND LAYOUT	03-15-04
CB 9B	STANDARD CATCH BASIN AND CLEANOUT BOX SECTION DETAILS	03-15-04
CB 9C	STANDARD CATCH BASIN AND CLEANOUT BOX SCHEDULE OF INSTALLATION 18" TO 42" RCP 12" TO 48" CMP	03-15-04
CB 9D	STANDARD CATCH BASIN AND CLEANOUT BOX SCHEDULE OF INSTALLATION 48" TO 66" RCP 60" TO 78" CMP	03-15-04
CB 10A	STANDARD CATCH BASIN AND CLEANOUT BOX SITUATION AND LAYOUT	03-15-04
CB 10B	STANDARD CATCH BASIN AND CLEANOUT BOX SECTION DETAILS	03-15-04
CB 10C	STANDARD CATCH BASIN AND CLEANOUT BOX SCHEDULE OF INSTALLATION 42" TO 60" RCP 48" TO 72" CMP	03-15-04
	Crash Cushions (CC)	
CC 1	CRASH CUSHION MARKINGS	03-15-04
CC 2	CRASH CUSHION DRAINAGE DETAILS GUIDELINE A	03-15-04
CC 3	CRASH CUSHION DRAINAGE DETAILS GUIDELINE B	03-15-04
CC 4	DETAIL FOR PLACEMENT CRASH CUSHIONS TYPE A, B AND D	03-15-04
CC 5	GRADING AND PLACEMENT DETAILS CRASH CUSHION TYPE C	03-15-04
CC 6	CRASH CUSHION TYPE E SAND BARREL DETAILS	03-15-04
CC 7	GRADING AND INSTALLATION DETAILS CRASH CUSHION TYPE F	03-15-04
CC 8	GRADING AND INSTALLATION DETAILS CRASH CUSHION TYPE G	03-15-04
CC 9A	GRADING AND INSTALLATION DETAILS CRASH CUSHION TYPE H	03-15-04
CC 9B	GRADING AND INSTALLATION DETAILS CRASH CUSHION TYPE H	03-15-04
	Diversion Boxes (DB)	
DB 1A	STANDARD DIVERSION BOX/COVER PLATE/GRATING FOR 18" DIA. OR 24" DIA. PIPE	03-15-04
DB 1B	STANDARD DIVERSION BOX HINGED LID DETAILS FOR 18" DIA. OR 24" DIA. PIPE	03-15-04
DB 1C	STANDARD DIVERSION BOX BICYCLE-SAFE GRATING DETAILS FOR 18" DIA. OR 24" DIA. PIPE	03-15-04
DB 1D	STANDARD DIVERSION BOX THREE GATE BOX SECTIONS FOR 18" DIA. OR 24" DIA. PIPE	03-15-04
DB 1E	STANDARD DIVERSION BOX THREE GATE BOX SECTIONS FOR 18" DIA. OR 24" DIA. PIPE	03-15-04
DB 1F	STANDARD DIVERSION BOX THREE GATE BOX SECTIONS FOR 18" DIA. OR 24" DIA. PIPE	03-15-04
DB 2A	STANDARD DIVERSION BOX W/INTERCHANGEABLE WALLS, BOTTOM SLAB, WALLS AND APRON DETAILS	03-15-04
DB 2B	STANDARD DIVERSION BOX W/INTERCHANGEABLE WALLS, QUANTITIES SCHEDULE	03-15-04
DB 2C	STANDARD DIVERSION BOX W/INTERCHANGEABLE WALLS, HAND SLIDE GATE DETAILS	03-15-04
DB 2D	STANDARD DIVERSION BOX TYPE "G" HAND SLIDE GATE DETAILS	03-15-04
DB 2E	STANDARD DIVERSION BOX HINGED LID (SOLID COVER PLATE) TYPE "A" DETAILS TYPE I PLAN	03-15-04
DB 2F	STANDARD DIVERSION BOX HINGED LID (SOLID COVER PLATE) TYPE "A" DETAILS TYPE II PLAN	03-15-04
DB 2G	STANDARD DIVERSION BOX HINGED LID SOLID COVER TYPE "B" DETAILS	03-15-04
DB 2H	STANDARD DIVERSION BOX HINGED LID SOLID COVER TYPE "B" AND "C" DETAILS	03-15-04
DB 3A	STANDARD DIVERSION BOX WITH MANHOLE COVER SITUATION AND LAYOUT	03-15-04
DB 3B	STANDARD DIVERSION BOX WITH MANHOLE COVER UP TO 42" RCP AND UP TO 54" CMP	03-15-04
DB 3C	STANDARD DIVERSION BOX WITH MANHOLE COVER 48" TO 72" RCP AND 60" TO 84" CMP	03-15-04
	Design (DD)	
DD 1	SUPERELEVATION AND WIDENING	03-15-04
DD 2	SURFACE DITCH, BENCHED SLOPE, AND CUT DITCH DETAILS	03-15-04
DD 3	CLIMBING LANES	03-15-04
DD 4	GEOMETRIC DESIGN FOR FREEWAYS (ROADWAY)	03-15-04
DD 5	ENTRANCE AND EXIT RAMPS AT CROSSROADS	03-15-04
DD 6	ENTRANCE AND EXIT RAMP GEOMETRICS	03-15-04
DD 7	FREEWAY CROSSOVER	03-15-04
DD 8	STRUCTURAL GEOMETRIC DESIGN STANDARDS FOR CLEARANCES	03-15-04
DD 9	STRUCTURAL GEOMETRIC DESIGN STANDARDS	03-15-04
DD 10	RAILROAD CLEARANCES AT HIGHWAY OVERPASS STRUCTURES	03-15-04
DD 11	RURAL MULTI LANE HIGHWAYS OTHER THAN FREEWAYS	04-29-04
DD 12	RURAL TWO LANE HIGHWAYS	04-29-04
DD 13	FRONTAGE AND ACCESS ROADS (UNDER 50 ADT)	04-29-04
DD 14	TYPICAL RURAL 2 LANE ROAD WITH MEDIAN LANE AND DECELERATION LANE FOR INTERSECTING CROSSROADS	03-15-04
	Drainage (DG)	
DG 1	FILL HEIGHT FOR METAL PIPE (STEEL)	03-15-04
DG 2	FILL HEIGHT FOR METAL PIPE (ALUMINUM)	03-15-04
DG 3	MAXIMUM FILL HEIGHT AND END SECTIONS FOR HDPE AND PVC PIPES	03-15-04
DG 4	PIPE CULVERTS MINIMUM COVER	03-15-04
DG 5	PLASTIC PIPE, METAL PIPE OR PIPE ARCH CULVERT BEDDING	03-15-04
DG 6	PRECAST CONCRETE PIPE CULVERT	03-15-04
DG 7	GASKETTED JOINTS OR COUPLING BANDS FOR CMP	03-15-04
DG 8	METAL CULVERT END SECTION	03-15-04
DG 9	MISCELLANEOUS PIPE DETAILS	03-15-04
	Environmental Controls (EN)	
EN 1	TEMPORARY EROSION CONTROL (CHECK DAMS)	03-15-04
EN 2	TEMPORARY EROSION CONTROL (SILT FENCE)	03-15-04
EN 3	TEMPORARY EROSION CONTROL (SLOPE DRAIN AND TEMPORARY BERM)	03-15-04
EN 4	TEMPORARY EROSION CONTROL (DROP INLET BARRIERS)	03-15-04
EN 5	TEMPORARY EROSION CONTROL (SEDIMENT TRAP AND CURB INLET BARRIER)	03-15-04

☒ MARKED BOXES INDICATE DRAWINGS APPLICABLE TO THIS PROJECT

REVISIONS

NO.	DATE	APPR.	REMARKS
1	04/29/04	BA	CHANGE 1

UTAH DEPARTMENT OF TRANSPORTATION
STANDARD DRAWINGS FOR ROAD AND BRIDGE CONSTRUCTION
SALT LAKE CITY, UTAH

REVIEWED AND CHECKED — APR.29,2004 DATE

CHECKED AND APPROVAL — APR.29,2004 DATE

STANDARD ENGINEER

STANDARD DRAWING INDEX SHEET

STANDARD DRAWING TITLE

STD DWG
1-B

DGN File:N:\Esd\Standard_Drawings\Imperial\2004\Approved\Change1Approved\sheetlb.dgn

27-MAY-2004

UTAH DEPARTMENT OF TRANSPORTATION

STANDARD DRAWINGS FOR ROAD AND BRIDGE CONSTRUCTION

DWG. NO.	DESCRIPTION	DATE
	Fence and Gates (FG)	
FG 1A	RIGHT OF WAY FENCE AND GATES (WOOD POST)	03-15-04
FG 1B	RIGHT OF WAY FENCE AND GATES (WOOD POST)	03-15-04
FG 2A	RIGHT OF WAY FENCE AND GATES (METAL POST)	04-29-04
FG 2B	RIGHT OF WAY FENCE AND GATES (METAL POST)	03-15-04
FG 3	SWING GATES TYPE 1 FOR GATES LESS THAN 17'	03-15-04
FG 4	DEER GATES	03-15-04
FG 5	SWING GATES TYPE II FOR GATES WIDER THAN 17'	03-15-04
FG 6	CHAIN LINK FENCE	03-15-04
	Grates, Frames and Trash Racks (GF)	
GF 1	MANHOLE FRAME AND GRATED COVER	03-15-04
GF 2	MANHOLE FRAME AND SOLID COVER	03-15-04
GF 3	RECTANGULAR GRATE AND FRAME	03-15-04
GF 4	DIRECTIONAL FLOW GRATE AND FRAME	03-15-04
GF 5	SOLID COVER AND FRAME	04-29-04
GF 6	MANHOLE STEPS	03-15-04
GF 7	STANDARD SCREW GATE AND FRAME	03-15-04
GF 8	2' x 2' GRATE AND FRAME	03-15-04
GF 9	28" x 24" DIRECTIONAL FLOW GRATE AND FRAME	03-15-04
GF 10	STANDARD TRASH RACKS 90° X-ING ANGLE	03-15-04
GF 11	STANDARD TRASH RACKS	03-15-04
GF 12	STANDARD TRASH RACKS	03-15-04
	General Road Work (GW)	
GW 1	RAISED MEDIAN AND PLOWABLE END SECTION	03-15-04
GW 2	CONCRETE CURB AND GUTTER	03-15-04
GW 3	CONCRETE CURB AND GUTTER DETAILS	03-15-04
GW 4	CONCRETE DRIVEWAYS AND SIDEWALKS	03-15-04
GW 5	PEDESTRIAN ACCESS	03-15-04
GW 6	RIGHT OF WAY MARKER	04-29-04
GW 7	NEWSPAPER AND MAILBOX STOP LAYOUT	03-15-04
GW 8	NEWSPAPER AND MAILBOX SUPPORT HARDWARE	03-15-04
GW 9	DELINEATION HARDWARE	03-15-04
GW 10	DELINEATION APPLICATION	03-15-04
GW 11	SIDEWALKS AND SHOULDERS ON URBAN ROADWAYS	03-15-04

DWG. NO.	DESCRIPTION	DATE
	Paving (PV)	
PV 1	JOINTS FOR HIGHWAYS WITH CONCRETE TRAFFIC LANES AND SHOULDERS	03-15-04
PV 2	PAVEMENT/APPROACH SLAB DETAILS	03-15-04
PV 3	CONCRETE PAVEMENT DETAILS FOR URBAN AND INTERSTATE	03-15-04
PV 4	CONCRETE PAVEMENT DETAILS FOR URBAN AND INTERSTATE	03-15-04
PV 5	URBAN CONCRETE PAVEMENT DETAILS	03-15-04
PV 6	RUMBLE STRIPS	03-15-04
PV 7	RUMBLE STRIPS-TYPICAL APPLICATION	03-15-04
	Signals (SL)	
SL 1A	TRAFFIC SIGNAL MAST ARM POLE AND LUMINAIRE EXTENSION	03-15-04
SL 1B	TRAFFIC SIGNAL MAST ARM POLE AND LUMINAIRE EXTENSION	03-15-04
SL 2	TRAFFIC SIGNAL MAST ARM DETAILS 30' THRU 75'	03-15-04
SL 3	UNDERGROUND SERVICE PEDESTAL DETAILS	03-15-04
SL 4	TRAFFIC SIGNAL MAST ARM POLE FOUNDATION	03-15-04
SL 5	TRAFFIC SIGNAL POLE	03-15-04
SL 6	POLE MOUNTED POWER SOURCE DETAILS	03-15-04
SL 7	SPAN WIRE SIGNAL POLE DETAILS	03-15-04
SL 8	SIGNAL HEAD DETAILS	03-15-04
SL 9	PEDESTRIAN SIGNAL ASSEMBLY	03-15-04
SL 10	TRAFFIC SIGNAL CONTROLLER BASE DETAILS	03-15-04
SL 11	TRAFFIC SIGNAL LOOP DETECTOR DETAILS	03-15-04
SL 12	TRAFFIC COUNTING LOOP DETECTOR DETAILS	03-15-04
SL 13	NOT USED	
SL 14	HIGHWAY LUMINAIRE POLE GROUND MOUNT	03-15-04
SL 15	LUMINAIRE SLIP BASE DETAILS	03-15-04
SL 16	HIGHWAY LUMINAIRE POLE BARRIER MOUNT	03-15-04
SL 17	HIGHWAY LUMINAIRE POLE FOUNDATION EXTENSION	03-15-04
SL 18	SINGLE TRANSFORMER SUBSTATION DETAILS	03-15-04
	Signs (SN)	
SN 1	BRIDGE LOAD LIMITS SIGNS	03-15-04
SN 2	SCHOOL SPEED LIMIT ASSEMBLY	03-15-04
SN 3	OVERHEAD SCHOOL SPEED LIMIT ASSEMBLY	03-15-04
SN 4	FLASHING STOP SIGN	03-15-04
SN 5	TYPICAL INSTALLATION FOR MILEPOST SIGNS	03-15-04
SN 6	SPEED REDUCTION SIGN SEQUENCE	03-15-04
SN 7	PLACEMENT OF GROUND MOUNTED SIGNS	03-15-04
SN 8	GROUND MOUNTED TIMBER SIGN POST (P1)	03-15-04
SN 9	GROUND MOUNTED TUBULAR STEEL SIGN POST (P2)	03-15-04
SN 10	GROUND MOUNTED SQUARE STEEL SIGN POST (P3)	03-15-04
SN 11	SLIPBASE GROUND MOUNTED TUBULAR STEEL SIGN POST (P4)	03-15-04
SN 12A	GROUND MOUNTED SIGN INSTALLATION DETAILS	03-15-04
SN 12B	GROUND MOUNTED SIGN INSTALLATION DETAILS	03-15-04
SN 12C	GROUND MOUNTED SIGN INSTALLATION DETAILS	03-15-04

DWG. NO.	DESCRIPTION	DATE
	Striping (ST)	
ST 1	OBJECT MARKERS "T" INTERSECTION AND PAVEMENT TRANSITION GUIDANCE	03-15-04
ST 2	FREEWAY CROSSOVER MARKINGS	03-15-04
ST 3	TYPICAL PAVEMENT MARKINGS	04-29-04
ST 4	CROSSWALKS, PARKING AND INTERSECTION APPROACHES	04-29-04
ST 5	PAINTED MEDIAN AND AUXILIARY LANE DETAILS	03-15-04
ST 6	PASSING/CLIMBING LANES TRAFFIC CONTROL	04-29-04
ST 7	PAVEMENT MARKINGS AND SIGNS AT RAILROAD CROSSING	04-29-04
ST 8	PLOWABLE PAVEMENT MARKERS	04-29-04
ST 9	SCHOOL CROSSING AND SCHOOL MESSAGE	03-15-04
	Structures and Walls (SW)	
SW 1A	WELDED END GUARD UNIT	03-15-04
SW 1B	PRECAST CONCRETE CATTLE GUARD	03-15-04
SW 2	NOISE WALL PLACEMENT AREA	03-15-04
SW 3A	PRECAST CONCRETE NOISE WALL 1 OF 2	03-15-04
SW 3B	PRECAST CONCRETE NOISE WALL 2 OF 2	03-15-04
SW 4A	PRECAST CONCRETE RETAINING/NOISE WALL 1 OF 2	03-15-04
SW 4B	PRECAST CONCRETE RETAINING/NOISE WALL 2 OF 2	03-15-04
	Traffic Control (TC)	
TC 1A	CONSTRUCTION ZONE CHANNELIZATION DEVICES	03-15-04
TC 1B	CONSTRUCTION ZONE SIGNING	03-15-04
TC 2A	TRAFFIC CONTROL GENERAL	03-15-04
TC 2B	TRAFFIC CONTROL GENERAL	03-15-04
TC 3	TRAFFIC CONTROL PROJECT LIMIT SIGNING	03-15-04
TC 4	TRAFFIC CONTROL URBAN INTERSECTION WITH ROADWAYS UNDER 50 MPH	03-15-04
TC 5	TRAFFIC CONTROL URBAN INTERSECTION WITH ROADWAYS UNDER 50 MPH	03-15-04
TC 6	TRAFFIC CONTROL PEDESTRIAN ROUTING	03-15-04
TC 7	TRAFFIC CONTROL ROAD CLOSED, DETOUR	03-15-04
TC 8	TRAFFIC CONTROL LANE CLOSURE	03-15-04
TC 9	TRAFFIC CONTROL MULTILANE CLOSURE	03-15-04
TC 10	TRAFFIC CONTROL EXPRESSWAY AND FREEWAY CROSSOVER/ TURN AROUND	03-15-04
TC 11	TRAFFIC CONTROL EXIT RAMP GORE	03-15-04
TC 12	TRAFFIC CONTROL ENTRANCE RAMP GORE	03-15-04
TC 13	TRAFFIC CONTROL SHOULDER-HAUL ROAD	03-15-04
TC 14	TRAFFIC CONTROL FLAGGING OPERATION	03-15-04
TC 15	TRAFFIC CONTROL 2 LANE / 2 WAY SEAL COAT WITH COVER MATERIAL	03-15-04
TC 16	TRAFFIC CONTROL PAVEMENT MARKING	03-15-04

☒ MARKED BOXES INDICATE DRAWINGS APPLICABLE TO THIS PROJECT

REVISIONS

NO.	DATE	APPR.	REMARKS
1	04/29/04	B.A.	CHANGE 1

UTAH DEPARTMENT OF TRANSPORTATION
STANDARD DRAWINGS FOR ROAD AND BRIDGE CONSTRUCTION
SALT LAKE CITY, UTAH

REVIEWED AND CHECKED — APR.29,2004 DATE
CHECKED AND APPROVAL — APR.29,2004 DATE
STANDARD ENGINEER

STANDARD DRAWING INDEX SHEET
STANDARD DRAWING TITLE

STD DWG
1-C

DGN File:N:\Esd\Standard_Drawings\Imperial\2004\Approved\Change1Approved\sheet1c.dgn
27-MAY-2004

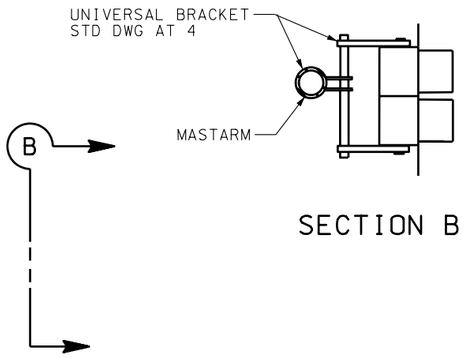

SECTION B

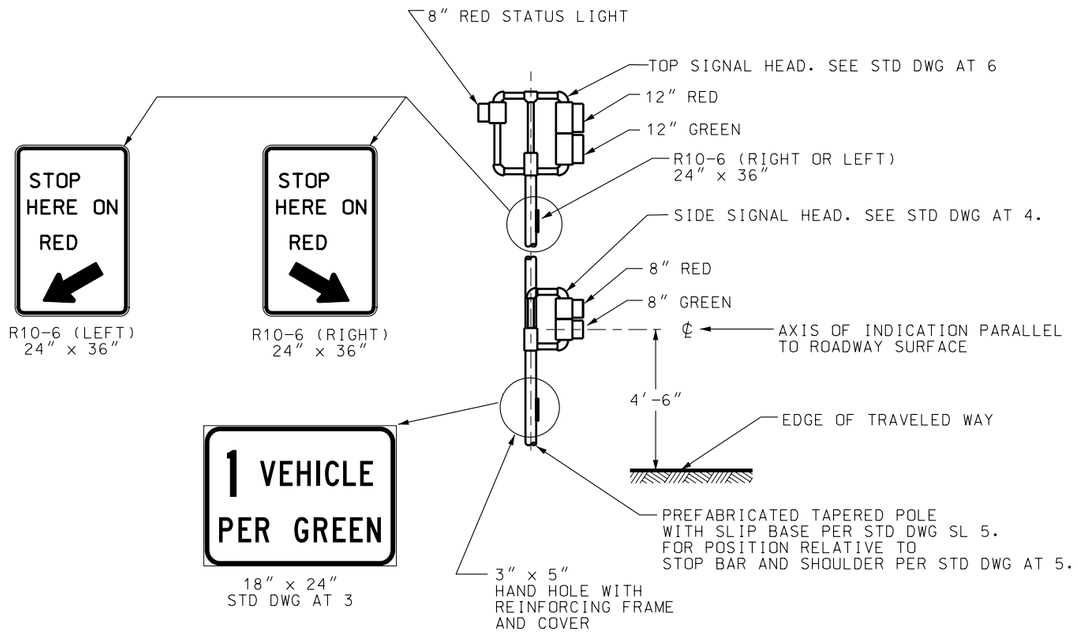

RAMP METER SIGNAL ASSEMBLY
WITH ENFORCEMENT INDICATION

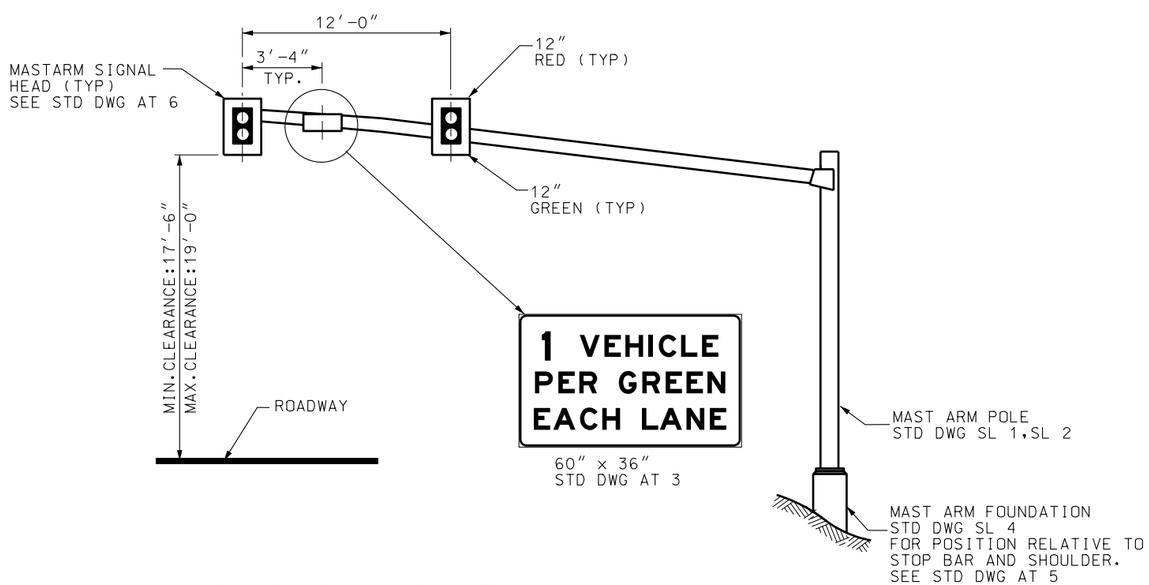

MASTARM SIGNAL ASSEMBLY

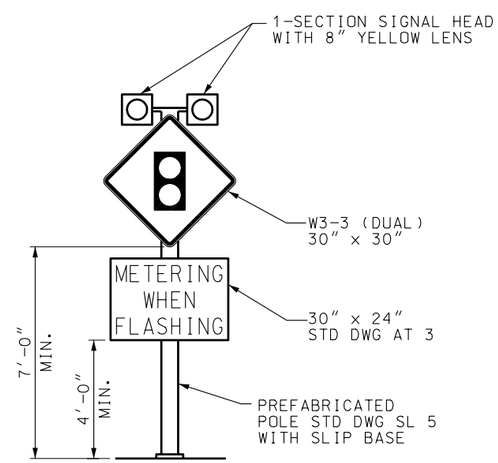

ADVANCE FLASHING BEACON ASSEMBLY

REVISIONS

NO.	DATE	APPR.	REMARKS
1	03/24/04	S.S.	REVISED "ADVANCE FLASHING BEACON ASSEMBLY" DETAIL

UTAH DEPARTMENT OF TRANSPORTATION
STANDARD DRAWINGS FOR ROAD AND BRIDGE CONSTRUCTION
SALT LAKE CITY, UTAH

RECOMMENDED FOR APPROVAL — APR.29,2004 DATE

CHAIRMAN STANDARDS COMMITTEE APPROVED — APR.29,2004 DATE

DEPUTY DIRECTOR

RAMP METER DETAILS

STANDARD DRAWING TITLE

STD DWG
AT 2

DGN File: N:\Esd\Standard Drawings\Imperial\2004\Approved\Changes\Approved\sa02.dgn

27-MAY-2004

SIGN DETAIL
NOT TO SCALE

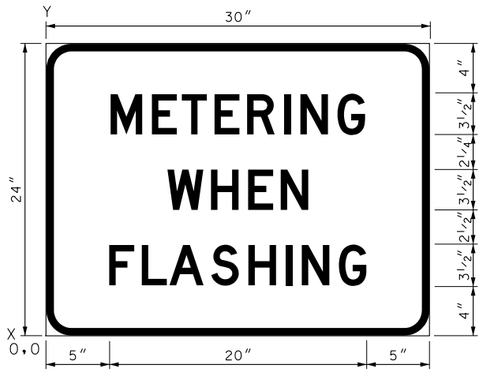

WIDTH × HEIGHT	30″ × 24″
BORDER WIDTH	⅝″
CORNER RADIUS	2″
MOUNTING	GROUND
BACKGROUND	TYPE: REFLECTIVE
	COLOR: WHITE
LEGEND/BORDER	TYPE: NON-REFLECTIVE
	COLOR: BLACK

COORDINATES ARE TO LOWER LEFT CORNERS

Y FONT	LETTER POSITIONS (X)														HT LEN
15½	M	E	T	E	R	I	N	G							3½
D	5	8¼	10⅝	13⅛	15¾	18⅝	20	23							20
9¾	W	H	E	N											3½
D	9½	13	15¾	18¼											11
4	F	L	A	S	H	I	N	G							3½
D	5	7½	9⅝	13	15¾	18¾	20	23							20¼

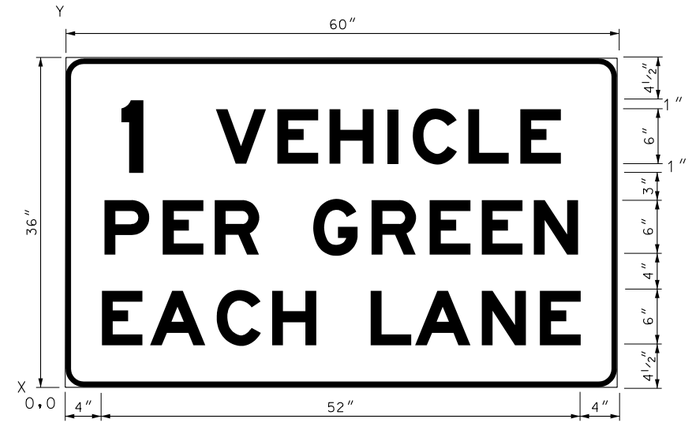

WIDTH × HEIGHT	60″ × 36″
BORDER WIDTH	⅝″
CORNER RADIUS	2″
MOUNTING	GROUND
BACKGROUND	TYPE: REFLECTIVE
	COLOR: WHITE
LEGEND/BORDER	TYPE: NON-REFLECTIVE
	COLOR: BLACK

COORDINATES ARE TO LOWER LEFT CORNERS

Y FONT	LETTER POSITIONS (X)														HT LEN
24½	V	E	H	I	C	L	E								6
EM	16¼	23	28⅝	35	37¾	43¾	49¼								37½
23½	1														6
EM	6⅛														2½
14½	P	E	R	G	R	E	E	N							6
EM	4¼	10⅝	16¼	27	33¼	39½	45¼	50¾							51¼
4½	E	A	C	H	L	A	N	E							6
EM	4	9¼	16½	22½	33⅛	38	45¼	51½							52

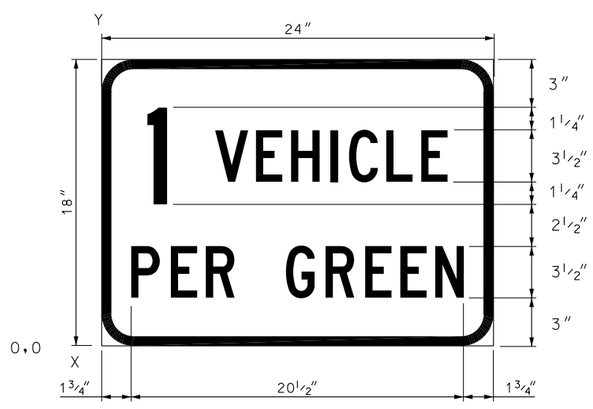

WIDTH × HEIGHT	24″ × 18″
BORDER WIDTH	⅝″
CORNER RADIUS	2″
MOUNTING	GROUND
BACKGROUND	TYPE: REFLECTIVE
	COLOR: WHITE
LEGEND/BORDER	TYPE: NON-REFLECTIVE
	COLOR: BLACK

COORDINATES ARE TO LOWER LEFT CORNERS

Y FONT	LETTER POSITIONS (X)														HT LEN
10¼	V	E	H	I	C	L	E								3½
C	7	9⅜	11⅝	14	15⅛	17⅜	19⅝								14¼
9	1														6
C	2¾														1¼
3	P	E	R	G	R	E	E	N							3½
C	1¾	4¼	6⅜	11¼	13¾	16⅛	18¼	20⅜							20½

REVISIONS

NO.	DATE	APPR.	REMARKS
1	04/28/04	FRW	CORRECTED 'VEHICLE' SPELLING IN SIGN AT LOWER LEFT

UTAH DEPARTMENT OF TRANSPORTATION
STANDARD DRAWINGS FOR ROAD AND BRIDGE CONSTRUCTION
SALT LAKE CITY, UTAH

RECOMMENDED FOR APPROVAL — APR.29,2004 DATE

CHAIRMAN STANDARDS COMMITTEE APPROVED — APR.29,2004 DATE

DEPUTY DIRECTOR

STANDARD DRAWING TITLE
RAMP METER
SIGN PANEL

STD DWG
AT 3

DGN File:N:\Esd\Standard_Drawings\Imperial\2004Approved\Changed\Approved\at03.dgn
27-MAY-2004

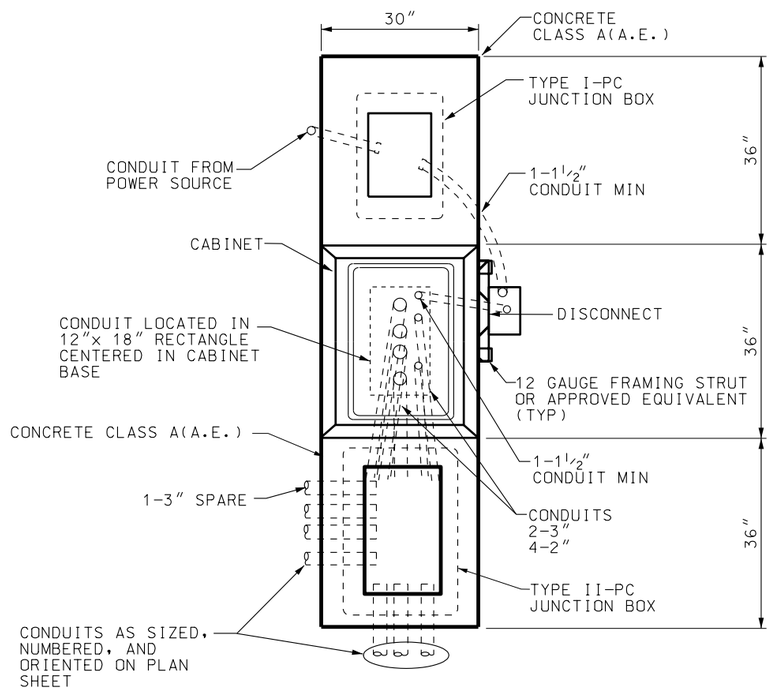

ATMS CABINET - PLAN VIEW

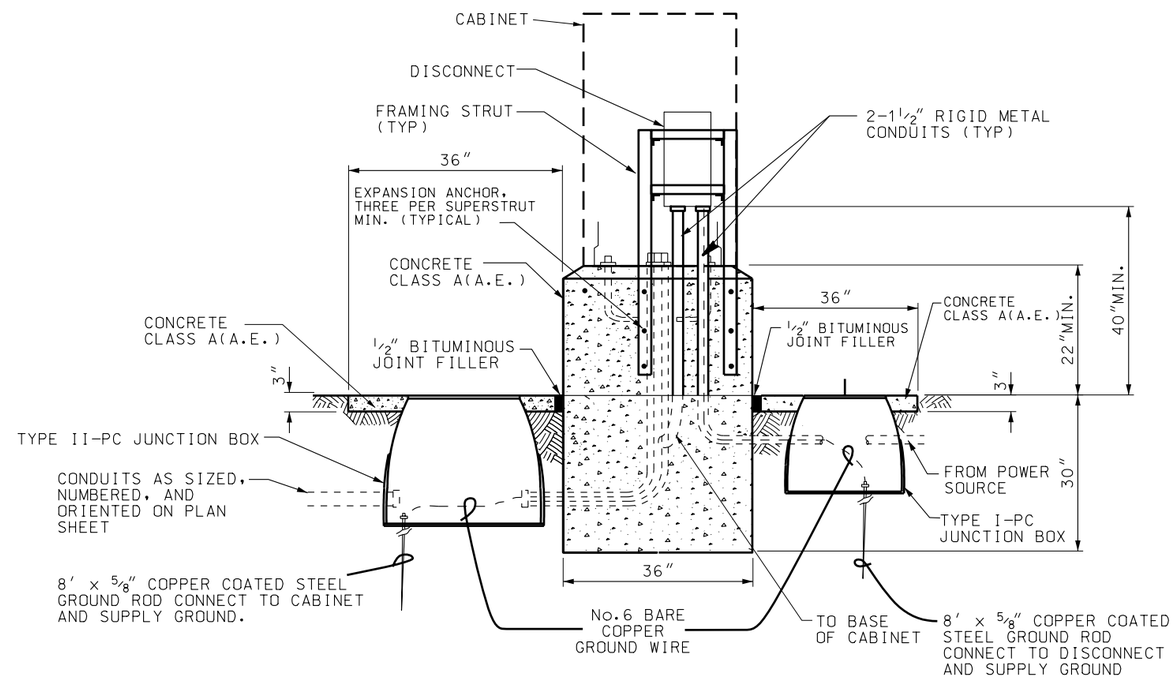

ATMS CABINET - SIDE VIEW

ATMS CABINET WITH 120V DISCONNECT

REVISIONS

NO.	DATE	APPR.	REMARKS
1	04/29/04	B.A.	SHADING FIXED IN DETAILS.

UTAH DEPARTMENT OF TRANSPORTATION
STANDARD DRAWINGS FOR ROAD AND BRIDGE CONSTRUCTION
SALT LAKE CITY, UTAH

RECOMMENDED FOR APPROVAL — APR.29.2004 DATE
CHAIRMAN STANDARDS COMMITTEE APPROVED — APR.29.2004 DATE
DEPUTY DIRECTOR

STANDARD DRAWING TITLE
ATMS CABINET W/120V DISCONNECT

STD DWG
AT 8

DGN File: N:\Esd\Standard_Drawings\Imperials\2004\Approved\Changed\Approved\sx88.dgn
27-MAY-2004

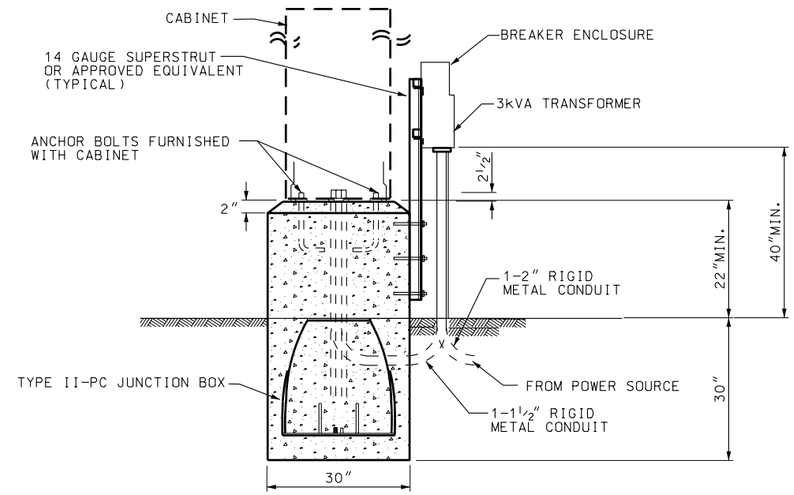

ATMS/334 CABINET - FRONT VIEW

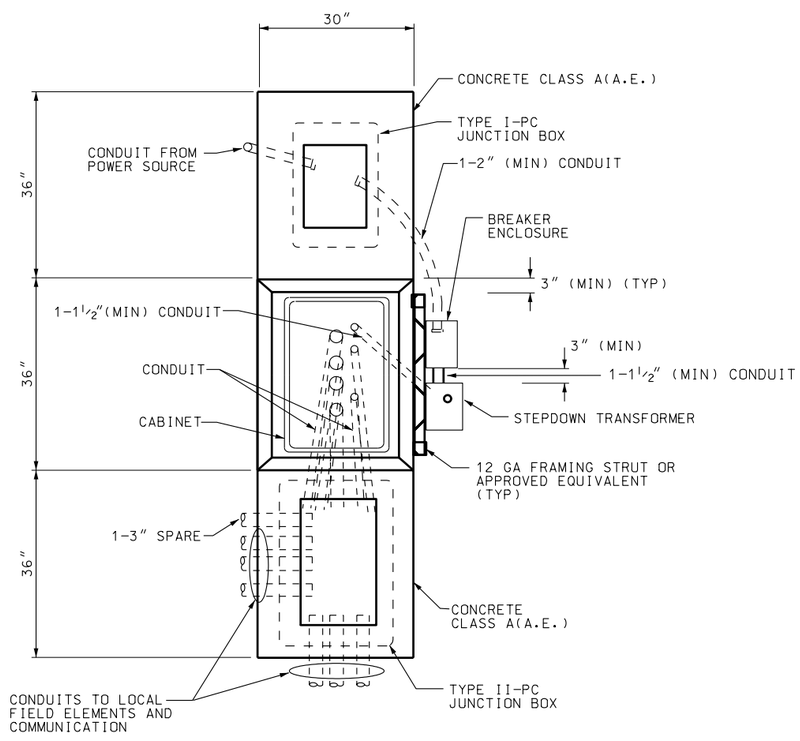

ATMS CABINET - PLAN VIEW

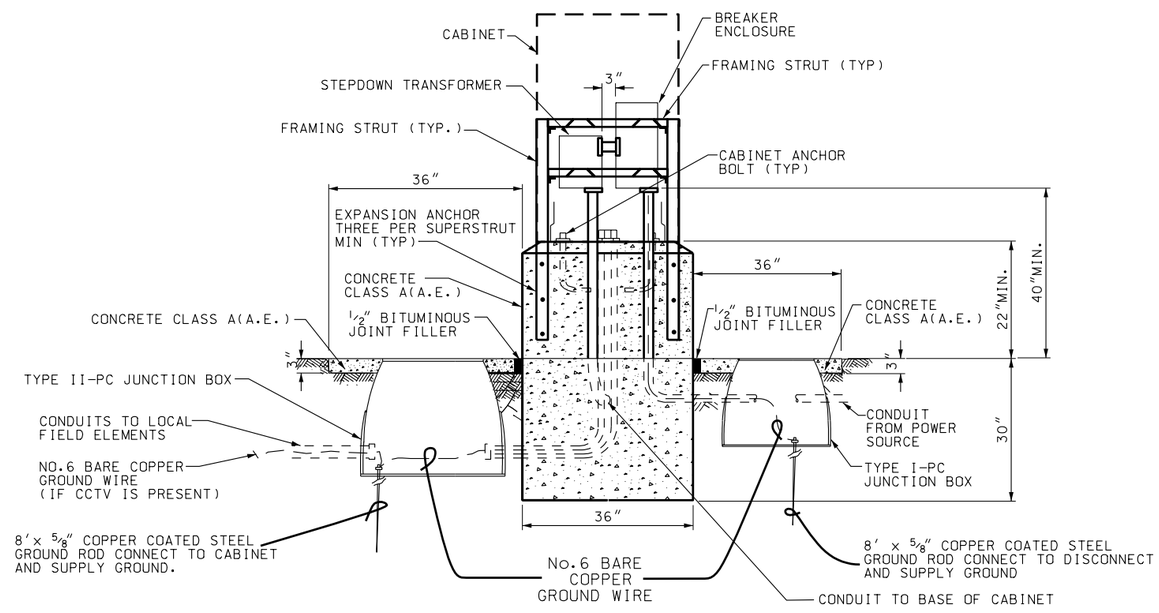

ATMS CABINET - SIDE VIEW

ATMS CABINET WITH STEPDOWN TRANSFORMER

NO.	DATE	APPR.	REMARKS
1	04/29/04	B.A.	SHADING FIXED IN DETAILS.

REVISIONS

UTAH DEPARTMENT OF TRANSPORTATION
STANDARD DRAWINGS FOR ROAD AND BRIDGE CONSTRUCTION
SALT LAKE CITY, UTAH

RECOMMENDED FOR APPROVAL — APR.29,2004 DATE

CHAIRMAN STANDARDS COMMITTEE APPROVED — APR.29,2004 DATE

DEPUTY DIRECTOR

ATMS CAB WITH STEPDOWN TRANSFORMER

STANDARD DRAWING TITLE

STD DWG
AT 9

DGN File: N:\Esd\Standard_Drawings\Imperial\2004\Approved\Changed\Approved\as09.dgn

27-MAY-2004

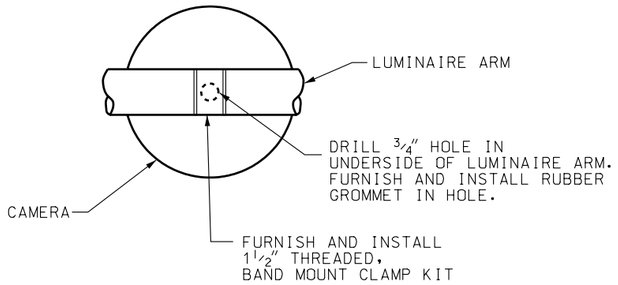

TOP VIEW

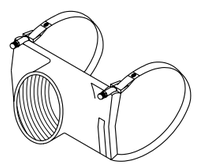

1 1/2" THREADED, BAND MOUNT CLAMP KIT

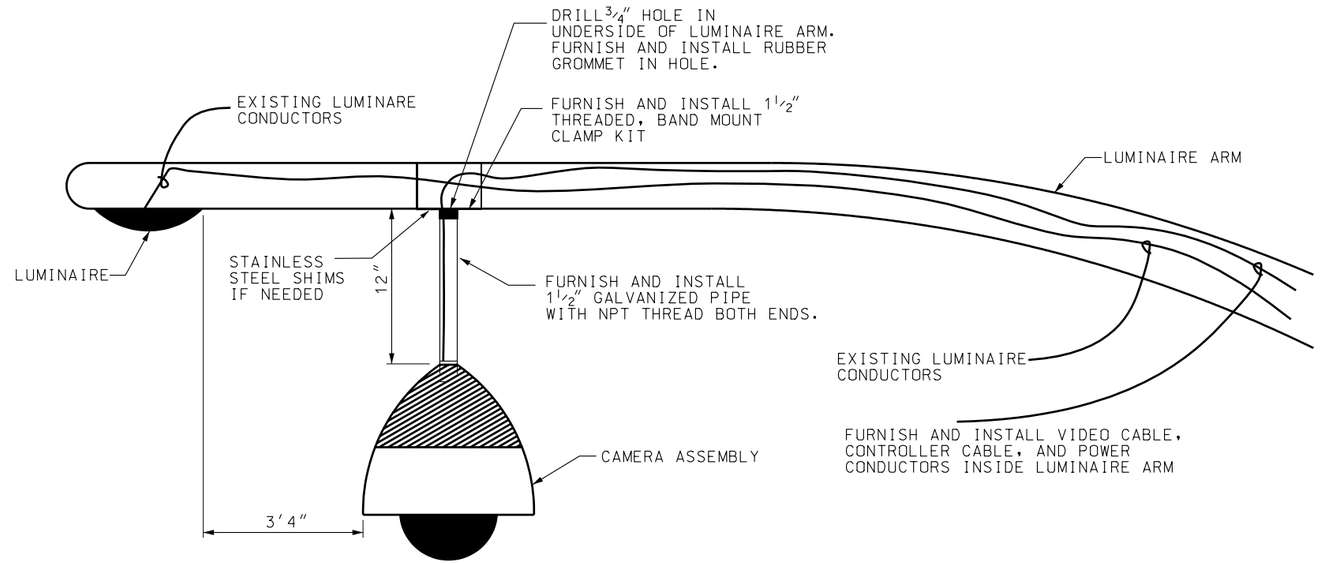

CAMERA ELEVATION W/LUMINAIRE EXTENSION

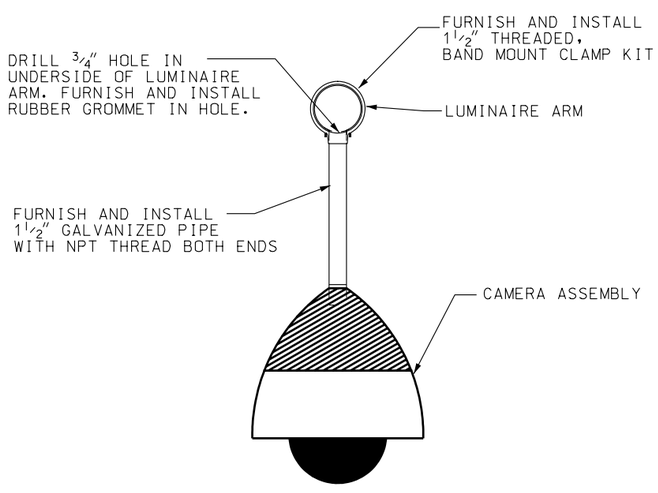

SECTION VIEW

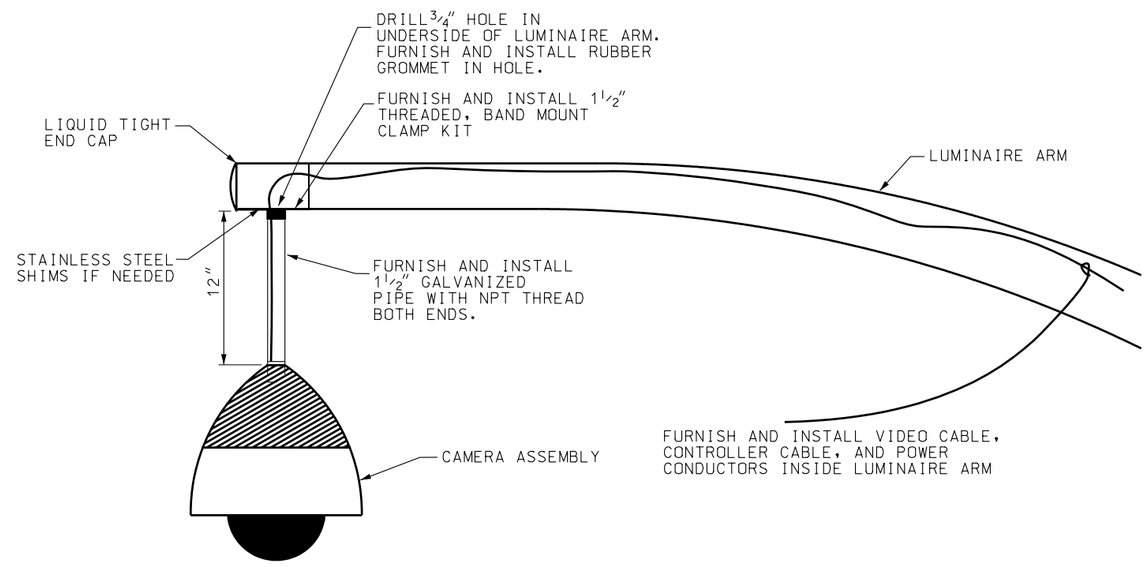

CAMERA ELEVATION W/END CAP

CAMERA ON LUMINAIRE DETAILS

REVISIONS

NO.	DATE	APPR.	REMARKS
1	04/29/04	B.A.	SHADING FIXED IN DETAILS.

UTAH DEPARTMENT OF TRANSPORTATION
STANDARD DRAWINGS FOR ROAD AND BRIDGE CONSTRUCTION
SALT LAKE CITY, UTAH

RECOMMENDED FOR APPROVAL — APR.29.2004 DATE

CHAIRMAN STANDARDS COMMITTEE APPROVED — APR.29.2004 DATE

DEPUTY DIRECTOR

STANDARD DRAWING TITLE: DOMED CCTV DETAILS

STD DWG
AT 10

DGN File: N:\Esa\Standard Drawings\Imperials\2004\Approved\Changes\Approved\at10.dgn
27-MAY-2004

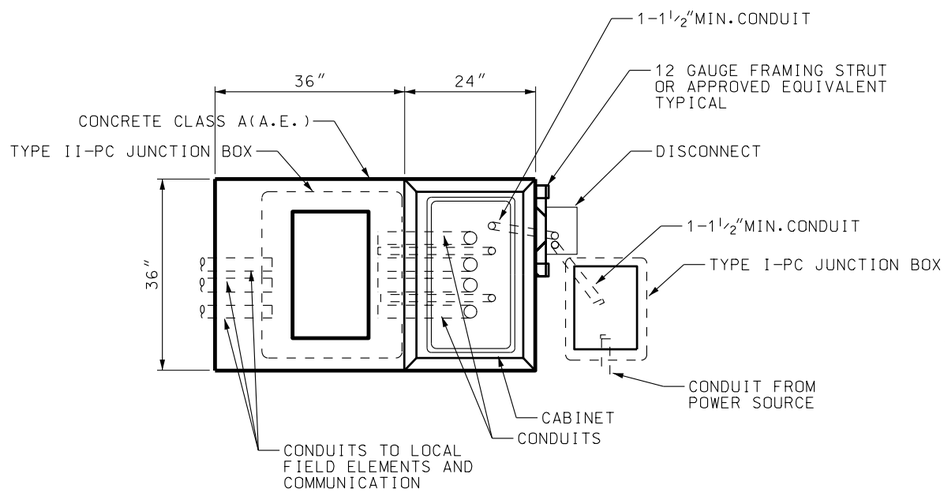

VMS CABINET - PLAN VIEW

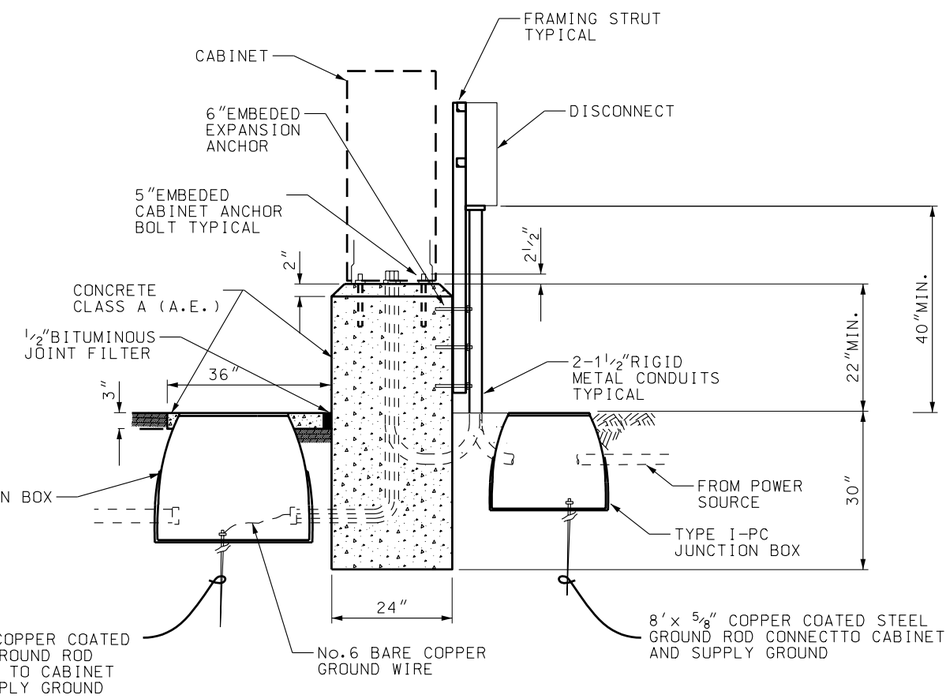

VMS CABINET - SIDE VIEW

VMS CABINET WITH 120V DISCONNECT

NO.	DATE	APPR.	REMARKS
1	04/29/04	B.A.	SHADING FIXED IN DETAILS.

REVISIONS

UTAH DEPARTMENT OF TRANSPORTATION
STANDARD DRAWINGS FOR ROAD AND BRIDGE CONSTRUCTION
SALT LAKE CITY, UTAH

RECOMMENDED FOR APPROVAL — APR.29,2004 DATE

CHAIRMAN STANDARDS COMMITTEE APPROVED — APR.29,2004 DATE

DEPUTY DIRECTOR

120V VMS CAB
FOUNDATION DETAILS

STANDARD DRAWING TITLE

STD DWG
AT 13

DGN File:N:\Esd\Standard_Drawings\Imperial\2004\Approved\Changes\Approved\at13.dgn

27-MAY-2004

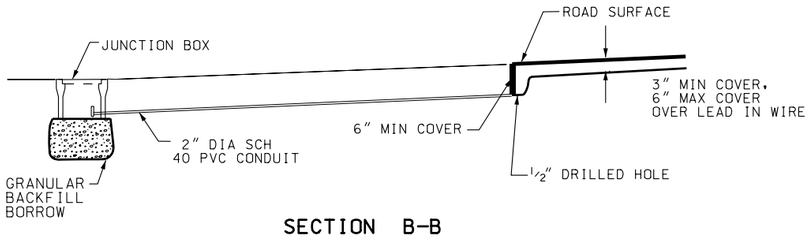

SECTION B-B

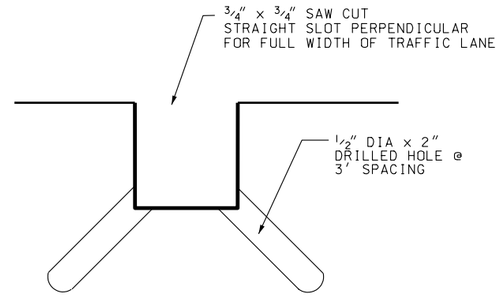

SAW CUT DETAIL

NOTES:

1. REFER TO STD DWG SL3 FOR LOOP DETECTOR DETAILS.
2. MAINTAIN 12"MIN. SPACING BETWEEN SAW CUT, AND ANY CONCRETE JOINTS.
3. USE FLEXIBLE MATERIAL CROSSING JOINTS.
4. GRIND FLUSH WITH SURFACE AFTER CURED.

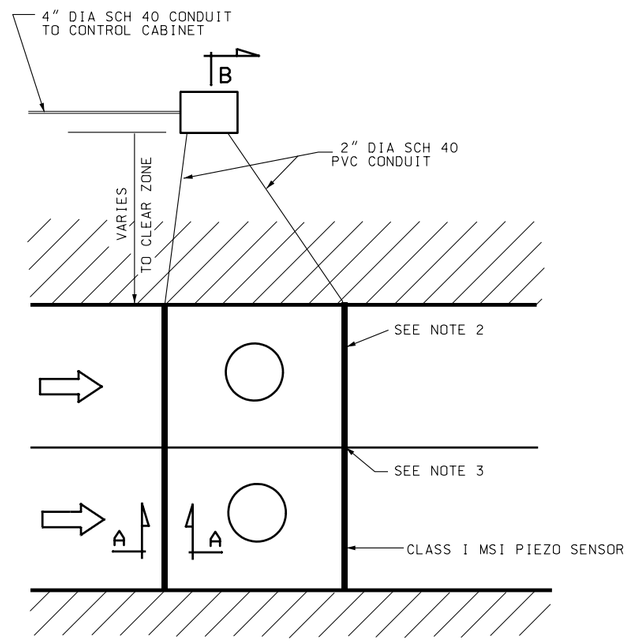

PLAN

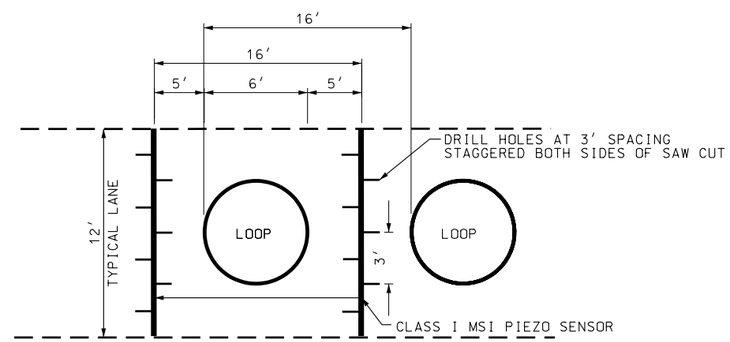

TYPICAL PIEZO DETAIL

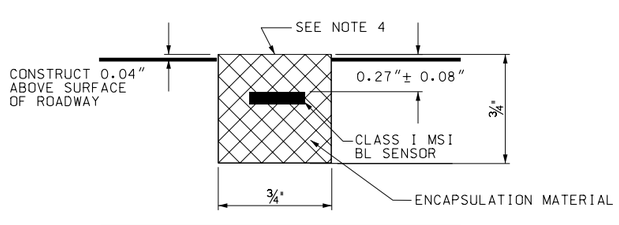

SECTION A-A

REVISIONS

NO.	DATE	APPR.	REMARKS
1	03/22/04	G.K.	PLAN DETAIL REMOVED DOUBLE CONDUITS, REVISED NOTE 4

UTAH DEPARTMENT OF TRANSPORTATION
STANDARD DRAWINGS FOR ROAD AND BRIDGE CONSTRUCTION
SALT LAKE CITY, UTAH

RECOMMENDED FOR APPROVAL — APR.29,2004 DATE

CHAIRMAN STANDARDS COMMITTEE APPROVED — APR.29,2004 DATE

DEPUTY DIRECTOR

STANDARD DRAWING TITLE

WEIGH IN MOTION PIEZO DETAILS

STD DWG
AT 14

DGN File:N:\Esd\Standard.Drawings\Imperial\2004Approved\Changes\Approved\at14.dgn
27-MAY-2004

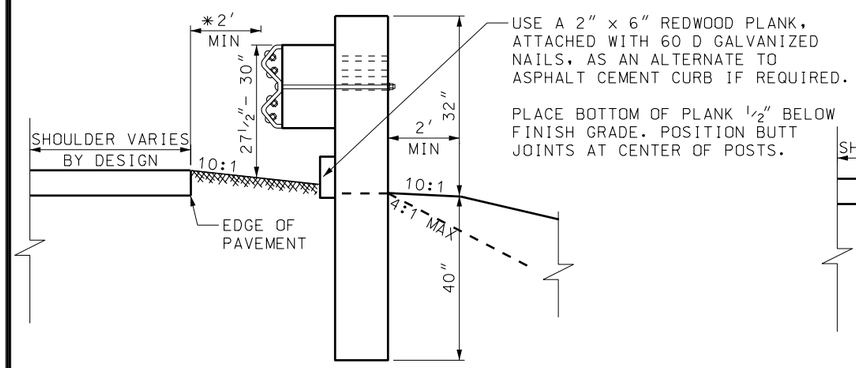

INITIAL INSTALLATION
USE 72″ LONG POSTS

* NOTE.
2′MINIMUM OR PLACE AS FAR OFF PAVEMENT EDGE AS PRACTICAL.

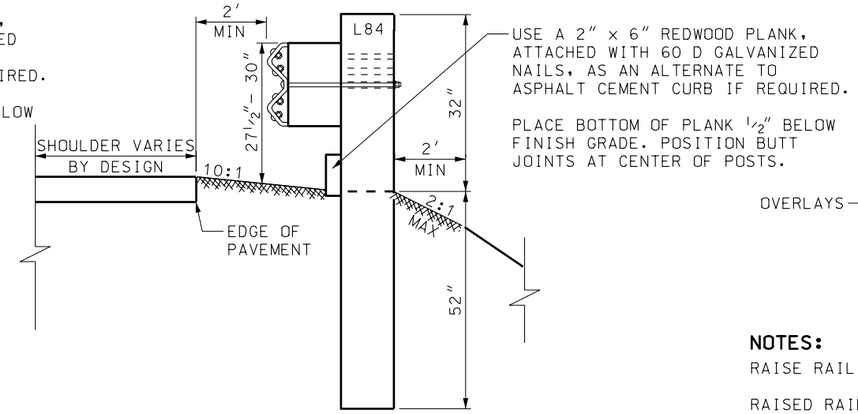

INITIAL LONG POST INSTALLATION
USE 84″ LONG POSTS

NOTE:
USE THIS INSTALLATION WHEN THE MINIMUM 2′ DEFLECTION AREA BEHIND RAIL CANNOT BE PROVIDED.

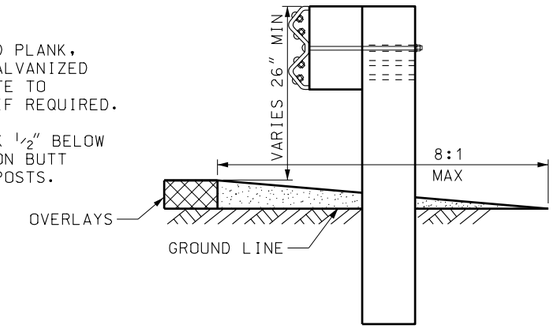

RAIL ELEMENT RAISED

NOTES:

RAISE RAIL ELEMENT WHEN OVERLAY IS REQUIRED.

RAISED RAIL ELEMENT WILL ACCOMMODATE 6″ TO 8″ OF OVERLAY MATERIAL.

SLOPE OF SHOULDER INTO FACE OF RAIL NOT TO EXCEED 8:1.

RAISE REDWOOD PLANKING WHEN REQUIRED.

RAISING THE RAIL ELEMENT TO MAXIMUM HEIGHT REQUIRED BEFORE THE MINIMUM HEIGHT OF THE RAIL ELEMENT ABOVE GROUND LEVEL CAN BE REDUCED TO THE MINIMUM OF 25″.

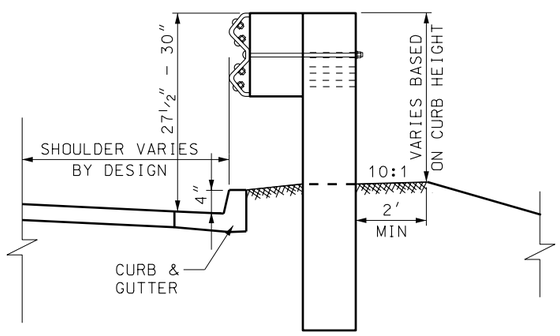

INSTALLATION W/CURB & GUTTER
USE 72″ LONG POSTS

NOTE:
USE A MAXIMUM 4″ CURB HEIGHT.
PLACE TOP FACE OF CURB EVEN WITH FACE OF RAIL ELEMENT

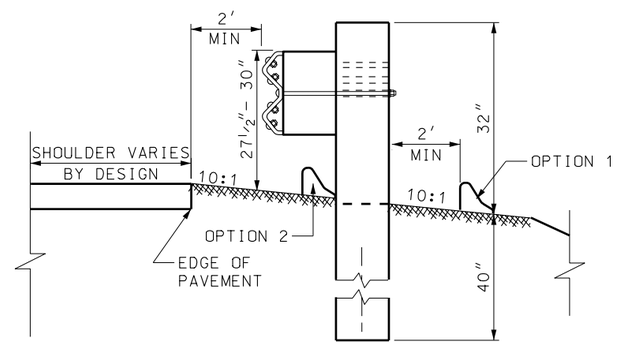

INSTALLATION W/ASPHALT CONCRETE CURB
USE 72″ LONG POSTS

OPTION 1: PREFERED INSTALLATION.

OPTION 2: PLACE FACE OF ASPHALT CONCRETE CURB EVEN WITH FACE OF RAIL OR BEHIND FACE OF RAIL.

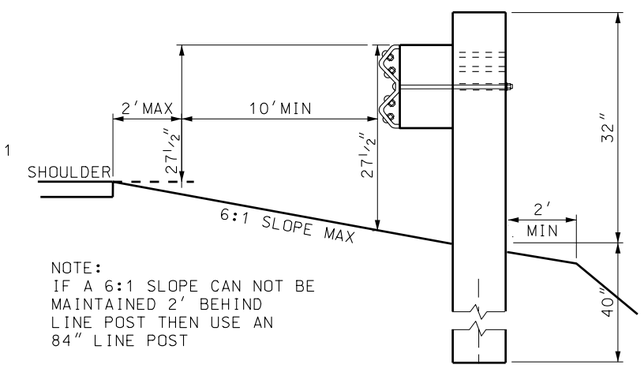

NOTE:
IF A 6:1 SLOPE CAN NOT BE MAINTAINED 2′ BEHIND LINE POST THEN USE AN 84″ LINE POST

OFFSET BARRIER INSTALLATION

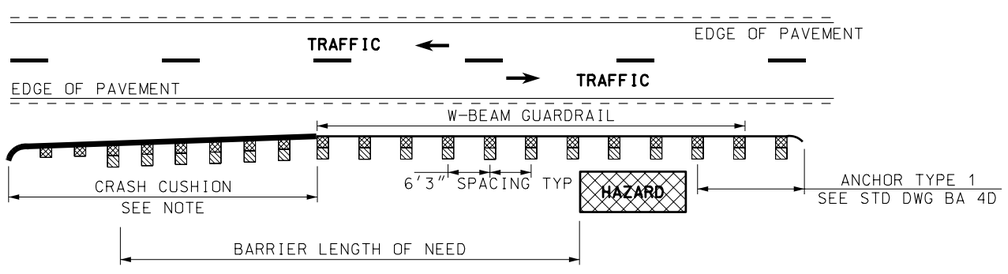

TYPICAL INSTALLATION

NOTE:
CRASH CUSHION REQUIRED WHEN BARRIER END IS WITHIN 1.2 TIMES AASHTO ROADSIDE DESIGN GUIDE CLEAR ZONE.

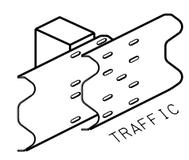

SPLICE LAP DETAIL

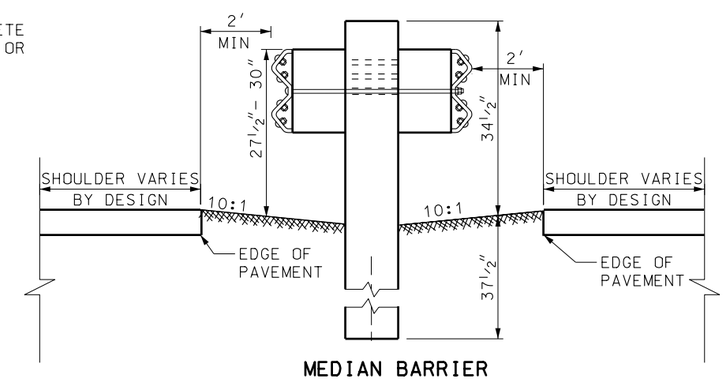

MEDIAN BARRIER

NOTES:
RAISE BOTH RAIL ELEMENTS AS PER RAISE ELEMENT DETAIL WHEN REQUIRED.

ATTACH REQUIRED DELINEATION ON THE POST.

REVISIONS

NO.	DATE	APPR.	REMARKS
1	04/29/04	B.A.	SHADING FIXED IN DETAILS.

UTAH DEPARTMENT OF TRANSPORTATION
STANDARD DRAWINGS FOR ROAD AND BRIDGE CONSTRUCTION
SALT LAKE CITY, UTAH

RECOMMENDED FOR APPROVAL — APR.29,2004 DATE
CHAIRMAN STANDARDS COMMITTEE APPROVED — APR.29,2004 DATE
DEPUTY DIRECTOR

STANDARD DRAWING TITLE
W-BEAM GUARDRAIL INSTALLATIONS

STD DWG
BA 4E

DGN File:N:\Esd\Standard Drawings\Imperial\2004Approved\Changes\Approved\BA04E.dgn
27-MAY-2004

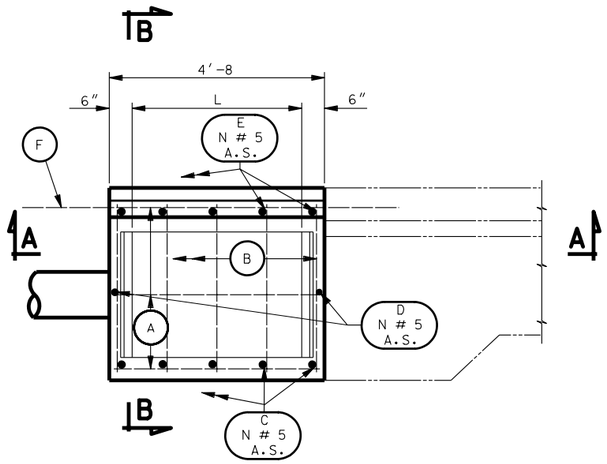

PLAN VIEW

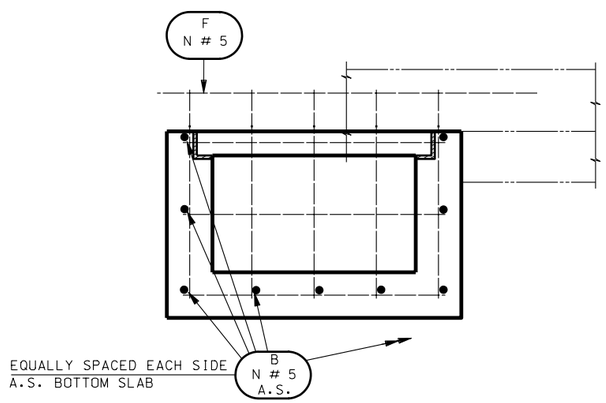

SECTION A-A

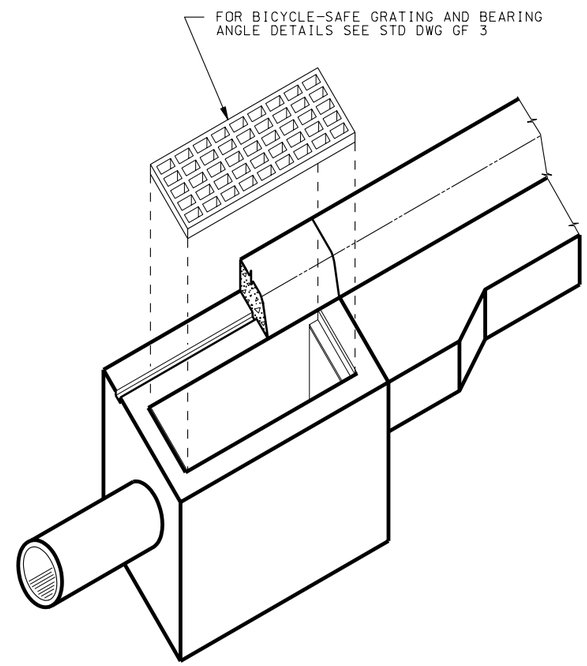

ISOMETRIC VIEW

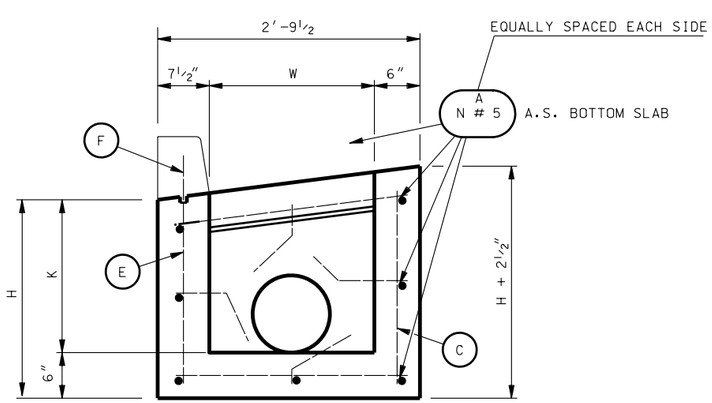

SECTION B-B

NOTES:

1. USE COATED DEFORMED BILLET REINFORCING STEEL BARS CONFORMING TO AASHTO M 284 OR M 111 AND M 31 GRADE 60 RESPECTIVELY.
2. USE STRUCTURAL STEEL CONFRONTING TO AASHTO M 270 GRADE 36 EXCEPT WHERE NOTED OTHERWISE.
3. FOR GRATING AND BEARING DETAILS SEE STD DWG GF 3.
4. USE CLASS AA(AE) CAST-IN-PLACE CONCRETE EXCEPT WHERE SPECIFIED OTHERWISE.
5. USE TYPE II CEMENT (LOW ALKALI) UNLESS SPECIFIED OTHERWISE IN SPECIAL PROVISIONS.
6. CHAMFER ALL EXPOSED CONCRETE CORNERS 3/4" EXCEPT WHERE NOTED OTHERWISE.
7. PROVIDE 2" CONCRETE COVER TO REINFORCING STEEL EXCEPT WHERE NOTED OTHERWISE.
8. INCLUDE CONCRETE QUANTITIES FOR CURB & GUTTER IN ROADWAY QUANTITIES.
9. DEDUCT CONCRETE DISPLACED BY PIPE(S) (TABLE"A") FROM CONCRETE QUANTITIES GIVEN IN SCHEDULE OF INSTALLATION.
10. CUT AND BEND REINFORCING STEEL AS NECESSARY TO CLEAR PIPE(S) AND MAINTAIN 2" CLEARANCE.
11. FOR LOCATION AND SIZE OF PIPE(S) SEE ROADWAY PLANS.
12. QUANTITIES IN TABLE "A" ARE FOR PIPE THROUGH 6" WALL THICKNESS.

DESIGN DATA

HS-20-44 OR INTERSTATE ALTERNATE MILITARY LOADING IN ACCORDANCE WITH AASHTO AND INTERIM SPECIFICATIONS.

STRUCTURAL CONCRETE: Fc = 1,400 psi REINF. STEEL: Fs = 24,000 psi
STRUCTURAL STEEL: Fs = 20,000 psi n = 8

QUANTITIES

SEE SCHEDULE OF INSTALLATION

SCHEDULE OF INSTALLATION

LINE NO	DIMENSIONS				MAX. PIPE DIA.		REINFORCING STEEL												QUANTITIES	
							A		B		C		D		E		F		REINF. STEEL	CONC.
	H	W	L	K	R.C.P.	C.M.P.	N	LENGTH	N	LENGTH	N	LENGTH	N	LENGTH	N	LENGTH	N	LENGTH	lbs.	Cu.Yds.
1	2'-0	1'-8	3'-8	1'-6	———	15"	7	4'-4	9	2'-5	5	1'-9	2	1'-8	5	2'-0	1	7'-0	84.7	0.65
2	2'-6	1'-8	3'-8	2'-0	12"	18"	9	4'-4	11	2'-5	5	2'-3	2	2'-2	5	2'-6	1	7'-0	105.0	0.79
3	3'-0	1'-8	3'-8	2'-6	15"	18"	9	4'-4	11	2'-5	5	2'-9	2	2'-8	5	3'-0	1	7'-0	111.3	0.93
4	3'-6	1'-8	3'-8	3'-0	15"	18"	11	4'-4	13	2'-5	5	3'-3	2	3'-2	5	3'-6	1	7'-0	131.6	1.07
5	4'-0	1'-8	3'-8	3'-6	15"	18"	11	4'-4	13	2'-5	5	3'-9	2	3'-8	5	4'-0	1	7'-0	137.9	1.21
6	4'-6	1'-8	3'-8	4'-0	15"	18"	13	4'-4	15	2'-5	5	4'-3	2	4'-2	5	4'-6	1	7'-0	158.2	1.35
7	5'-0	1'-8	3'-8	4'-6	15"	18"	13	4'-4	15	2'-5	5	4'-9	2	4'-8	5	5'-0	1	7'-0	164.5	1.49

TABLE "A"

R.C.P.		C.M.P.	
DIA.	CU. YD.	DIA.	CU. YD.
12"	.017	12"	.015
15"	.037	15"	.023
		18"	.033

REVISIONS

NO.	DATE	APPR.	REMARKS
1	04/29/04	B.A.	SHADING FIXED IN DETAILS.

UTAH DEPARTMENT OF TRANSPORTATION
STANDARD DRAWINGS FOR ROAD AND BRIDGE CONSTRUCTION
SALT LAKE CITY, UTAH

RECOMMENDED FOR APPROVAL — APR.29,2004 DATE

CHAIRMAN STANDARDS COMMITTEE APPROVED — APR.29,2004 DATE

DEPUTY DIRECTOR

STANDARD DRAWING TITLE: STANDARD CACH BASIN

STD DWG CB 1

DGN File:N:\Esd\Standard.Drawings\Imperial\2004\Approved\Changed\Approved\cb01.dgn

27-MAY-2004

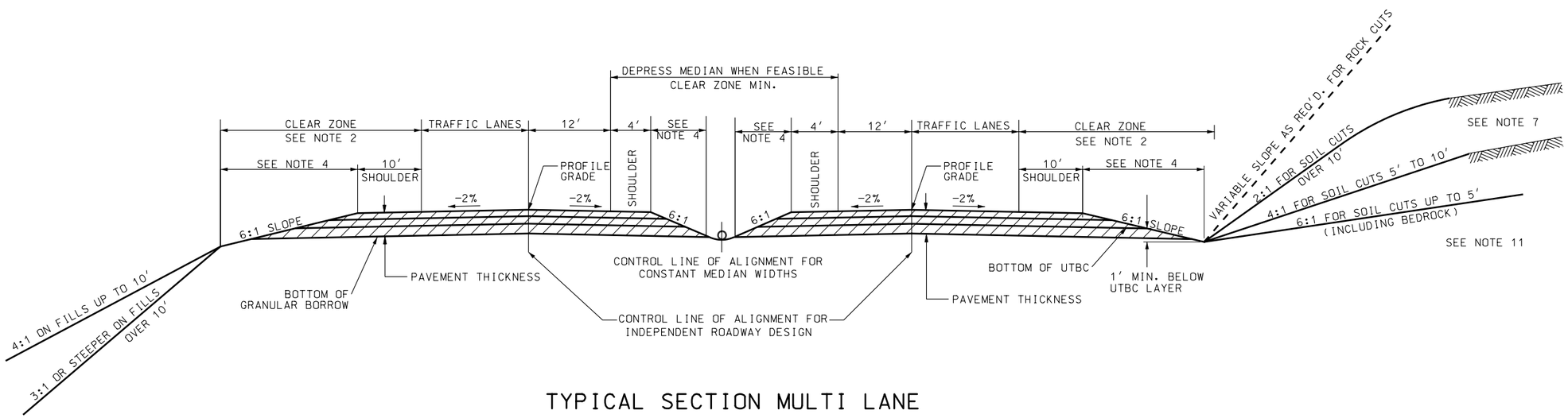

TYPICAL SECTION MULTI LANE

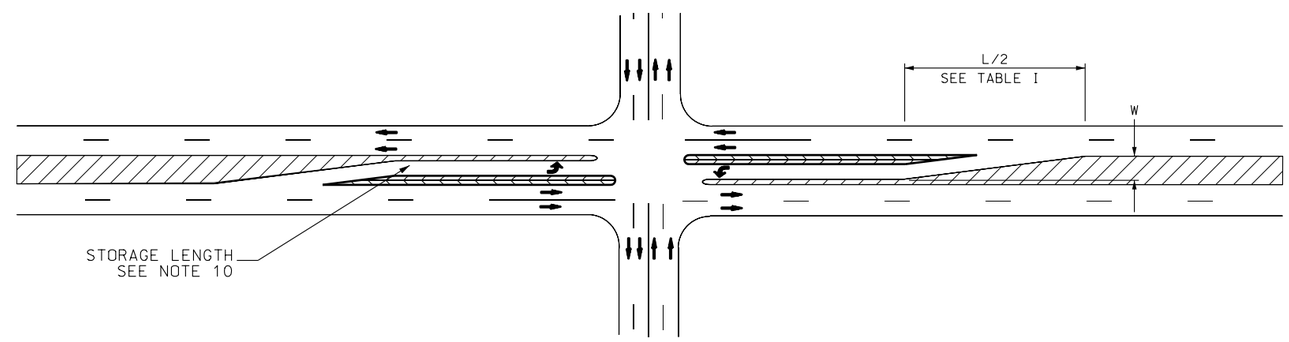

TYPICAL MEDIAN LEFT TURN LANE

FOR MEDIANS GREATER THAN 28′

NOTES:

1. USE THE CURRENT EDITION OF AASHTO A POLICY ON GEOMETRIC DESIGN OF HIGHWAYS AND STREETS FOR DESIGN OF ROADWAY ELEMENTS.
2. USE THE CURRENT EDITION OF AASHTO ROADSIDE DESIGN GUIDE FOR CLEAR ZONE REQUIREMENTS. CLEAR ZONE MAY EXTEND INTO CUT OR FILL SLOPES.
3. STANDARDS SHOWN ARE RECOMMENDED VALUES. EXCEED STANDARDS IF CONDITIONS PERMIT.
4. IN FILL CONDITIONS MAINTAIN A CONSTANT SLOPE FROM THE EDGE OF THE PAVEMENT TO THE OUTER EDGE OF THE CLEAR ZONE. IN CUT CONDITIONS MAINTAIN A CONSTANT SLOPE FROM THE EDGE OF THE PAVEMENT TO THE BOTTOM OF THE GRANULAR BORROW LAYER OR PROVIDE OTHER MEASURES TO DRAIN ALL PAVEMENT THICKNESS LAYERS. MAINTAIN A MINIMUM OF ONE FOOT VERTICAL DISTANCE FROM THE BOTTOM OF THE UTBC LAYER TO THE BOTTOM OF THE CUT DITCH. THERE MAY BE CUT FORESLOPES AND BACKSLOPES IN THE CLEAR ZONE.
5. TRANSITION FROM FLAT TO STEEPER CUT AND FILL SLOPES IN SUFFICIENT DISTANCE TO PROVIDE A NATURAL PLEASING APPEARANCE.
6. PAVEMENT THICKNESS CONSISTS OF HARD SURFACING, UTBC AND GRANULAR BORROW (IF USED).
7. INSTALL SURFACE DITCH (OPTIONAL) WHEN SHEET FLOW DRAINAGE IS TOWARDS CUT SLOPE. DRAIN SURFACE DITCH TO NATURAL DRAINAGE OR ROADSIDE DITCH. PROVIDE OTHER MEASURES TO PREVENT ERODING CUT SLOPES IF SURFACE DITCH IS OMITTED. SEE STD DWG DD 2 FOR DETAILS
8. SEE STD DWG DD 4 FOR TYPICAL DETAILS FOR SECTION ON CURVE AND SECTION ON TANGENT. SEE STD DWG DD 2 FOR TYPICAL SECTION ON DITCH FLARING AND BENCHED SLOPE.
9. USE FLAT MEDIAN WHERE MEDIAN IS NOT OF SUFFICIENT WIDTH TO PROVIDE A DEPTH OF 1 FOOT BELOW THE PAVEMENT THICKNESS. REDUCE SLOPE TO 10:1 OR LESS AND PAVE THE ENTIRE AREA.
10. USE A CAPACITY ANALYSIS TO DETERMINE THE LENGTH OF STORAGE REQUIRED FOR TURN LANE. A MINIMUM LENGTH OF 100 FEET IS REQUIRED.
11. THE SLOPES SHOWN FOR CUT AND FILL HEIGHTS ARE SUGGESTED VALUES. SLOPES MAY DEVIATE FROM THESE SUGGESTED VALUES TO MEET PROJECT SPECIFIC REQUIREMENTS.
12. RANGE OF SUPERELEVATION IS THE PAVED WIDTH.

TABLE I	
SPEED	FORMULA
FOR SPEEDS OF 40 MPH AND LESS	$L = \frac{WS^2}{60}$
FOR SPEEDS OF 45 MPH AND GREATER	L= WS

WHERE:
L = TAPER LENGTH IN FEET
W = WIDTH OF OFFSET IN FEET
S = SPEED IN MPH

NO.	DATE	APPR.	REMARKS
1	04/29/04	B.A.	SHADING FIXED IN DETAILS.

REVISIONS

UTAH DEPARTMENT OF TRANSPORTATION
STANDARD DRAWINGS FOR ROAD AND BRIDGE CONSTRUCTION
SALT LAKE CITY, UTAH

RECOMMENDED FOR APPROVAL — APR.29,2004 DATE
CHAIRMAN STANDARDS COMMITTEE APPROVED — APR.29,2004 DATE
DEPUTY DIRECTOR

STANDARD DRAWING TITLE
RURAL
MULTI LANE HIGHWAYS
OTHER THAN FREEWAYS

STD DWG
DD 11

DGN File:N:\Std\Standard Drawings\Imperial\2004\Approved\Changes\Approved\DD11.dgn
27-MAY-2004

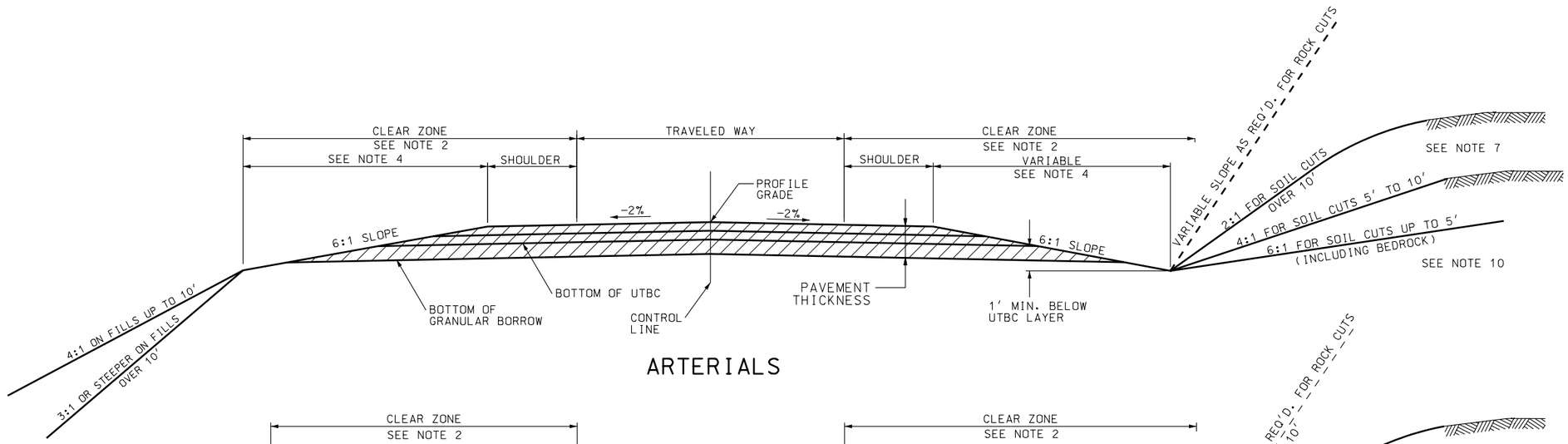

ARTERIALS

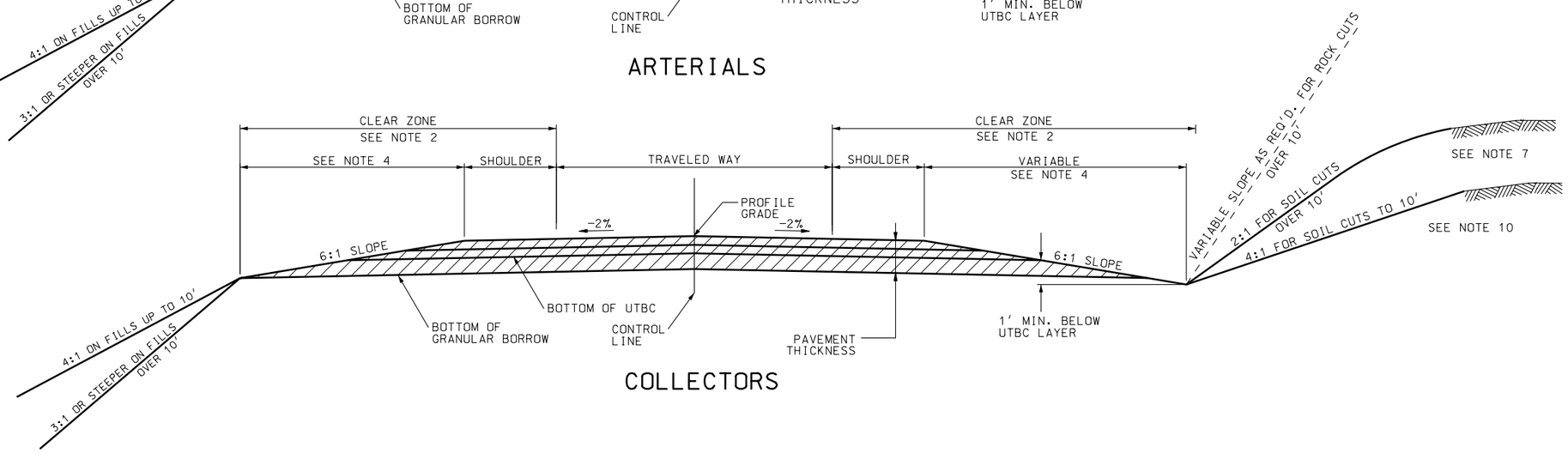

COLLECTORS

NOTES:

1. USE CURRENT EDITION OF THE AASHTO A POLICY ON GEOMETRIC DESIGN OF HIGHWAYS AND STREETS FOR DESIGN OF ROADWAY ELEMENTS.
2. USE THE CURRENT EDITION OF AASHTO ROADSIDE DESIGN GUIDE FOR CLEAR ZONE REQUIREMENTS. CLEAR ZONE MAY EXTEND INTO CUT OR FILL SLOPES.
3. STANDARDS SHOWN ARE RECOMMENDED VALUES. EXCEED STANDARDS IF CONDITIONS PERMIT.
4. IN FILL CONDITIONS MAINTAIN A CONSTANT SLOPE FROM THE EDGE OF THE PAVEMENT TO THE OUTER EDGE OF THE CLEAR ZONE. IN CUT CONDITIONS MAINTAIN A CONSTANT SLOPE FROM THE EDGE OF THE PAVEMENT TO THE BOTTOM OF THE GRANULAR BORROW LAYER OR PROVIDE OTHER MEASURES TO DRAIN ALL PAVEMENT THICKNESS LAYERS. MAINTAIN A MINIMUM OF ONE FOOT VERTICAL DISTANCE FROM THE BOTTOM OF THE UTBC LAYER TO THE BOTTOM OF THE CUT DITCH. THERE MAY BE CUT FORESLOPES AND BACKSLOPES IN THE CLEAR ZONE.
5. TRANSITION FROM FLAT TO STEEPER CUT AND FILL SLOPES IN SUFFICIENT DISTANCE TO PROVIDE A NATURAL PLEASING APPEARANCE.
6. PAVEMENT THICKNESS CONSISTS OF HARD SURFACING, UTBC AND GRANULAR BORROW (IF USED).
7. INSTALL SURFACE DITCH (OPTIONAL) WHEN SHEET FLOW DRAINAGE IS TOWARDS CUT SLOPE. DRAIN SURFACE DITCH TO NATURAL DRAINAGE OR ROADSIDE DITCH. PROVIDE OTHER MEASURES TO PREVENT ERODING CUT SLOPES IF SURFACE DITCH IS OMITTED. SEE STD DWG DD 2 FOR DETAILS
8. SEE STD DWG DD 4 FOR TYPICAL DETAILS FOR SECTION ON CURVE AND SECTION ON TANGENT. SEE STD DWG DD-2 FOR TYPICAL SECTIONS ON DITCH FLARING AND BENCHED SLOPE.
9. USE A MINIMUM 0.3 PERCENT PROFILE GRADE THROUGHOUT CUT OR CURBED SECTIONS. LEVEL GRADES PERMITTED ON FILL SECTIONS.
10. THE SLOPES SHOWN FOR CUT AND FILL HEIGHTS ARE SUGGESTED VALUES. SLOPES MAY DEVIATE FROM THESE SUGGESTED VALUES TO MEET PROJECT SPECIFIC REQUIREMENTS.
11. RANGE OF SUPERELEVATION IS THE PAVED WIDTH.

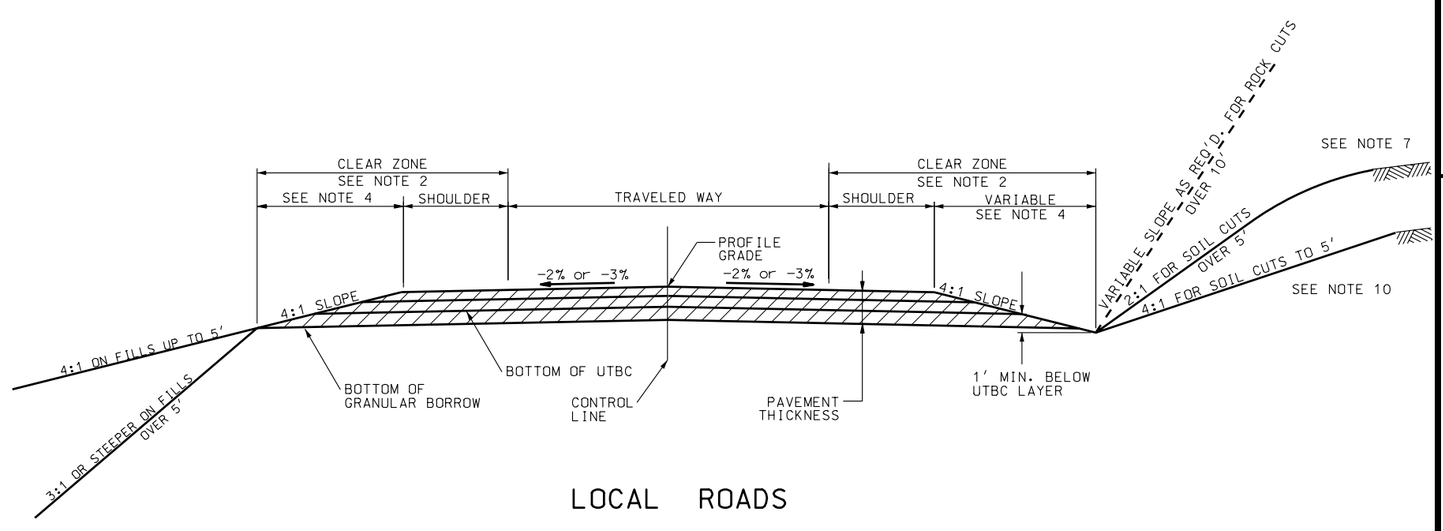

LOCAL ROADS

REVISIONS

NO.	DATE	APPR.	REMARKS
1	04/29/04	B.A.	SHADING FIXED IN DETAILS.

UTAH DEPARTMENT OF TRANSPORTATION
STANDARD DRAWINGS FOR ROAD AND BRIDGE CONSTRUCTION
SALT LAKE CITY, UTAH

RECOMMENDED FOR APPROVAL — APR.29,2004 DATE

CHAIRMAN STANDARDS COMMITTEE APPROVED — APR.29,2004 DATE

DEPUTY DIRECTOR

STANDARD DRAWING TITLE: RURAL TWO LANE HIGHWAYS

STD DWG DD 12

DGN File: N:\Esa\Standard Drawings\Imperial\2004\Approved\Changed\Approved\DD12.dgn

27-MAY-2004

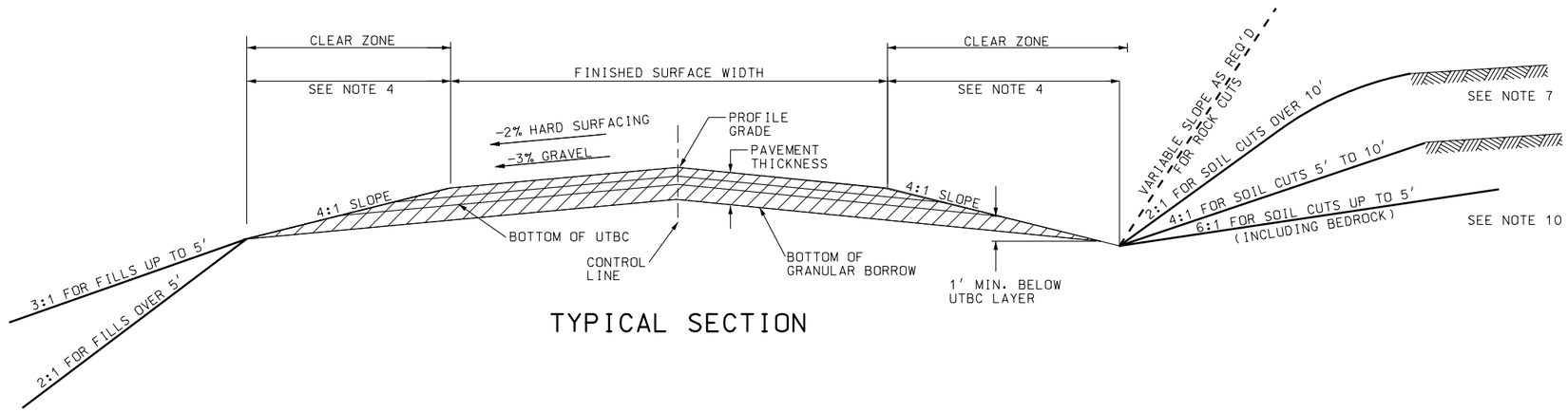

TYPICAL SECTION

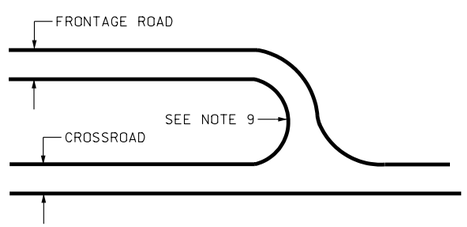

INTERSECTION OF
FRONTAGE ROAD AND CROSSROAD

NOTES:

1. USE THE CURRENT EDITION OF AASHTO A POLICY ON GEOMETRIC DESIGN OF HIGHWAYS AND STREETS FOR DESIGN OF ROADWAY ELEMENTS.
2. USE THE CURRENT EDITION OF AASHTO ROADSIDE DESIGN GUIDE FOR CLEAR ZONE REQUIREMENTS. CLEAR ZONE MAY EXTEND INTO CUT OR FILL SLOPES.
3. STANDARDS SHOWN ARE RECOMMENED VALUES. EXCEED STANDARDS IF CONDITIONS PERMIT.
4. IN FILL CONDITIONS MAINTAIN A CONSTANT SLOPE FROM THE EDGE OF THE FINISHED SURFACE TO THE CLEAR ZONE. IN CUT CONDITIONS MAINTAIN A CONSTANT SLOPE FROM THE EDGE OF THE FINISHED SURFACE TO THE BOTTOM OF THE GRANULAR BORROW LAYER OR PROVIDE OTHER MEASURES TO DRAIN ALL PAVEMENT THICKNESS LAYERS. MAINTAIN A MINIMUM OF ONE FOOT VERTICAL DISTANCE FROM THE BOTTOM OF THE UTBC LAYER TO THE BOTTOM OF THE CUT DITCH. THERE MAY BE CUT FORESLOPES AND BACKSLOPES IN THE CLEAR ZONE.
5. TRANSITION FROM FLAT TO STEEPER CUT AND FILL SLOPES IN SUFFICIENT DISTANCE TO PROVIDE A NATURAL PLEASING APPEARANCE.
6. PAVEMENT THICKNESS CONSISTS OF HARD SURFACING, UTBC AND GRANULAR BORROW (IF USED).
7. INSTALL SURFACE DITCH (OPTIONAL) WHEN SHEET FLOW DRAINAGE IS TOWARDS CUT SLOPE. DRAIN SURFACE DITCH TO NATURAL DRAINAGE OR ROADSIDE DITCH. PROVIDE OTHER MEASURES TO PREVENT ERODING CUT SLOPES IF SURFACE DITCH IS OMITTED.
8. SEE STD DWG DD 4 FOR TYPICAL DETAILS FOR SECTION ON CURVE AND SECTION ON TANGENT. SEE STD DWG DD 2 FOR TYPICAL SECTION ON DITCH FLARING AND BENCHED SLOPE.
9. DESIGN FRONTAGE ROAD WITH A MINIMUM TURNING RADIUS OF 60 FEET AT INTERSECTIONS. A TURNING RADIUS OF 50 FEET MAY BE USED WHERE NO REGULAR LARGE VEHICLE MOVEMENTS ARE EXPECTED.
10. THE SLOPES SHOWN FOR CUT AND FILL HEIGHTS ARE SUGGESTED VALUES. SLOPES MAY DEVIATE FROM THESE SUGGESTED VALUES TO MEET PROJECT SPECIFIC REQUIREMENTS.
11. RANGE OF SUPERELEVATION IS THE PAVED WIDTH.

REVISIONS

NO.	DATE	APPR.	REMARKS
1	04/29/04	B.A.	SHADING FIXED IN DETAILS.

UTAH DEPARTMENT OF TRANSPORTATION
STANDARD DRAWINGS FOR ROAD AND BRIDGE CONSTRUCTION
SALT LAKE CITY, UTAH

RECOMMENDED FOR APPROVAL — APR.29,2004 DATE
CHAIRMAN STANDARDS COMMITTEE APPROVED — APR.29,2004 DATE
DEPUTY DIRECTOR

STANDARD DRAWING TITLE
FRONTAGE AND ACCESS ROADS (UNDER 50 ADT)

STD DWG
DD 13

DGN File:N:\Eng\Standard Drawings\Images\2004\Images\Chapman\Chapman\d0013.dgn
27-MAY-2004

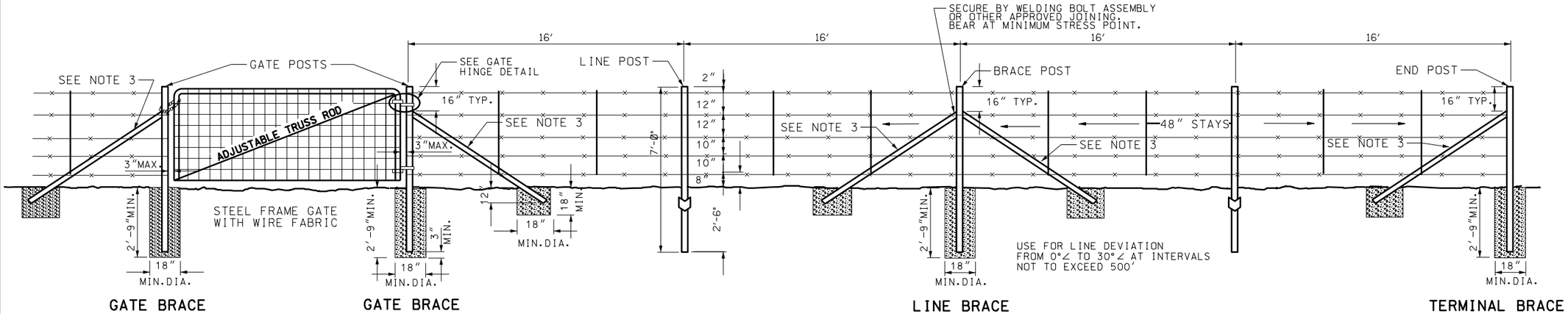

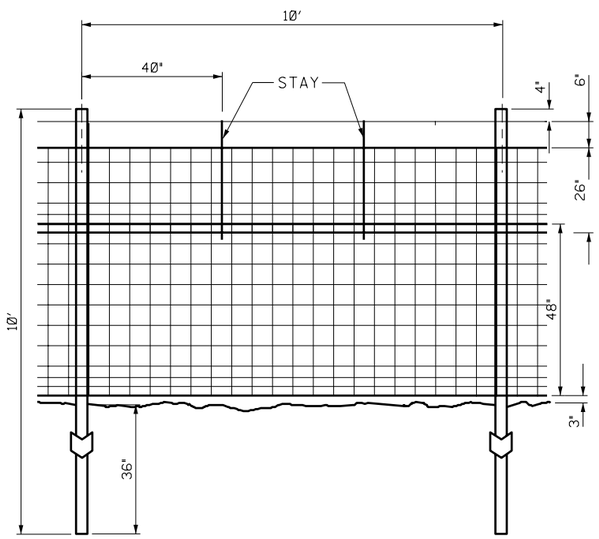

RIGHT OF WAY FENCE TYPE G (DEER BARRIER)

FOR FENCETYPES A, B, D, E AND F POST SIZE, SPACING AND BRACING ARE AS SHOWN IN TYPICAL INSTALLATION ABOVE. SPACE 2 STAYS EVENLY BETWEEN EACH SET OF POSTS.

INSTALLATION WITH METAL POSTS
(TYPICAL)

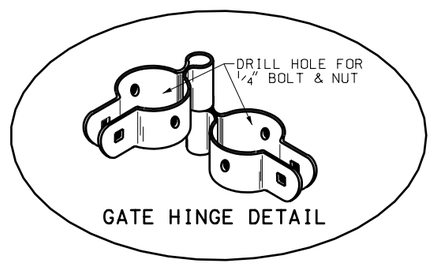

GATE HINGE DETAIL

NOTES:

1. SET METAL POSTS IN CLASS "B" CONCRETE.
2. LINE POSTS FOR TYPE A,B,D,,E & F FENCE
   A-TEE CHANNELS OR "Y" OR "U" SECTIONS, MINIMUM WEIGHT 1.33 lb/ft. ON LENGTH.
   B-STEEL PIPES,1.900" OUTSIDE DIAMETER SCHEDULE 40 PIPE, WEIGHT 2.72 lb/ft OF LENGTH OR HIGH TENSILE TRIPLE COATED STEEL PIPE, WEIGHT 2.23 lb/ft OF LENGTH.
   C-ALTERNATE LINE POSTS APPROVED BY THE ENGINEER TO HAVE A MINIMUM RESISTING SECTION MODULUS OF 0.32" PERPENDICULAR AND 0.12" PARALLEL TO THE FENCE LINE. ANCHOR PLATES TO POSTS, MINIMUM SURFACE AREA OF 20", MINIMUM 18 GAUGE THICKNESS AND MINIMUM WEIGHT 0.67 lb/EACH
3. BRACE AND CORNER PSTS (ASTM A 36)
   A-BRACE AND CORNER POSTS FOR TYPE A,B,D,E & F FENCES USE 2½"x 2½"x ¼" ANGLES, MINIMUM WEIGHT 4.10 lb/ft.
   B-BRACES FOR TYPE A,B,D,E& F FENCES, USE 2"x 2" x ¼" ANGLES, MINIMUM WEIGHT 3.19 lb/ft.
   C-TYPE G: PIPE FOR CORNER AND BRACE POSTS, USE 2.375" OUTSIDE DIAMETER, WEIGHT 3.65 lb/ft. OR HIGH TENSILE TRIPLE COATED STEEL, 2.375" OUTSIDE DIAMETER WEIGHT 3.11 lb/ft.
4. LINE POSTS FOR TYPE A,B,D,E & F FENCE: 7′-0" LENGTH
   LINE POSTS FOR TYPE G FENCE: 10′-0"
5. TERMINATE MESH AND BARBER WIRE AT EACH CORNER POST.
6. USE CORNER POST BRACES ON ALL FENCE LINE DEVIATIONS GREATER THAN 30°. USE CORNER POST BRACES ON TYPE G FENCE WITH DEVIATIONS GREATER THAN 15°.
7. GALVANIZE METAL PER (ASTM A 702) OR PAINTED (ASTM A 123)

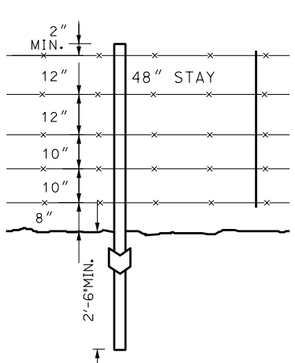

TYPE A

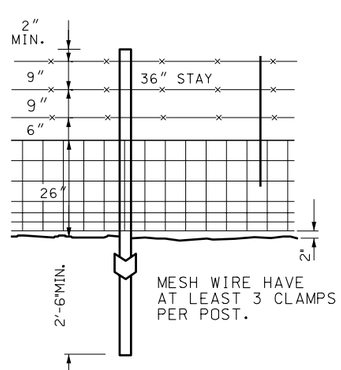

TYPE B

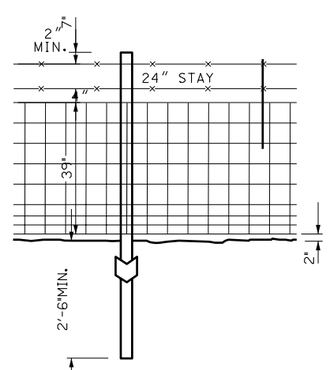

TYPE D

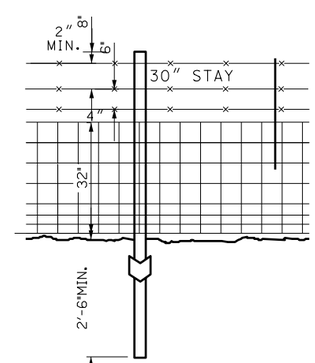

TYPE E

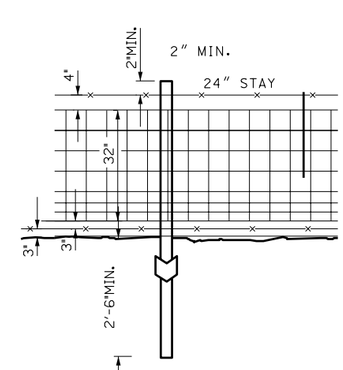

TYPE F

TO BE INSTALLED IN DEER COUNTRY

NO.	DATE	APPR.	REMARKS
1	04/01/04	K.V.	REVISED NOTE 3C

REVISIONS

UTAH DEPARTMENT OF TRANSPORTATION
STANDARD DRAWINGS FOR ROAD AND BRIDGE CONSTRUCTION
SALT LAKE CITY, UTAH

RECOMMENDED FOR APPROVAL — APR.29,2004 DATE

CHAIRMAN STANDARDS COMMITTEE APPROVED — APR.29,2004 DATE

DEPUTY DIRECTOR

RIGHT OF WAY FENCE AND GATES (METAL POST)

STANDARD DRAWING TITLE

STD DWG
FG 2A

DGN File:N:\Esd\Standard Drawings\Imperial\2004Approved\Changes1Approved\fg02a.dgn

27-MAY-2004

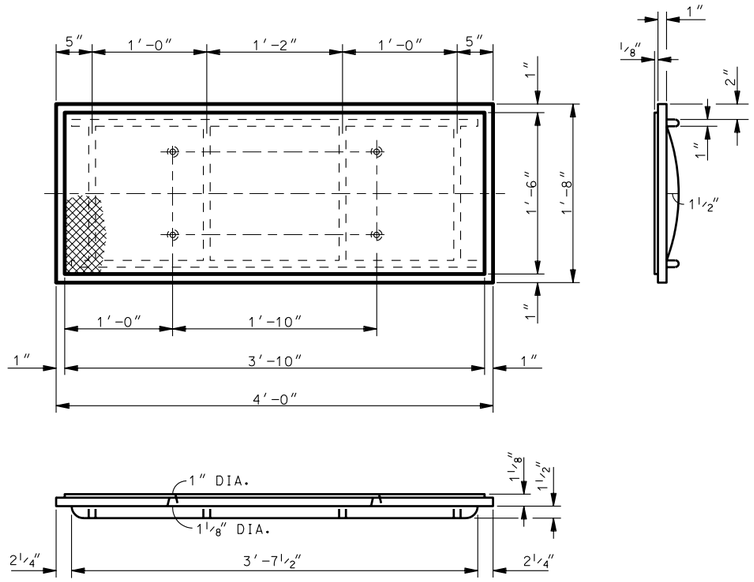

SOLID COVER DETAILS

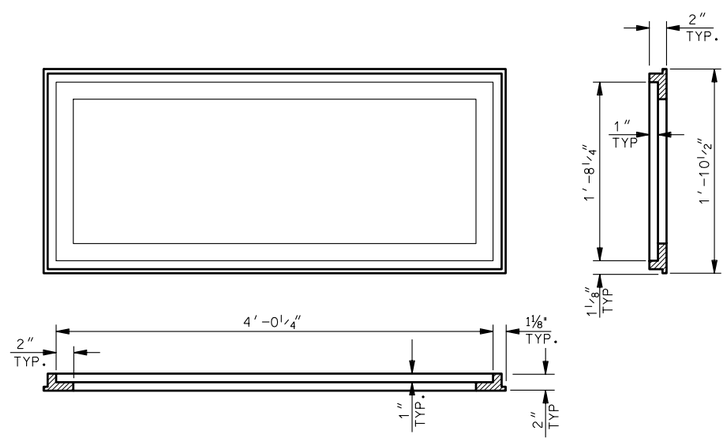

FRAME DETAILS

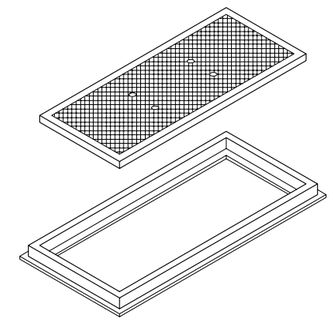

NOTES:

1. FURNISH SOLID COVER AND FRAME IN EITHER DUCTILE IRON (ASTM A 536, GRADE 60) OR CAST GRAY IRON: AASHTO M 105, CLASS 30B (ASTM A 48)
2. INSTALLATION REQUIRES SUPPORT UNDER LONGITUDINAL AXIS OF FRAME, ORIENT GRATE WITH DIRECTION OF FLOW.

DESIGN DATA

MS 18 (HS-20) OR INTERSTATE ALTERNATE LOADING IN ACCORDANCE WITH CURRENT AASHTO AND INTERIM SPECIFICATIONS.

DUCTILE IRON AND STRUCTURAL STEEL: Fs = 20,000 psi

REVISIONS

NO.	DATE	APPR.	REMARKS
1	04/29/04	B.A.	SHADING FIXED IN DETAILS.

UTAH DEPARTMENT OF TRANSPORTATION
STANDARD DRAWINGS FOR ROAD AND BRIDGE CONSTRUCTION
SALT LAKE CITY, UTAH

RECOMMENDED FOR APPROVAL — APR.29,2004 DATE

CHAIRMAN STANDARDS COMMITTEE APPROVED — APR.29,2004 DATE

DEPUTY DIRECTOR

SOLID COVER AND FRAME

STANDARD DRAWING TITLE

STD DWG

GF 5

DGN Files:N:\Esd\Standard Drawings\Imperial\2004Approved\Changed\Approved\gf05.dgn

27-MAY-2004

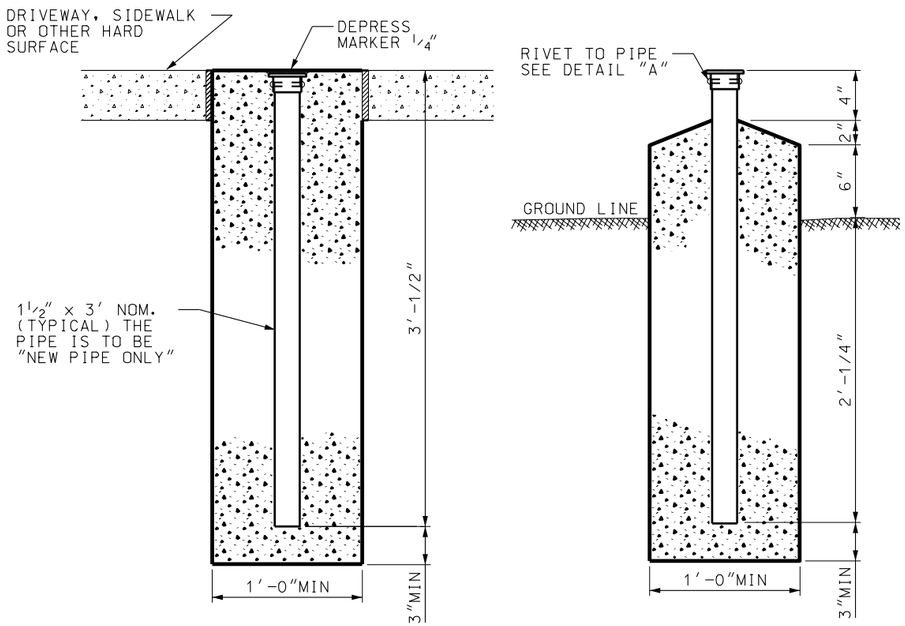

"A" "B"

ALTERNATE INSTALLATIONS

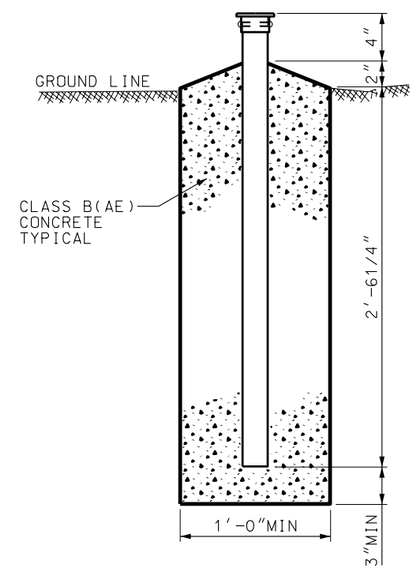

STANDARD INSTALLATION

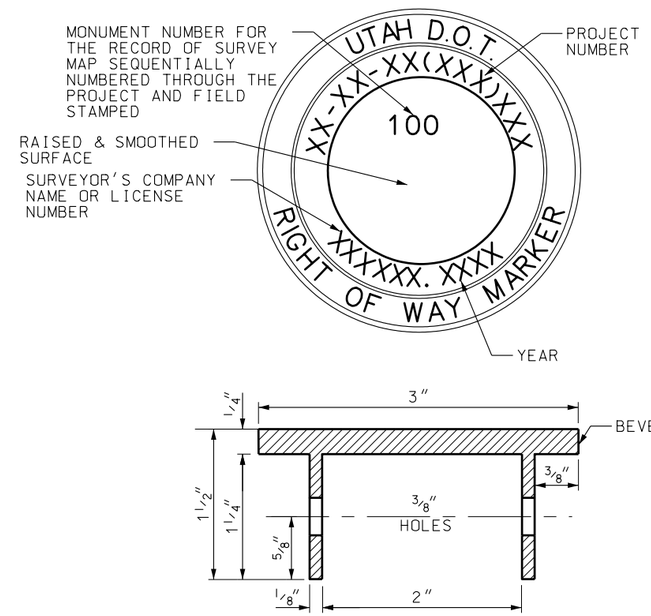

BRONZE CAP DETAIL "A"

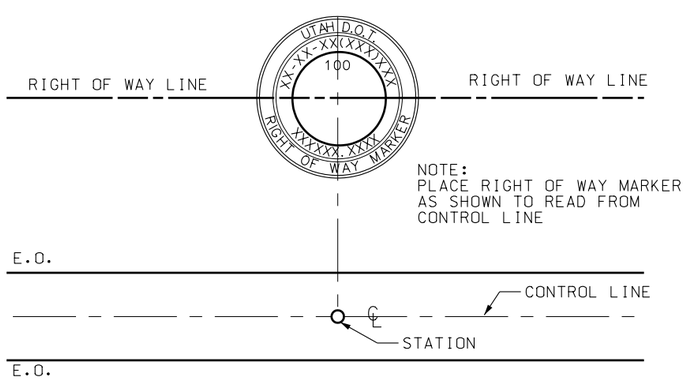

NOTES:

1. PLACE RIGHT OF WAY MARKERS AT EACH ANGLE POINT IN A RIGHT OF WAY LINE. PLACE RIGHT OF WAY MARKERS ON EACH RIGHT OF WAY LINE OPPOSITE THE PS, SC, CS AND ST OR OPPOSITE THE PC AND PT. WHERE THE RIGHT OF WAY PARALLELS THE CENTER LINE OF THE HIGHWAY AROUND A CURVE.
2. PLACE RIGHT OF WAY MARKERS IN ADDITION SO THAT NO INTERVAL WILL EXCEED 1000'. PLACE INTERMEDIATE MARKERS PREFERABLY ON SECTION LINES OR INTERSECTING PROPERTY LINES.
3. GRIND TO A SMOOTH SURFACE ALL EXPOSED SURFACES OF THE BRONZE CAP.
4. DEPRESS ALL LETTERS MINIMUM OF 1/16".
5. USE 3/16" HIGH LETTERS AND FIGURES.
6. USE ALTERNATE "A" INSTALLATION WHEN PLACING TOP OF BRONZE CAP FLUSH WITH HARD SURFACE AREA.
7. USE ALTERNATE "B" INSTALLATION WHEN PLACING MARKERS IN HEAVY BRUSH OR FOREST LANDS.
8. ON THE RECORD OF SURVEY MAP SHOW THE STATION, OFFSET, PROJECT COORDINATES AND ELEVATION.

REVISIONS

NO.	DATE	APPR.	REMARKS
1	04/29/04	B.A.	SHADING FIXED IN DETAILS.

UTAH DEPARTMENT OF TRANSPORTATION
STANDARD DRAWINGS FOR ROAD AND BRIDGE CONSTRUCTION
SALT LAKE CITY, UTAH

RECOMMENDED FOR APPROVAL — APR.29,2004 DATE

CHAIRMAN STANDARDS COMMITTEE APPROVED — APR.29,2004 DATE

DEPUTY DIRECTOR

RIGHT OF WAY MARKER

STANDARD DRAWING TITLE

STD DWG
GW 6

DGN File: N:\Esd\Standard Drawings\Imperial\2004\Approved\Change1\Approved\gw06.dgn

27-MAY-2004

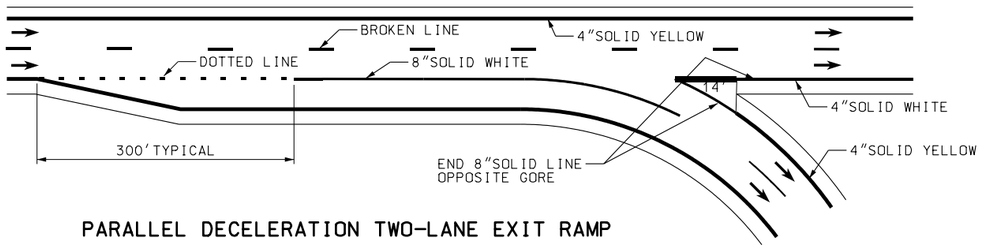

PARALLEL DECELERATION TWO-LANE EXIT RAMP

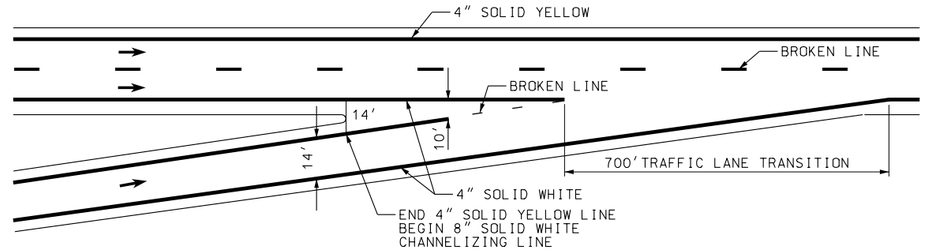

ENTRANCE RAMP

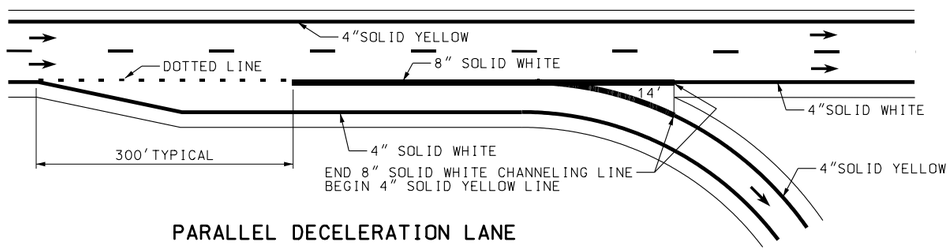

PARALLEL DECELERATION LANE

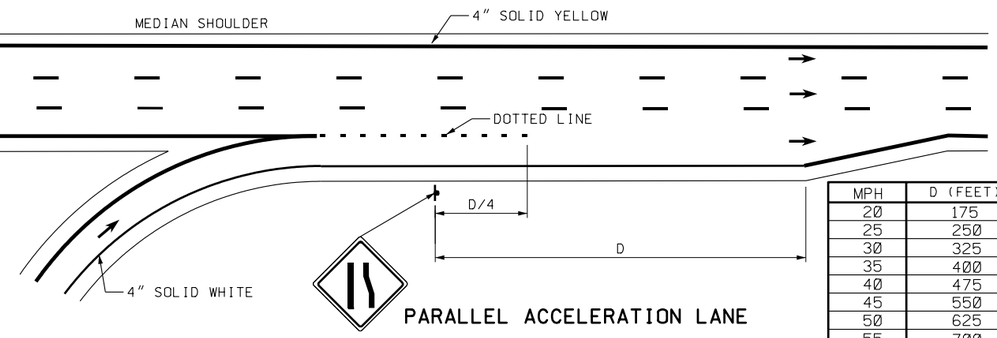

PARALLEL ACCELERATION LANE

MPH	D (FEET)
20	175
25	250
30	325
35	400
40	475
45	550
50	625
55	700
60	775
65	850
70	925
75	1000

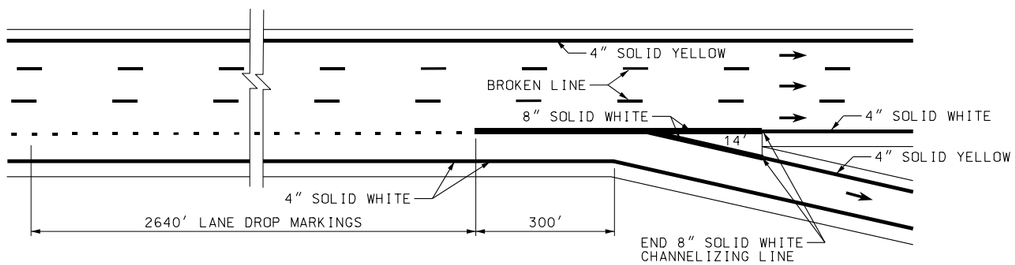

LANE DROP EXIT RAMP

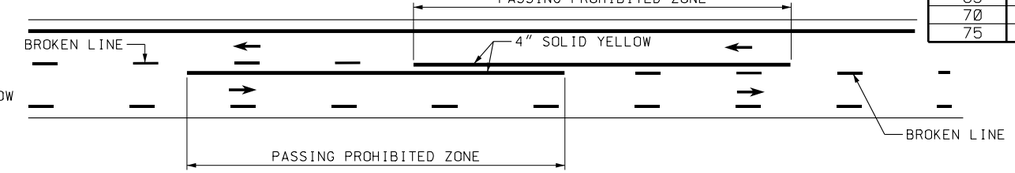

TWO-LANE TWO-WAY

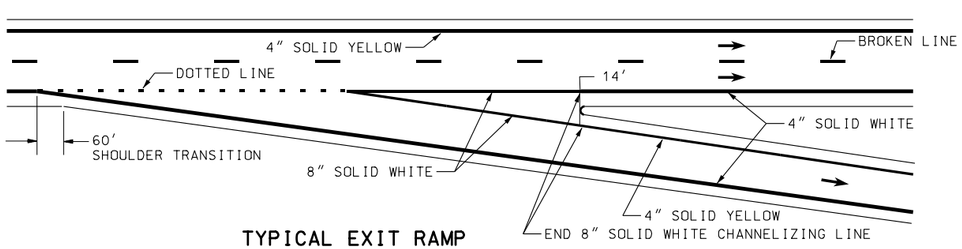

TYPICAL EXIT RAMP

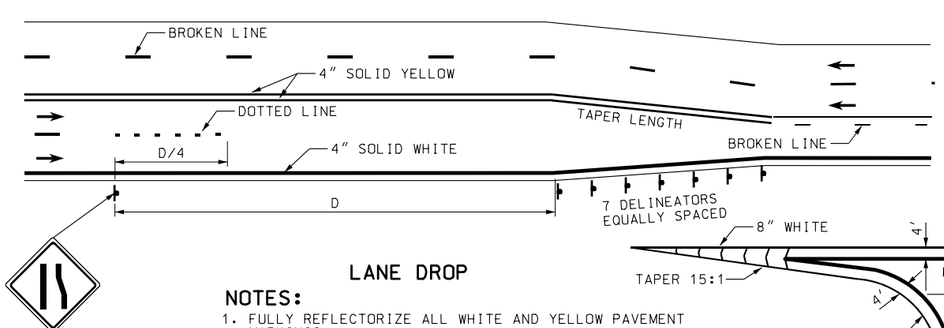

LANE DROP

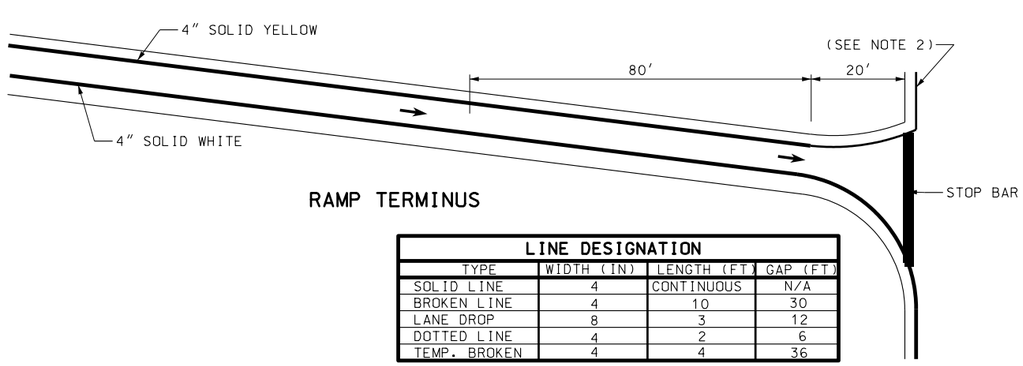

RAMP TERMINUS

LINE DESIGNATION			
TYPE	WIDTH (IN)	LENGTH (FT)	GAP (FT)
SOLID LINE	4	CONTINUOUS	N/A
BROKEN LINE	4	10	30
LANE DROP	8	3	12
DOTTED LINE	4	2	6
TEMP. BROKEN	4	4	36

NOTES:

1. FULLY REFLECTORIZE ALL WHITE AND YELLOW PAVEMENT MARKINGS.
2. TIE RAMP SHOULDER STRIPING INTO EXISTING SHOULDER STRIPING ON THE CROSS STREET WITH A GRADUAL TRANSITION. DISCONTINUE RAMP SHOULDER STRIPING AT THE CROSS STREET EDGE OF PAVEMENT.
3. PAINT A SHOULDER LINE IN AREAS WHERE PAVEMENT EXTENDS TO CURB AND GUTTER, TO DEFINE THE TRAVEL PATH OF A TYPICAL LANE (11 OR 12 FEET WIDE) WHEN THE LATERAL DISTANCE FROM OUTSIDE BROKEN LINE OR PERMISSIVE TURN LANE TO LIP OF GUTTER IS 16 FEET OR GREATER. THE REGION TRAFFIC ENGINEER CAN AUTHORIZE EXCEPTIONS TO EXLUDE SHOULDER LINES IN THESE AREAS.
4. PAINT THE LEFT EDGE OF EACH ROADWAY OF DIVIDED ROADS WITH A YELLOW SHOULDER LINE.
5. GET APPROVAL FOR CHANGES TO EXISTING OR INSTALLATION OF NEW PASS ZONES BY TRAFFIC AND SAFETY DIVISION.
6. CONTACT THE REGION TRAFFIC ENGINEER FOR STRIPING AND PAVEMENT MARKINGS ON MULTI-LANE RAMP TERMINI.

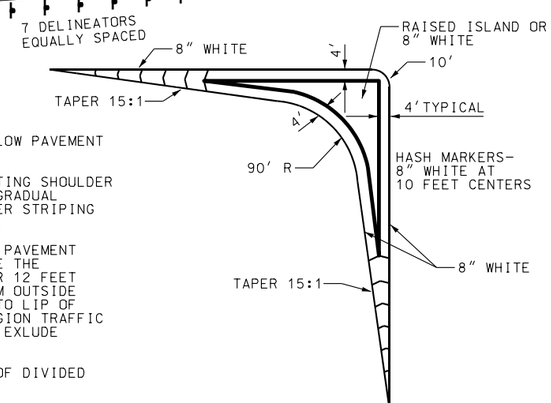

CHANNELIZING ISLAND

REVISIONS

NO.	DATE	APPR.	REMARKS
1	04/07/04	G.S.	CHANGE SKIP LINE TO BROKEN LINE IN DETAILS AND NOTE 3 TO BE CONSISTENT WITH MUTCD.
2	04/29/04	B.A.	SHADING FIXED IN DETAILS.

UTAH DEPARTMENT OF TRANSPORTATION
STANDARD DRAWINGS FOR ROAD AND BRIDGE CONSTRUCTION
SALT LAKE CITY, UTAH

RECOMMENDED FOR APPROVAL — APR.29,2004 DATE

CHAIRMAN STANDARDS COMMITTEE APPROVED — APR.29,2004 DATE

DEPUTY DIRECTOR

STANDARD DRAWING TITLE: TYPICAL PAVEMENT MARKINGS

STD DWG: ST 3

DGN File: N:\Esd\Standard_Drawings\Imperial\2004\Approved\Changed\Approved\st03.dgn

27-MAY-2004

NOTES:

1. THE REGION TRAFFIC ENGINEER DETERMINES THE NUMBER AND LOCATIONS OF CROSSWALKS AT AN INTERSECTION.
2. THE REGION TRAFFIC ENGINEER DETERMINES WHEN TO USE THE "SPECIAL EMPHASIS" CROSSWALK.
3. PLACE THE STOP LINE AT DESIRED STOPPING POINT.
4. USE A WIDER STOP LINE ONLY WHEN APPROVED BY THE REGION TRAFFIC ENGINEER.
5. ESTABLISH A "NO PARKING" ZONE 30' PRIOR TO FLASHING SIGNAL, STOP SIGN, YELD SIGN, OR TRAFFIC CONTROL SIGNAL PLACED ON THE SIDE OF ROADWAY.
6. RED CURB MARKING IS OPTIONAL FOR "NO PARKING" ZONE.

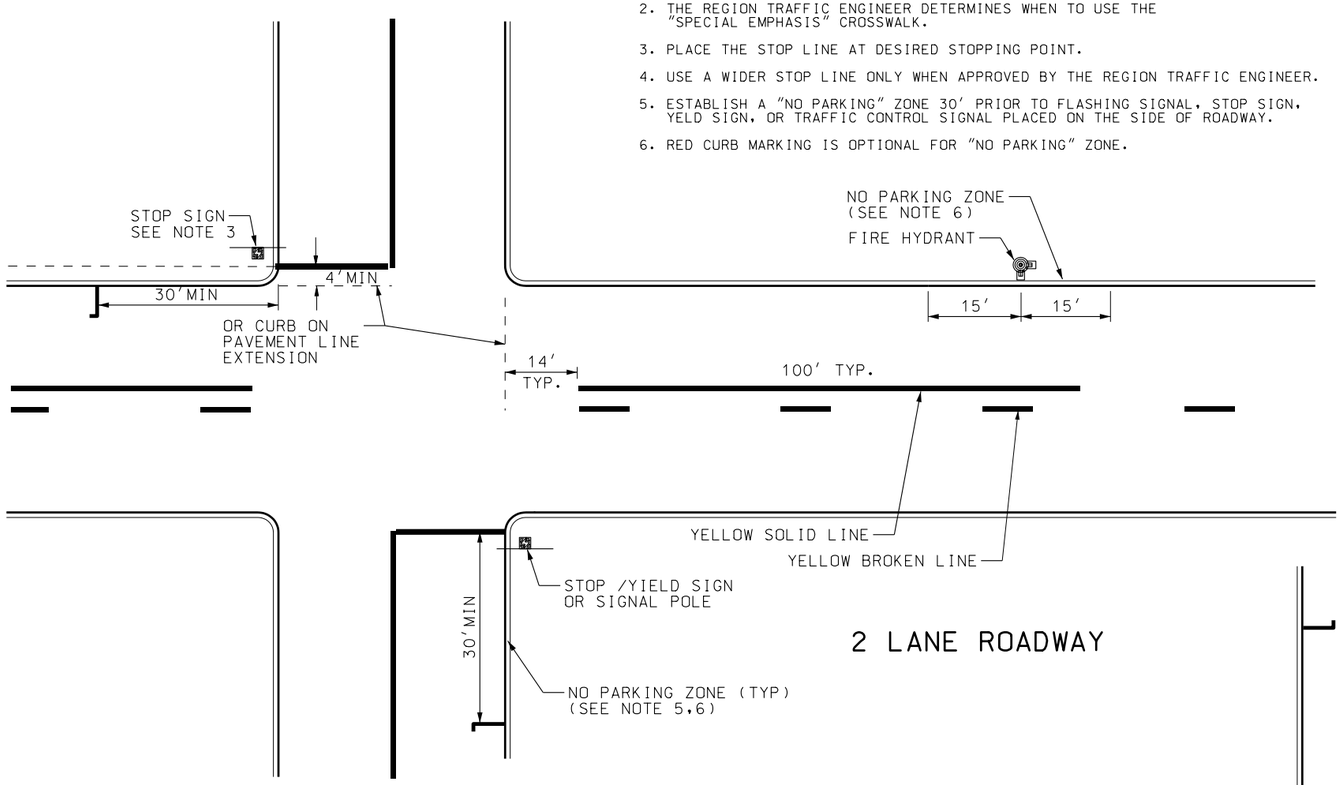

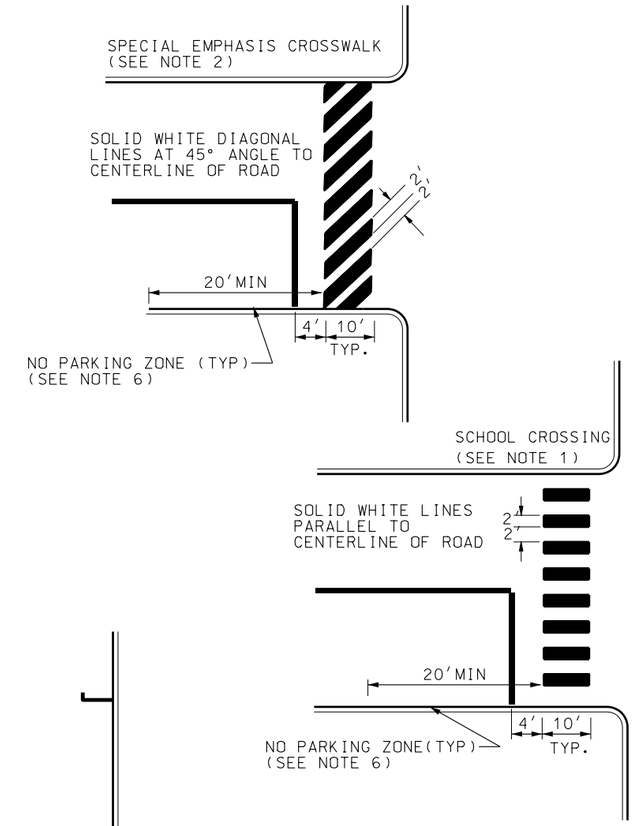

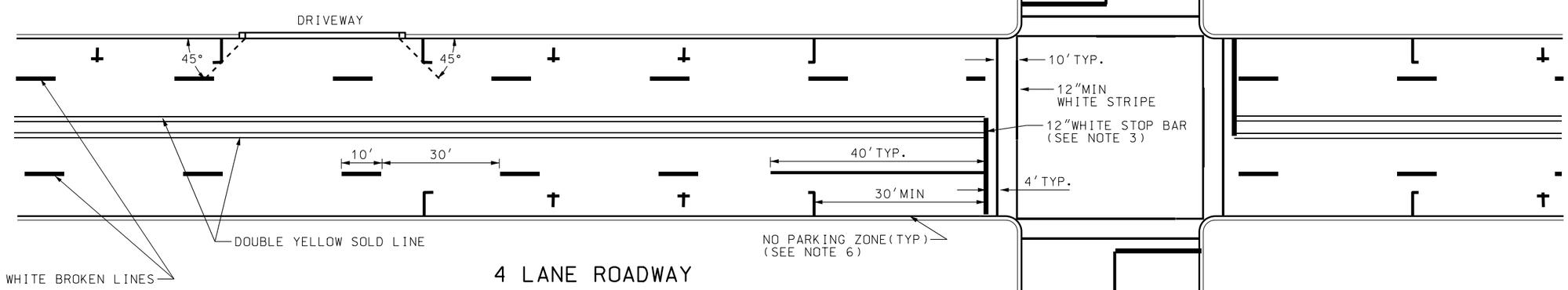

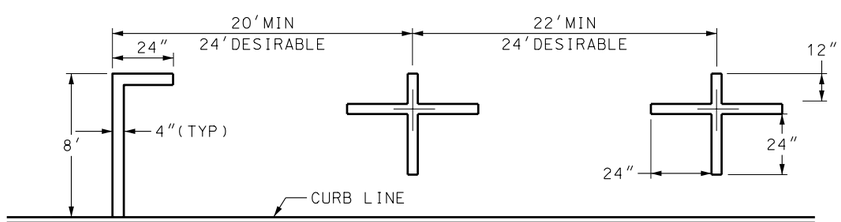

STANDARD PARALLEL PARKING

NO.	DATE	APPR.	REMARKS
1	04/07/04	G.S.	CHANGE SKIP LINE TO BROKEN LINE IN DETAILS TO BE CONSISTENT WITH MUTCD.

REVISIONS

UTAH DEPARTMENT OF TRANSPORTATION
STANDARD DRAWINGS FOR ROAD AND BRIDGE CONSTRUCTION
SALT LAKE CITY, UTAH

RECOMMENDED FOR APPROVAL — APR.29,2004 DATE

CHAIRMAN STANDARDS COMMITTEE APPROVED — APR.29,2004 DATE

DEPUTY DIRECTOR

STANDARD DRAWING TITLE

CROSSWALKS, PARKING AND INTERSECTION APPROACHES

STD DWG
ST 4

DGN File: N:\Esd\Standard Drawings\Imperial\2004\Approved\Changes\Approved\st04.dgn

27-MAY-2004

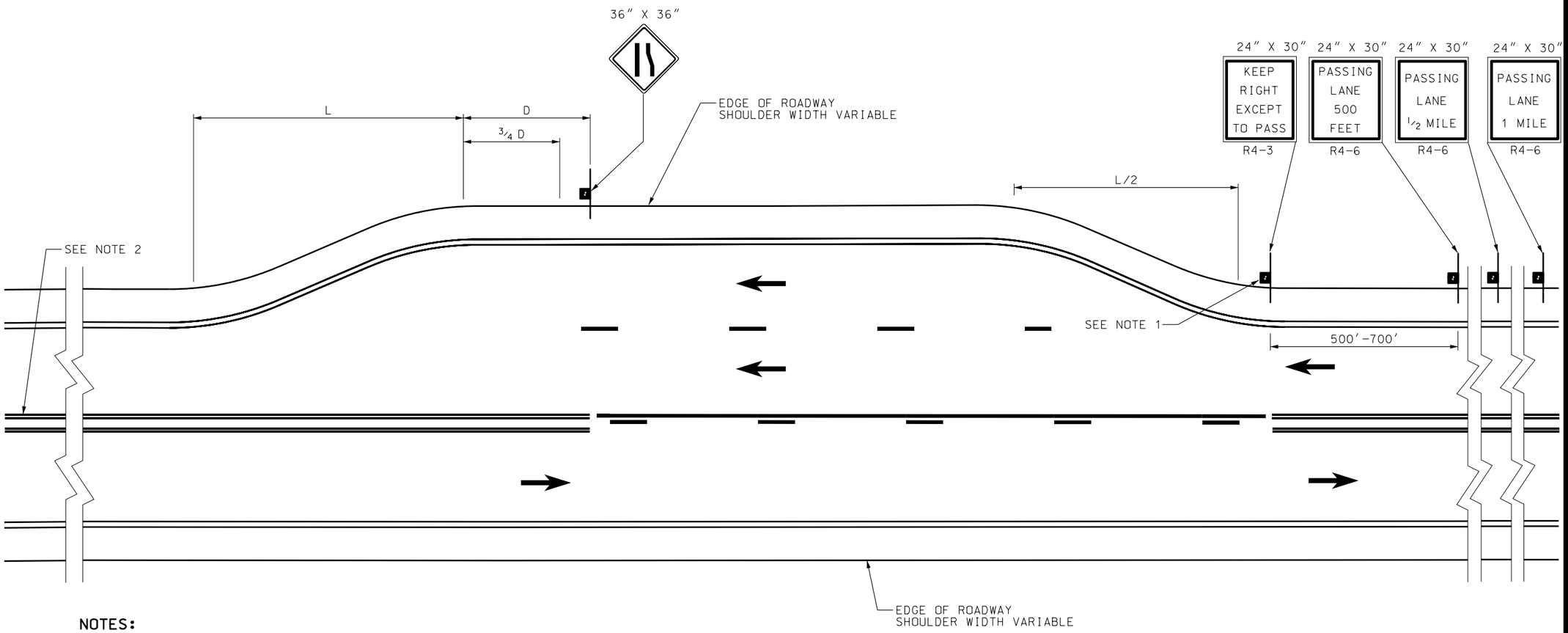

NOTES:

1. REPEAT THE R4-3 SIGN AT 1 MILE INTERVALS WHEN PASSING LANE EXCEEDS 2 MILES IN LENGTH.
2. PERMIT DOWN GRADE PASSING, PROVIDED PASSING ZONE CRITERIA IS MET. PLACE "NO PASSING" MARKINGS THROUGH AND BEYOND THE TRANSITION AREA UNTIL ADEQUATE SIGN DISTANCE IS MET.
3. USE TABLE II FOR DISTANCE "D".
4. USE THE FOLLOWING FORMULAS TO DETERMINE "L":

   L= S x W OR TABLE 1

   FOR SPEEDS LESS THAN 45 MPH

   $L = \frac{WS^2}{60}$ OR TABLE II

   L = LENGTH IN FEET
   S = SPEED LIMIT
   W = OFFSET IN FEET

TABLE I

SPEED MPH	AVERAGE RUNNING SPEED MPH	MIN. TRUCK SPEED MPH	"L" TRANSITION LENGTH (feet)	L/2 TRANSITION LENGTH (feet)
30	28	13	180	90
40	36	21	320	160
45	40	25	540	270
50	44	29	600	300
55	48	30	660	330
60	52	30	720	360
65	55	30	780	390
70	58	30	840	420

TABLE II

MPH	D (feet)
20	175
25	250
30	325
35	400
40	475
45	550
50	625
55	700
60	775
65	850

REVISIONS

NO.	DATE	APPR.	REMARKS
1	04/29/04	BA	SHADING FIXED IN DETAILS.

UTAH DEPARTMENT OF TRANSPORTATION
STANDARD DRAWINGS FOR ROAD AND BRIDGE CONSTRUCTION
SALT LAKE CITY, UTAH

RECOMMENDED FOR APPROVAL — APR.29.2004 DATE

CHAIRMAN STANDARDS COMMITTEE APPROVED — APR.29.2004 DATE

DEPUTY DIRECTOR

STANDARD DRAWING TITLE

PASSING/CLIMBING LANES TRAFFIC CONTROL

STD DWG
ST 6

DGN File: N:\Esa\Standard_Drawings\Imperial\2004\Approved\Change1\Approved\st06.dgn
27-MAY-2004

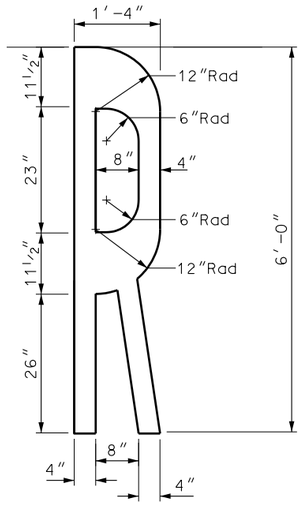

SPACING TABLE

SPEED LIMIT MPH	MIN.DISTANCE (feet)
65 - 70	750
55 - 60	550
45 - 50	375
35 - 40	225
25 - 30	100

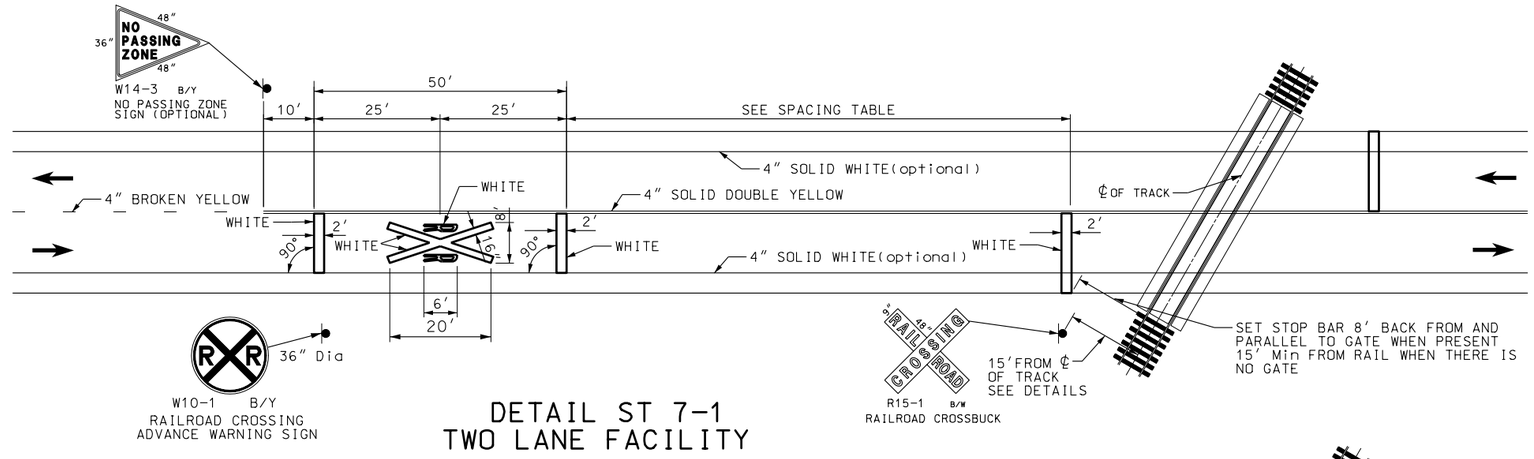

DETAIL ST 7-1
TWO LANE FACILITY

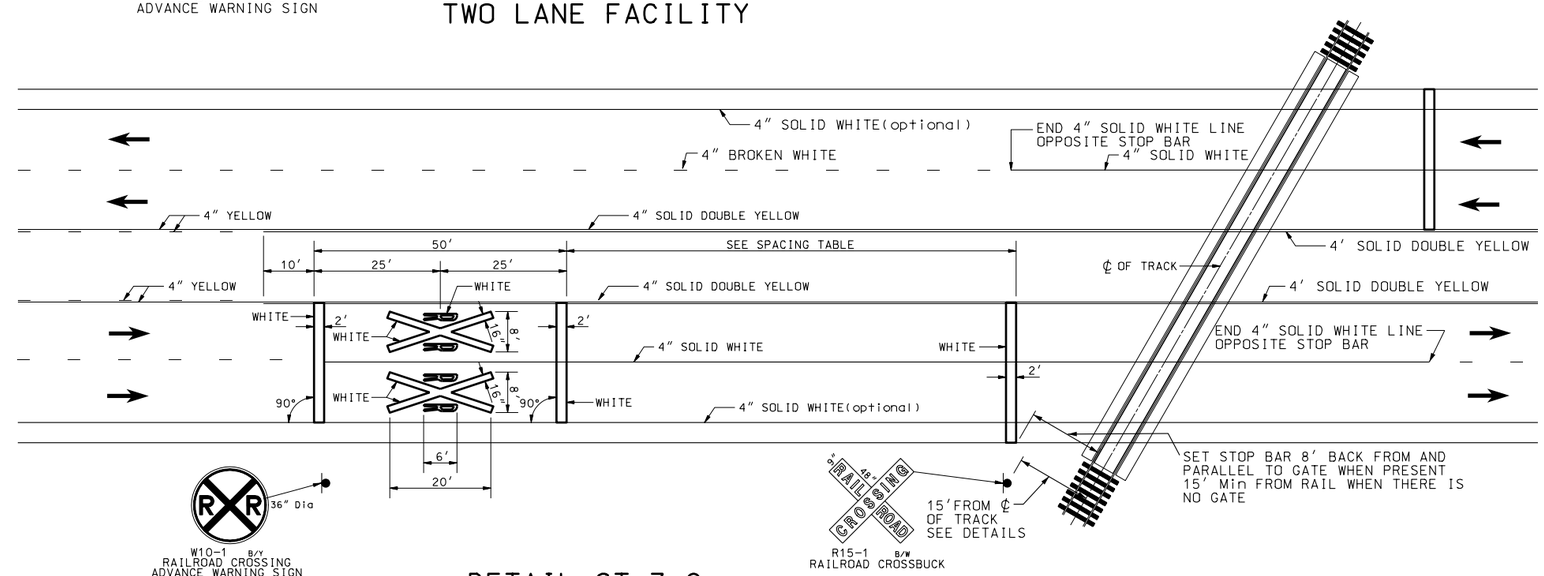

DETAIL ST 7-2
MULTI LANE FACILITY

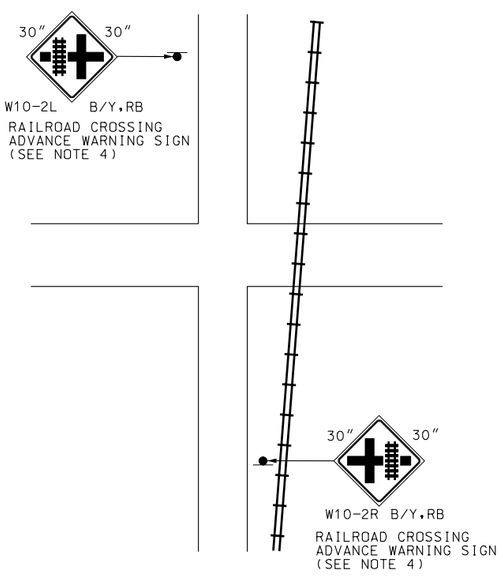

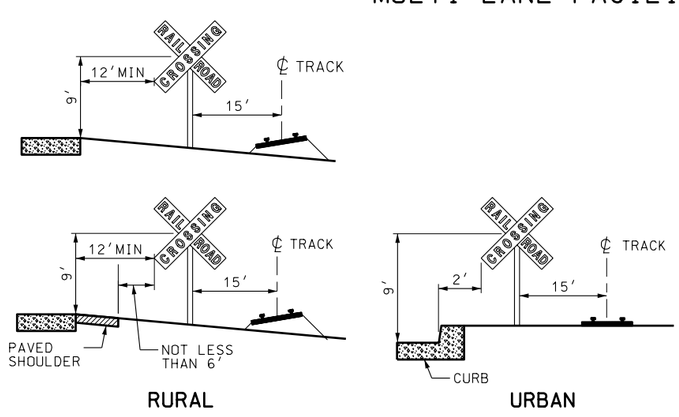

RURAL

URBAN

DETAILS

NOTES:

1. PLACE PAVEMENT MARKINGS, CONSISTING OF AN "RXR", TRANSVERSE LINES, AND NO-PASSING MARKINGS. USE MARKINGS IN EACH APPROACH LANE ON ALL PAVED APPROACHES TO GRADE CROSSING WHERE GRADE CROSSING SIGNALS OR AUTOMATIC GATES ARE PRESENT AND AT ALL OTHER GRADE CROSSINGS WHERE THE SPEED IS 40 MPH OR GREATER. PLACE PAVEMENT MARKINGS AT OTHER CROSSINGS AS DIRECTED BY THE REGION TRAFFIC ENGINEER.
2. EXTEND TRANSVERSE LINES ACROSS ALL APPROACH LANES ON MULTI-LANE ROADS. USE INDIVIDUAL "RXR" MARKINGS IN EACH APPROACH LANE.
3. USE AN ADDITIONAL W10-1 ON CROSS STREET WHEN AN INTERSECTION IS LOCATED BETWEEN THE W10-1 AND THE GRADE CROSSING.
4. USE W10-2 SIGN WHERE THERE IS NOT A W10-1 SIGN BETWEEN THE INTERSECTION AND GRADE CROSSING.
5. USE STANDARD ALPHABET FOR HIGHWAY SIGN AND PAVEMENT MARKINGS FOR DIMENSIONS OF RAILROAD PAVEMENT MARKINGS.

REVISIONS

NO.	DATE	APPR.	REMARKS
1	04/07/04	G.S.	CHANGE SKIP LINE TO BROKEN LINE IN DETAILS TO BE CONSISTENT WITH MUTCD.

UTAH DEPARTMENT OF TRANSPORTATION
STANDARD DRAWINGS FOR ROAD AND BRIDGE CONSTRUCTION
SALT LAKE CITY, UTAH

RECOMMENDED FOR APPROVAL — APR.29,2004 DATE

CHAIRMAN STANDARDS COMMITTEE APPROVED — APR.29,2004 DATE

DEPUTY DIRECTOR

PAVEMENT MARKINGS AND SIGNS AT RAILROAD CROSSING

STANDARD DRAWING TITLE

STD DWG
ST 7

DGN File:N:\Esd\Standard_Drawings\Imperial\2004\Approved\Change\Approved\st07.dgn
27-MAY-2004

NOTES:

1. PLACE A MINIMUM OF 10 PLOWABLE PAVEMENT MARKERS AT 20′ CENTERS IN EACH SIDE OF GORE FROM BEGINNING OF GORE. (MINIMUM TOTAL = 20 MARKERS)
2. CLEAR MARKERS SUPPLEMENT WHITE PAINT LINES. YELLOW MARKERS SUPPLEMENT YELLOW PAINT LINES.
3. THE REGION TRAFFIC ENGINEER WILL APPROVE ALL OTHER LOCATIONS.

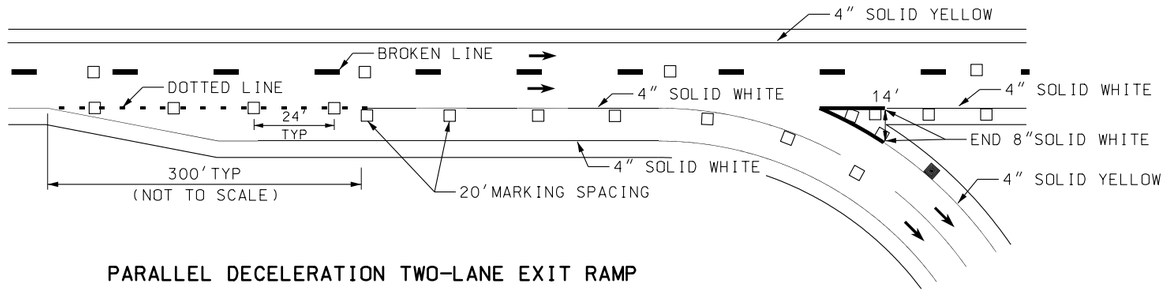

PARALLEL DECELERATION TWO-LANE EXIT RAMP

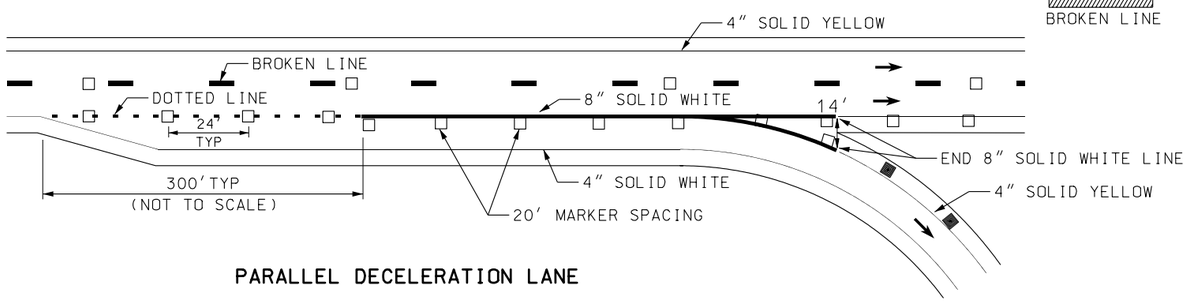

PARALLEL DECELERATION LANE

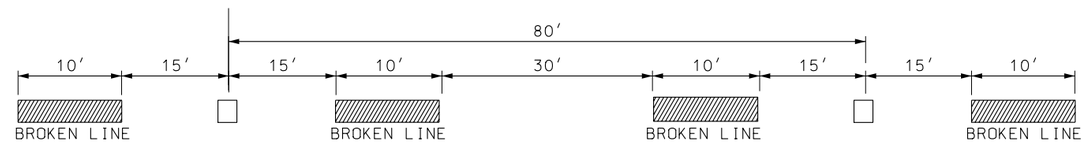

80′ MARKER SPACING BETWEEEN BROKEN LINES
ON TANGENT AND FOR R ℄ 1900′

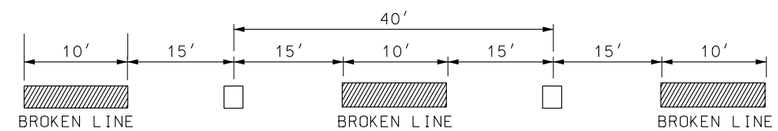

40′ MARKER SPACING BETWEEEN BROKEN LINES
FOR 1900′ ℄ R ℄ 400′

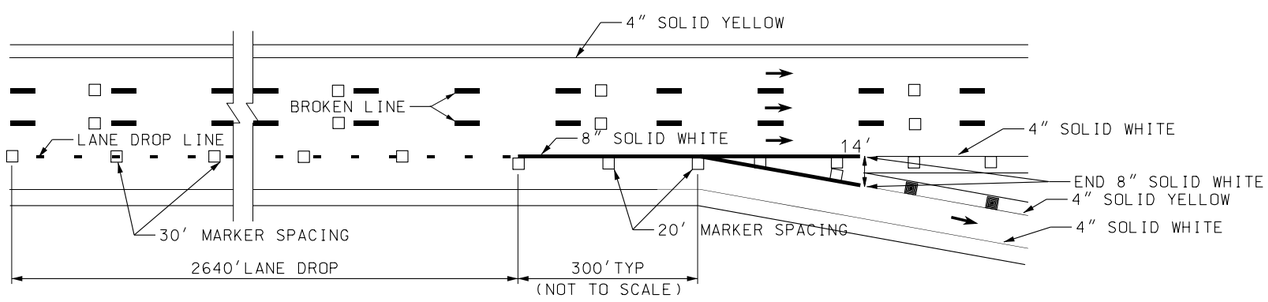

LANE DROP EXIT RAMP

FOR R <400′
20′ MARKER SPACING BETWEEEN BROKEN LINES

DETAIL "A"

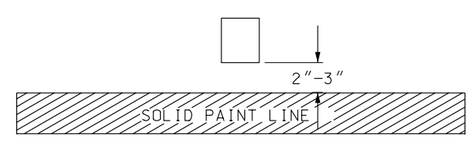

DETAIL "B"

MARKER SUPPLEMENTING SOLID PAINT LINE

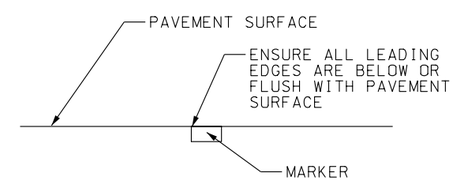

DETAIL "C"

MARKER IN PAVEMENT SURFACE

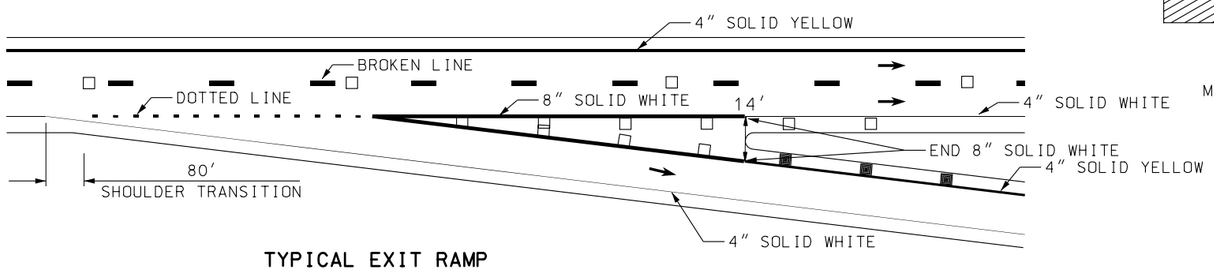

TYPICAL EXIT RAMP

LEGEND

□ = CLEAR ONE WAY MARKER
■ = YELLOW ONE WAY MARKER
R = RADIUS OF CURVE

REVISIONS

NO.	DATE	APPR.	REMARKS
1	04/07/04	G.S.	CHANGE SKIP LINE TO BROKEN LINE IN DETAILS TO BE CONSISTENT WITH MUTCD.

UTAH DEPARTMENT OF TRANSPORTATION
STANDARD DRAWINGS FOR ROAD AND BRIDGE CONSTRUCTION
SALT LAKE CITY, UTAH

RECOMMENDED FOR APPROVAL — APR.29,2004 DATE
CHAIRMAN STANDARDS COMMITTEE APPROVED — APR.29,2004 DATE
DEPUTY DIRECTOR

PLOWABLE PAVEMENT MARKERS
STANDARD DRAWING TITLE

STD DWG
ST 8

DGN File:N:\Esd\Standard Drawings\Imperial\2004\Approved\Changes\Approved\st08.dgn
27-MAY-2004