2002 STANDARD DRAWINGS

http://www.udot.utah.gov/esd/esdmenu3.htm

July 3, 2002

NUMBER	TITLE	CURRENT DATE
	Advanced Traffic Management System (AT)	
AT 1	Legend Sheet	07/03/02
AT 2	Ramp Meter Details	07/03/02
AT 3	Ramp Meter Sign Panel	07/03/02
AT 4	Typical Ramp Meter Signal Head Mounting	07/03/02
AT 5	Loop Installation	07/03/02
AT 6	Conduit Details	07/03/02
AT 7	Polymer-Concrete Junction Box Details	07/03/02
AT 8	ATMS Cabinet w/120V Disconnect	07/03/02
AT 9	ATMS Cab With Stepdown Transformer	07/03/02
AT 10	Domed CCTV Details	07/03/02
AT 11	CCTV Pole Detail	07/03/02
AT 12	CCTV Pole Foundation For Dedicated CCTV Pole	07/03/02
AT 13	120V VMS Cab Foundation Details	07/03/02
AT 14	Weigh In Motion Piezo Detail	07/03/02
	Barriers (BA)	
BA 1A	Precast Concrete Full Barrier Standard Section	07/03/02
BA 1B	Precast Concrete Full Barrier Standard Section	07/03/02
BA 2	Precast Concrete Half Barrier Standard Section	07/03/02
BA 3	Cast In Place Constant Slope Barrier	07/03/02
BA 4	Beam Guardrail Hardware	07/03/02

NUMBER	TITLE	CURRENT DATE
BA 4A	Guardrail Transition	07/03/02
BA 4B	Beam Guardrail Installation	07/03/02
BA 5	Traffic Control Cable	07/03/02
	Catch Basins and Cleanouts (CB)	
CB 1	Standard Catch Basin	07/03/02
CB 2	Curb Inlet Catch Basin	07/03/02
CB 3	Standard Transition Concrete Lined Ditch To Pipe Or Diversion Box	07/03/02
CB 4	Solid Cover For Standard Drawing DB 1 MS-18 Loading	07/03/02
CB 5	Standard Screw Gate And Frame	07/03/02
CB 6A	Standard Drop Inlet Details General Notes And Installation Detail	07/03/02
CB 6B	Standard Catch Basin And Cleanout Box Drop Inlet Type "A" Details	07/03/02
CB 6C	Standard Catch Basin And Cleanout Box Drop Inlet Type "B" Details	07/03/02
CB 6D	Standard Catch Basin And Cleanout Box Drop Inlet Type "C" Details	07/03/02
CB 6E	Standard Catch Basin And Cleanout Box Drop Inlet With Attached Apron Details	07/03/02
CB 6F	Standard Catch Basin And Cleanout Box Drop Inlet With Attached Apron Details	07/03/02
CB 6G	Standard Catch Basin And Cleanout Box Drop Inlet Type "D" Details	07/03/02
CB 6H	Standard Catch Basin And Cleanout Box Drop Inlet Type "D" Tables	07/03/02

NUMBER	TITLE	CURRENT DATE
CB 7	Standard Curb And Gutter Drop Inlet	07/03/02
CB 8A	Double Catch Basin	07/03/02
CB 8B	Double Catch Basin	07/03/02
CB 9A	Standard Catch Basin and Cleanout Box Situation & Layout	07/03/02
CB 9B	Standard Catch Basin and Cleanout Box Section Details	07/03/02
CB 9C	Standard Catch Basin and Cleanout Box Schedule Of Installation 18" to 42" RCP 12" to 48" CMP	07/03/02
CB 9D	Standard Catch Basin and Cleanout Box Schedule Of Installation 48" to 66" RCP 60" to 78" CMP	07/03/02
CB 10A	Standard Catch Basin and Cleanout Box Situation & Layout	07/03/02
CB 10B	Standard Catch Basin and Cleanout Box Section Details	07/03/02
CB 10C	Standard Catch Basin and Cleanout Box Schedule Of Installation 42" to 60" RCP 48" to 72" CMP	07/03/02
	Crash Cushions (CC)	
CC 1	Crash Cushion Markings	07/03/02
CC 2	Crash Cushion Drainage Details Guideline A	07/03/02
CC 3	Crash Cushion Drainage Details Guideline B	07/03/02
CC 4	Details For Placement Crash Cushions Type A, B, & D	07/03/02
CC 5	Grading And Placement Detail Crash Cushion Type C	07/03/02
CC 6	Crash Cushion Type E Sand Barrel Details	07/03/02
CC 7	Grading & Installation Details Crash Cushion Type F, Type G	07/03/02

NUMBER	TITLE	CURRENT DATE
CC 8	Grading & Installation Detail Crash Cushion Type H	07/03/02
	Diversion Boxes (DB)	
DB 1A	Standard Diversion Box/Cover Plate/Grating For 18" DIA. or 24" DIA. Pipe	07/03/02
DB 1B	Standard Diversion Box Hinged Lid Details For 18" DIA. or 24" DIA. Pipe	07/03/02
DB 1C	Standard Diversion Box Bicycle - Safe Grating Details For 18" DIA. or 24" DIA. Pipe	07/03/02
DB 1D	Standard Diversion Box Three Gate Box Sections For 18" DIA. or 24" DIA. Pipe	07/03/02
DB 1E	Standard Diversion Box Three Gate Box Sections For 18" DIA. or 24" DIA. Pipe	07/03/02
DB 1F	Standard Diversion Box Three Gate Box Sections For 18" DIA. or 24" DIA. Pipe	07/03/02
DB 2A	Standard Diversion Box w/Interchangeable Walls, Bottom Slab, Walls and Apron Detail	07/03/02
DB 2B	Standard Diversion Box w/Interchangeable Walls, Quantities Schedule	07/03/02
DB 2C	Standard Diversion Box w/Interchangeable Walls, Hand Slide Gate Details	07/03/02
DB 2D	Standard Diversion Box Type "G" Hand Slide Details	07/03/02
DB 2E	Standard Diversion Box Hinged Lid (Solid Cover Plate) Type "A" Details Type I Plan	07/03/02
DB 2F	Standard Diversion Box Hinged Lid (Solid Cover Plate) Type "A" Details Type II Plan	07/03/02
DB 2G	Standard Diversion Box Hinged Lid Solid Cover Type "B" Details	07/03/02
DB 2H	Standard Diversion Box Hinged Lid Solid Cover Type "B" & "C" Details	07/03/02

NUMBER	TITLE	CURRENT DATE
DB 3A	Standard Diversion Box With Manhole Cover Situation And Layout	07/03/02
DB 3B	Standard Diversion Box With Manhole Cover Up To 42" RCP and Up To 54" CMP	07/03/02
DB 3C	Standard Diversion Box With Manhole Cover 48" - 72" RCP and 60" to 84" CMP	07/03/02
	Drainage (DG)	
DG 1	Fill Height for Metal Pipe (Steel)	07/03/02
DG 2	Fill Height for Metal Pipe (Aluminum)	07/03/02
DG 3	Maximum Fill Height and End Sections For HDPE and PVC Pipes	07/03/02
DG 4	Pipe Culverts Minimum Cover	07/03/02
DG 5	Plastic Pipe, Metal Pipe or Pipe Arch Culvert Bedding	07/03/02
DG 6	Precast Concrete Pipe Culvert	07/03/02
DG 7	Gasketted Joints or Coupling Bands for C.M.P.	07/03/02
DG 8	Metal Culvert End Sections	07/03/02
DG 9	Miscellaneous Pipe Details	07/03/02
	Environmental Controls (EN)	
EN 1	Temporary Erosion Control (Check Dams)	07/03/02
EN 2	Temporary Erosion Control (Silt Fence)	07/03/02
EN 3	Temporary Erosion Control (Slope Drain and Temporary Berm)	07/03/02
EN 4	Temporary Erosion Control (Drop Inlet Barriers)	07/03/02
EN 5	Temporary Erosion Control (Sediment Basin)	07/03/02

NUMBER	TITLE	CURRENT DATE
	Fence and Gates (FG)	
FG 1A	Right-of-Way Fence and Gates (Wood Posts)	07/03/02
FG 1B	Right-of-Way Fence and Gates (Wood Posts)	07/03/02
FG 2A	Right-of-Way Fence and Gates (Metal Posts)	07/03/02
FG 2B	Right-of-Way Fence and Gates (Metal Posts)	07/03/02
FG 3	Swing Gates Type I for Gates Less Than 17'	07/03/02
FG 4	Deer Gates	07/03/02
FG 5	Swing Gates Type II for Gates Wider Than 17'	07/03/02
FG 6	Chain Link Fence	07/03/02
	Grates, Frames, and Trash Racks (GF)	
GF 1	Manhole Frame And Grated Cover	07/03/02
GF 2	Manhole Frame And Solid Cover	07/03/02
GF 3	Rectangle Grate & Frame	07/03/02
GF 4	Directional Flow Grate & Frame	07/03/02
GF 5	Solid Cover & Frame	07/03/02
GF 6	Manhole Steps	07/03/02
GF 7	Standard Screw Grate & Frame	07/03/02
GF 8	2' x 2' Grate & Frame	07/03/02
GF 9	28" x 24" Directional Flow and Frame	07/03/02
GF 10	Standard Trash Racks 90E X-ing L	07/03/02
GF 11	Standard Trash Racks	07/03/02
GF 12	Standard Trash Racks	07/03/02

NUMBER	TITLE	CURRENT DATE
	General Road Work (GW)	
GW 1	Raised Median and Plowable End Section	07/03/02
GW 2	Concrete Curb and Gutter	07/03/02
GW 3	Concrete Curb and Gutter Details	07/03/02
GW 4	Concrete Driveways and Sidewalks	07/03/02
GW 5	Pedestrian Access	07/03/02
GW 6	Right-of-Way Marker	07/03/02
GW 7	Newspaper and Mailbox Stop Layout	07/03/02
GW 8	Newspaper and Mailbox Support Hardware	07/03/02
GW 9	Delineation Hardware	07/03/02
GW 10	Delineation Application	07/03/02
	Paving (PV)	
PV 1	Joints for Highways with Concrete Traffic Lanes and Shoulders	07/03/02
PV 2	Pavement/Approach Slab Details	07/03/02
PV 3	Concrete Pavement Details for Urban and Interstate	07/03/02
PV 4	Concrete Pavement Details for Urban and Interstate	07/03/02
PV 5	Urban Concrete Pavement Details	07/03/02
PV 6	Rumble Strips	07/03/02
PV 7	Rumble Strips - Typical Application	07/03/02

NUMBER	TITLE	CURRENT DATE
	Signals (SL)	
SL 1	Traffic Signals Mast Arm Pole and Luminaire Extension	07/03/02
SL 2	Traffic Signals Mast Arm Detail 25' Thru 65'	07/03/02
SL 3	Underground Service Pedestal Details	07/03/02
SL 4	Traffic Signals Mast Arm Pole Foundation	07/03/02
SL 5	Breakaway Post Mounted Traffic Signal Pole	07/03/02
SL 6	Power Source Details	07/03/02
SL 7	Span Wire Signal Pole Detail	07/03/02
SL 8	Signal Head Details	07/03/02
SL 9	Pedestrian Signal Assembly	07/03/02
SL 10	Controller Base Details	07/03/02
SL 11	Traffic Signals Loop Detector Detail	07/03/02
SL 12	Junction Box Details	07/03/02
SL 13	Traffic Counting Loop Detector Detail	07/03/02
SL 14	Light Pole Breakaway Base	07/03/02
SL 15	Luminaire Breakaway Base Detail	07/03/02
SL 16	Single Transformer Substation Details	07/03/02
SL 17	Light Pole Anchor Base	07/03/02
SL 18	Light Pole Foundation Extension	07/03/02
	Signs (SN)	
SN 1	Bridge Load Limit Signs	07/03/02
SN 2	Flashing School Sign	07/03/02

NUMBER	TITLE	CURRENT DATE
SN 3	Overhead School Flasher	07/03/02
SN 4	Flashing Stop Sign	07/03/02
SN 5	Typical Installation for Milepost Signs	07/03/02
SN 6	Not Used	
SN 7	Placement of Ground Mounted Signs	07/03/02
SN 8	Ground Mounted Timber Sign Post (P1)	07/03/02
SN 9	Ground Mounted Tubular Steel Sign Post (P2)	07/03/02
SN 10	Ground Mounted Square Steel Sign Post (P3)	07/03/02
SN 11	Slipbase Ground Mounted Tubular Steel Sign Post (P4)	07/03/02
SN 12A	Ground Mounted Sign Installation Details	07/03/02
SN 12B	Ground Mounted Sign Installation Details	07/03/02
SN 12C	Ground Mounted Sign Installation Details	07/03/02
	Striping (ST)	
ST 1	Object Markers "T" Intersection & Pavement Transition Guidance	07/03/02
ST 2	Freeway Turn Around Markings	07/03/02
ST 3	Typical Pavement Markings	07/03/02
ST 4	Crosswalks, Parking and Intersection Approaches	07/03/02
ST 5	Painted Median & Auxiliary Lane Details	07/03/02
ST 6	Passing/Climbing Lanes Traffic Control	07/03/02
ST 7	Pavement Markings & Signs at Railroad Crossing	07/03/02
ST 8	Plowable Pavement Markers	07/03/02

NUMBER	TITLE	CURRENT DATE
	Structures and Walls (SW)	
SW 1A	Welded End Guard Unit	07/03/02
SW 1B	Precast Concrete Cattle Guard	07/03/02
SW 2	Noise Wall Placement Area	07/03/02
SW 3A	Precast Concrete Noise Wall 1 of 2	07/03/02
SW 3B	Precast Concrete Noise Wall 2 of 2	07/03/02
SW 4A	Precast Concrete Retaining/Noise Wall 1 of 2	07/03/02
SW 4B	Precast Concrete Retaining/Noise Wall 2 of 2	07/03/02
	Traffic Control (TC)	
TC 1A	Construction Zone Channelization Devices	07/03/02
TC 1B	Construction Zone Signing	07/03/02
TC 2A	Traffic Control General	07/03/02
TC 2B	Traffic Control General	07/03/02
TC 3	Traffic Control Project Limit Signing	07/03/02
TC 4	Traffic Control Urban Intersections With Roadways Under 50 MPH	07/03/02
TC 5	Traffic Control Urban Intersections With Roadways Under 50 MPH	07/03/02
TC 6	Traffic Control Pedestrian Routing	07/03/02
TC 7	Traffic Control Road Closed, Detour	07/03/02
TC 8	Traffic Control Lane Closure	07/03/02
TC 9	Traffic Control Multilane Closure	07/03/02

NUMBER	TITLE	CURRENT DATE
TC 10	Traffic Control Expressway And Freeway Crossover/Turn-Around	07/03/02
TC 11	Traffic Control Exit Ramp Gore	07/03/02
TC 12	Traffic Control Entrance Ramp Gore	07/03/02
TC 13	Traffic Control Shoulder-Haul Road	07/03/02
TC 14	Traffic Control Flagging Operation	07/03/02
TC 15	Traffic Control 2 Lane/ 2 Way Seal Coat With Cover Material	07/03/02
TC 16	Traffic Control Pavement Marking	07/03/02

UTAH DEPARTMENT OF TRANSPORTATION

STANDARD DRAWINGS FOR ROAD AND BRIDGE CONSTRUCTION

DWG. NO.	DESCRIPTION	DATE
	Advanced Traffic Management System (AT)	
AT 1	LEGEND SHEET	07-03-02
AT 2	RAMP METER DETAILS	07-03-02
AT 3	RAMP METER SIGN PANEL	07-03-02
AT 4	TYPICAL RAMP METER SIGNAL HEAD MOUNTING	07-03-02
AT 5	LOOP INSTALLATION	07-03-02
AT 6	CONDUIT DETAILS	07-03-02
AT 7	POLYMER-CONCRETE JUNCTION BOX DETAILS	12-19-02
AT 8	ATMS CABINET W/120V DISCONNECT	07-03-02
AT 9	ATMS CAB WITH STEPDOWN TRANSFORMER	07-03-02
AT 10	DOMED CCTV DETAILS	07-03-02
AT 11	CCTV POLE DETAIL	07-03-02
AT 12	CCTV POLE FOUNDATION FOR DEDICATED CCTV POLE	07-03-02
AT 13	120V VMS CAB FOUNDATION DETAILS	07-03-02
AT 14	WEIGHT IN MOTION PIEZO DETAIL	07-03-02
	Barriers (BA)	
BA 1A	PRECAST CONCRETE FULL BARRIER STANDARD SECTION	12-19-02
BA 1B	PRECAST CONCRETE FULL BARRIER STANDARD SECTION	12-19-02
BA 2	PRECAST CONCRETE HALF BARRIER STANDARD SECTION	07-03-02
BA 3	CAST IN PLACE CONSTANT SLOPE BARRIER	12-19-02
BA 4	BEAM GUARDRAIL HARDWARE	07-03-02
BA 4A	GUARDRAIL TRANSITION	07-03-02
BA 4B	BEAM GUARDRAIL INSTALLATIONS	12-19-02
BA 4C	BEAM GUARDRAIL ANCHOR TYPE 1	12-19-02
BA 5	TRAFFIC CONTROL CABLE	07-03-02
	Catch Basins and Cleanouts (CB)	
CB 1	STANDARD CATCH BASIN	07-03-02
CB 2	CURB INLET CATCH BASIN	07-03-02
CB 3	STANDARD TRANSITION CONCRETE LINED DITCH TO PIPE OR DIVERSION BOX	07-03-02
CB 4	SOLID COVER FOR STD DWG DB 1 MS-18 LOADING	07-03-02
CB 5	STANDARD SCREW GATE AND FRAME	07-03-02
CB 6A	STANDARD DROP INLET DETAILS GENERAL NOTES AND INSTALLATION DETAIL	07-03-02
CB 6B	STANDARD CATCH BASIN AND CLEANOUT BOX DROP INLET TYPE "A" DETAIL	07-03-02
CB 6C	STANDARD CATCH BASIN AND CLEANOUT BOX DROP INLET TYPE "B" DETAILS	07-03-02
CB 6D	STANDARD CATCH BASIN AND CLEANOUT BOX DROP INLET TYPE "C" DETAILS	07-03-02
CB 6E	STANDARD CATCH BASIN AND CLEANOUT BOX DROP INLET WITH ATTACHED APRON DETAILS	07-03-02
CB 6F	STANDARD CATCH BASIN AND CLEANOUT BOX DROP INLET WITH ATTACHED APRON DETAILS	07-03-02
CB 6G	STANDARD CATCH BASIN AND CLEANOUT BOX DROP INLET TYPE "D" DETAILS	07-03-02
CB 6H	STANDARD CATCH BASIN AND CLEANOUT BOX DROP INLET TYPE "D" TABLES	07-03-02
CB 7	STANDARD CURB AND GUTTER DROP INLET	07-03-02
CB 8A	DOUBLE CATCH BASIN	07-03-02
CB 8B	DOUBLE CATCH BASIN	07-03-02

DWG. NO.	DESCRIPTION	DATE
CB 9A	STANDARD CATCH BASIN AND CLEANOUT BOX SITUATION & LAYOUT	07-03-02
CB 9B	STANDARD CATCH BASIN AND CLEANOUT BOX SECTION DETAILS	07-03-02
CB 9C	STANDARD CATCH BASIN AND CLEANOUT BOX SCHEDULE OF INSTALLATION 18" TO 42" RCP 12" TO 48" CMP	07-03-02
CB 9D	STANDARD CATCH BASIN AND CLEANOUT BOX SCHEDULE OF INSTALLATION 48" TO 66" RCP 60" TO 78"CPM	07-03-02
CB 10A	STANDARD CATCH BASIN AND CLEANOUT BOX SITUATION & LAYOUT	07-03-02
CB 10B	STANDARD CATCH BASIN AND CLEANOUT BOX SECTION DETAILS	07-03-02
CB 10C	STANDARD CATCH BASIN AND CLEANOUT BOX SCHEDULE OF INSTALLATION 42" TO 60" RCP 48" TO 72" CMP	07-03-02
	Crash Cushions (CC)	
CC 1	CRASH CUSHION MARKINGS	07-03-02
CC 2	CRASH CUSHION DRAINAGE DETAILS GUIDELINE A	07-03-02
CC 3	CRASH CUSHION DRAINAGE DETAILS GUIDELINE B	07-03-02
CC 4	DETAIL FOR PLACEMENT CRASH CUSHIONS TYPE A, B & D	07-03-02
CC 5	GRADING & PLACEMENT DETAIL CRASH CUSHION TYPE C	07-03-02
CC 6	CRASH CUSHION TYPE E SAND BARREL DETAILS	12-19-02
CC 7	GRADING & INSTALLATION DETAILS CRASH CUSHIONS TYPE F, TYPE G	07-03-02
CC 8	GRADING & INSTALLATION DETAIL CRASH CUSHION TYPE H	07-03-02
	Diversion Boxes (DB)	
DB 1A	STANDARD DIVERSION BOX/COVER PLATE/GRATING FOR 18"DIA. OR 24"DIA.PIPE	07-03-02
DB 1B	STANDARD DIVERSION BOX HINGED LID DETAIL FOR 18" DIA OR 24" DIA.PIPE	07-03-02
DB 1C	STANDARD DIVERSION BOX BICYCLE-SAFE GRATING DETAILS FOR 18"DIA. OR 24"DIA.PIPE	07-03-02
DB 1D	STANDARD DIVERSION BOX THREE GATE BOX SECTIONS FOR 18"DIA. OR 24"DIA.PIPE	07-03-02
DB 1E	STANDARD DIVERSION BOX THREE GATE BOX SECTIONS FOR 18"DIA. OR 24"DIA.PIPE	07-03-02
DB 1F	STANDARD DIVERSION BOX THREE GATE BOX SECTIONS FOR 18"DIA. OR 24"DIA.PIPE	07-03-02
DB 2A	STANDARD DIVERSION BOX W/INTERCHANGEABLE WALLS, BOTTOM SLAB, WALLS AND APRON DETAIL	07-03-02
DB 2B	STANDARD DIVERSION BOX W/INTERCHANGEABLE WALLS, QUANTITIES SCHEDULE	07-03-02
DB 2C	STANDARD DIVERSION BOX W/INTERCHANGEABLE WALLS, HAND SLIDE GATE DETAILS	07-03-02
DB 2D	STANDARD DIVERSION BOX TYPE "G" HAND SLIDE GATE DETAILS	07-03-02
DB 2E	STANDARD DIVERSION BOX HINGED LID (SOLID COVER PLATE) TYPE "A" DETAILS TYPE I PLAN	07-03-02
DB 2F	STANDARD DIVERSION BOX HINGED LID (SOLID COVER PLATE) TYPE "A" DETAILS TYPE II PLAN	07-03-02
DB 2G	STANDARD DIVERSION BOX HINGED LID SOLID COVER TYPE "B"DETAILS	07-03-02
DB 2H	STANDARD DIVERSION BOX HINGED LID SOLID COVER TYPE "B" & "C"DETAILS	07-03-02
DB 3A	STANDARD DIVERSION BOX WITH MANHOLE COVER SITUATION & LAYOUT	07-03-02
DB 3B	STANDARD DIVERSION BOX WITH MANHOLE COVER UP TO 42" RCP AND UP TO 54" CMP	07-03-02
DB 3C	STANDARD DIVERSION BOX WITH MANHOLE COVER 48"TO 72" RCP AND 60"TO 84" CMP	07-03-02

DWG. NO.	DESCRIPTION	DATE
	Drainage (DG)	
DG 1	FILL HEIGHT FOR METAL PIPE (STEEL)	07-03-02
DG 2	FILL HEIGHT FOR METAL PIPE (ALUMINUM)	07-03-02
DG 3	MAXIMUM FILL HEIGHT AND END SECTIONS FOR HDPE AND PVC PIPES	12-19-02
DG 4	PIPE CULVERTS MINIMUM COVER	12-19-02
DG 5	PLASTIC PIPE, METAL PIPE OR PIPE ARCH CULVERT BEDDING	07-03-02
DG 6	PRECAST CONCRETE PIPE CULVERT	07-03-02
DG 7	GASKETTED JOINTS OR COUPLINGS BANDS FOR C.M.P.	07-03-02
DG 8	METAL CULVERT END SECTION	07-03-02
DG 9	MISCELLANEOUS PIPE DETAILS	07-03-02
	Environmental Controls (EN)	
EN 1	TEMPORARY EROSION CONTROL (CHECK DAMS)	07-03-02
EN 2	TEMPORARY EROSION CONTROL (SILT FENCE)	07-03-02
EN 3	TEMPORARY EROSION CONTROL (SLOPE DRAIN AND TEMPORARY BERM)	07-03-02
EN 4	TEMPORARY EROSION CONTROL (DROP INLET BARRIERS)	12-19-02
EN 5	TEMPORARY EROSION CONTROL (SEDIMENT TRAP AND CURB INLET BARRIER)	07-03-02
	Fence and Gates (FG)	
FG 1A	RIGHT OF WAY FENCE AND GATES (WOOD POST)	07-03-02
FG 1B	RIGHT OF WAY FENCE AND GATES (WOOD POST)	07-03-02
FG 2A	RIGHT OF WAY FENCE AND GATES (METAL POST)	07-03-02
FG 2B	RIGHT OF WAY FENCE AND GATES (METAL POST)	07-03-02
FG 3	SWING GATES TYPE 1 FOR GATES LESS THAN 17'	07-03-02
FG 4	DEER GATES	07-03-02
FG 5	SWING GATES TYPE II FOR GATES WIDER THAN 17'	07-03-02
FG 6	CHAIN LINK FENCE	07-03-02

☒ MARKED BOXES INDICATE DRAWINGS APPLICABLE TO THIS PROJECT

REVISIONS

NO.	DATE	APPR.	REMARKS
1	02/19/03	B.A.	CHANGE 1

UTAH DEPARTMENT OF TRANSPORTATION
STANDARD DRAWINGS FOR ROAD AND BRIDGE CONSTRUCTION
SALT LAKE CITY, UTAH

REVIEWED AND CHECKED — FEB.19,2003 DATE

CHECKED AND APPROVAL — FEB.19,2003 DATE

STANDARD ENGINEER

STANDARD DRAWING INDEX SHEET

STANDARD DRAWING TITLE

STD DWG
1-B

UTAH DEPARTMENT OF TRANSPORTATION

STANDARD DRAWINGS FOR ROAD AND BRIDGE CONSTRUCTION

DWG. NO.	DESCRIPTION	DATE
	Grates, Frames and Trash Racks (GF)	
GF 1	MANHOLE FRAME AND GRATED COVER	07-03-02
GF 2	MANHOLE FRAME AND SOLID COVER	07-03-02
GF 3	RECTANGULAR GRATE & FRAME	07-03-02
GF 4	DIRECTIONAL FLOW GRATE & FRAME	07-03-02
GF 5	SOLID COVER & FRAME	07-03-02
GF 6	MANHOLE STEPS	07-03-02
GF 7	STANDARD SCREW GATE & FRAME	07-03-02
GF 8	2' x 2' GATE AND FRAME	07-03-02
GF 9	28" x 24" DIRECTIONAL FLOW GRATE AND FRAME	07-03-02
GF 10	STANDARD TRASH RACKS 90° ANGLE X-ING L	07-03-02
GF 11	STANDARD TRASH RACKS	07-03-02
GF 12	STANDARD TRASH RACKS	07-03-02
	General Road Work (GW)	
GW 1	RAISED MEDIAN AND PLOWABLE END SECTION	12-19-02
GW 2	CONCRETE CURB AND GUTTER	07-03-02
GW 3	CONCRETE CURB AND GUTTER DETAILS	07-03-02
GW 4	CONCRETE DRIVEWAYS AND SIDEWALKS	07-03-02
GW 5	PEDESTRIAN ACCESS	07-03-02
GW 6	RIGHT OF WAY MARKER	07-03-02
GW 7	NEWSPAPER AND MAILBOX STOP LAYOUT	07-03-02
GW 8	NEWSPAPER AND MAILBOX SUPPORT HARDWARE	07-03-02
GW 9	DELINEATION HARDWARE	07-03-02
GW 10	DELINEATION APPLICATION	07-03-02
	Paving (PV)	
PV 1	JOINTS FOR HIGHWAYS WITH CONCRETE TRAFFIC LANES AND SHOULDERS	07-03-02
PV 2	PAVEMENT/APPROACH SLAB DETAILS	12-19-02
PV 3	CONCRETE PAVEMENT DETAILS FOR URBAN AND INTERSTATE	07-03-02
PV 4	CONCRETE PAVEMENT DETAILS FOR URBAN AND INTERSTATE	07-03-02
PV 5	URBAN CONCRETE PAVEMENT DETAILS	07-03-02
PV 6	RUMBLE STRIPS	07-03-02
PV 7	RUMBLE STRIPS -TYPICAL APPLICATION	07-03-02
	Signals (SL)	
SL 1	TRAFFIC SIGNALS MAST ARM POLE AND LUMINAIRE EXTENSION	07-03-02
SL 2	TRAFFIC SIGNALS MAST ARM DETAIL 25' THRU 65'	07-03-02
SL 3	UNDERGROUND SERVICE PEDESTAL DETAIL	07-03-02
SL 4	TRAFFIC SIGNALS MAST ARM POLE FOUNDATION	07-03-02
SL 5	BREAKAWAY POST MOUNTED TRAFFIC SIGNAL POLE	07-03-02
SL 6	POWER SOURCE DETAILS	07-03-02
SL 7	SPAN WIRE SIGNAL POLE DETAIL	07-03-02
SL 8	SIGNAL HEAD DETAILS	07-03-02
SL 9	PEDESTRIAN SIGNAL ASSEMBLY	07-03-02
SL 10	CONTROLLER BASE DETAIL	07-03-02
SL 11	TRAFFIC SIGNALS LOOP DETECTOR DETAIL	07-03-02
SL 12	JUNCTION BOX DETAILS	07-03-02
SL 13	TRAFFIC COUNTING LOOP DETECTOR DETAIL	12-19-02
SL 14	LIGHT POLE BREAKAWAY BASE	07-03-02
SL 15	LUMINARIE BREAKAWAY BASE DETAIL	07-03-02
SL 16	SINGLE TRANSFORMER SUBSTATION DETAILS	07-03-02
SL 17	LIGHT POLE ANCHOR BASE	07-03-02
SL 18	LIGHT POLE FOUNDATION EXTENSION	07-03-02
	Signs (SN)	
SN 1	BRIDGE LOAD LIMITS SIGNS	07-03-02
SN 2	FLASHING SCHOOL SIGN	12-19-02
SN 3	OVERHEAD SCHOOL FLASHER	07-03-02
SN 4	FLASHING STOP SIGN	12-19-02
SN 5	TYPICAL INSTALLATION FOR MILEPOST SIGNS	12-19-02
SN 6	NOT USED	07-03-02
SN 7	PLACEMENT OF GROUND MOUNTED SIGNS	07-03-02
SN 8	GROUND MOUNTED TIMBER SIGN POST (P1)	12-19-02
SN 9	GROUND MOUNTED TUBULAR STEEL SIGN POST (P2)	07-03-02
SN 10	GROUND MOUNTED SQUARE STEEL SIGN POST (P3)	07-03-02
SN 11	SLIPBASE GROUND MOUNTED TUBULAR STEEL SIGN POST (P-4)	07-03-02
SN 12A	GROUND MOUNTED SIGN INSTALLATION DETAILS	07-03-02
SN 12B	GROUND MOUNTED SIGN INSTALLATION DETAILS	07-03-02
SN 12C	GROUND MOUNTED SIGN INSTALLATION DETAILS	07-03-02
	Striping (ST)	
ST 1	OBJECT MARKERS "T" INTERSECTION & PAVEMENT TRANSITION GUIDANCE	12-19-02
ST 2	FREEWAY TURN AROUND MARKINGS	07-03-02
ST 3	TYPICAL PAVEMENT MARKINGS	07-03-02
ST 4	CROSSWALKS, PARKING AND INTERSECTION APPROACHES	07-03-02
ST 5	PAINTED MEDIAN & AUXILIARY LANE DETAILS	07-03-02
ST 6	PASSING/CLIMBING LANES TRAFFIC CONTROL	12-19-02
ST 7	PAVEMENT MARKINGS AND SIGNS AT RAILROAD CROSSING	07-03-02
ST 8	PLOWABLE PAVEMENT MARKERS	07-03-02
	Structures and Walls (SW)	
SW 1A	WELDED END GUARD UNIT	07-03-02
SW 1B	PRECAST CONCRETE CATTLE GUARD	07-03-02
SW 2	NOISE WALL PLACEMENT AREA	07-03-02
SW 3A	PRECAST CONCRETE NOISE WALL 1 OF 2	12-19-02
SW 3B	PRECAST CONCRETE NOISE WALL 2 0F 2	12-19-02
SW 4A	PRECAST CONCRETE RETAINING/NOISE WALL 1 OF 2	12-19-02
SW 4B	PRECAST CONCRETE RETAINING/NOISE WALL 2 OF 2	07-03-02
	Traffic Control (TC)	
TC 1A	CONSTRUCTION ZONE CHANNELIZATION DEVICES	07-03-02
TC 1B	CONSTRUCTION ZONE SIGNING	07-03-02
TC 2A	TRAFFIC CONTROL GENERAL	07-03-02
TC 2B	TRAFFIC CONTROL GENERAL	07-03-02
TC 3	TRAFFIC CONTROL PROJECT LIMIT SIGNING	07-03-02
TC 4	TRAFFIC CONTROL URBAN INTERSECTION WITH ROADWAYS UNDER 50 MPH	07-03-02
TC 5	TRAFFIC CONTROL URBAN INTERSECTION WITH ROADWAYS UNDER 50 MPH	07-03-02
TC 6	TRAFFIC CONTROL PEDESTRIAN ROUTING	07-03-02
TC 7	TRAFFIC CONTROL ROAD CLOSURE, DETOUR	07-03-02
TC 8	TRAFFIC CONTROL LANE CLOSURE	07-03-02
TC 9	TRAFFIC CONTROL MULTILANE CLOSURE	07-03-02
TC 10	TRAFFIC CONTROL EXPRESSWAY AND FREEWAY CROSSOVER/ TURN AROUND	07-03-02
TC 11	TRAFFIC CONTROL EXIT RAMP GORE	07-03-02
TC 12	TRAFFIC CONTROL ENTRANCE RAMP GORE	07-03-02
TC 13	TRAFFIC CONTROL SHOULDER-HAUL ROAD	07-03-02
TC 14	TRAFFIC CONTROL FLAGGING OPERATION	07-03-02
TC 15	TRAFFIC CONTROL 2 LANE / 2 WAY SEAL COAT WITH COVER MATERIAL	07-03-02
TC 16	TRAFFIC CONTROL PAVEMENT MARKING	07-03-02

☒ **MARKED BOXES INDICATE DRAWINGS APPLICABLE TO THIS PROJECT**

REVISIONS

NO.	DATE	APPR.	REMARKS
1	02/19/03	B.A.	CHANGE 1

UTAH DEPARTMENT OF TRANSPORTATION
STANDARD DRAWINGS FOR ROAD AND BRIDGE CONSTRUCTION
SALT LAKE CITY, UTAH

RECOMMENDED FOR APPROVAL — FEB.19.2003 DATE

CHAIRMAN STANDARDS COMMITTEE APPROVED — FEB.19.2003 DATE

DEPUTY DIRECTOR

STANDARD DRAWING TITLE: STANDARD DRAWING INDEX SHEET

STD DWG 1-C

CONDUIT LEGEND

CONDUIT LINE STYLE	CONDUIT TYPE AND MINIMUM SIZE	ALLOWABLE CONDUCTOR TYPE
	DUCT BANK: 1 – 4-MULTI-CONDUIT SYSTEM	FIBER OPTIC CABLES
	DUCT BANK: 2 – 4-MULTI-CONDUIT SYSTEM	FIBER OPTIC CABLES
	DUCT BANK: 4 – 4-MULTI-CONDUIT SYSTEM	FIBER OPTIC CABLES
—HV1-1/2— HV1-1/2—	1½" HIGH VOLTAGE CONDUIT	120, 240, OR 480 VAC CONDUCTORS INCLUDING: SIGNAL CONDUCTORS, VMS POWER CONDUCTORS, CAMERA POWER CONDUCTORS OR CAMERA COMPOSITE CABLES
—HV2— HV2—	2" HIGH VOLTAGE CONDUIT	
—HV3— HV3—	3" HIGH VOLTAGE CONDUIT	
—HV4— HV4—	4" HIGH VOLTAGE CONDUIT	
—LV1-1/2— LV1-1/2—	1½" LOW VOLTAGE CONDUIT	DETECTOR LOOP LEAD-IN CABLES, VMS CONTROL CABLES, CAMERA CABLES, RWIS CABLES
—LV2— LV2—	2" LOW VOLTAGE CONDUIT	
—LV3— LV3—	3" LOW VOLTAGE CONDUIT	
—LV4— LV4—	4" LOW VOLTAGE CONDUIT	
—TAL1-1/2— TAL1-1/2—	1½" TAIL CIRCUIT COMMUNICATIONS CONDUIT	FIBER OPTIC CABLES, COPPER COMM CABLES
—TAL2— TAL2—	2" TAIL CIRCUIT COMMUNICATIONS CONDUIT	FIBER OPTIC CABLES, COPPER COMM CABLES
—TAL3— TAL3—	3" TAIL CIRCUIT COMMUNICATIONS CONDUIT	FIBER OPTIC CABLES, COPPER COMM CABLES
—SPR2— SPR2—	2" SPARE CONDUIT	(EMPTY)
—SPR3— SPR3—	3" SPARE CONDUIT	(EMPTY)
—SPR4— SPR4—	4" SPARE CONDUIT	(EMPTY)
	BURIED ELECTRIC CONDUIT	POWER CONDUCTORS
	Existing Buried Electric Conduit	(ADD NEW to Existing Conductors as Noted)
	Existing Conduit	(ADD NEW to Existing Conductors as Noted)
	EXISTING DUCT BANK: 1 – 4-MULTI-CONDUIT SYSTEM	
	EXISTING DUCT BANK: 2 – 4-MULTI-CONDUIT SYSTEM	
	EXISTING DUCT BANK: 4 – 4-MULTI-CONDUIT SYSTEM	
-PWR1-1/2— PWR1-1/2—	1½" POWER CONDUIT	CONDUCTORS WITH VOLTAGE 120V OR GREATER, USUALLY ONLY BETWEEN POWER SERVICE POINT AND POWER SERVICE PEDESTAL
-T/LV3— T/LV3—	3" CONDUIT WITH TWO 1" INNERDUCTS: (ONE 1" TAIL CIRCUIT COMMUNICATIONS INNERDUCT ONE 1" LOW VOLTAGE INNERDUCT)	FIBER OPTIC CABLES, LOW VOLTAGE CONDUCTORS (SAME AS ABOVE)

NOTE: LOWER-CASE TEXT INDICATES EXISTING CONDUIT

ABBREVIATIONS

ATMS	ADVANCED TRAFFIC MANAGEMENT SYSTEM
CAB	CABINET
CCTV	CLOSED CIRCUIT TELEVISION
CCVC	CAMERA CONTROL AND VIDEO CABLE
DLC	DETECTOR LOOP LEAD-IN CABLES
FRE	FIBERGLASS REINFORCED EPOXY
GND	GROUND CONDUCTOR
HDPE	HIGH DENSITY POLYETHYLENE
HFC	HYBRID FIBER CABLE
P	PLASTIC
PC	POLYMER CONCRETE
PCCP	PORTLAND CEMENT CONCRETE PAVEMENT
PTCC	PAN-TILT CONTROL CABLE
PTZ	PAN / TILT / ZOOM
PWR	POWER
RMS	RAMP METER STATION
ROW	RIGHT-OF-WAY
RWIS	ROADWAY WEATHER INFORMATION SYSTEM
## SMF	SINGLE MODE FIBER (## INDICATES NUMBER OF STRANDS)
TMS	TRAFFIC MONITORING STATION
TSC	TRAFFIC SIGNAL CONTROLLER
VAC	VOLTS (ALTERNATING CURRENT)
VID	VIDEO
VMS	VARIABLE MESSAGE SIGN
WP	WORKING POINT

EQUIPMENT LEGEND

FUTURE OR EXISTING	REQ'D	EQUIPMENT TYPE
		334, VMS, OR ATMS CABINET (WITH CABINET NUMBER)
		SIGNAL CABINET
		CCTV CAMERA / PTZ / POLE AND FOUNDATION
		TYPE 1 FREEWAY VARIABLE MESSAGE SIGN (VMS) ASSEMBLY
		UNDERGROUND POWER SERVICE PEDESTAL
ps	PS	POWER SERVICE POINT
		POWER POLE
		METER ON POLE
		DETECTOR LOOP
		PAD MOUNTED TRANSFORMER
		POLE MOUNTED TRANSFORMER
		ROADWAY WEATHER INFORMATION SYSTEM
		POLE
		ADVANCE FLASHING BEACON SIGN ON POLE
		MASTARM WITH SIGNAL HEADS
		SIGNAL HEADS
		METER-ON SIGNAL HEAD

AERIAL LEGEND

CONDUIT LINE STYLE	DESCRIPTION
	Existing Overhead Power Lines
	OVERHEAD POWER LINES

JUNCTION BOX LEGEND

Existing	REQ'D	PAY ITEM NAME
I-PC	I-PC	TYPE I POLYMER CONCRETE JUNCTION BOX
II-PC	II-PC	TYPE II POLYMER CONCRETE JUNCTION BOX
III-PC	III-PC	TYPE III POLYMER CONCRETE JUNCTION BOX
I-P	I-P	TYPE I PLASTIC JUNCTION BOX
II-P	II-P	TYPE II PLASTIC JUNCTION BOX

CONDUCTOR LEGEND

CALLOUT	REQ'D ITEM
X-#Y(Z)	(X) AWG # (Y) POWER CONDUCTORS FOR (Z)
X-#Y(GND)	(X) AWG # (Y) GROUND WIRE
IE: 2-#6(VMS CAB)	INDICATES (2)AWG#6 POWER
1-#8(GND)	CONDUCTORS REQ'D AND (1)AWG#8 GROUND WIRE REQ'D FOR A VMS CABINET.

DETAIL CALLOUT LEGEND

CALLOUT ON PLAN	MEANING
"X" "Y"	SEE DETAIL "X" ON SHEET "Y"

ELECTRICAL SCHEMATIC LEGEND

EXISTING	SYMBOL	EQUIPMENT
		BREAKER
M	M	METER
N	N	NEUTRAL LUG
EG	EG	EQUIPMENT GROUND LUG
		GROUND ROD
		TRANSFORMER
		SWITCH

NOTE: DASHED LINES INDICATE EXISTING EQUIPMENT

PROJECT NOTE LEGEND

- CB — CONNECT NEW CONDUIT TO Existing Junction Box or Vault
- BC — INSTALL NEW BOX OR VAULT IN Existing Conduit Run
- CC — CONNECT NEW CONDUIT TO Existing Conduit
- SP — SPLICE POINT

STANDARD CALL OUT FOR CONDUCTOR INSTALLATION

lv3 – LOWER CASE TEXT INDICATES EXISTING CONDUIT

1-#2C – UPPER CASE TEXT INDICATES REQUIRED NEW CONDUCTORS

NO.	DATE	APPR.	REMARKS

REVISIONS

UTAH DEPARTMENT OF TRANSPORTATION
STANDARD DRAWINGS FOR ROAD AND BRIDGE CONSTRUCTION
SALT LAKE CITY, UTAH

RECOMMENDED FOR APPROVAL — JULY 03,2002 DATE

CHAIRMAN STANDARDS COMMITTEE APPROVED — JULY 03,2002 DATE

DEPUTY DIRECTOR

STANDARD DRAWING TITLE: LEGEND SHEET

STD DWG: AT 1

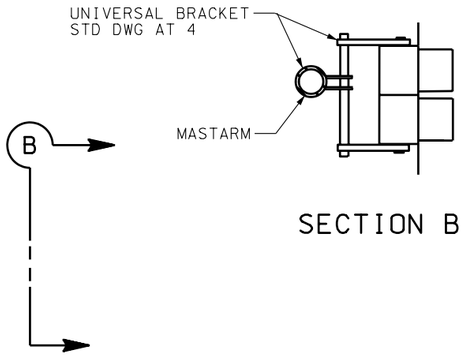

SECTION B

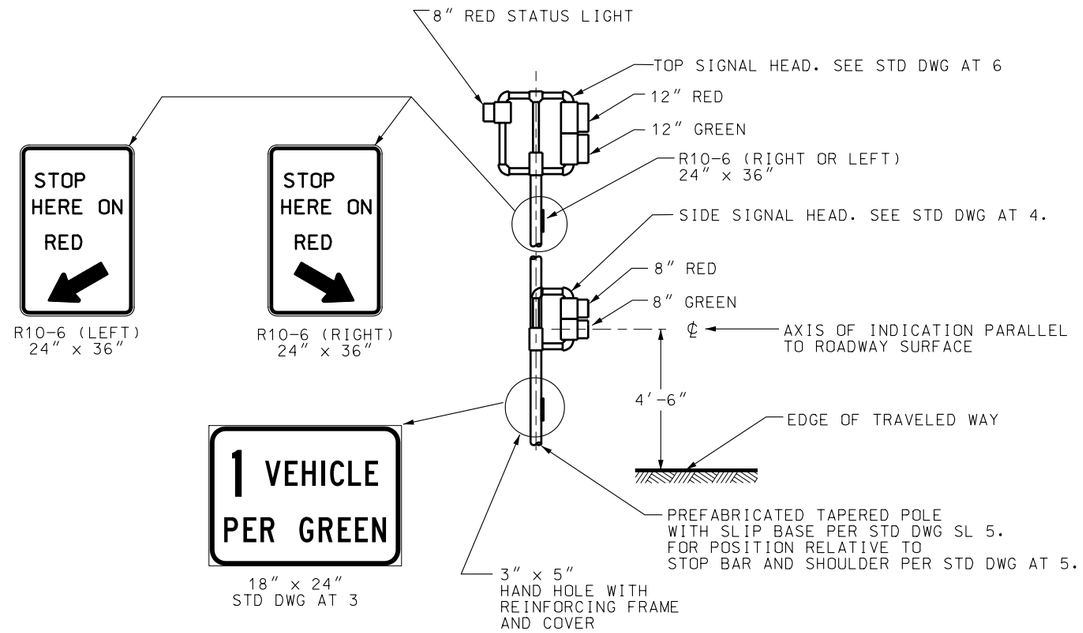

RAMP METER SIGNAL ASSEMBLY
WITH ENFORCEMENT INDICATION

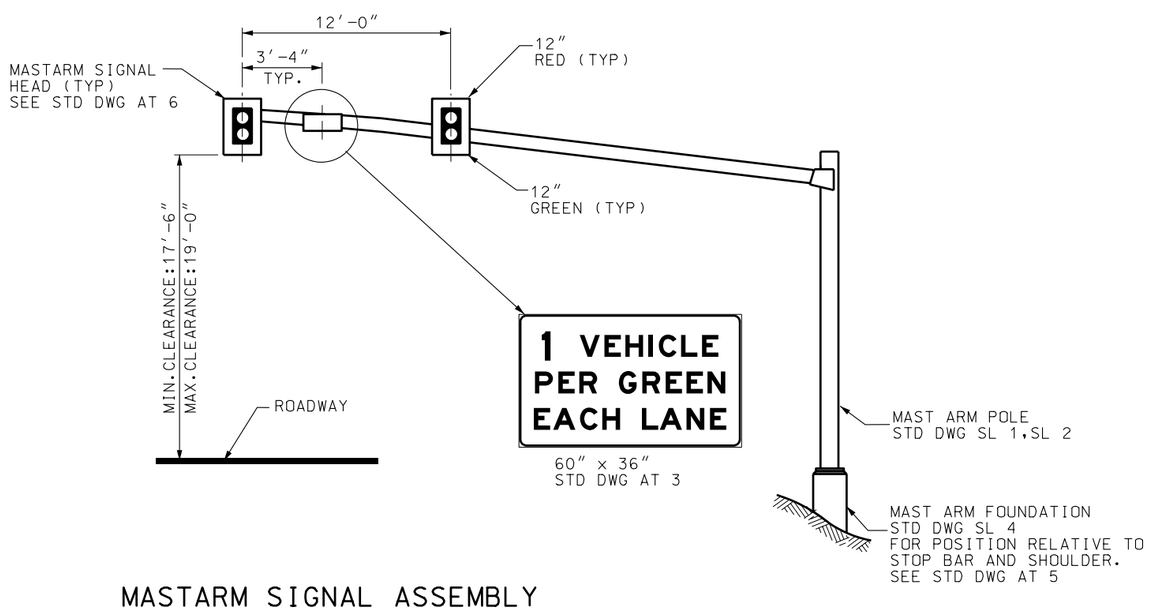

MASTARM SIGNAL ASSEMBLY

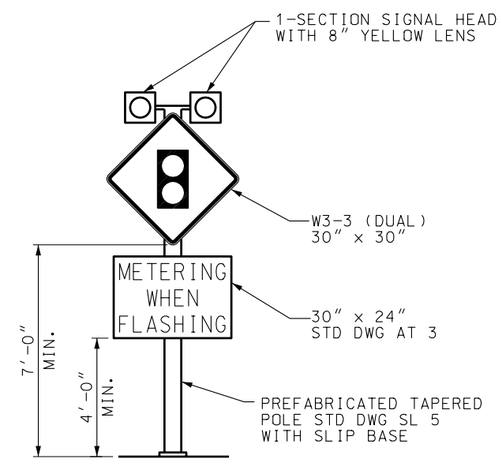

ADVANCE FLASHING BEACON ASSEMBLY

NO.	DATE	APPR.	REMARKS

REVISIONS

UTAH DEPARTMENT OF TRANSPORTATION
STANDARD DRAWINGS FOR ROAD AND BRIDGE CONSTRUCTION
SALT LAKE CITY, UTAH

RECOMMENDED FOR APPROVAL — JULY 03,2002 DATE

CHAIRMAN STANDARDS COMMITTEE
APPROVED — JULY 03,2002 DATE

DEPUTY DIRECTOR

RAMP METER DETAILS

STANDARD DRAWING TITLE

STD DWG
AT 2

SIGN DETAIL
NOT TO SCALE

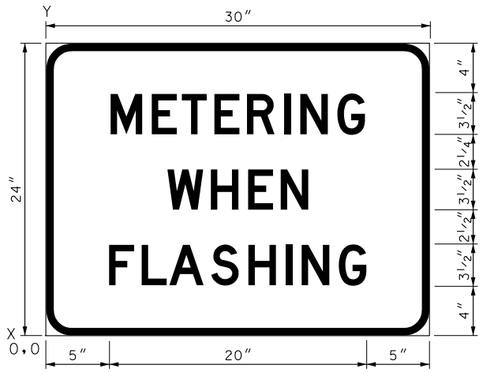

WIDTH × HEIGHT	30″ × 24″
BORDER WIDTH	⅝″
CORNER RADIUS	2″
MOUNTING	GROUND
BACKGROUND	TYPE: REFLECTIVE
	COLOR: WHITE
LEGEND/BORDER	TYPE: NON-REFLECTIVE
	COLOR: BLACK

COORDINATES ARE TO LOWER LEFT CORNERS

Y FONT	LETTER POSITIONS (X)														HT LEN
15½	M	E	T	E	R	I	N	G							3½
D	5	8¼	10⅝	13⅛	15¾	18⅝	20	23							20
9¾	W	H	E	N											3½
D	9½	13	15¾	18¼											11
4	F	L	A	S	H	I	N	G							3½
D	5	7½	9⅝	13	15¾	18¾	20	23							20¼

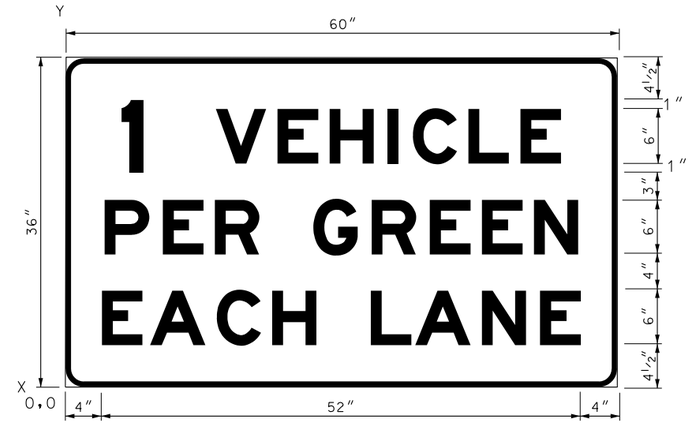

WIDTH × HEIGHT	60″ × 36″
BORDER WIDTH	⅝″
CORNER RADIUS	2″
MOUNTING	GROUND
BACKGROUND	TYPE: REFLECTIVE
	COLOR: WHITE
LEGEND/BORDER	TYPE: NON-REFLECTIVE
	COLOR: BLACK

COORDINATES ARE TO LOWER LEFT CORNERS

Y FONT	LETTER POSITIONS (X)														HT LEN
24½	V	E	H	I	C	L	E								6
EM	16¼	23	28⅝	35	37¾	43¾	49¼								37½
23½	1														6
EM	6⅛														2½
14½	P	E	R	G	R	E	E	N							6
EM	4¼	10⅝	16¼	27	33¼	39½	45¼	50¾							51¼
4½	E	A	C	H	L	A	N	E							6
EM	4	9¼	16½	22½	33⅛	38	45¼	51½							52

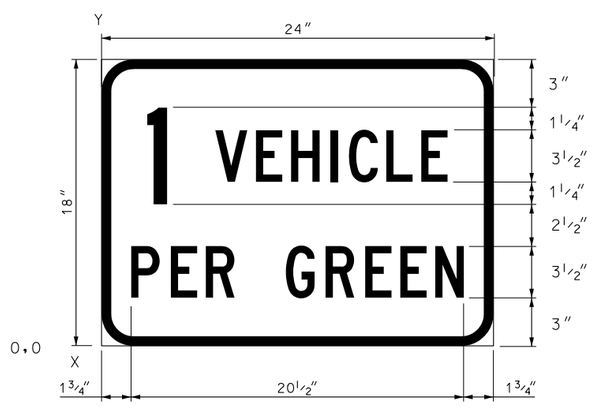

WIDTH × HEIGHT	24″ × 18″
BORDER WIDTH	⅝″
CORNER RADIUS	2″
MOUNTING	GROUND
BACKGROUND	TYPE: REFLECTIVE
	COLOR: WHITE
LEGEND/BORDER	TYPE: NON-REFLECTIVE
	COLOR: BLACK

COORDINATES ARE TO LOWER LEFT CORNERS

Y FONT	LETTER POSITIONS (X)														HT LEN
10¼	V	E	H	I	C	L	E								3½
C	7	9⅜	11⅝	14	15⅛	17⅜	19⅝								14¼
9	1														6
C	2¾														1¼
3	P	E	R	G	R	E	E	N							3½
C	1¾	4¼	6⅜	11¼	13¾	16⅛	18¼	20⅜							20½

REVISIONS

NO.	DATE	APPR.	REMARKS

UTAH DEPARTMENT OF TRANSPORTATION
STANDARD DRAWINGS FOR ROAD AND BRIDGE CONSTRUCTION
SALT LAKE CITY, UTAH

RECOMMENDED FOR APPROVAL — JULY 03,2002 DATE
CHAIRMAN STANDARDS COMMITTEE APPROVED — JULY 03,2002 DATE
DEPUTY DIRECTOR

STANDARD DRAWING TITLE
RAMP METER
SIGN PANEL

STD DWG
AT 3

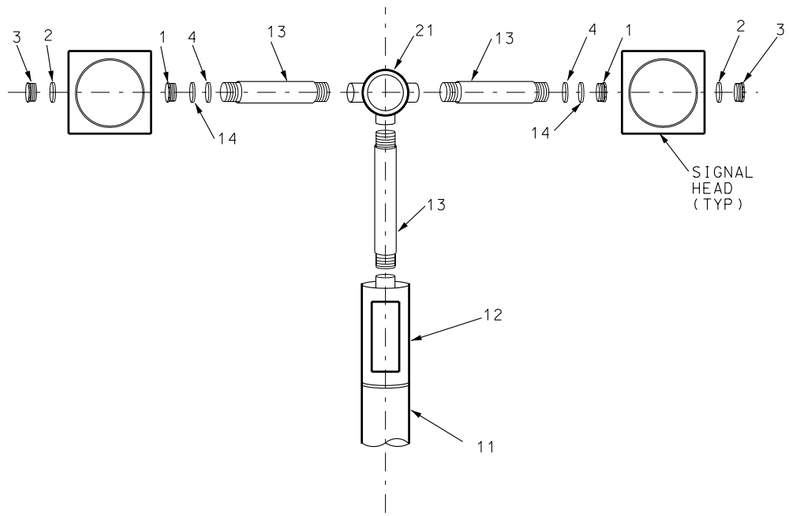

ADVANCE FLASHING BEACON SIGNAL HEAD MOUNTING DETAILS

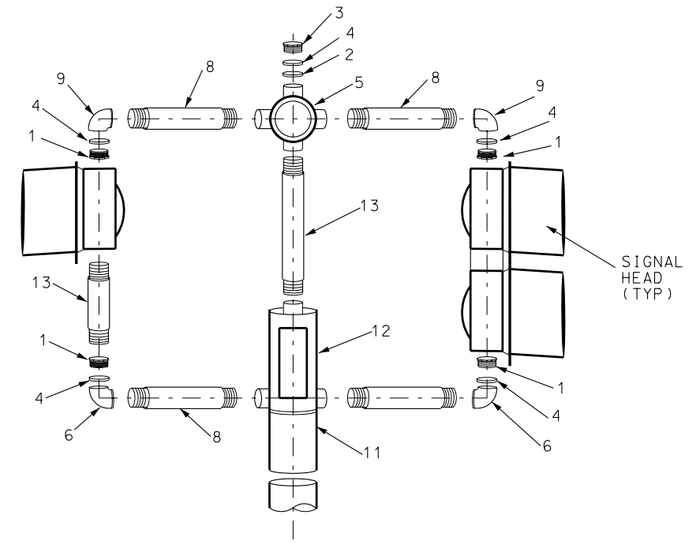

TOP SIGNAL HEAD MOUNTING DETAILS

WITH ENFORCEMENT INDICATION

NOTES:

1. LOCK NIPPLE, 1½″ x 1¾″.
2. LOCK NUT, 1½″.
3. ORNAMENTAL CAP, LONG.
4. WASHER, STAINLESS STEEL BAND, 2 WRAPS.
5. CENTER HUB W/ COVER PLATE 4-WAY.
6. ELBOW, 90°, 1½″ SERRATED.
7. ROUND POLE PLATE.
8. GALVANIZED PIPE 1½″ x 12″ THREADED BOTH ENDS.
9. 1½″ PLAIN ELBOW.
10. ¾″ STAINLESS STEEL.
11. POLE SHAFT.
12. POSTMOUNT WITH TERMINAL COMPARTMENT.
13. 1½″ PIPE, LENGTH VARIABLE, THREADED BOTH ENDS.
14. UNIVERSAL MOUNT STANDARD HARDWARE KIT.
15. STANDARD LOWER ARM
16. COVER
17. STANDARD UPPER ARM
18. UNIVERSAL BRACKET STANDARD ARM KIT
19. GUSSET TUBE.
20. UNIVERSAL BRACKET.

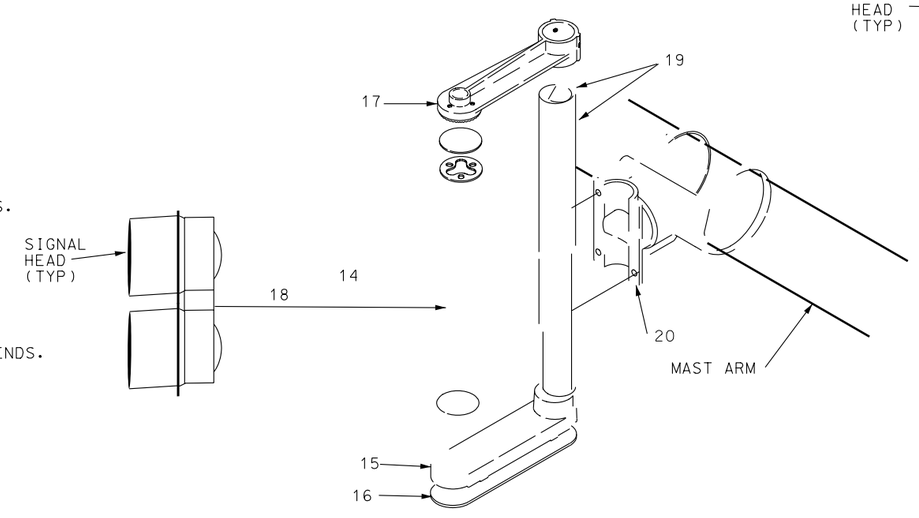

MASTARM SIGNAL HEAD MOUNTING DETAILS

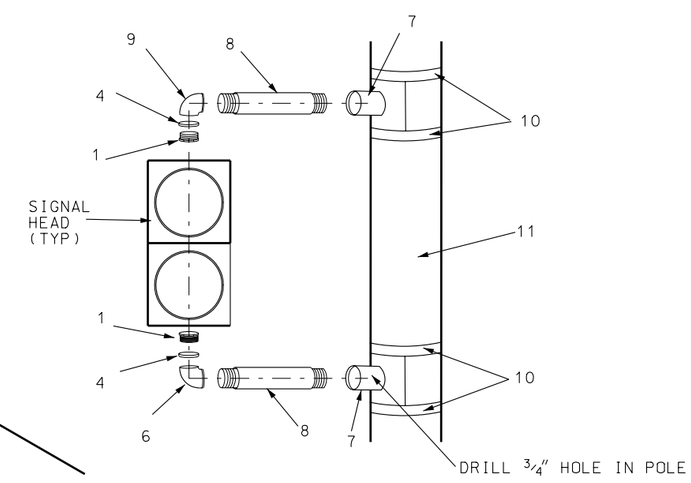

SIDE SIGNAL HEAD MOUNTING DETAILS

REVISIONS				
NO.	DATE	APPR.		REMARKS

UTAH DEPARTMENT OF TRANSPORTATION
STANDARD DRAWINGS FOR ROAD AND BRIDGE CONSTRUCTION
SALT LAKE CITY, UTAH

RECOMMENDED FOR APPROVAL — JULY 03,2002 DATE

CHAIRMAN STANDARDS COMMITTEE APPROVED — JULY 03,2002 DATE

DEPUTY DIRECTOR

STANDARD DRAWING TITLE: TYPICAL RAMP METER SIGNAL HEAD MOUNTING

STD DWG
AT 4

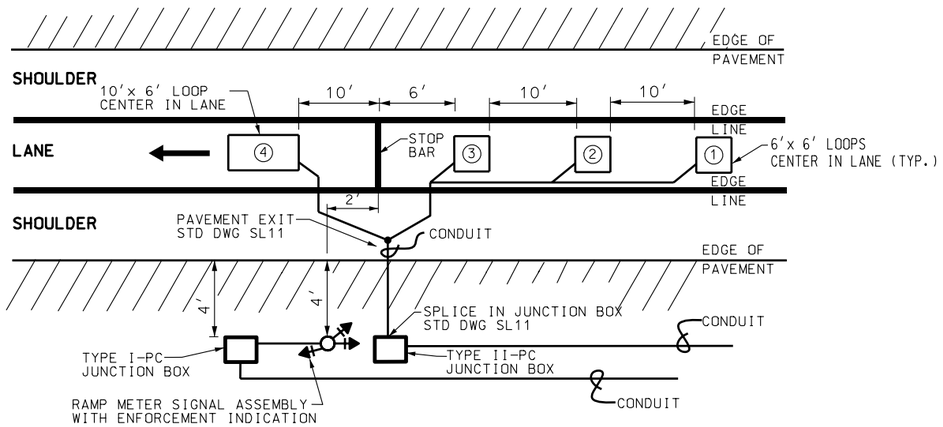

ONE LANE RAMP METER

LOOP INSTALLATION DETAIL
(NOT TO SCALE)

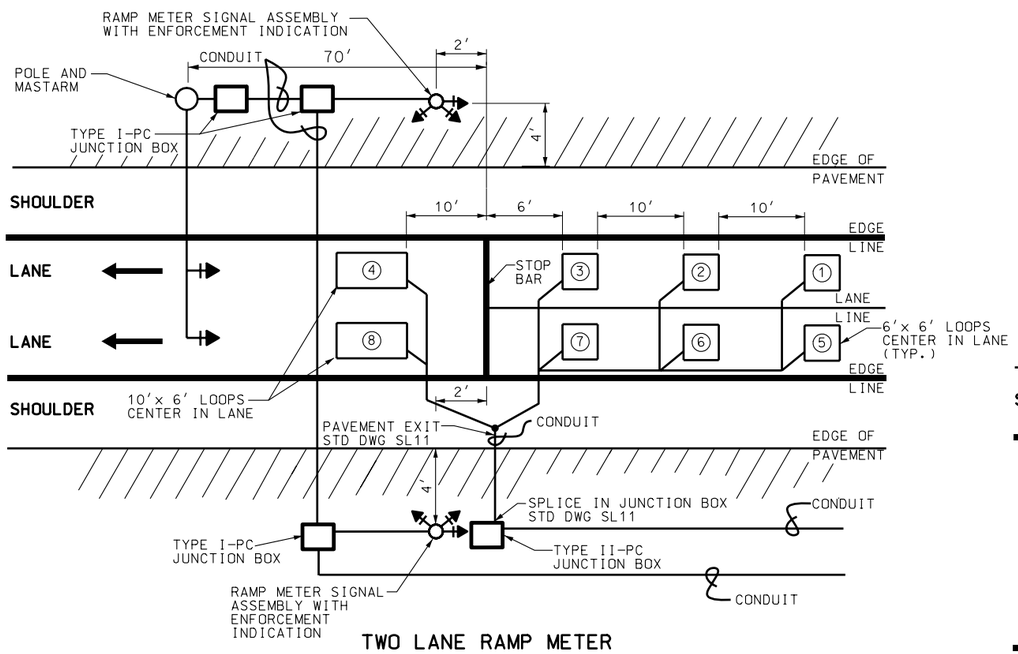

TWO LANE RAMP METER

LOOP INSTALLATION DETAIL
(NOT TO SCALE)

NOTES:

1. THESE DETAILS SHOW THE PASSAGE AND PRESENCE LOOPS. THE LOCATION OF QUEUE LOOPS ARE NOT SHOWN.
2. TAG EACH LOOP WIRE IN EACH JUNCTION BOX, BEGINNING WITH FIRST LOOP IN LANE CLOSEST TO SHOULDER.
3. USE ROUND CUTS FOR CONCRETE.
4. ROUND CUTS CAN ALSO BE FOR ASPHALT IF DESIRED.

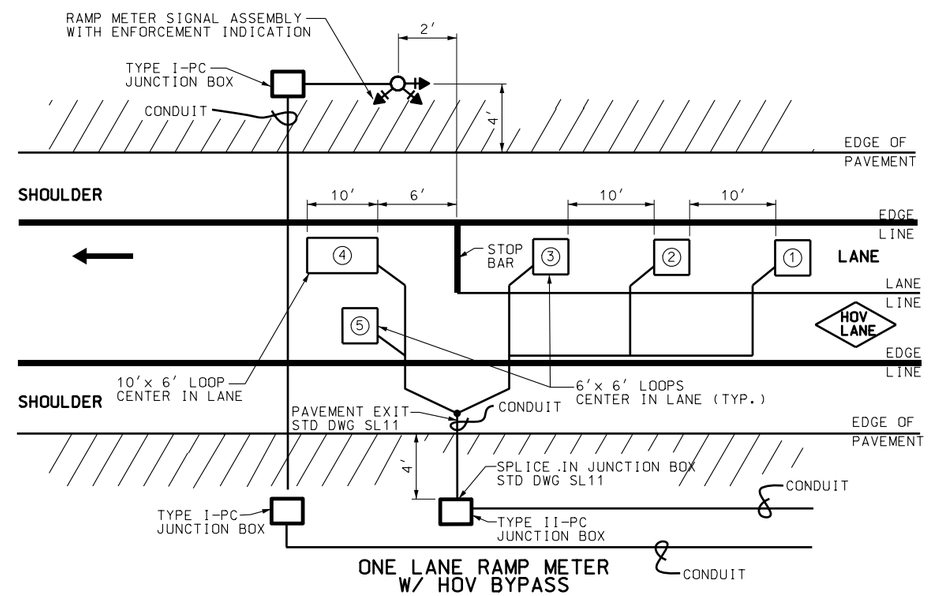

ONE LANE RAMP METER W/ HOV BYPASS

LOOP INSTALLATION DETAIL
(NOT TO SCALE)

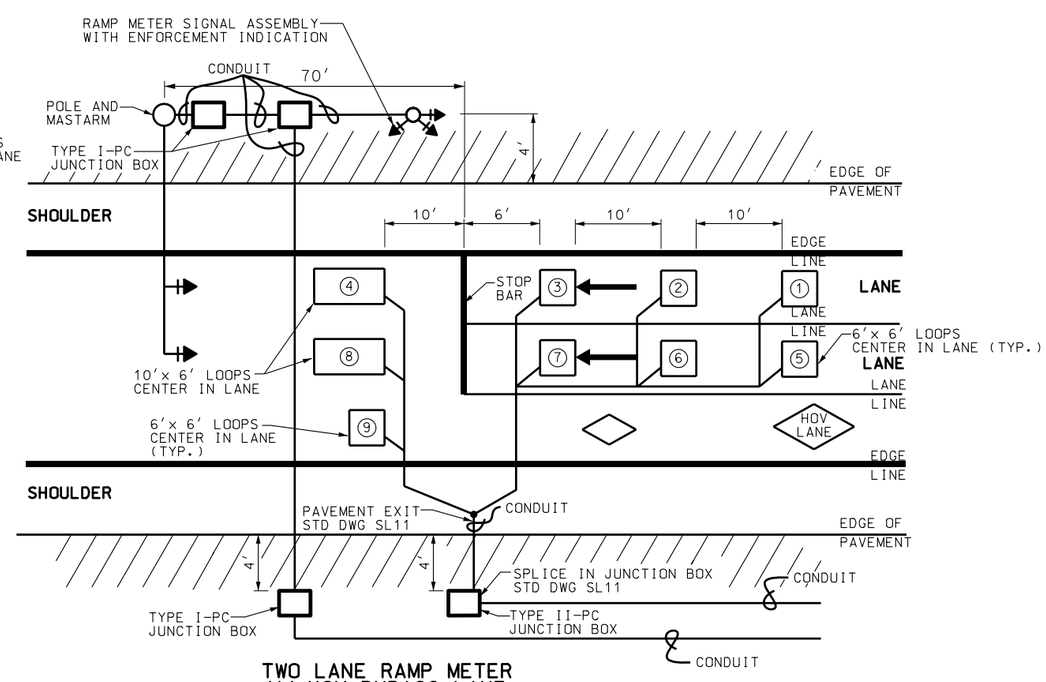

TWO LANE RAMP METER W/ HOV BYPASS LANE

LOOP INSTALLATION DETAIL
(NOT TO SCALE)

NO.	DATE	APPR.	REMARKS

REVISIONS

UTAH DEPARTMENT OF TRANSPORTATION
STANDARD DRAWINGS FOR ROAD AND BRIDGE CONSTRUCTION
SALT LAKE CITY, UTAH

RECOMMENDED FOR APPROVAL — JULY 03,2002 DATE
CHAIRMAN STANDARDS COMMITTEE APPROVED — JULY 03,2002 DATE
DEPUTY DIRECTOR

STANDARD DRAWING TITLE
LOOP INSTALLATION

STD DWG
AT 5

TRENCHED CONDUIT

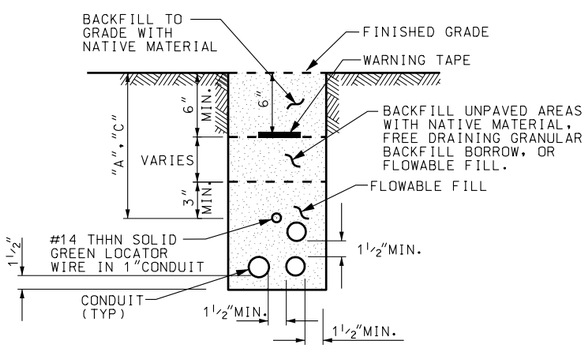

NON-MULTIDUCT CONDUIT

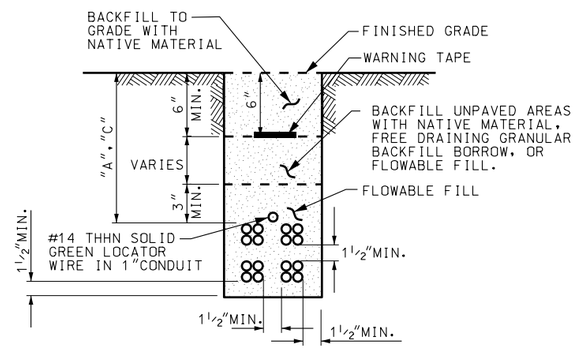

MULTIDUCT CONDUIT

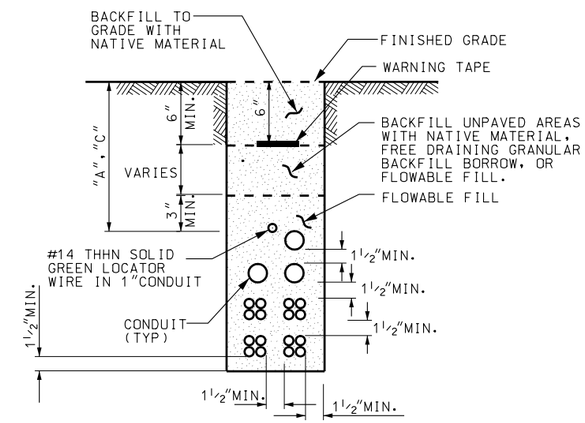

MULTIDUCT AND NON-MULTIDUCT CONDUIT

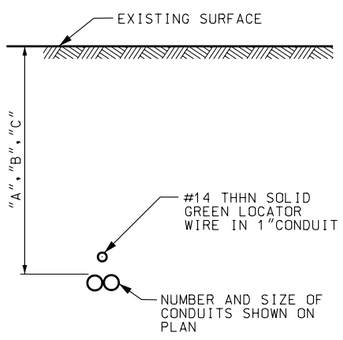

CONDUIT BORED, JACKED, OR DRILLED

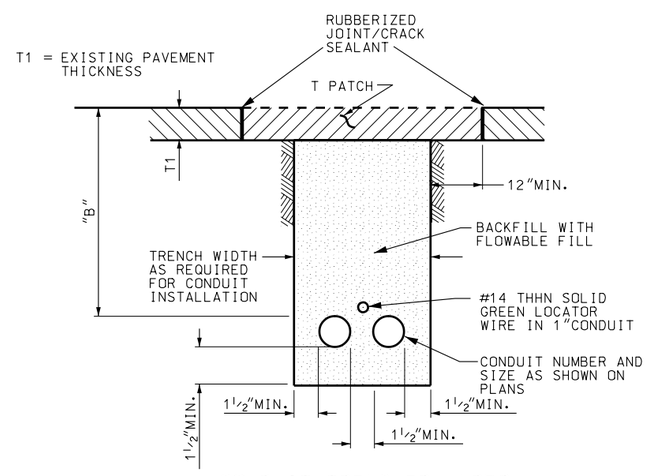

CONDUIT TRENCHED UNDER ASPHALT PAVEMENT RESTORED WITH T PATCH

TABLE 1. T PATCH RESTORATION

EXISTING ASPHALT PAVEMENT THICKNESS (T1) IN INCHES	RESTORATION T PATCH THICKNESS IN INCHES
0 – 3½	3½
3½ – 6	MATCH EXISTING DEPTH
6 OR GREATER	6

TABLE 2. CONDUIT DEPTH

	DEPTH IN INCHES	AREA
A	24	PAVED DITCHES, UNLINED DITCHES, GUTTERS, SIDEWALK
B	36	HIGHWAY RIGHT OF WAY UNDER ASPHALT PAVEMENT SURFACE
C	60	W/IN 20ft OF PAVEMENT EDGE WHERE SIGNS OR DELINEATORS PRESENT

REVISIONS

NO.	DATE	APPR.	REMARKS

UTAH DEPARTMENT OF TRANSPORTATION
STANDARD DRAWINGS FOR ROAD AND BRIDGE CONSTRUCTION
SALT LAKE CITY, UTAH

RECOMMENDED FOR APPROVAL — JULY 03,2002 DATE
CHAIRMAN STANDARDS COMMITTEE APPROVED — JULY 03,2002 DATE
DEPUTY DIRECTOR

STANDARD DRAWING TITLE: CONDUIT DETAILS

STD DWG
AT 6

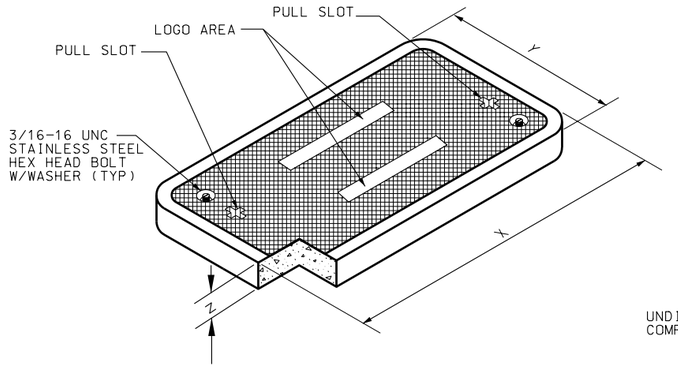

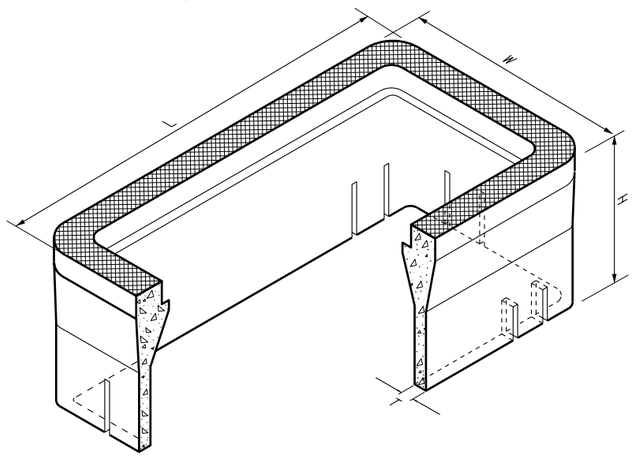

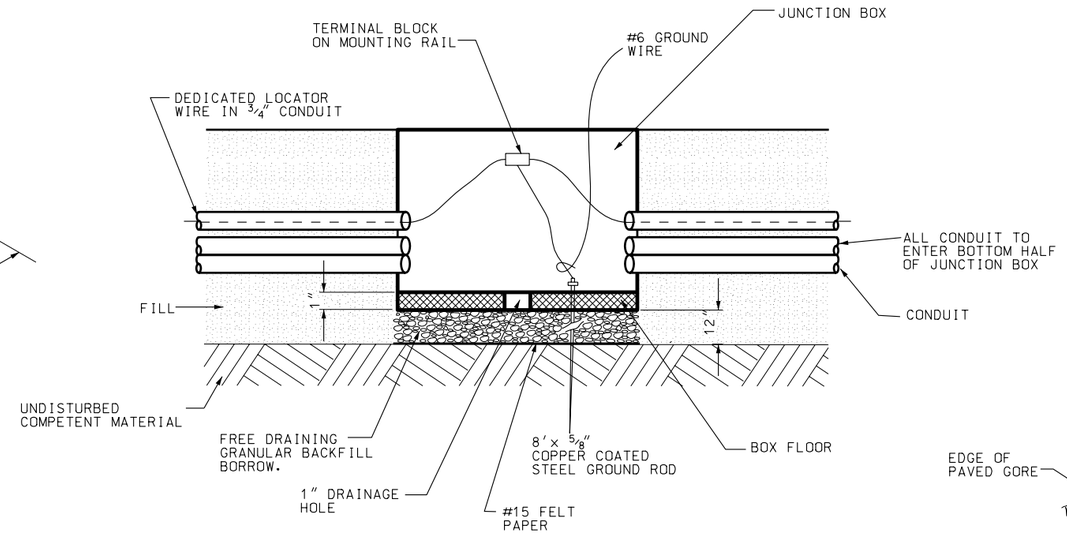

JUNCTION BOX CONDUIT PENETRATION DETAIL

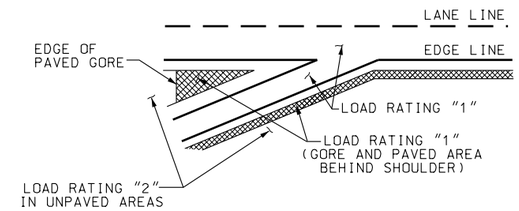

FREEWAY APPLICATION

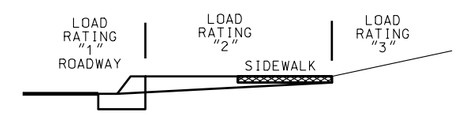

ARTERIAL STREET APPLICATION

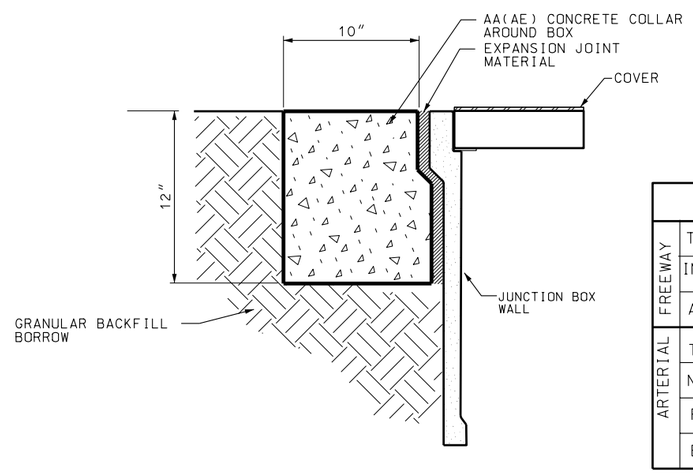

JUNCTION BOX CONCRETE COLLAR DETAIL

BOX AND LID DIMENSIONS

BOX TYPE	"L" inch	"W" inch	"H" inch	"T" inch	"X" inch	"Y" inch	"Z" inch
I-PC	25	16	24	1 1/2	23 1/4	13 3/4	2
II-PC	32 1/4	19 1/4	24	1 1/2	30 1/2	17 1/2	2
III-PC	49 5/8	32 1/8	24	2	47 5/8	30 1/8	3

TABLE 1. FREEWAY AND ARTERIAL STREET APPLICATIONS

	APPLICATION	LOAD RATING 1	2	3
FREEWAY	TRAVELED-WAY/PAVED SHOULDER	X		
	INCIDENTAL TRAFFIC: PAVED GORE, PAVED AREA BEHIND SHOULDER	X		
	ALL OTHER AREAS		X	
ARTERIAL	TRAVELED-WAY/PAVED SHOULDER	X		
	NON-RAISED MEDIAN, INDUSTRIAL/COMMERCIAL DRIVEWAYS	X		
	PARKWAY/SIDEWALK		X	
	BEHIND SIDEWALK, NOT WHEEL LOADING ACCESSIBLE			X

TABLE 2. JUNCTION BOX LID STATIC VERTICAL LOAD RATING

LOAD RATING	COVER ENCLOSURE	DESIGN LOAD	TEST LOAD	TEST AREA
1	HS20	21000 lb	45000 lb	10 in x 20 in
2	INCIDENTAL TRAFFIC (10K)	10000 lb	22500 lb	10 in x 20 in
3	PLASTIC	8000 lb	12000 lb	10 in x 10 in

NOTES:

1. SEE STD DWG SL12 FOR PLASTIC TYPE I AND TYPE II JUNCTION BOXES.

REVISIONS

NO.	DATE	APPR.	REMARKS

UTAH DEPARTMENT OF TRANSPORTATION
STANDARD DRAWINGS FOR ROAD AND BRIDGE CONSTRUCTION
SALT LAKE CITY, UTAH

RECOMMENDED FOR APPROVAL — JULY 03,2002 DATE

CHAIRMAN STANDARDS COMMITTEE APPROVED — JULY 03,2002 DATE

DEPUTY DIRECTOR

POLYMER-CONCRETE JUNCTION BOX DETAILS

STANDARD DRAWING TITLE

STD DWG
AT 7

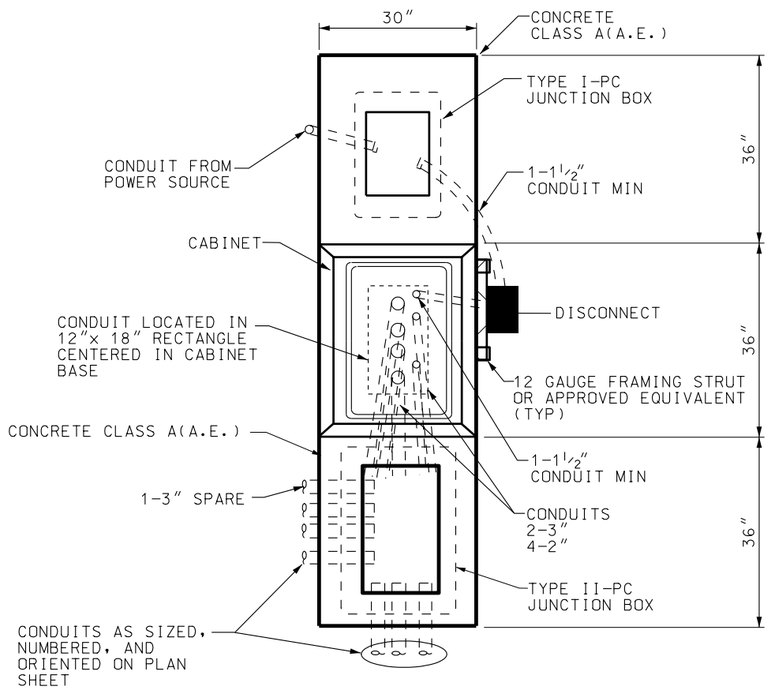

ATMS CABINET - PLAN VIEW

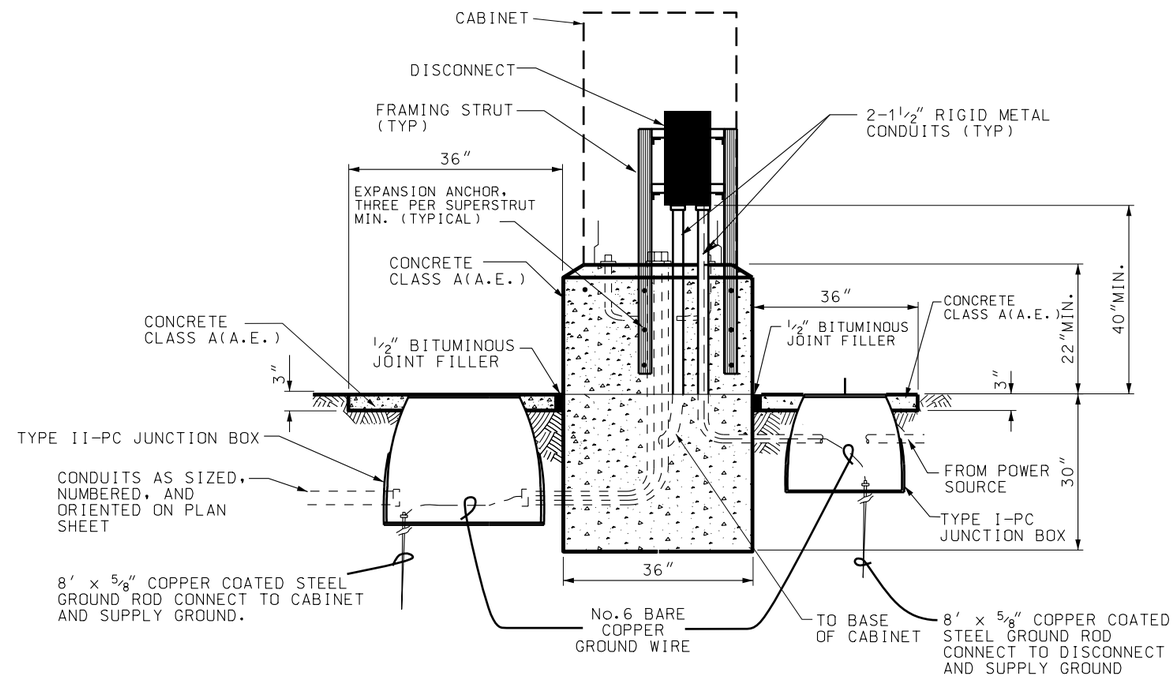

ATMS CABINET - SIDE VIEW

ATMS CABINET WITH 120V DISCONNECT

REVISIONS

NO.	DATE	APPR.	REMARKS

UTAH DEPARTMENT OF TRANSPORTATION
STANDARD DRAWINGS FOR ROAD AND BRIDGE CONSTRUCTION
SALT LAKE CITY, UTAH

RECOMMENDED FOR APPROVAL — JULY 03,2002 DATE

CHAIRMAN STANDARDS COMMITTEE APPROVED — JULY 03,2002 DATE

DEPUTY DIRECTOR

STANDARD DRAWING TITLE: ATMS CABINET W/120V DISCONNECT

STD DWG AT 8

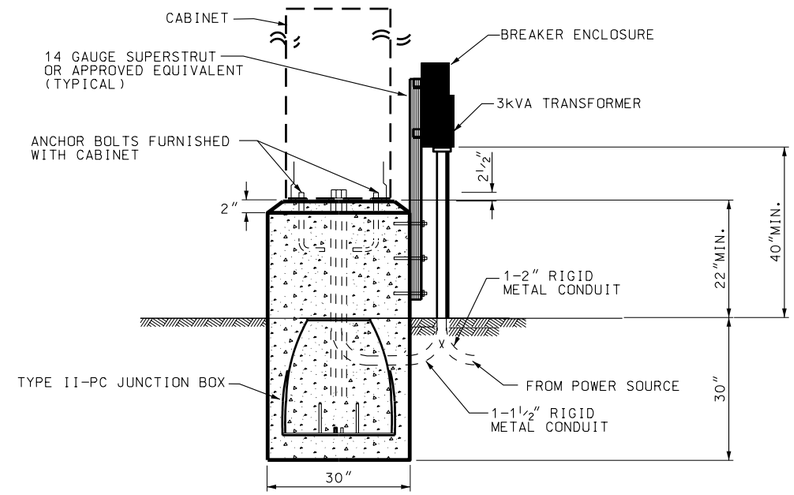

ATMS/334 CABINET - FRONT VIEW

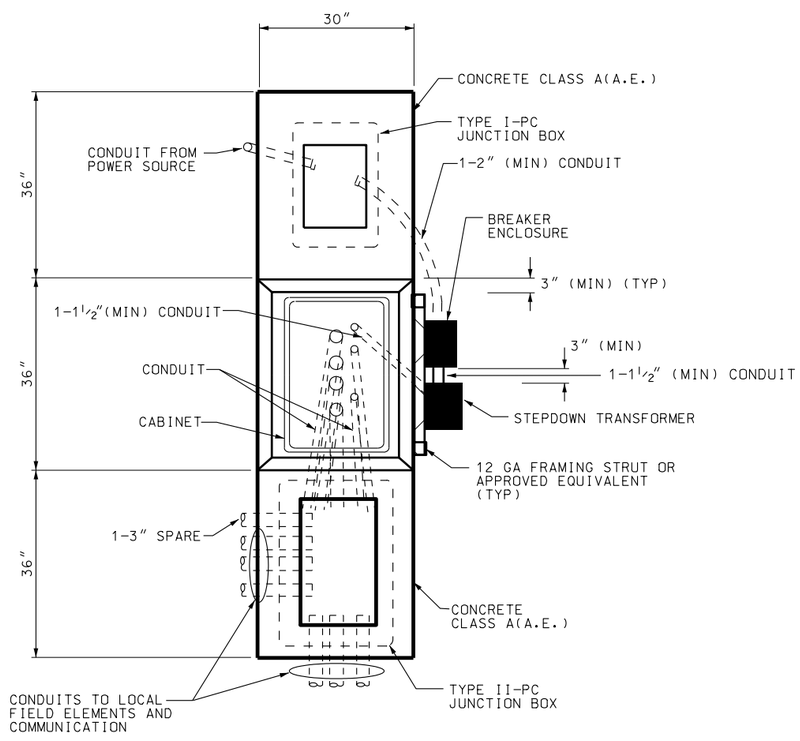

ATMS CABINET - PLAN VIEW

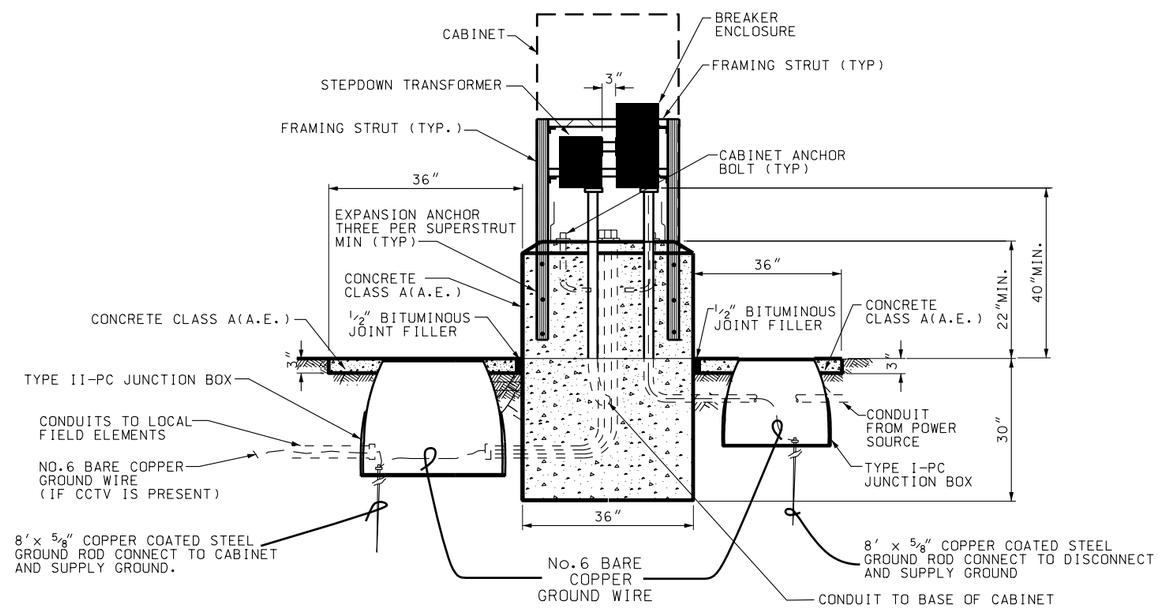

ATMS CABINET - SIDE VIEW

ATMS CABINET WITH STEPDOWN TRANSFORMER

NO.	DATE	APPR.	REMARKS

REVISIONS

UTAH DEPARTMENT OF TRANSPORTATION
STANDARD DRAWINGS FOR ROAD AND BRIDGE CONSTRUCTION
SALT LAKE CITY, UTAH

RECOMMENDED FOR APPROVAL — JULY 03,2002 DATE

CHAIRMAN STANDARDS COMMITTEE APPROVED — JULY 03,2002 DATE

DEPUTY DIRECTOR

STANDARD DRAWING TITLE: ATMS CAB WITH STEPDOWN TRANSFORMER

STD DWG
AT 9

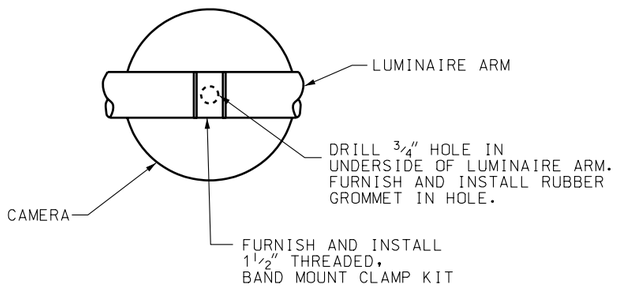

TOP VIEW

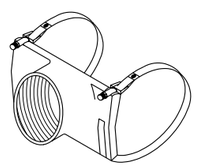

1½" THREADED, BAND MOUNT CLAMP KIT

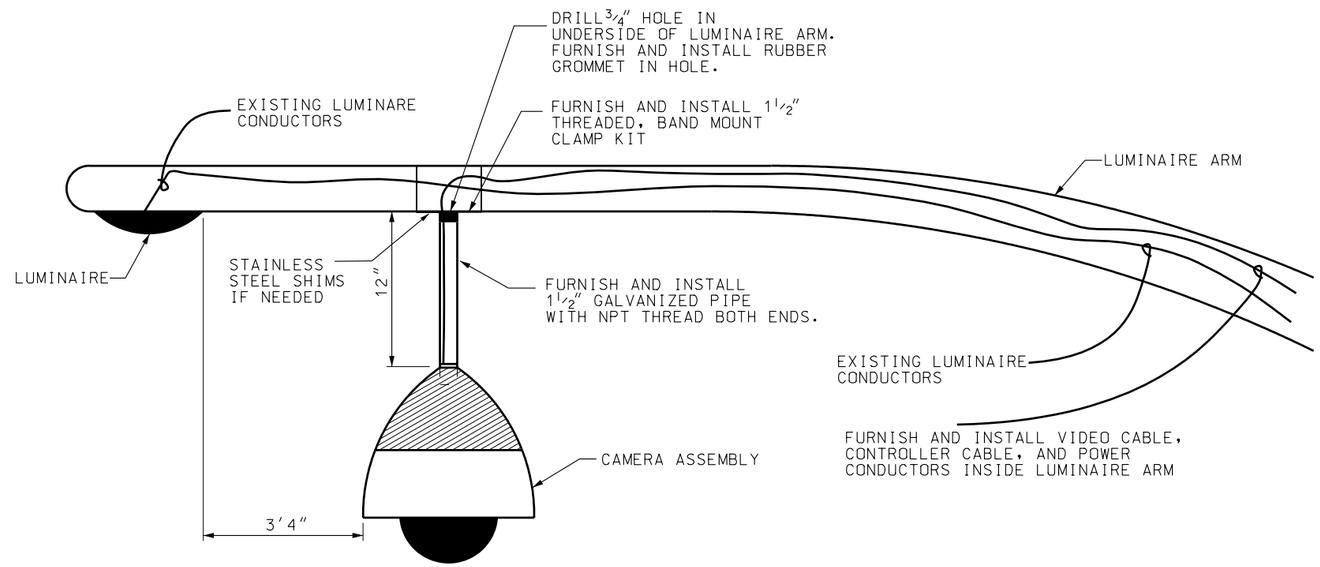

CAMERA ELEVATION W/LUMINAIRE EXTENSION

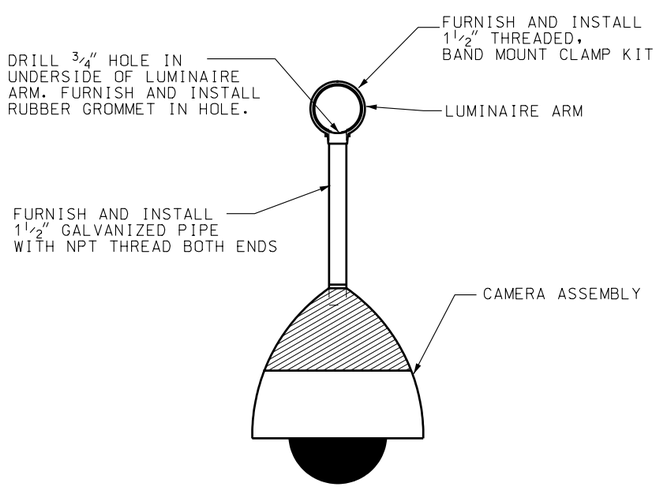

SECTION VIEW

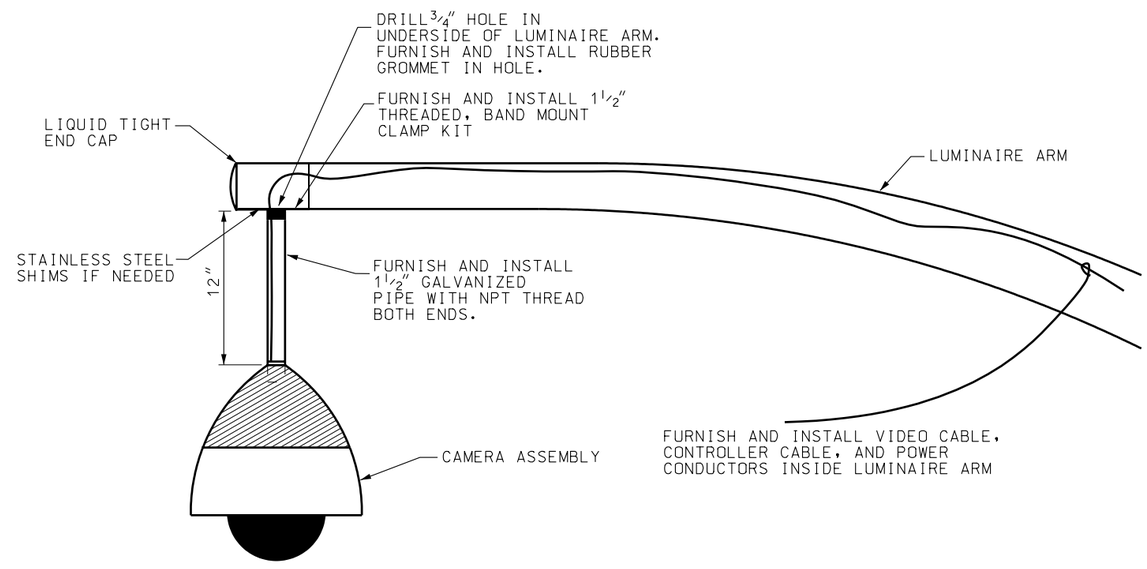

CAMERA ELEVATION W/END CAP

CAMERA ON LUMINAIRE DETAILS

NO.	DATE	APPR.	REMARKS

REVISIONS

UTAH DEPARTMENT OF TRANSPORTATION
STANDARD DRAWINGS FOR ROAD AND BRIDGE CONSTRUCTION
SALT LAKE CITY, UTAH

RECOMMENDED FOR APPROVAL — JULY 03,2002 DATE

CHAIRMAN STANDARDS COMMITTEE APPROVED — JULY 03,2002 DATE

DEPUTY DIRECTOR

STANDARD DRAWING TITLE: DOMED CCTV DETAILS

STD DWG
AT 10

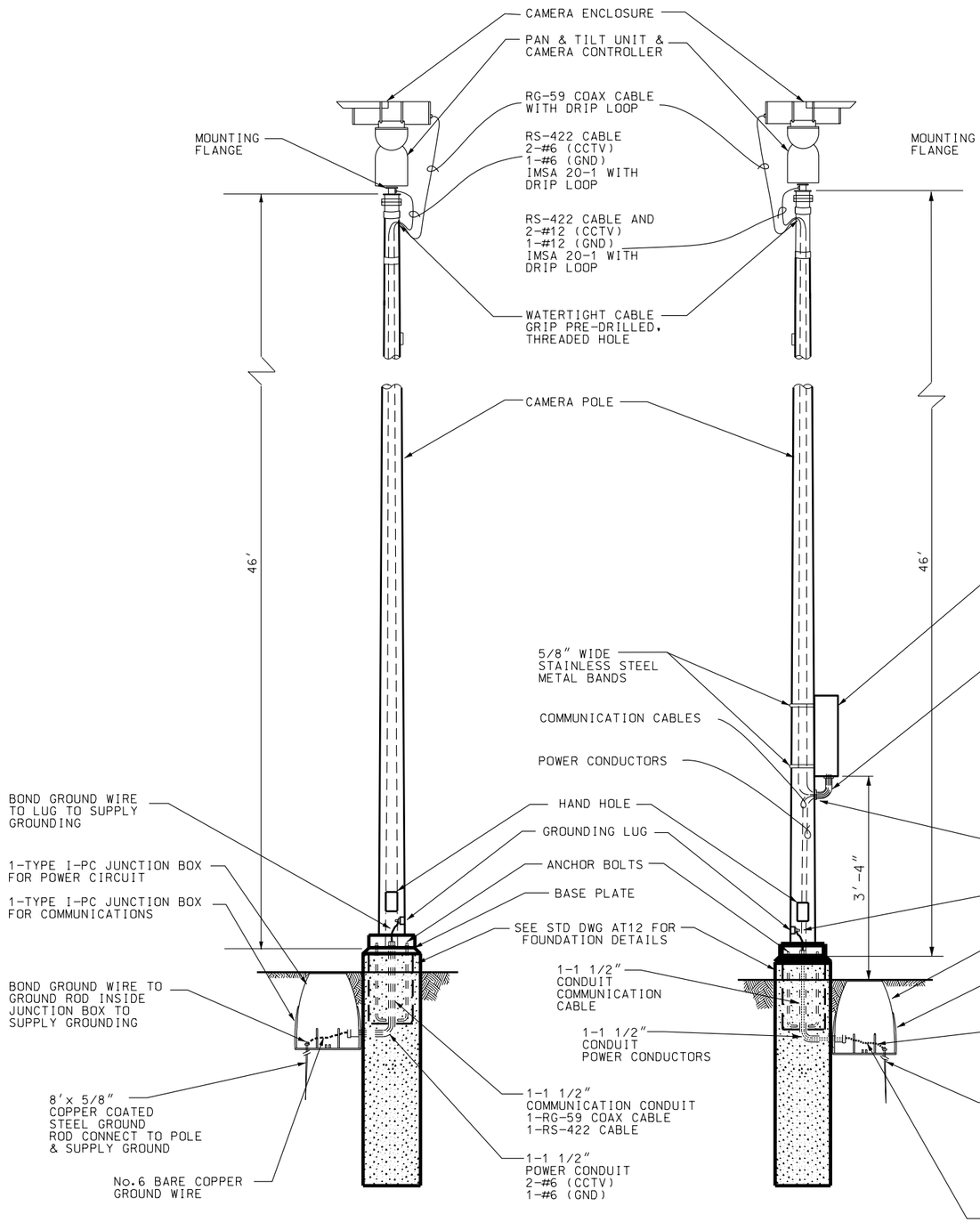

FREEWAY CCTV POLE DETAIL

FREEWAY CCTV POLE DETAIL
W/POLE MOUNT CABINET

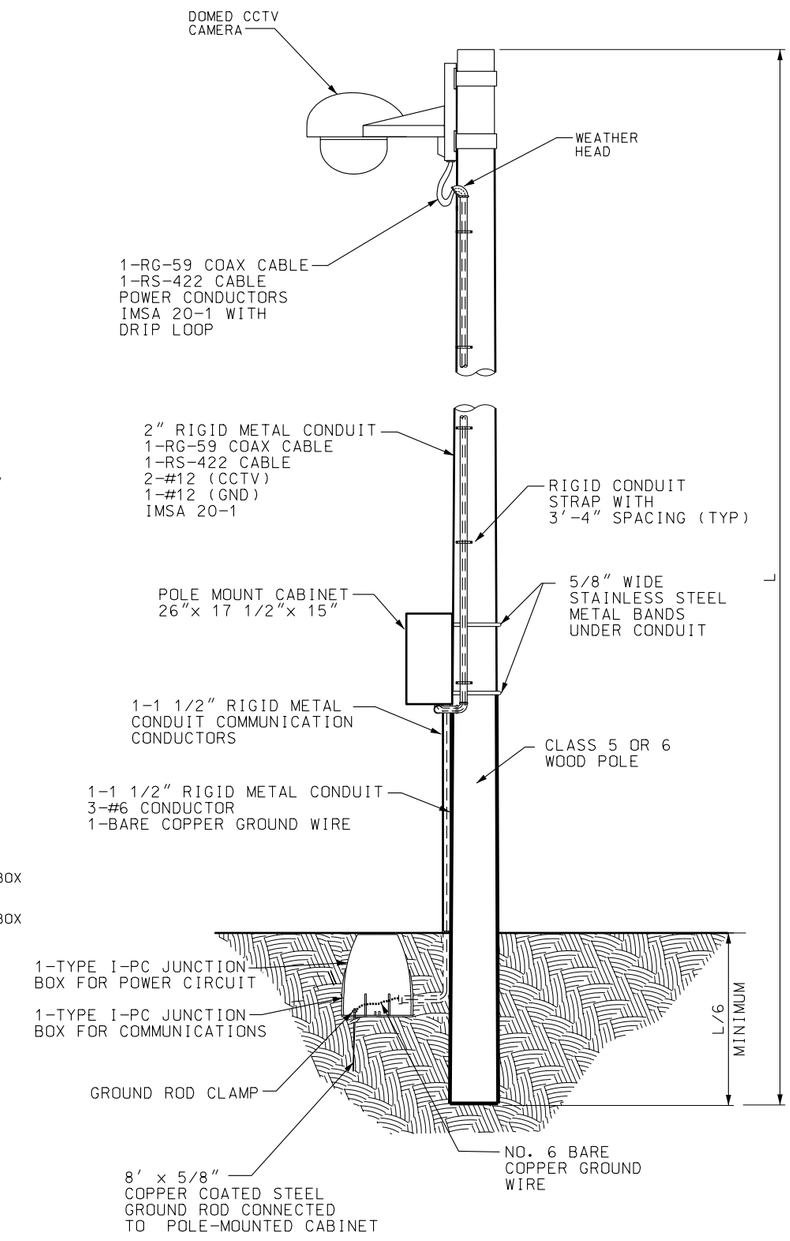

WOOD CCTV POLE DETAIL
W/POLE MOUNT CABINET

NO.	DATE	APPR.	REMARKS

REVISIONS

UTAH DEPARTMENT OF TRANSPORTATION
STANDARD DRAWINGS FOR ROAD AND BRIDGE CONSTRUCTION
SALT LAKE CITY, UTAH

RECOMMENDED FOR APPROVAL — JULY 03,2002 DATE
CHAIRMAN STANDARDS COMMITTEE APPROVED — JULY 03,2002 DATE
DEPUTY DIRECTOR

STANDARD DRAWING TITLE
CCTV POLE DETAIL

STD DWG
AT 11

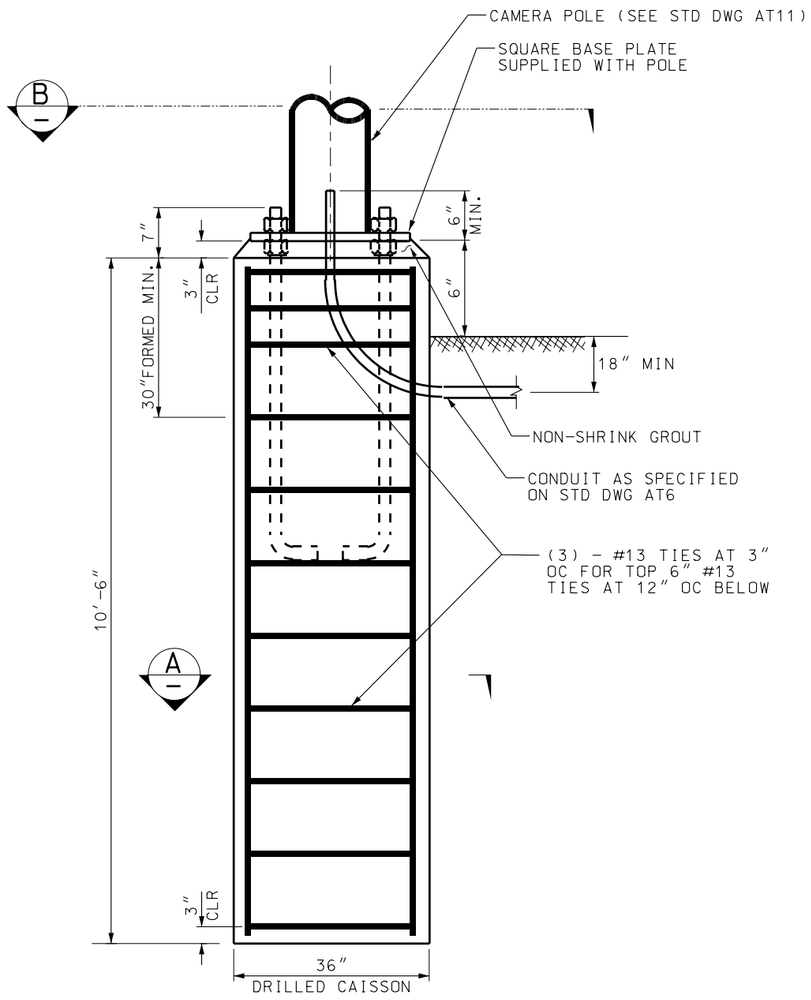

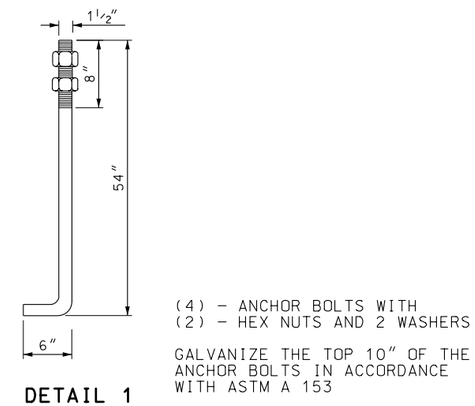

DETAIL 1
ANCHOR BOLTS

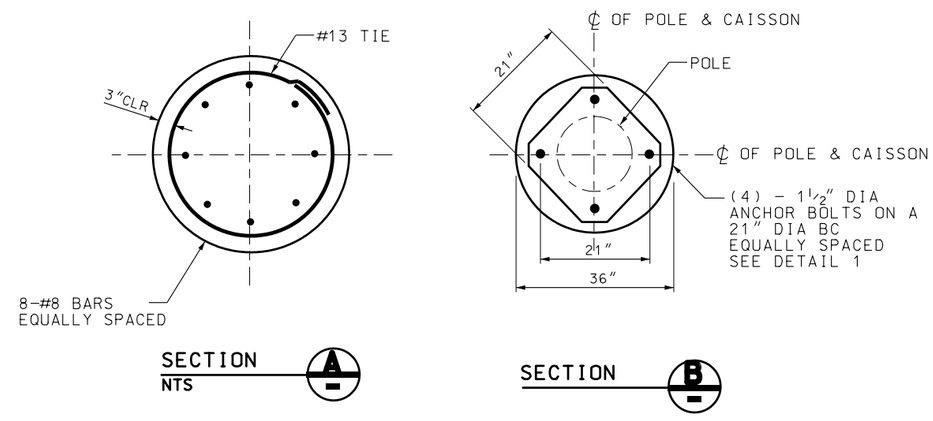

CAISSON FOUNDATION DETAILS

NO.	DATE	APPR.	REMARKS

REVISIONS

UTAH DEPARTMENT OF TRANSPORTATION
STANDARD DRAWINGS FOR ROAD AND BRIDGE CONSTRUCTION
SALT LAKE CITY, UTAH

RECOMMENDED FOR APPROVAL — JULY 03,2002 DATE
CHAIRMAN STANDARDS COMMITTEE APPROVED — JULY 03,2002 DATE
DEPUTY DIRECTOR

CCTV POLE FOUNDATION FOR DEDICATED CCTV POLE
STANDARD DRAWING TITLE

STD DWG
AT 12

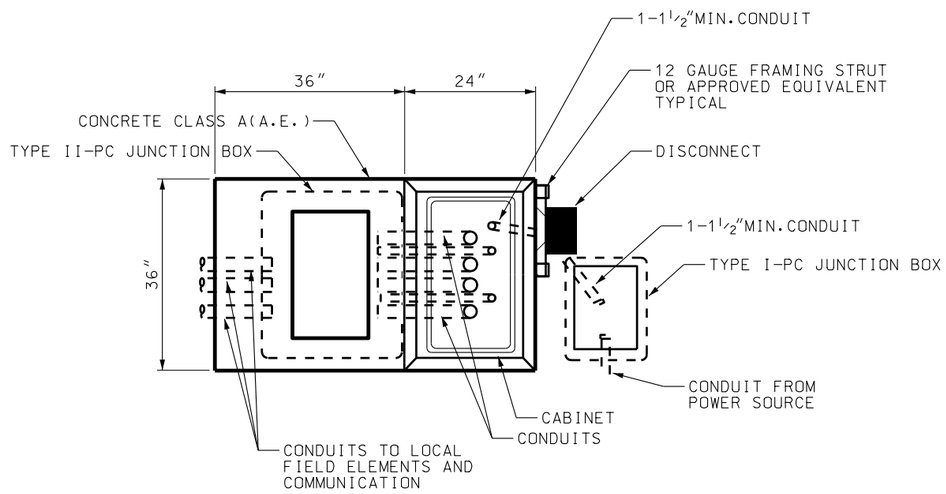

VMS CABINET - PLAN VIEW

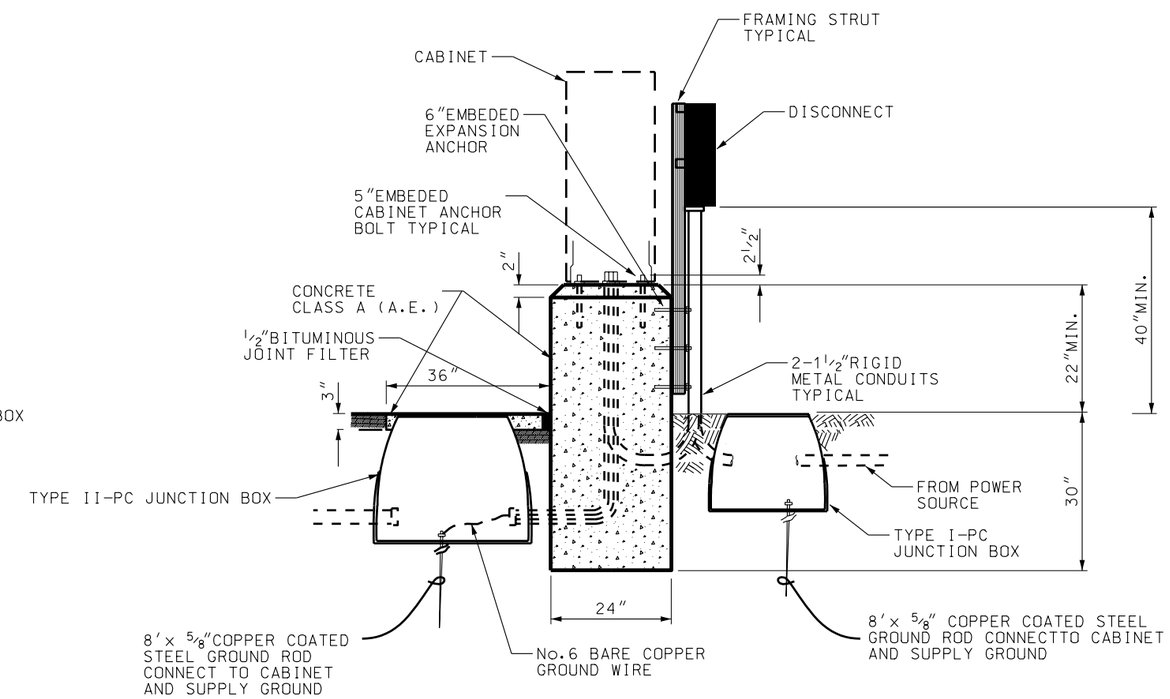

VMS CABINET - SIDE VIEW

VMS CABINET WITH 120V DISCONNECT

NO.	DATE	APPR.	REMARKS

REVISIONS

UTAH DEPARTMENT OF TRANSPORTATION
STANDARD DRAWINGS FOR ROAD AND BRIDGE CONSTRUCTION
SALT LAKE CITY, UTAH

RECOMMENDED FOR APPROVAL — JULY 03,2002 DATE
CHAIRMAN STANDARDS COMMITTEE APPROVED — JULY 03,2002 DATE
DEPUTY DIRECTOR

120V VMS CAB FOUNDATION DETAILS

STANDARD DRAWING TITLE

STD DWG
AT 13

NOTES:

1. REFER TO STD DWG SL3 FOR LOOP DETECTOR DETAILS.
2. MAINTAIN 6 inch MIN SPACING BETWEEN SAW CUT, AND ANY CONCRETE JOINTS. LOCATE ALL LEAD INS DOWN STREAM OF PIEZO.

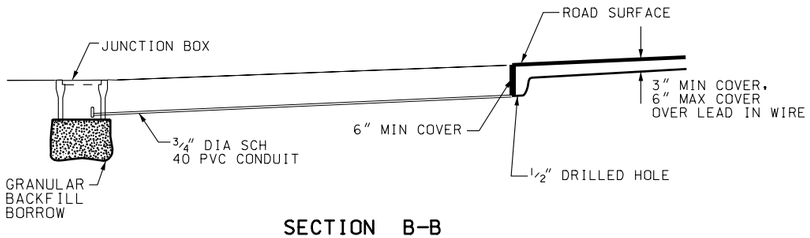

SECTION B-B

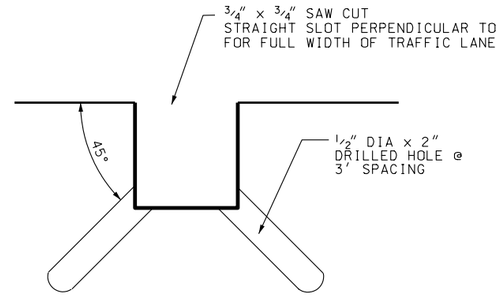

SAW CUT DETAIL

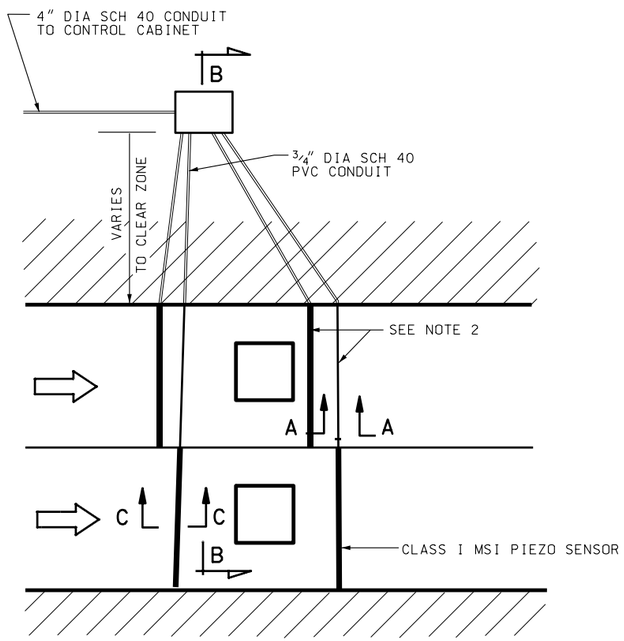

PLAN

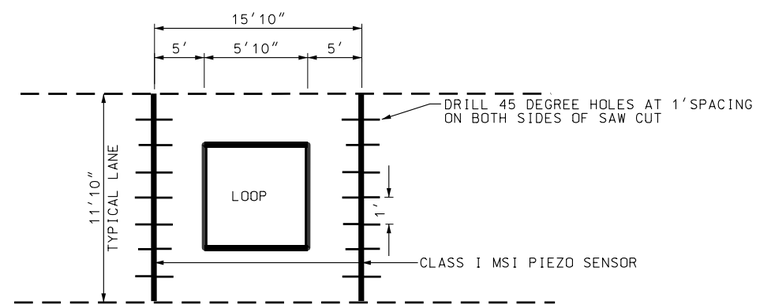

TYPICAL PIEZO DETAIL

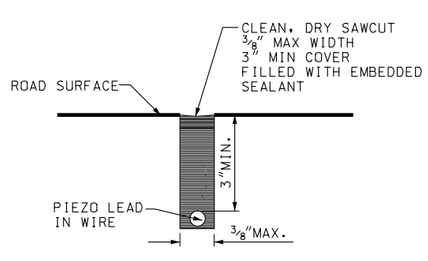

SECTION A-A

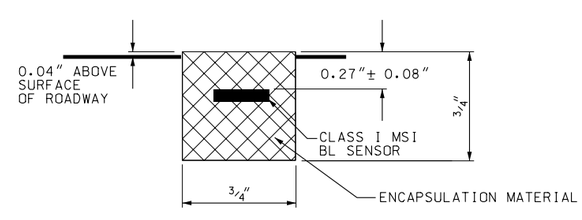

SECTION C-C

NO.	DATE	APPR.	REMARKS

REVISIONS

UTAH DEPARTMENT OF TRANSPORTATION
STANDARD DRAWINGS FOR ROAD AND BRIDGE CONSTRUCTION
SALT LAKE CITY, UTAH

RECOMMENDED FOR APPROVAL — JULY 03,2002 DATE

CHAIRMAN STANDARDS COMMITTEE APPROVED — JULY 03,2002 DATE

DEPUTY DIRECTOR

WEIGH IN MOTION PIEZO DETAIL

STANDARD DRAWING TITLE

STD DWG
AT 14

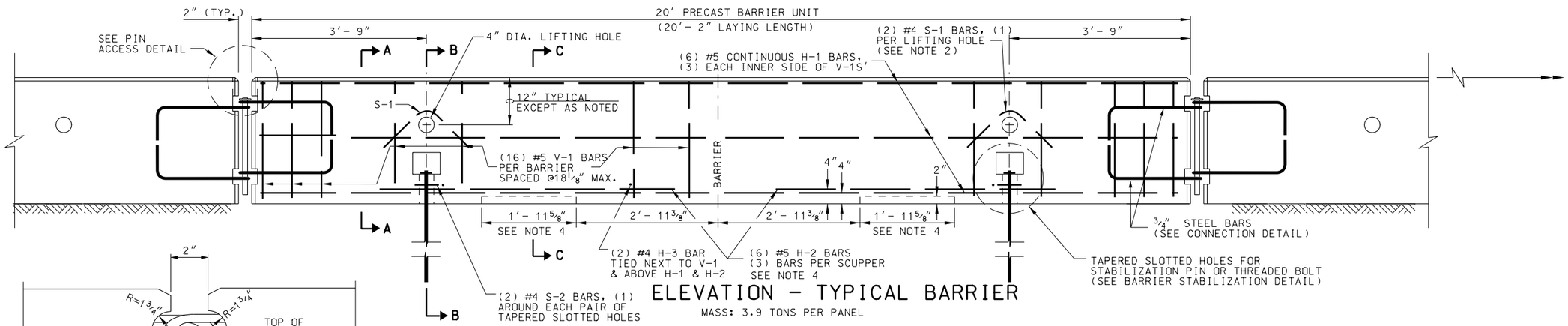

ELEVATION – TYPICAL BARRIER

MASS: 3.9 TONS PER PANEL

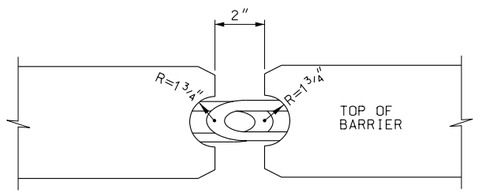

PIN ACCESS DETAIL

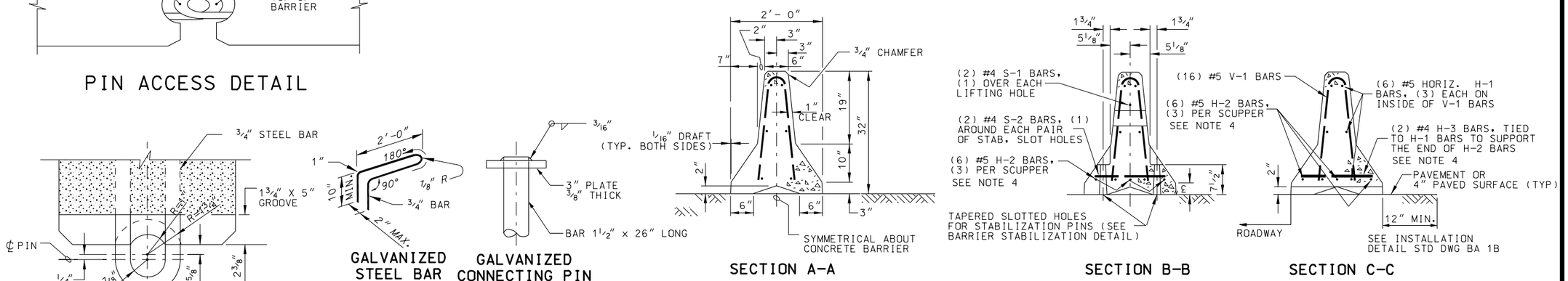

CONNECTION DETAILS

(SEE NOTE 1)

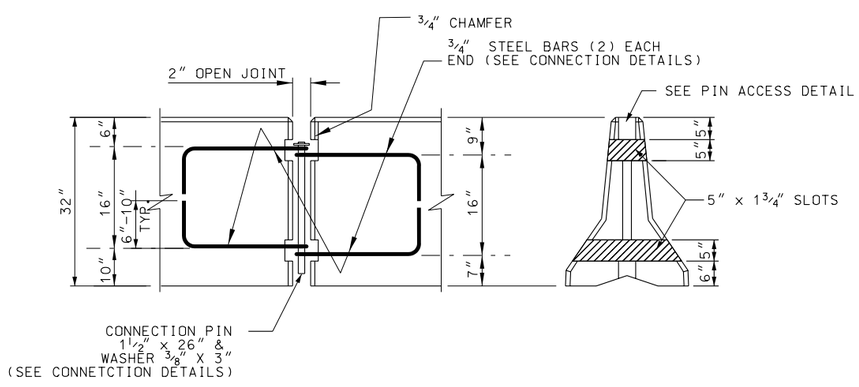

LOOP LOCATION

BARRIER SLOT DETAIL

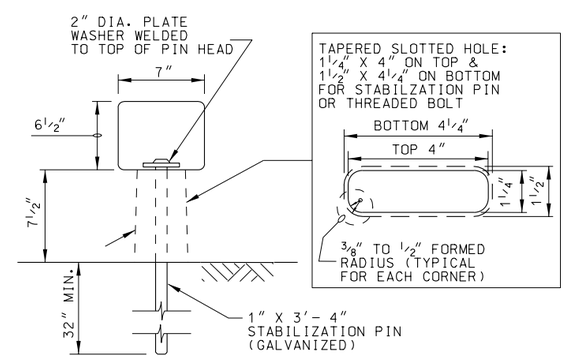

BARRIER STABILIZATION DETAIL

(SEE NOTE 3 ON STD DWG BA 1B)

NOTES:

1. USE ASTM A 36 STEEL FOR CONNECTION PIN, CONNECTION LOOPS, AND STABILIZATION PINS. A ONE PIECE PIN WITH A 3 inch ROUNDED TOP MAY BE USED IN PLACE OF THE DETAILED CONNECTION PIN IF THE ONE PIECE PIN MEETS ASTM A 36 REQUIREMENTS.
2. USE A 4 inch WHITE PVC SLEEVE TO FORM THE LIFTING HOLES. LEAVE SLEEVE IN PLACE AFTER CASTING.
3. PROVIDE A MINIMUM OF 12 inch OF PAVED SURFACE BEHIND BARRIER.
4. PROVIDE BLOCK OUT AND REINFORCING STEEL FOR SCUPPERS WHEN NOTED ON PLANS.
5. PLACE AN ADEQUATE AMOUNT OF SILICONE ADHESIVE ON BOTTOM OF WASHER BEFORE INSERTING PIN TO HOLD IN PLACE AND PREVENT EASY HAND REMOVAL.

NO.	DATE	APPR.	REMARKS

REVISIONS

UTAH DEPARTMENT OF TRANSPORTATION
STANDARD DRAWINGS FOR ROAD AND BRIDGE CONSTRUCTION
SALT LAKE CITY, UTAH

RECOMMENDED FOR APPROVAL — JULY 03,2002 DATE
CHAIRMAN STANDARDS COMMITTEE APPROVED — JULY 03,2002 DATE
DEPUTY DIRECTOR

PRECAST CONCRETE FULL BARRIER STANDARD SECTION

STANDARD DRAWING TITLE

STD DWG
BA 1A

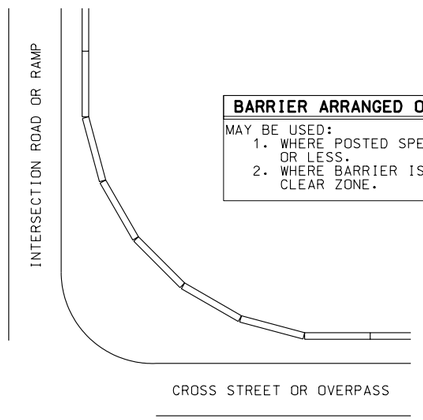

BARRIER ARRANGED ON A CURVE

MAY BE USED:
1. WHERE POSTED SPEED IS 35 MPH OR LESS.
2. WHERE BARRIER IS OUTSIDE THE CLEAR ZONE.

CURVED LAYOUT

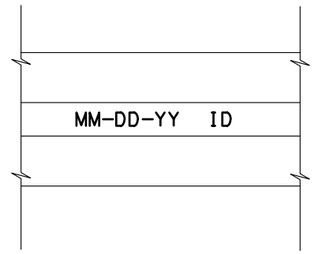

BARRIER MARKINGS

SEE NOTE 6

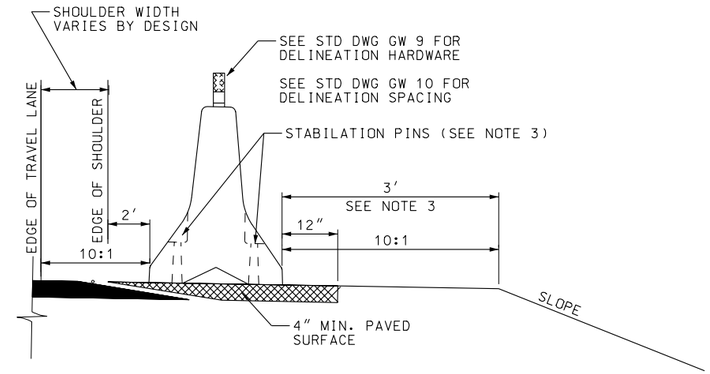

STANDARD INSTALLATION

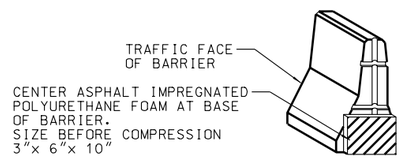

BARRIER SEAL

SEE NOTE 8

TABLE OF MAXIMUM TAPERS OUTSIDE SHY LINE

DESIGN SPEED(MPH)	TAPER
70	20:1
60	18:1
55	16:1
50	14:1
45	12:1
40	10:1
35	8:1

TABLE 1

SEE NOTE 1

TABLE OF MAXIMUM TAPERS INSIDE SHY LINE

DESIGN SPEED(MPH)	TAPER
70	30:1
60	26:1
55	24:1
50	21:1
45	18:1
40	16:1
35	13:1

TABLE 2

SEE NOTE 1

METAL REINFORCEMENT TABLE

MARK	LOCATION	BAR SIZE	(NO.BARS)	SKETCH
H-1	HORIZONTAL IN BARRIER TIED INSIDE V-1 BARS	#5	(6)	19'-3"
H-2	CENTERED ABOVE SCUPPERS LONG. & TRANSVERSELY	#5	(6)	6'-6"
H-3	TIED ABOVE H-1 BARS TO SUPPORT H-2, TIED TO V-1	#4	(2)	1'-6"
S-1	HORIZ. IN TOP OF WING WALL & IN FLOOR BACK WALL	#4	(2)	2'-5", 90°, 3 3/8"R, LIFTING HOLE
S-2	HORIZ. AROUND SLOTS BETWEEN V-I SCUPPERS	#4	(2)	1 1/2"R, SLOTS, 5'-1" BAR W/(4) 1 1/2"R BENDS & MIN. 1'-0" OVERLAP, 7", 1'-6", 1" MIN. CLEAR TO BAR
V-1	VERTICAL IN BARRIER(3) EACH END & (2) AT EACH SCUPPER	#5	(16)	TOTAL LENGTH 4'-9", 2 3/16"R, 12°, 9 1/2", 4 3/8", 2'-1 3/8"

NOTES:

1. USE APPROPRIATE TAPER RATE FOR BARRIER PLACEMENT FROM TABLE 1 OR TABLE 2.
2. PIN ALL BARRIER SECTION TOGETHER AT CONNECTION LOOPS.
3. THE CONCRETE BARRIER "STANDARD INSTALLATION" DESIGN ALLOWS FOR 3 feet OF OUTWARD LATERAL MOVEMENT IF THE BARRIER IS STRUCK. USE STABILIZATOR PINS WHEN BARRIER PLACEMENT REQUIREMENTS DO NOT ALLOW FOR 3 feet OUTWARD LATERAL MOVEMENT.
4. USE ASTM A 36 STEEL FOR CONNECTION PIN, CONNECTION LOOPS, AND STABILIZATION PINS.USE A ONE PIECE PIN WITH A 3 inch ROUNDED TOP PLACE OF THE CONNECTION PIN THE ONE PIECE PIN MEETS ASTM A 36 REQUIREMENTS.
5. USE A 4 inch WHITE PVC SLEEVE TO FORM THE LIFTING HOLES. LEAVE SLEEVE IN PLACE AFTER CASTING.
6. MARK EACH BARRIER WITH 2 inch NUMBERS INDICATING THE DATE OF CASTING AND IDENTIFICATION NUMBER SUPPLIED BY THE INSPECTOR, IMPRESSED 1/4inch DEEP INTO THE TOP CENTER OF THE BARRIER.
7. USE COATED REINFORCING STEEL EXCEPT AS NOTED.
8. DO NOT USE BARRIER SEAL WHEN SCUPPERS ARE PRESENT ON BARRIER.

REVISIONS

NO.	DATE	APPR.	REMARKS

UTAH DEPARTMENT OF TRANSPORTATION
STANDARD DRAWINGS FOR ROAD AND BRIDGE CONSTRUCTION
SALT LAKE CITY, UTAH

RECOMMENDED FOR APPROVAL — JULY 03,2002 DATE

CHAIRMAN STANDARDS COMMITTEE APPROVED — JULY 03,2002 DATE

DEPUTY DIRECTOR

PRECAST CONCRETE FULL BARRIER STANDARD SECTION

STANDARD DRAWING TITLE

STD DWG

BA 1B

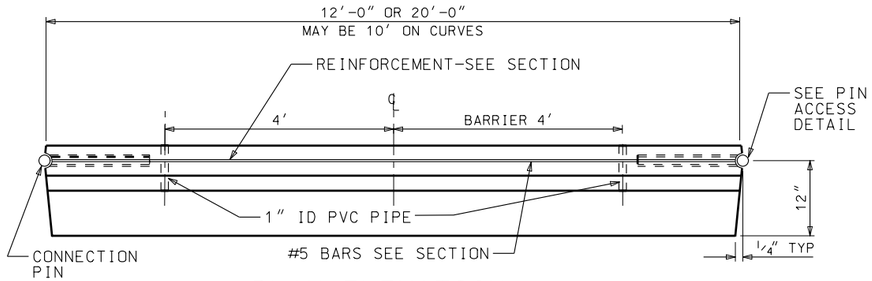

PLAN ELEVATION

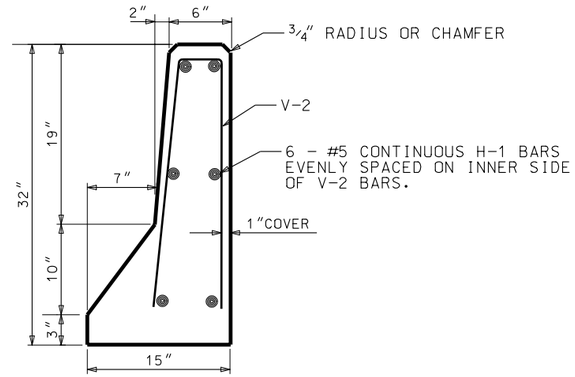

END ELEVATION

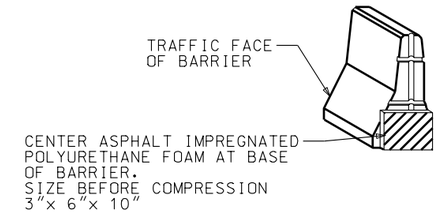

BARRIER SEAL

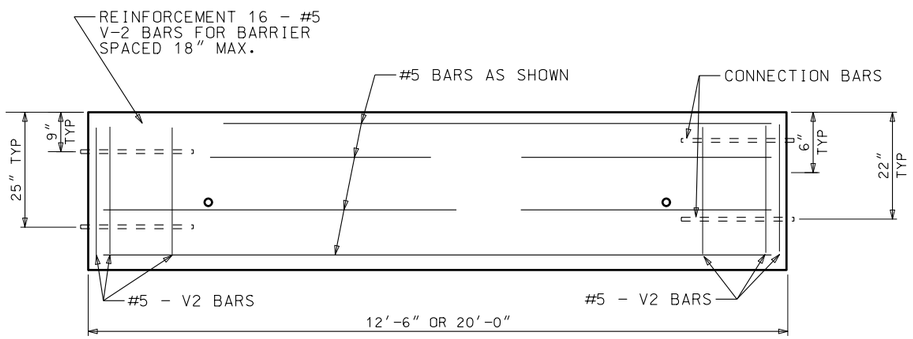

FRONT ELEVATION

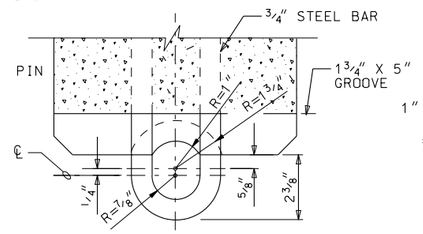

LOOP DETAIL

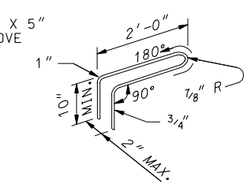

GALVANIZED STEEL BAR

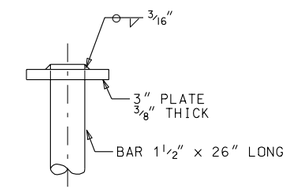

GALVANIZED CONNECTING PIN

CONNECTION DETAILS

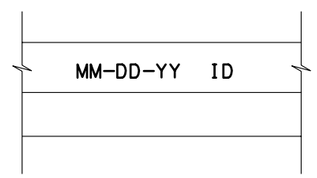

BARRIER MARKINGS

SEE NOTE 6

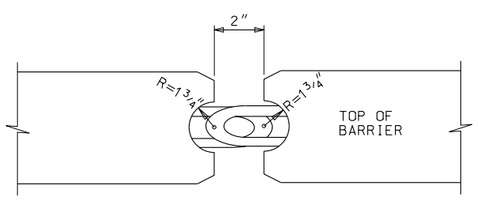

PIN ACCESS DETAIL

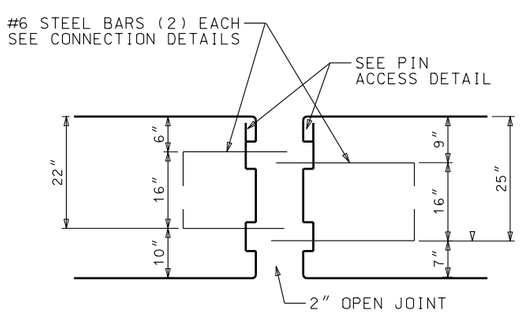

LOOP LOCATION ELEVATION

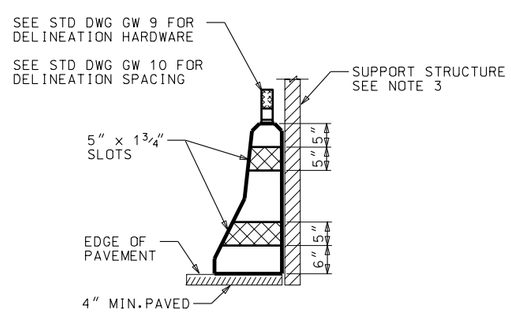

BARRIER SLOT DETAIL

METAL REINFORCEMENT TABLE

MARK	LOCATION	BAR SIZE	NO. BARS	SKETCH
H-1	HORIZONTAL IN BARRIER TIED INSIDE V-1 BARS	#5	6	19′-3″
V-2	VERTICAL IN BARRIER (3) EACH END	#5	16	TOTAL LENGTH 4′-9″; 2 3/8″R; 4 3/8″; 8″; 2′-1 3/8″; 6°

NOTES:

1. USE 3/4 inch RADIUS ON CHAMFER ON EXPOSED CONCRETE CORNER.
2. PLACE AN ADEQUATE AMOUNT OF SILICONE ADHESIVE ON BOTTOM OF WASHER BEFORE INSERTING PIN TO HOLD IN PLACE AND PREVENT EASY HAND REMOVAL.
3. PLACE PRECAST HALF BARRIER WHERE THERE IS A SUPPORT STRUCTURE BEHIND EACH SECTION (IE:SOUND WALL,MSE WALL)
4. DO NOT USE PRECAST HALF BARRIER AS AN ALTERNATE, OR IN CONJUNCTION WITH PRECAST CONCRETE FULL BARRIER SECTION IN A WORK ZONE.
5. USE COATED REINFORCING STEEL EXCEPT AS NOTED.
6. MARK EACH BARRIER WITH 2 inch NUMBERS INDICATE THE DATE OF CASTING AND IDENTIFICATION NUMBER SUPPLIED BY THE INSPECTOR, IMPRESSED 1/4 inch DEEP INTO THE TOP CENTER OF THE BARRIER.

REVISIONS

NO.	DATE	APPR.	REMARKS

UTAH DEPARTMENT OF TRANSPORTATION
STANDARD DRAWINGS FOR ROAD AND BRIDGE CONSTRUCTION
SALT LAKE CITY, UTAH

RECOMMENDED FOR APPROVAL — JULY 03,2002 DATE

CHAIRMAN STANDARDS COMMITTEE APPROVED — JULY 03,2002 DATE

DEPUTY DIRECTOR

PRECAST CONCRETE HALF BARRIER STANDARD SECTION

STANDARD DRAWING TITLE

STD DWG
BA 2

REINFORCING DETAILS

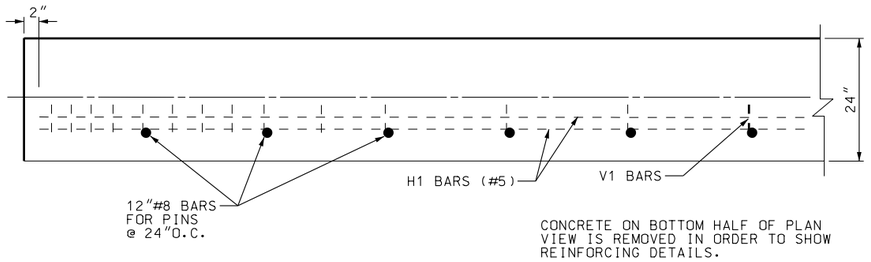

PLAN VIEW
(SYMMETRICAL ABOUT CENTER LINE)

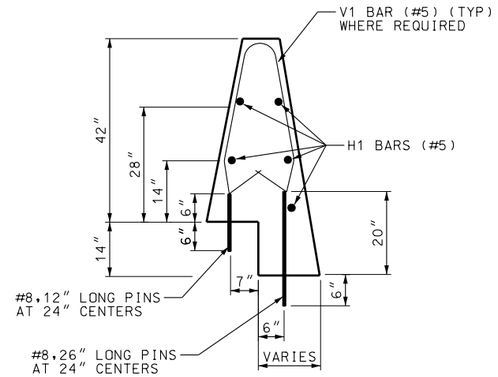

SECTION A-A
(STEPPED PAVEMENT)

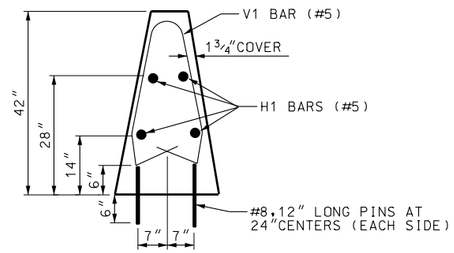

SECTION A-A

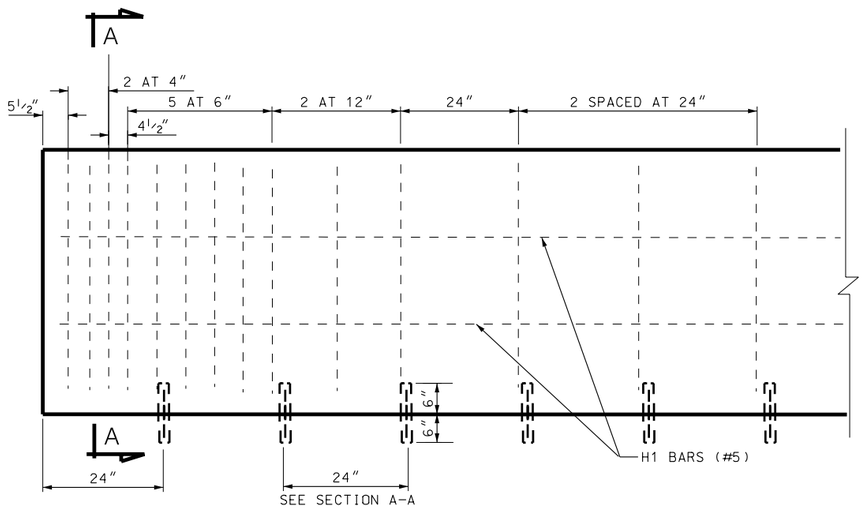

ELEVATION

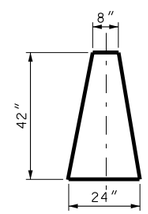

TYPICAL SECTION

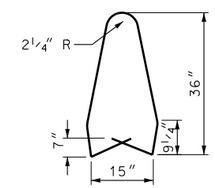

V1 BAR (#5)

DELINEATION HARDWARE AND SPACING

SEE NOTE 8

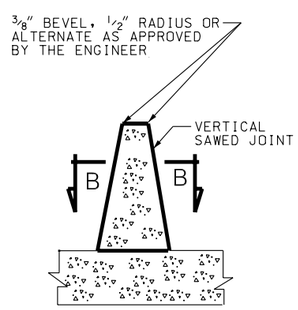

SECTION THROUGH SAWED JOINT

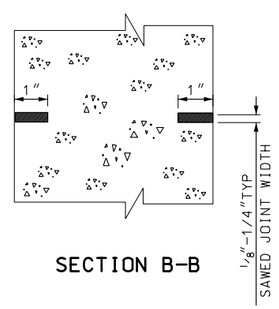

SECTION B-B

NOTES:

1. METHODS DEVISED BY THE CONTRACTOR AND APPROVED BY THE ENGINEER ASSURING THE LONGITUDINAL ROADWAY STEEL IS POSITIONED, +/- 1/2 inch AS DIMENSIONED IS SATISFACTORY.
2. THE CONTRACTOR CAN SLIP FORM THE BARRIER, IN WHICH CASE TYING ADDITIONAL REINFORCEMENT TO THE UPPER TWO THIRDS OF THE REINFORCING CAGE PROVIDES BRACING.
3. DO NOT USE BARRIER TO SUPPORT HIGHWAY LIGHTING POLES.
4. DO NOT USE BARRIER FOR BRIDGE ROADWAY APPLICATIONS.
5. SAW JOINTS AT PAVEMENT TRANSVERSE JOINTS.
6. USE COATED DEFORMED BILLET-STEEL BARS CONFORMING TO AASHTO M 284, OR M 111 AND M 31M GRADE 400.
7. USE CLASS AA(AE) CONCRETE WHERE SPECIFIED OTHERWISE.
8. SEE STD DWG GW 9 FOR DELINEATION HARDWARE AND STD DWG GW 10 FOR DELINEATION SPACING.

REVISIONS

NO.	DATE	APPR.	REMARKS

UTAH DEPARTMENT OF TRANSPORTATION
STANDARD DRAWINGS FOR ROAD AND BRIDGE CONSTRUCTION
SALT LAKE CITY, UTAH

RECOMMENDED FOR APPROVAL — JULY 03,2002 DATE

CHAIRMAN STANDARDS COMMITTEE APPROVED — JULY 03,2002 DATE

DEPUTY DIRECTOR

STANDARD DRAWING TITLE

CAST IN PLACE CONSTANT SLOPE BARRIER

STD DWG

BA 3

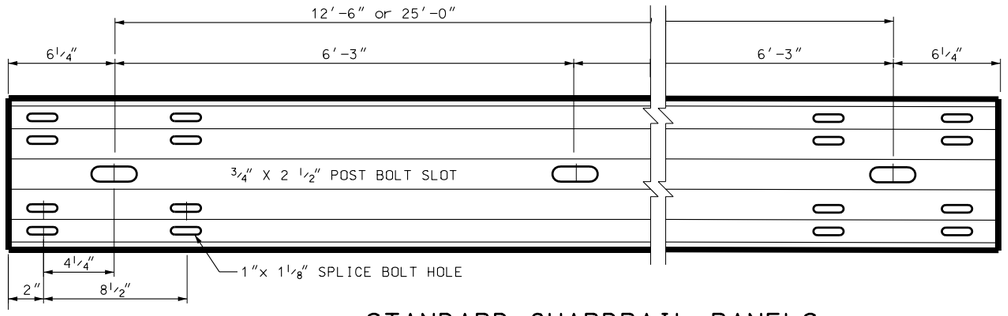

STANDARD GUARDRAIL PANELS

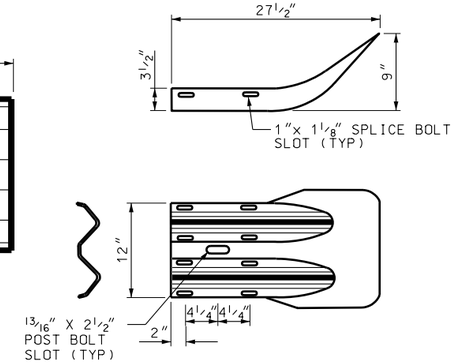

END SECTION (FLARED)

USE END SECTION (FLARED) WHEN TRAILING END IS OUTSIDE OPPOSING TRAFFIC CLEAR ZONE.

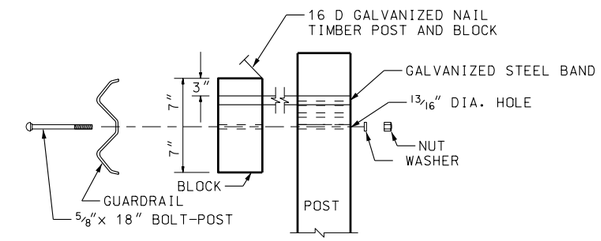

WOOD POST TO RAIL TYPICAL

USE BOTTOM HOLE FOR INTIAL INSTALLATION

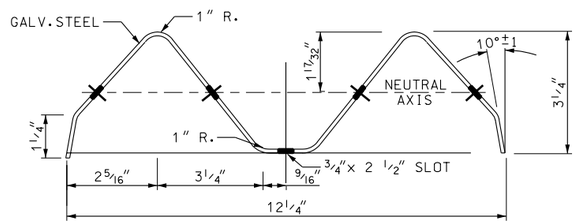

SECTION THRU RAIL ELEMENT

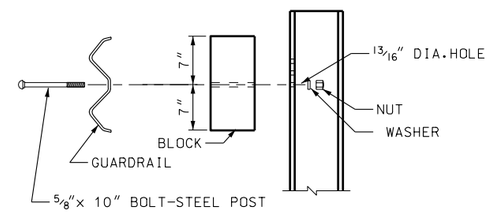

STEEL POST TO RAIL TYPICAL

USE BOTTOM HOLE FOR INTIAL INSTALLATION

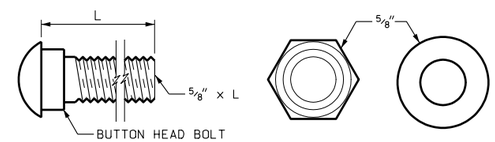

GALVANIZED BOLTS, NUTS, WASHERS

	L
SPLICE BOLTS (WASHER NOT REQ'D.)	1¼″
STEEL BOLT W/ WOOD BLOCK	10″
WOOD POST W/ WOOD BLOCK	18″
WOOD POST W/WOOD BLOCK (MEDIAN)	25″

NOTES:

1. SEE INSTALLATION DETAIL STD DWG BA 4B FOR POST LENGTH REQUIREMENTS.
2. 84 inch POST MARKING: WOOD POST, BRAND POST WITH 1½ inch x 2 inch MARKING L84, STEEL POST STAMP POST WITH 1½ inch x 2 inch MARKING L84.
3. DO NOT USE WASHERS ON RAIL SPLICE CONNECTION.
4. A COMPOSITE OR PLASTIC BLOCK CAN BE SUBSTITUTED FOR THE NOTCHED WOOD BLOCK ON STEEL POST INSTALLATION. NCHRP-350 COMPLIANCE REQUIRED.

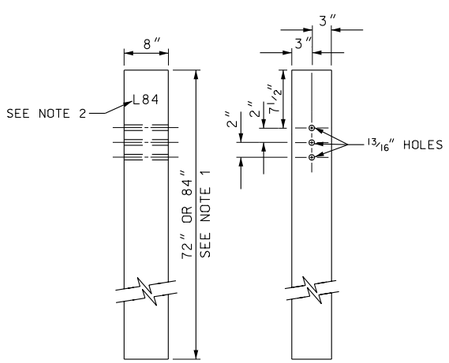

SIDE FRONT

6″ X 8″ WOOD POST

(SEE NOTE 1)

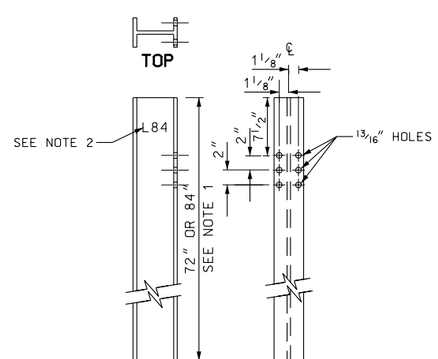

SIDE FRONT

W6 X 8.5 STEEL POST

(SEE NOTE 1)

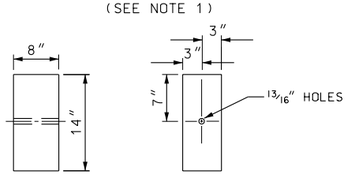

SIDE FRONT

6″ X 8″ WOOD BLOCK

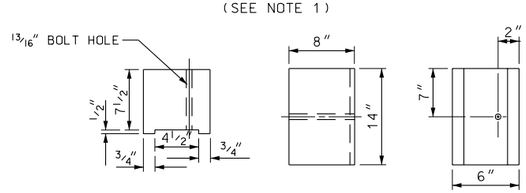

TOP SIDE FRONT

6″ X 8″ NOTCHED WOOD BLOCK

(SEE NOTE 3)

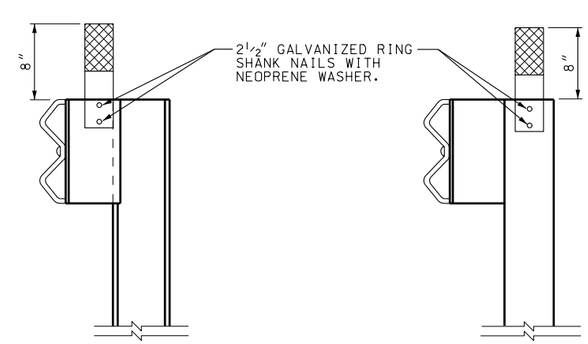

DELINEATOR DETAIL

STEEL POST W/WOOD OR COMPOSITE BLOCK

SEE STD DWG GW 9 FOR HARDWARE AND GW 10 FOR PLACEMENT

DELINEATOR DETAIL

WOOD POST W/ WOOD BLOCK

SEE STD DWG GW 9 FOR HARDWARE AND GW 10 FOR PLACEMENT

REVISIONS

NO.	DATE	APPR.	REMARKS

UTAH DEPARTMENT OF TRANSPORTATION
STANDARD DRAWINGS FOR ROAD AND BRIDGE CONSTRUCTION
SALT LAKE CITY, UTAH

RECOMMENDED FOR APPROVAL — JULY 03,2002 DATE

CHAIRMAN STANDARDS COMMITTEE APPROVED — JULY 03,2002 DATE

DEPUTY DIRECTOR

BEAM GUARDRAIL HARDWARE

STANDARD DRAWING TITLE

STD DWG BA 4

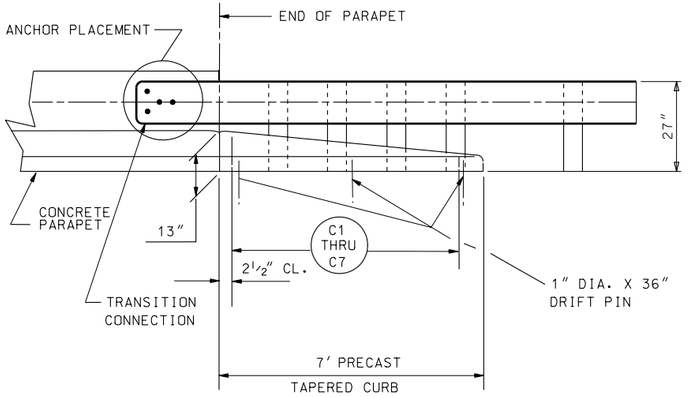

ELEVATION

(RIGHT SIDE SHOWN LEFT SIDE SIMILAR)

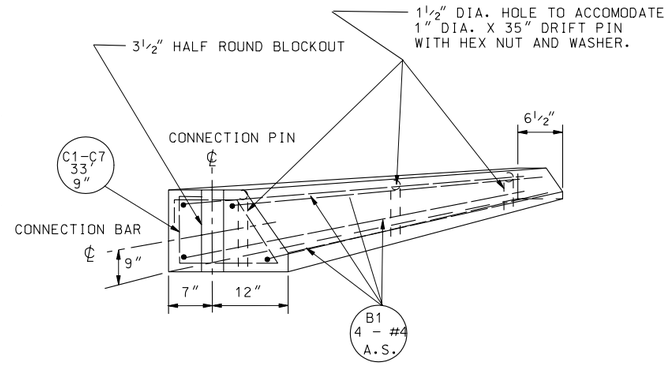

REBAR PLACEMENT

FOR PRECAST CONCRETE TAPERED CURB SECTION

REINFORCING STEEL SCHEDULE

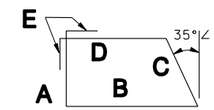

TYPE I

(FOR 1 SECTION ONLY)

BENT BARS

(ALL DIMENSIONS ARE OUT TO OUT)

MARK	SIZE	NO.	TYPE	LENGTH	A	B	C	D	E
C1	#3	1	1	4'2"	9"	14½"	11"	9"	3½"
C2				3'10"	8"	13½"	10"	8"	
C3				3'6½"	7"	12½"	9"	8"	
C4				3'2"	6"	11"	8"	7"	
C5				2'11"	5½"	10"	6½"	6"	
C6				2'6½"	4½"	8½"	5½"	5"	
C7	#3	1	1	2'4"	4½"	8"	5"	5"	3½"

NOTE: ALL REINFORCING BARS TO HAVE 1½" MINIMUM COVER.

STRAIGHT BARS

MARK	SIZE	NO.	LENGTH	
B1	#4	4	6'9"	
B2	#4	2	8"	

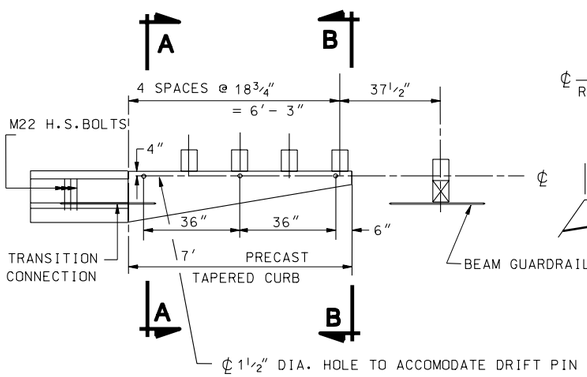

PLAN

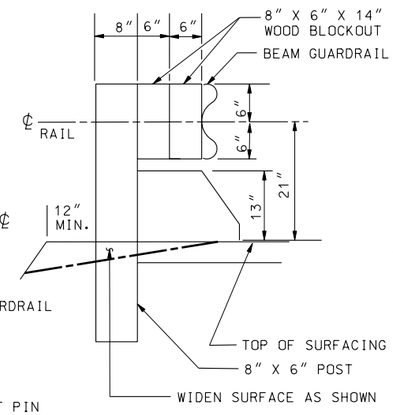

SECTION A-A

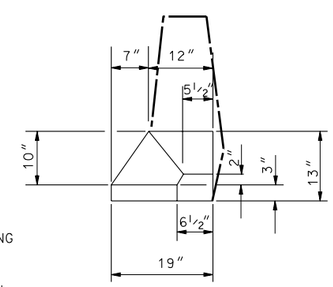

SECTION B-B

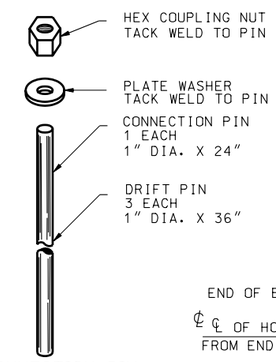

CONNECTION PIN & DRIFT PIN

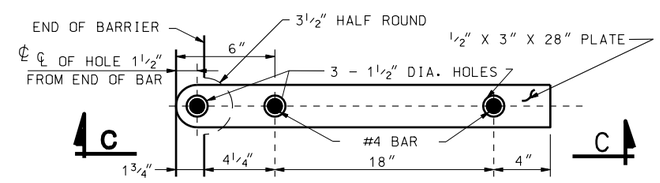

CONNECTION BAR

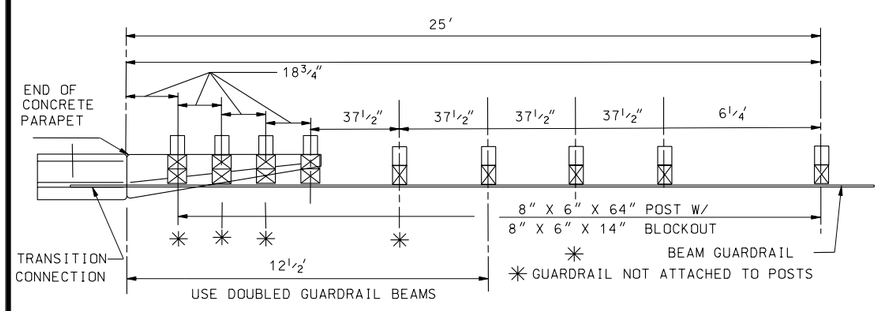

POST PLACEMENT

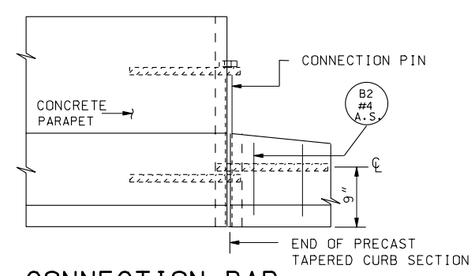

CONNECTION BAR PLACEMENT DETAIL

SECTION C-C

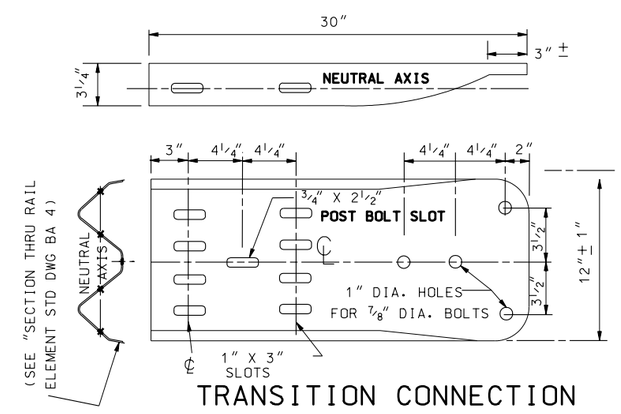

TRANSITION CONNECTION

REVISIONS

NO.	DATE	APPR.	REMARKS

UTAH DEPARTMENT OF TRANSPORTATION

STANDARD DRAWINGS FOR ROAD AND BRIDGE CONSTRUCTION

SALT LAKE CITY, UTAH

RECOMMENDED FOR APPROVAL — JULY 03,2002 DATE

CHAIRMAN STANDARDS COMMITTEE APPROVED — JULY 03,2002 DATE

DEPUTY DIRECTOR

GUARDRAIL TRANSITION

STANDARD DRAWING TITLE

STD DWG

BA 4A

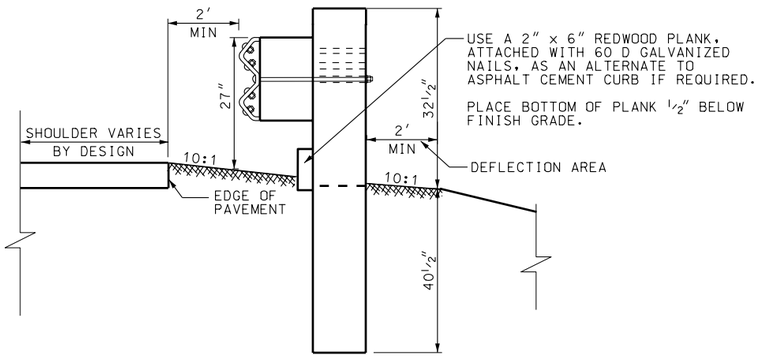

INITIAL INSTALLATION

USE 72inch LONG POSTS

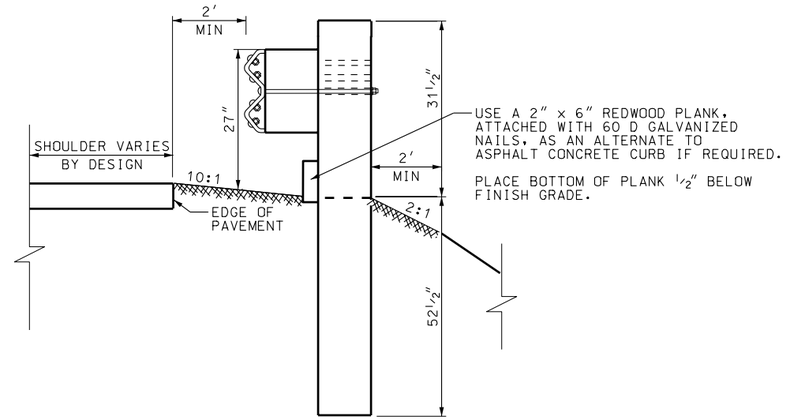

INITIAL LONG POST INSTALLATION

USE 84inch LONG POSTS

USE THIS INSTALLATION WHEN THE MINIMUM 2 FOOT DEFLECTION AREA BEHIND RAIL CANNOT BE PROVIDED.

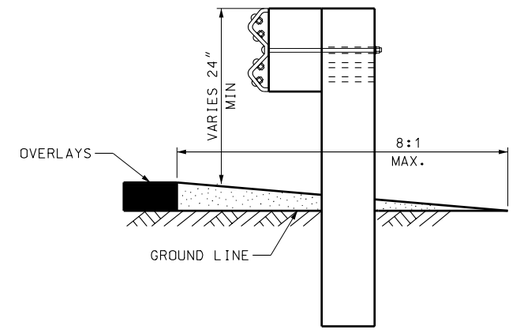

RAIL ELEMENT RAISED

RAISE RAIL ELEMENT WHEN OVERLAY IS REQUIRED.

RAISED RAIL ELEMENT WILL ACCOMMODATE 6 TO 8 INCHES OF OVERLAY MATERIAL.

SLOPE OF SHOULDER INTO FACE OF RAIL NOT TO EXCEED 8:1.

RAISE REDWOOD PLANKING WHEN REQUIRED.

RAISING THE RAIL ELEMENT TO MAXIMUM HEIGHT REQUIRED BEFORE THE MINIMUM HEIGHT OF THE RAIL ELEMENT ABOVE GROUND LEVEL CAN BE REDUCED TO THE MINIMUM OF 24 INCHES.

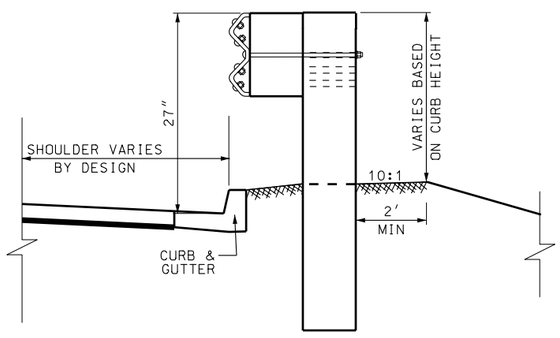

INSTALLATION W/CURB & GUTTER

USE 72 inch LONG POSTS

PLACE TOP FACE OF CURB EVEN WITH OR BEHIND FACE OF RAIL ELEMENT

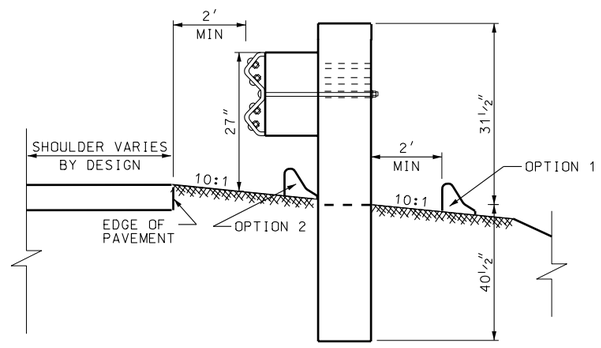

INSTALLATION W/ASPHALT CONCRETE CURB

USE 72inch LONG POSTS

OPTION 1: PREFERED INSTALLATION.

OPTION 2: PLACE FACE OF ASPHALT CONCRETE CURB EVEN WITH FACE OF RAIL OR BEHIND FACE OF RAIL.

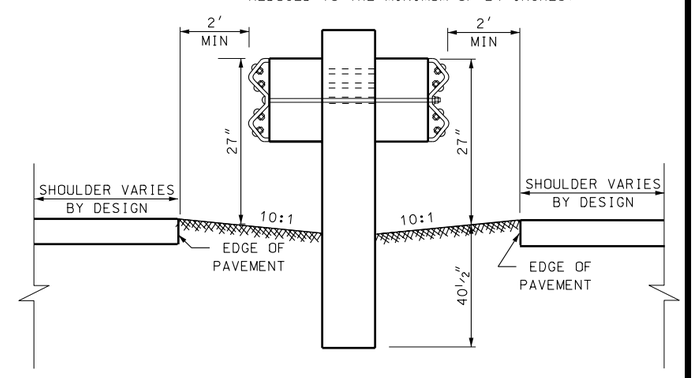

MEDIAN BARRIER

RAISE BOTH RAIL ELEMENTS AS PER RAISE ELEMENT DETAIL WHEN REQUIRED.

ATTACH REQUIRED DELINETION ON THE POST.

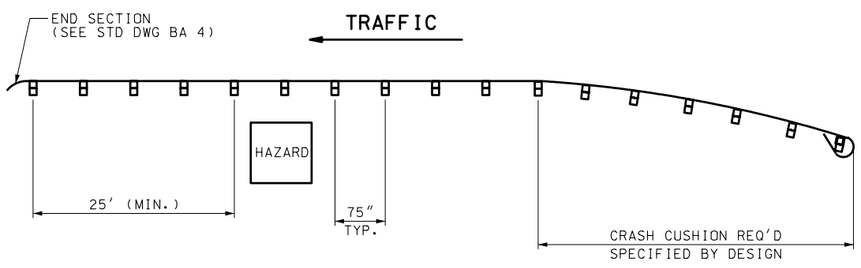

TYPICAL POST SPACING

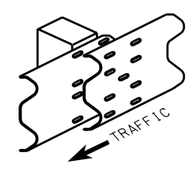

SPLICE LAP DETAIL

NO.	DATE	APPR.	REMARKS

REVISIONS

UTAH DEPARTMENT OF TRANSPORTATION
STANDARD DRAWINGS FOR ROAD AND BRIDGE CONSTRUCTION
SALT LAKE CITY, UTAH

RECOMMENDED FOR APPROVAL — JULY 03,2002 DATE

CHAIRMAN STANDARDS COMMITTEE APPROVED — JULY 03,2002 DATE

DEPUTY DIRECTOR

BEAM GUARDRAIL INSTALLATIONS

STANDARD DRAWING TITLE

STD DWG

BA 4B

TRAFFIC CONTROL CABLE

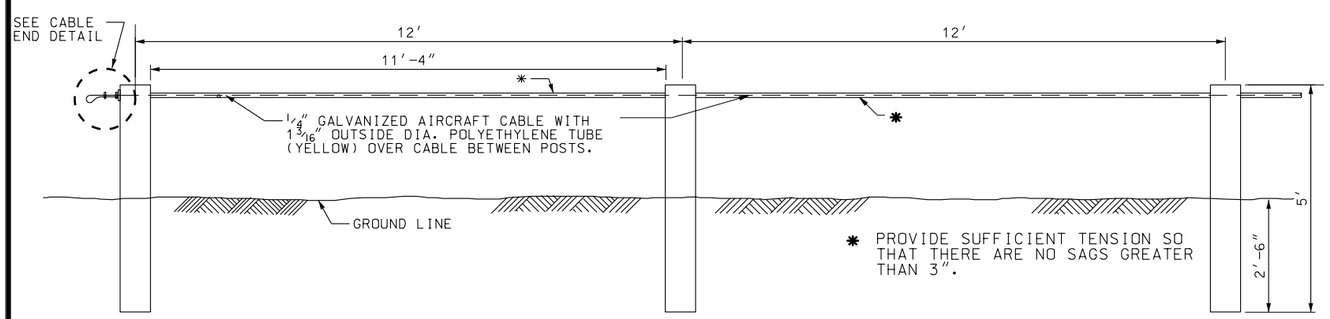

ELEVATION VIEW

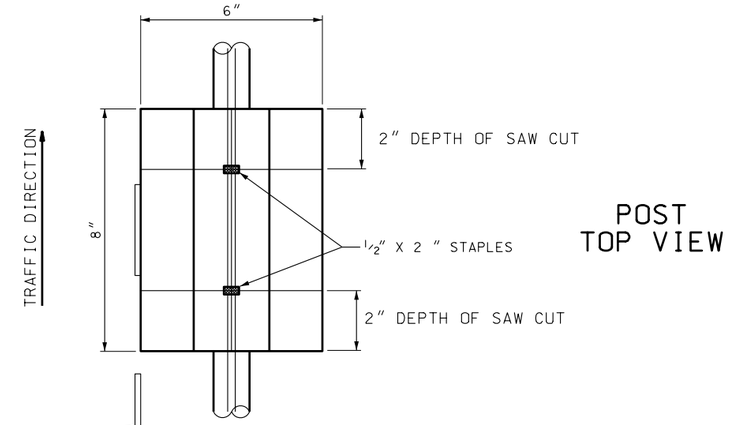

POST TOP VIEW

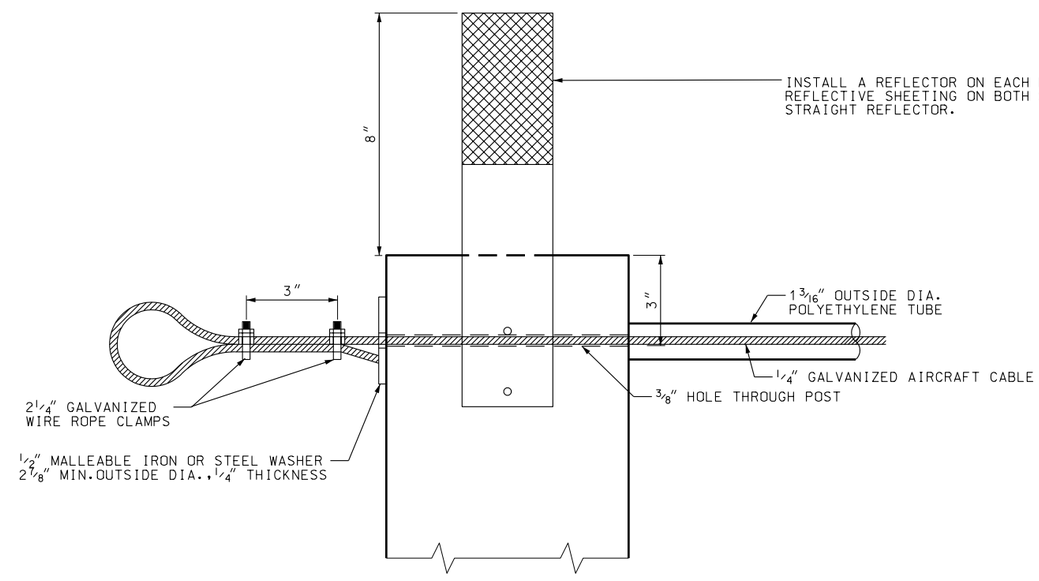

CABLE END DETAIL

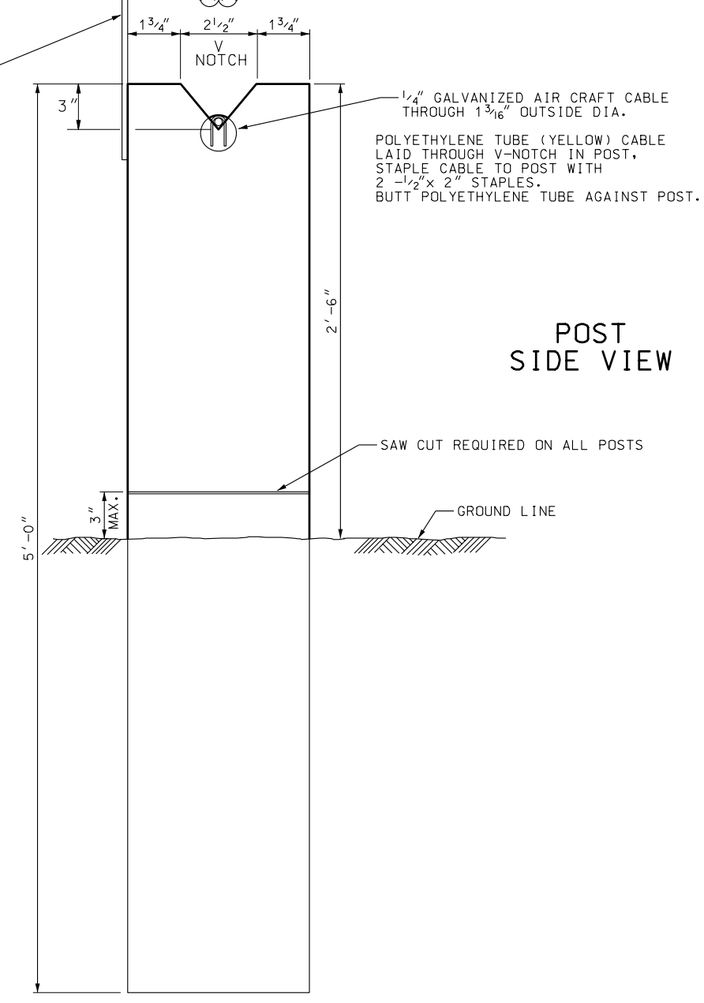

POST SIDE VIEW

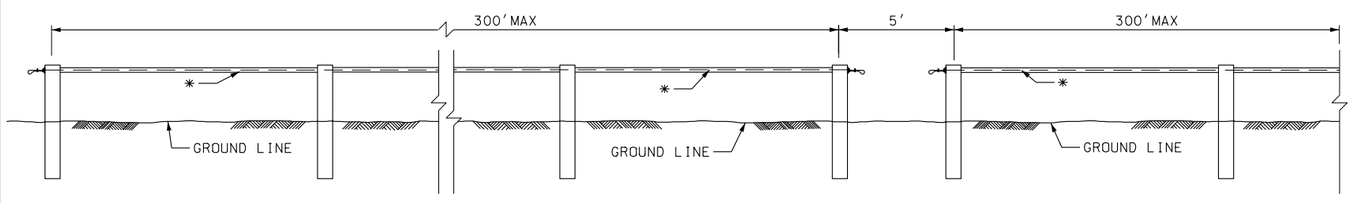

SECTION LENGTH DETAIL

* PROVIDE SUFFICIENT TENSION SO THAT THERE ARE NO SAGS GREATER THAN 3 INCHES.

REVISIONS			
NO.	DATE	APPR.	REMARKS

UTAH DEPARTMENT OF TRANSPORTATION
STANDARD DRAWINGS FOR ROAD AND BRIDGE CONSTRUCTION
SALT LAKE CITY, UTAH

RECOMMENDED FOR APPROVAL — JULY 03,2002 DATE

CHAIRMAN STANDARDS COMMITTEE APPROVED — JULY 03,2002 DATE

DEPUTY DIRECTOR

STANDARD DRAWING TITLE: TRAFFIC CONTROL CABLE

STD DWG
BA 5

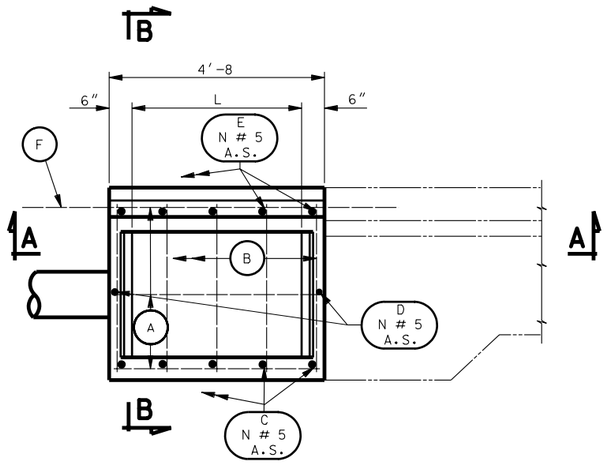

PLAN VIEW

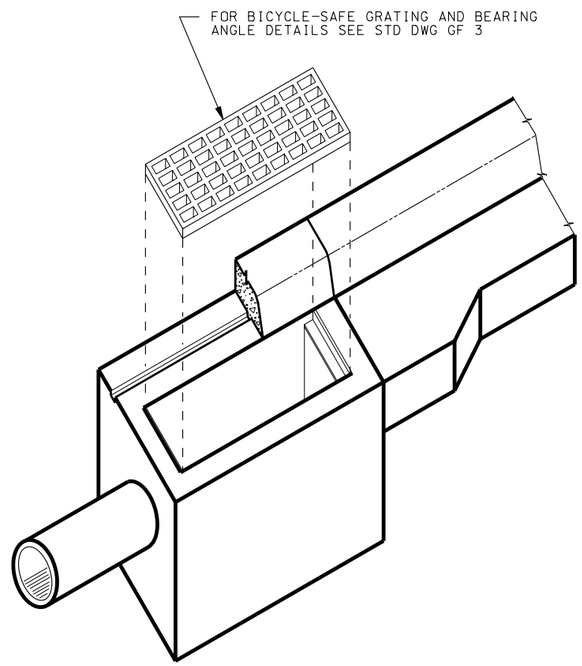

ISOMETRIC VIEW

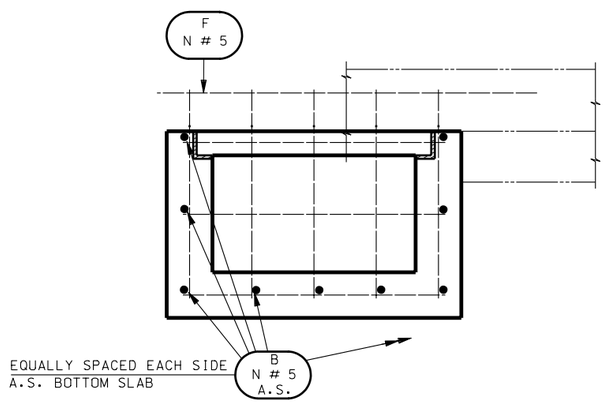

SECTION A-A

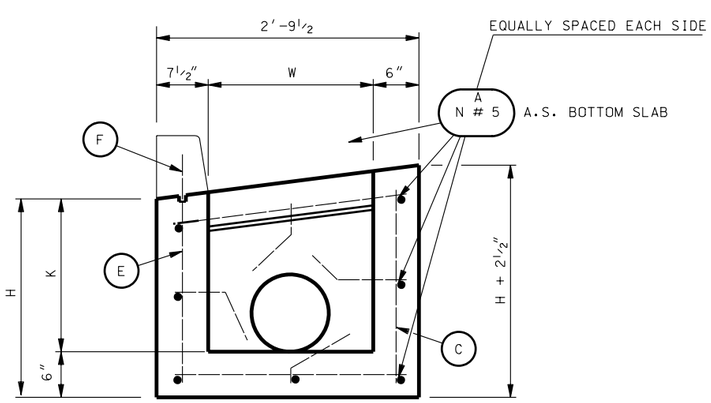

SECTION B-B

NOTES:

1. USE COATED DEFORMED BILLET REINFORCING STEEL BARS CONFORMING TO AASHTO M 284 OR M 111 AND M 31 GRADE 60 RESPECTIVELY.
2. USE STRUCTURAL STEEL CONFRONTING TO AASHTO M 270 GRADE 36 EXCEPT WHERE NOTED OTHERWISE.
3. FOR GRATING AND BEARING DETAILS SEE STD DWG GF 3.
4. USE CLASS AA(AE) CAST-IN-PLACE CONCRETE EXCEPT WHERE SPECIFIED OTHERWISE.
5. USE TYPE II CEMENT (LOW ALKALI) UNLESS SPECIFIED OTHERWISE IN SPECIAL PROVISIONS.
6. CHAMFER ALL EXPOSED CONCRETE CORNERS ¾" EXCEPT WHERE NOTED OTHERWISE.
7. PROVIDE 2" CONCRETE COVER TO REINFORCING STEEL EXCEPT WHERE NOTED OTHERWISE.
8. INCLUDE CONCRETE QUANTITIES FOR CURB & GUTTER IN ROADWAY QUANTITIES.
9. DEDUCT CONCRETE DISPLACED BY PIPE(S) (TABLE"A") FROM CONCRETE QUANTITIES GIVEN IN SCHEDULE OF INSTALLATION.
10. CUT AND BEND REINFORCING STEEL AS NECESSARY TO CLEAR PIPE(S) AND MAINTAIN 2" CLEARANCE.
11. FOR LOCATION AND SIZE OF PIPE(S) SEE ROADWAY PLANS.
12. QUANTITIES IN TABLE "A" ARE FOR PIPE THROUGH 6" WALL THICKNESS.

DESIGN DATA

HS-20-44 OR INTERSTATE ALTERNATE MILITARY LOADING IN ACCORDANCE WITH AASHTO AND INTERIM SPECIFICATIONS.

STRUCTURAL CONCRETE: Fc = 1,400 psi REINF. STEEL: Fs = 24,000 psi
STRUCTURAL STEEL: Fs = 20,000 psi n = 8

QUANTITIES

SEE SCHEDULE OF INSTALLATION

SCHEDULE OF INSTALLATION

LINE NO	DIMENSIONS				MAX. PIPE DIA.		REINFORCING STEEL												QUANTITIES	
							A		B		C		D		E		F		REINF. STEEL	CONC.
	H	W	L	K	R.C.P.	C.M.P.	N	LENGTH	N	LENGTH	N	LENGTH	N	LENGTH	N	LENGTH	N	LENGTH	lbs.	Cu.Yds.
1	2'-0	1'-8	3'-8	1'-6	——	15"	7	4'-4	9	2'-5	5	1'-9	2	1'-8	5	2'-0	1	7'-0	84.7	0.65
2	2'-6	1'-8	3'-8	2'-0	12"	18"	9	4'-4	11	2'-5	5	2'-3	2	2'-2	5	2'-6	1	7'-0	105.0	0.79
3	3'-0	1'-8	3'-8	2'-6	15"	18"	9	4'-4	11	2'-5	5	2'-9	2	2'-8	5	3'-0	1	7'-0	111.3	0.93
4	3'-6	1'-8	3'-8	3'-0	15"	18"	11	4'-4	13	2'-5	5	3'-3	2	3'-2	5	3'-6	1	7'-0	131.6	1.07
5	4'-0	1'-8	3'-8	3'-6	15"	18"	11	4'-4	13	2'-5	5	3'-9	2	3'-8	5	4'-0	1	7'-0	137.9	1.21
6	4'-6	1'-8	3'-8	4'-0	15"	18"	13	4'-4	15	2'-5	5	4'-3	2	4'-2	5	4'-6	1	7'-0	158.2	1.35
7	5'-0	1'-8	3'-8	4'-6	15"	18"	13	4'-4	15	2'-5	5	4'-9	2	4'-8	5	5'-0	1	7'-0	164.5	1.49

TABLE "A"

R.C.P.		C.M.P.	
DIA.	CU. YD.	DIA.	CU. YD.
12"	.017	12"	.015
15"	.037	15"	.023
		18"	.033

REVISIONS

NO.	DATE	APPR.	REMARKS

UTAH DEPARTMENT OF TRANSPORTATION
STANDARD DRAWINGS FOR ROAD AND BRIDGE CONSTRUCTION
SALT LAKE CITY, UTAH

RECOMMENDED FOR APPROVAL — JULY 03,2002 DATE

CHAIRMAN STANDARDS COMMITTEE APPROVED — JULY 03,2002 DATE

DEPUTY DIRECTOR

STANDARD DRAWING TITLE
STANDARD
CACH BASIN

STD DWG
CB 1

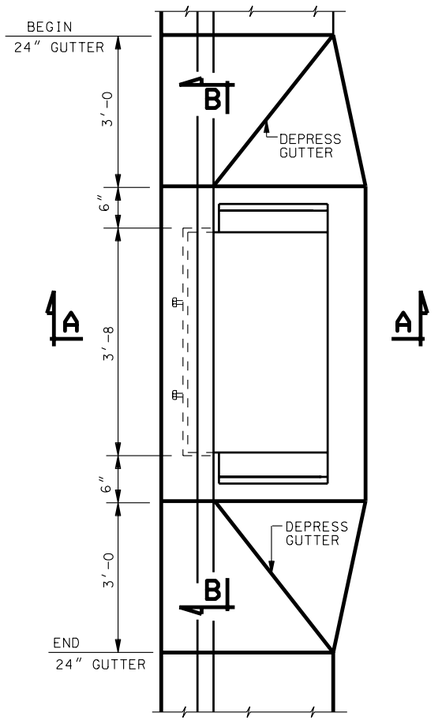

PLAN

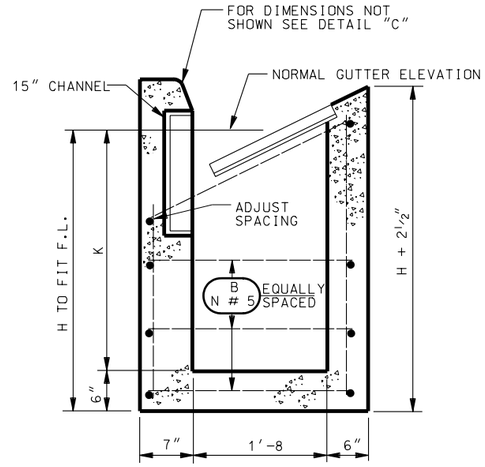

SECTION A-A

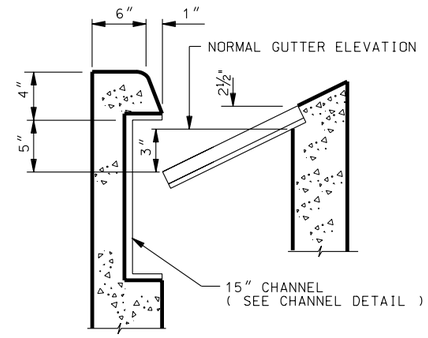

DETAIL "C"

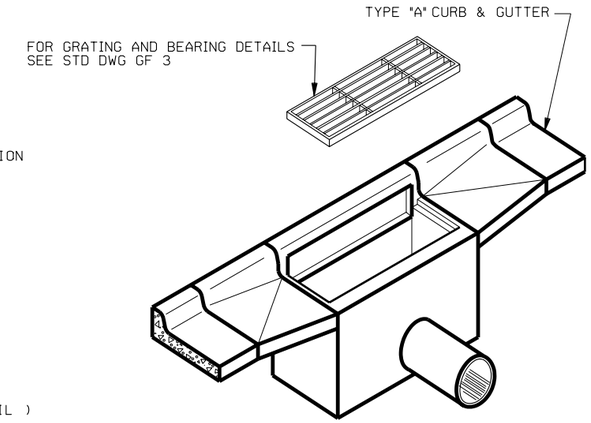

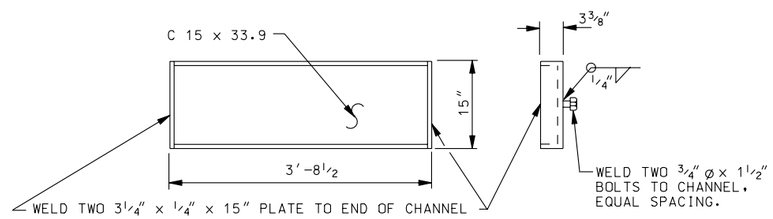

CHANNEL DETAIL

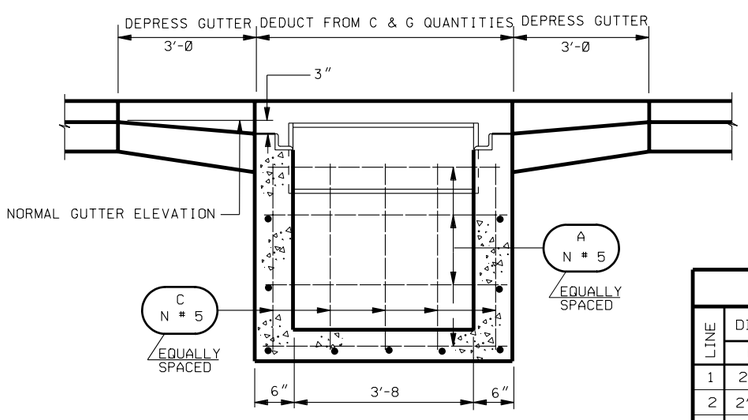

SECTION B-B

TABLE "A"

R.C.P.		C.M.P.	
DIA.	CU. YDS.	DIA.	CU. YDS.
12"	.024	12"	.015
15"	.036	15"	.023
		18"	.033

NOTE: QUANTITIES IN TABLE "A" ARE FOR PIPE THROUGH 6" WALL.

SCHEDULE OF INSTALLATION

LINE	DIMENSIONS		MAXIMUM PIPE DIA.		REINFORCING STEEL						REIN. STEEL	CONC.
					A		B		C			
	H	K	RCP	CMP	N	LENGTH	N	LENGTH	N	LENGTH	LBS.	CU. YDS
1	2'-0	1'-0	——	15"	7	4'-4	9	2'-5	12	1'-9	76.2	0.63
2	2'-6	2'-0	12"	18"	9	4'-4	11	2'-5	12	2'-3	96.6	0.75
3	3'-0	2'-6	15"	↑	9	4'-4	11	2'-5	12	2'-9	102.8	0.88
4	3'-6	3'-0	↑		11	4'-4	13	2'-5	12	3'-3	123.2	1.00
5	4'-0	3'-6			11	4'-4	13	2'-5	12	3'-9	129.4	1.13
6	4'-6	4'-0			13	4'-4	15	2'-5	12	4'-3	149.8	1.25
7	5'-0	4'-6	15"	18"	13	4'-4	15	2'-5	12	4'-9	156.0	1.38

NOTES:

1. USE COATED DEFORMED BILLET REINFORCING STEEL BARS CONFORMING TO AASHTO M-284 OR M 111 AND M 31 GRADE 60 RESPECTIVELY.
2. USE STRUCTURAL STEEL CONFORMING TO AASHTO M 270 GRADE 36 EXCEPT WHERE NOTED OTHERWISE.
3. HOT-DIP GALVANIZE THE CHANNEL AND END PLATES AFTER FABRICATION IN ACCORDANCE WITH AASHTO DESIGNATION M 111
4. CHAMPHER ALL EXPOSED CONCRETE CORNERS ¾" EXCEPT WHERE NOTED OTHERWISE.
5. PROVIDE 2" CONCRETE COVER TO REINFORCING STEEL EXCEPT WHERE NOTED OTHERWISE.
6. USE CLASS AA(AE) CAST-IN-PLACE CONCRETE EXCEPT WHERE SPECIFIED OTHERWISE.
7. TYPE II CEMENT (LOW ALKALI) REQUIRED.
8. INCLUDE CONCRETE QUANTITIES FOR CURB AND GUTTER IN ROADWAY QUANTITIES
9. FOR LOCATION AND SIZE OF PIPE(S) SEE ROADWAY PLANS.
10. CUT AND/OR BEND REINFORCING STEEL AS NECESSARY TO CLEAR PIPES AND MAINTAIN 2" CLEARANCE.
11. DEDUCT CONCRETE DISPLACED BY PIPES (TABLE "A") FROM CONCRETE QUANTITIES GIVEN IN SCHEDULE OF INSTALLATION.
12. QUANTITIES IN TABLE "A" ARE FOR PIPE THROUGH 6" WALL THICKNESS.

DESIGN DATA

HS 20-44 OR INTERSTATE ALTERNATE MILITARY LOADING IN ACCORDANCE WITH CURRENT AASHTO AND INTERIM SPECIFICATIONS.

STRUCTURAL STEEL: Fs = 20,000 psi

STRUCTURAL CONCRETE:
Fc = 1400 psi
Fs = 24,000 psi
N = 8

QUANTITIES

SEE SCHEDULE OF INSTALLATION

NO.	DATE	APPR.	REMARKS

REVISIONS

UTAH DEPARTMENT OF TRANSPORTATION
STANDARD DRAWINGS FOR ROAD AND BRIDGE CONSTRUCTION
SALT LAKE CITY, UTAH

RECOMMENDED FOR APPROVAL — JULY 03,2002 DATE

CHAIRMAN STANDARDS COMMITTEE APPROVED — JULY 03,2002 DATE

DEPUTY DIRECTOR

CURB INLET CATCH BASIN

STD DWG
CB 2

SCHEDULE

LINE	PIPE DIA. (IN.) D	PIPE ARCH (IN.) S	PIPE ARCH (IN.) R	DIVERSION BOX H	DIVERSION BOX A	DIMENSIONS H	DIMENSIONS T	DIMENSIONS M	DIMENSIONS N	DIMENSIONS P
1	12″	--	--	1′-9	12″	1′-9	4′-0	8″	2′-4	11 3/8″
2	18″	--	--	2′-3	18″	2′-3	4′-0	1′-0	3′-0	1′-5
3	24″	--	--	2′-9	24″	2′-9	4′-0	1′-6	4′-0	2′-1 1/2
4	30″	--	--	3′-3	30″	3′-3	5′-0	1′-10	4′-8	2′-7 1/8
5	36″	--	--	3′-9	36″	3′-9	6′-0	2′-3	5′-6	3′-2 1/8
6	42″	--	--	4′-3	42″	4′-3	7′-0	2′-8	6′-4	3′-9 1/4
7	48″	--	--	4′-9	48″	4′-9	7′-0	3′-2	7′-4	4′-5 3/4
8	--	36″	22″	2′-7	36″	2′-7	4′-0	1′-8	4′-4	2′-4 1/4
9	--	43″	27″	3′-0	43″	3′-0	4′-0	2′-2	5′-4	3′-0 3/4
10	--	50″	31″	3′-4	50″	3′-4	5′-0	2′-6	6′-0	3′-6 3/8
11	--	58″	36″	3′-9	58″	3′-9	6′-0	3′-0	7′-0	4′-3
12	--	65″	40″	4′-1	65″	4′-1	6′-0	3′-4	7′-8	4′-8 1/2
13	--	72″	44″	4′-5	72″	4′-5	7′-0	3′-9	8′-6	5′-3 5/8

LINE	TRANSITION B1 a	B1 b	B1 f	B1 LENGTH	B2 a	B2 b	B2 f	B2 LENGTH	B3 a	B3 b	B3 f	B3 LENGTH	B4 a	B4 b	B4 f	B4 LENGTH	B5 a	B5 b	B5 f	B5 LENGTH	B6 a	B6 b	B6 f	B6 LENGTH	B7 a	B7 b	B7 f	B7 LENGTH
1	1′-6	1′-7	93°	4′-8	1′-5	1′-4	101°	4′-1	1′-3	1′-2	111°	3′-7	1′-2	1′-0	126°	3′-2	--	--	--	--	--	--	--	--	--	--	--	--
2	1′-11	2′-1	94°	6′-1	1′-9	1′-10	102°	5′-5	1′-6	1′-7	114°	4′-8	1′-3	1′-6	128°	4′-3	--	--	--	--	--	--	--	--	--	--	--	--
3	2′-5	2′-7	94°	7′-7	2′-0	2′-4	104°	6′-8	1′-8	2′-2	115°	6′-0	1′-4	2′-1	128°	5′-6	--	--	--	--	--	--	--	--	--	--	--	--
4	2′-10	3′-1	93°	9′-0	2′-5	2′-10	101°	8′-1	2′-1	2′-8	110°	7′-5	1′-7	2′-7	120°	6′-9	1′-4	2′-7	130°	6′-6	--	--	--	--	--	--	--	--
5	3′-4	3′-7	93°	10′-6	2′-11	3′-4	100°	9′-7	2′-7	3′-2	107°	8′-11	2′-2	3′-2	115°	8′-6	1′-9	3′-1	123°	7′-11	1′-4	3′-2	131°	7′-8	--	--	--	--
6	3′-10	4′-2	93°	12′-2	3′-5	3′-11	98°	11′-3	3′-0	3′-10	105°	10′-8	2′-8	3′-8	111°	10′-0	2′-2	3′-8	118°	9′-6	1′-9	3′-8	125°	9′-1	1′-4	3′-8	132°	8′-8
7	4′-4	4′-8	93°	13′-8	3′-10	4′-5	99°	12′-8	3′-4	4′-4	105°	12′-0	2′-10	4′-3	112°	11′-4	2′-4	4′-3	119°	10′-10	1′-10	4′-3	125°	10′-4	1′-4	4′-4	132°	10′-0
8	3′-3	2′-5	95°	8′-1	2′-8	2′-4	106°	7′-4	2′-1	2′-3	117°	6′-7	1′-5	2′-4	129°	6′-1	--	--	--	--	--	--	--	--	--	--	--	--
9	3′-9	2′-11	95°	9′-7	3′-0	2′-9	107°	8′-6	2′-3	2′-10	119°	7′-11	1′-6	2′-11	130°	7′-4	--	--	--	--	--	--	--	--	--	--	--	--
10	4′-4	3′-3	94°	10′-10	3′-8	3′-2	104°	10′-0	2′-11	3′-2	113°	9′-3	2′-3	3′-3	123°	8′-9	1′-6	3′-5	131°	8′-4	--	--	--	--	--	--	--	--
11	5′-1	3′-8	94°	12′-5	4′-4	3′-8	102°	11′-8	3′-7	3′-8	110°	10′-11	2′-11	3′-9	118°	10′-5	2′-3	3′-11	125°	10′-1	1′-6	4′-1	132°	9′-8	--	--	--	--
12	5′-7	4′-0	94°	13′-7	4′-9	3′-11	102°	12′-7	3′-11	4′-0	110°	11′-11	3′-2	4′-1	118°	11′-4	2′-4	4′-4	125°	11′-0	1′-7	4′-7	132°	10′-9	--	--	--	--
13	6′-2	4′-4	93°	14′-10	5′-5	4′-4	100°	14′-1	4′-8	4′-4	107°	13′-4	3′-10	4′-5	113°	12′-8	3′-1	4′-7	119°	12′-3	2′-4	4′-9	125°	11′-10	1′-6	5′-0	131°	11′-6

LINE	C LENGTH	C NO.BARS	E A	E LENGTH	E NO.BARS	COLLAR A1 LENGTH	A1 NO.BARS	A2 LENGTH	A2 NO.BARS	A3 LENGTH	A3 NO.BARS	A4 LENGTH	A4 NO.BARS	LINE
1	4′-5	1	3′-10	5′-10	4	2′-0	8	1′-4	8	--	–	2′-8	8	1
2	4′-5	2	3′-10	5′-10	4	2′-6		1′-10		--	–	3′-2		2
3	4′-5	2	3′-10	5′-10	6	3′-0		2′-6		--	–	3′-8		3
4	5′-5	3	4′-10	6′-10	6	3′-6		2′-8		--	–	4′-2		4
5	6′-5	3	5′-10	7′-10	8	4′-0		2′-10		--	–	4′-8		5
6	7′-5	4	6′-10	8′-10	8	4′-6		3′-2		--	–	5′-2		6
7	7′-5	4	6′-10	8′-10	10	5′-0		3′-5	8	--	–	5′-8		7
8	4′-5	3	3′-10	5′-10	4	2′-10		3′-0	4	2′-3	4	4′-8		8
9	4′-5	4	3′-10	5′-10	4	3′-3		3′-2		2′-5		5′-3		9
10	5′-5	5	4′-10	6′-10	6	3′-7		3′-5		2′-5		5′-10		10
11	6′-5	5	5′-10	7′-10	8	4′-0		3′-6		2′-7		6′-6		11
12	6′-5	6	5′-10	7′-10	8	4′-4		4′-0		3′-5		7′-1		12
13	7′-5	6	6′-10	8′-10	10	4′-8	8	4′-0	4	3′-0	4	7′-8	8	13

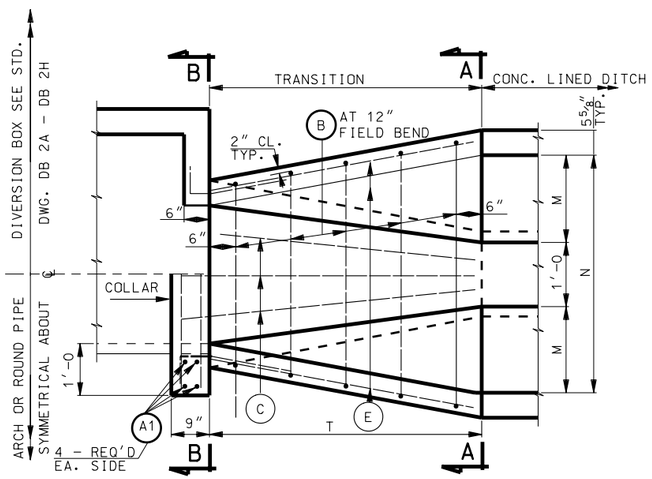

PLAN

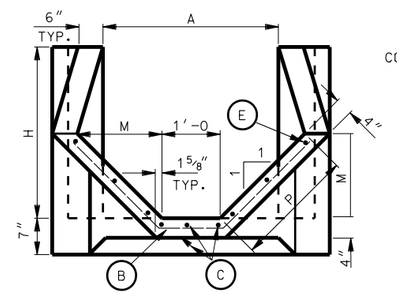

SECTION A-A
(DIVERSION BOX INSTALLATION)

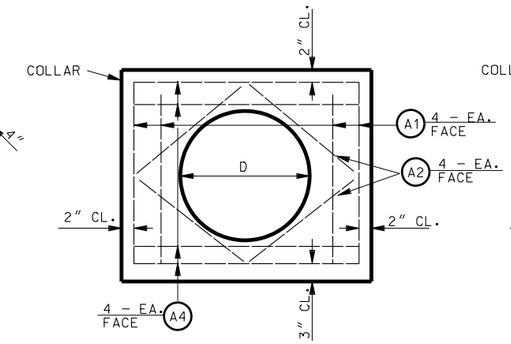

SECTION B-B
(ROUND PIPE INSTALLATION)

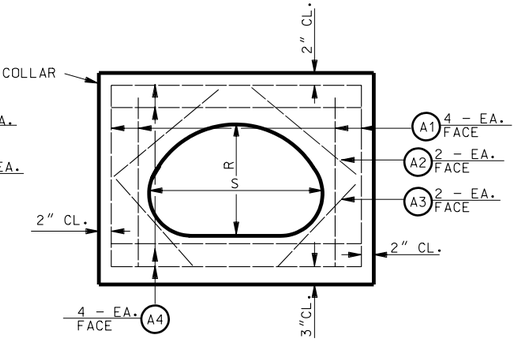

SECTION B-B
(ARCH PIPE INSTALLATION)

NOTES:

1. USE COATED DEFORMED BILLET REINFORCING STEEL BARS CONFORMING TO AASHTO M 284 OR M 111 AND M 31 GRADE 60.
2. TYPE II CEMENT (LOW ALKALI) REQUIRED.
3. DEDUCT CONCRETE DISPLACED BY PIPE FROM THOSE CONCRETE QUANTITIES GIVEN IN SCHEDULE.
4. IF PIPE SIZES OTHER THAN SHOWN ARE USED OR IF PIPES ARE SKEWED, ADJUST CONCRETE QUANTITIES ACCORDINGLY.
5. USE #4 REINFORCING STEEL SPACED EQUALLY AT 12″±

DESIGN DATA

HS 20-44 OR INTERSTATE ALTERNATE LOADING IN ACCORDANCE WITH CURRENT AASHTO SPECIFICATIONS AND INTERIM SPECIFICATIONS:

fc = 1,400 psi
fs = 24,000 psi
n = 8

QUANTITIES
(SEE SCHEDULE)

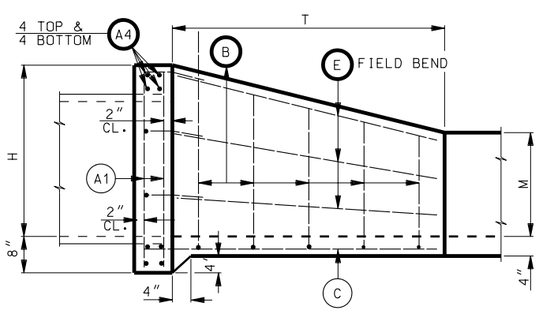

ELEVATION

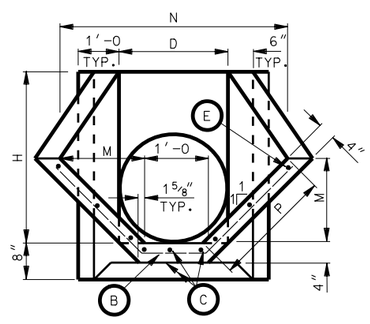

SECTION A-A
(ROUND PIPE INSTALLATION)

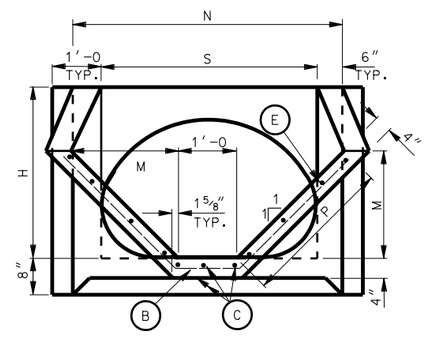

SECTION A-A
(ARCH PIPE INSTALLATION)

QUANTITIES				
LINE	REINF. STEEL TRANSITION Lb.	REINF. STEEL COLLAR Lb.	CONCRETE TRANSITION Cu.Yd.	CONCRETE COLLAR Cu.Yd.
1	29	32.1	0.2614	0.2014
2	35	40.1	0.3351	0.2836
3	47	49.1	0.4219	0.3796
4	64	55.2	0.6174	0.4896
5	90	61.5	0.8587	0.6134
6	115	69.6	1.1392	0.7511
7	133	75.3	1.2887	0.9028
8	43	54.0	0.4503	0.4514
9	50	60.3	0.5325	0.5687
10	77	66.9	0.7429	0.6852
11	107	72.4	1.0151	0.8383
12	115	81.8	1.1100	0.9786
13	150	85.6	1.4140	1.1296

REVISIONS

NO.	DATE	APPR.	REMARKS

UTAH DEPARTMENT OF TRANSPORTATION
STANDARD DRAWINGS FOR ROAD AND BRIDGE CONSTRUCTION
SALT LAKE CITY, UTAH

RECOMMENDED FOR APPROVAL — JULY 03,2002 DATE
CHAIRMAN STANDARDS COMMITTEE APPROVED — JULY 03,2002 DATE
DEPUTY DIRECTOR

STANDARD TRANSITION CONCRETE LINED DITCH TO PIPE OR DIVERSION BOX
STANDARD DRAWING TITLE

STD DWG
CB 3

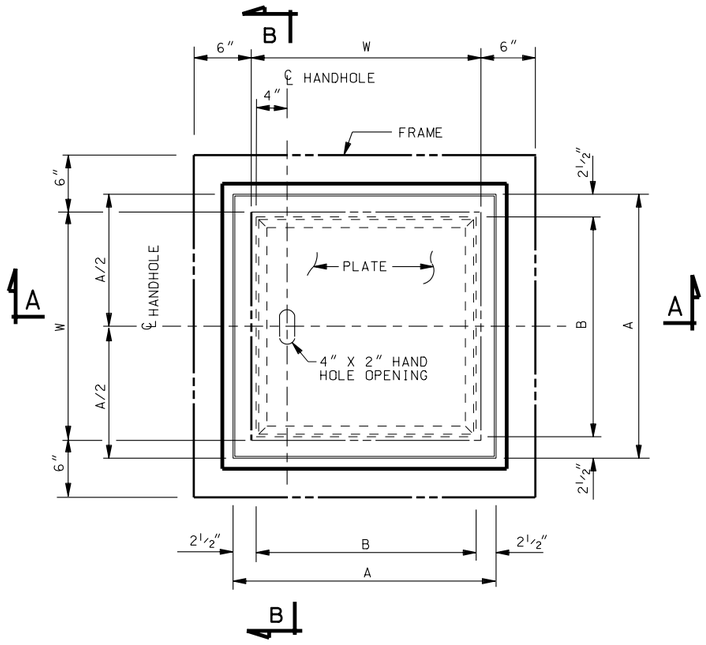

PLAN

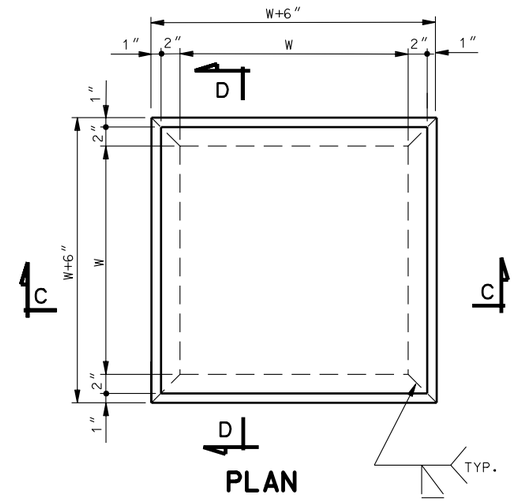

PLAN

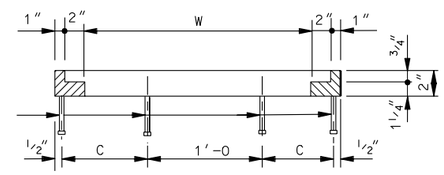

SECTION C-C
SECTION D-D SIMILAR

FRAME DETAILS

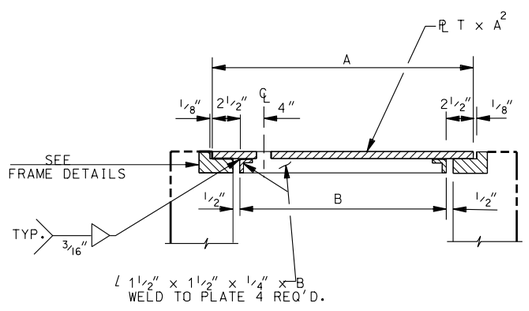

SECTION A-A

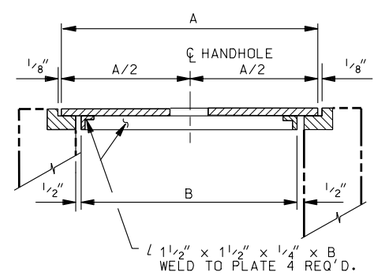

SECTION B-B

COVER DETAILS

NOTES:

ALL STRUCTURAL STEEL: STRUCTURAL CARBON STEEL CONFORMING TO AASHTO DESIGNATION M 270, GRADE 36. AND HOT DIP GALVANIZE AFTER FABRICATION IN ACCORDANCE WITH ASTM A 123.

DESIGN DATA

THE DESIGN IS IN ACCORDANCE WITH AASHTO AND INTERIM SPECIFICATIONS:
Fs = 20,000 psi
LIVE LOAD - HS 20-44

DIMENSIONS					QUANTITIES (LB)		
W	A	B	C	T	COVER	FRAME	TOTAL
2′-0	2′-3¾	1′-10¾	8½″	½″	131	163	294
2′-6	2′-9¾	2′-4¾	11½″	⅝″	189	195	384

REVISIONS

NO.	DATE	APPR.	REMARKS

UTAH DEPARTMENT OF TRANSPORTATION
STANDARD DRAWINGS FOR ROAD AND BRIDGE CONSTRUCTION
SALT LAKE CITY, UTAH

RECOMMENDED FOR APPROVAL — JULY 03,2002 DATE
CHAIRMAN STANDARDS COMMITTEE APPROVED — JULY 03,2002 DATE
DEPUTY DIRECTOR

SOLID COVER FOR
STD DWG DB 1
MS-18 LOADING

STD DWG
CB 4

STANDARD SCREW GATE AND FRAME DIMENSIONS FOR 5'-0 OF HEAD OR LESS

SIZE OF CLEAR ** OPENING	A	18"	24"	18"	24"	30"	36"	48"	24"	30"	36"	42"	48"	24"	30"	36"	42"	48"	60"	24"	30"	36"	42"	48"	60"	72"	24"	30"	36"	42"	48"
	B	18"	18"	24"	24"	24"	24"	24"	30"	30"	30"	30"	30"	36"	36"	36"	36"	36"	36"	42"	42"	42"	42"	42"	42"	42"	48"	48"	48"	48"	48"
MINIMUM GATE DIMENSION	HEIGHT	18"	18"	24"	24"	24"	24"	24"	30"	30"	30"	30"	30"	36"	36"	36"	36"	36"	36"	42"	42"	42"	42"	42"	42"	42"	48"	48"	48"	48"	48"
	WIDTH	22"	28"	22"	28"	34"	41"	53"	28"	34"	41"	47"	52"	29"	35"	41"	47"	54"	67"	29"	35"	41"	47"	54"	67"	79"	30"	36"	42"	48"	54"
* FRAME HEIGHTS	5'	X	X	X	X	X	X		X	X				X	X					X	X						X	X			
	6'	X	X	X	X	X	X		X	X	X	X		X	X	X	X			X	X	X	X				X	X	X	X	
	7'	X	X	X	X	X	X	X	X	X	X	X	X	X	X	X	X	X		X	X	X	X	X			X	X	X	X	X
	8'	X	X	X	X	X	X	X	X	X	X	X	X	X	X	X	X	X		X	X	X	X	X			X	X	X	X	X
	10'	X	X	X	X	X	X	X	X	X	X	X	X	X	X	X	X	X	X	X	X	X	X	X	X	X	X	X	X	X	X
STEM DIAMETER		1.12"	1.12"	1.12"	1.12"	1.12"	1.12"	1.12"	1.12"	1.12"	1.12"	1.12"	1.50"	1.12"	1.12"	1.12"	1.50"	1.50"	1.50"	1.12"	1.12"	1.50"	1.50"	1.50"	1.50"	2.00"	1.50"	1.50"	1.50"	1.50"	1.50"
WHEEL DIAMETER		10"	10"	10"	10"	10"	14"	24"	14"	14"	14"	18"	24"	14"	18"	18"	24"	24"	30"	18"	18"	24"	24"	30"	24"	30"	24"	24"	24"	30"	30"

* X INDICATES THE FRAME HEIGHT OPTIONS AVAILABLE WITH THE SPECIFIC GATE SIZES

** USE SCREW GATES SELECTED FROM THESE BASIC SIZE WITH EITHER FLUMES, ROUND PIPE OR PIPE ARCH INSTALLATIONS.

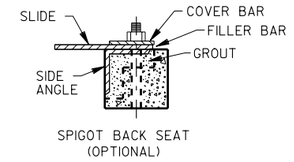

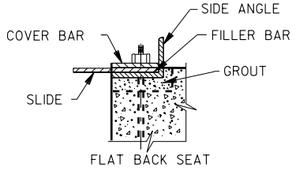

SECTION A-A

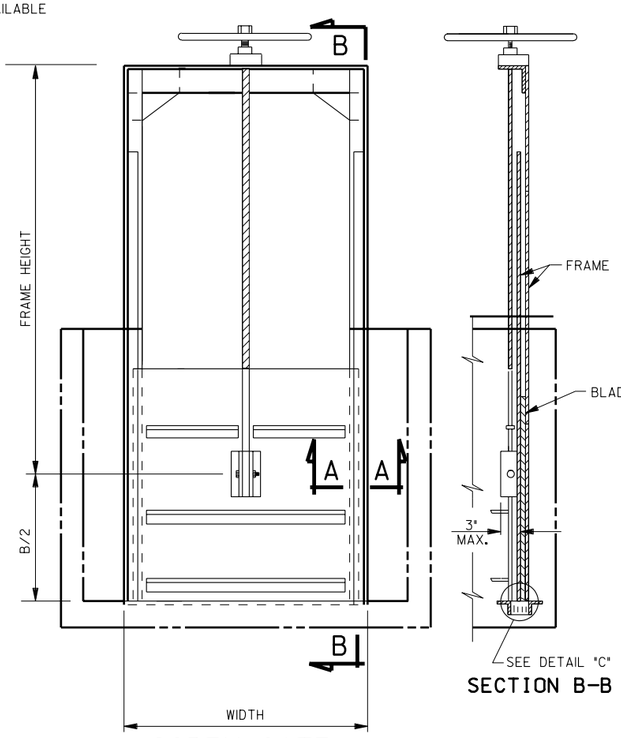

SECTION B-B

SCREW GATE INSTALLATION DETAIL FOR FLUME OUTLET

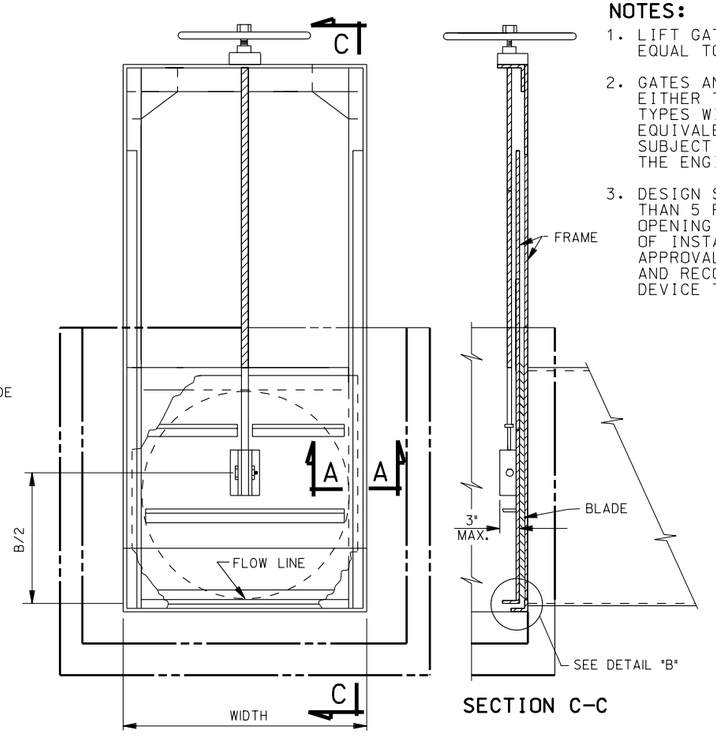

SECTION C-C

SCREW GATE INSTALLATION DETAIL FOR PIPE OUTLET

(ARCH PIPE INSTALLATION SIMILAR)

NOTES:

1. LIFT GATE IS PRINCIPALLY FOR USE WHEN OPENING IS EQUAL TO OR EXCEEDS AN AREA OF 5 SQUARE FEET.
2. GATES AND FRAMES: OF THE TYPE SHOWN AND BE EITHER THE FLAT BACK SEAT OR SPIGOT BACK SEAT TYPES WITH A THROUGH FLUSH BOTTOM OPENING. EQUIVALENT GATE AND FRAME TYPES ACCEPTABLE, SUBJECT TO THE APPROVAL OF SHOP DRAWING BY THE ENGINEER.
3. DESIGN SLIDE GATES AND FRAMES FOR NOT LESS THAN 5 FEET OF FACE PRESSURE ABOVE THE GATE OPENING AND ZERO BACK PRESSURE. IN ALL CASES OF INSTALLATION, SUBMIT TO THE ENGINEER FOR APPROVAL THE MANUFACTURERS SPECIFICATIONS AND RECOMMENDATIONS TO INCLUDE LIFTING DEVICE TYPE.

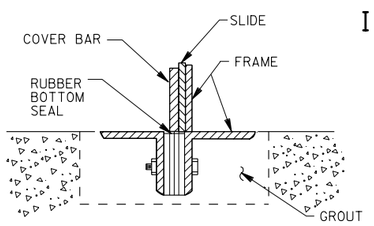

DETAIL "C"

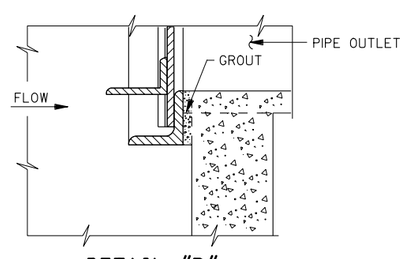

DETAIL "B"

(TYPICAL WALL SILL INSTALLATION)

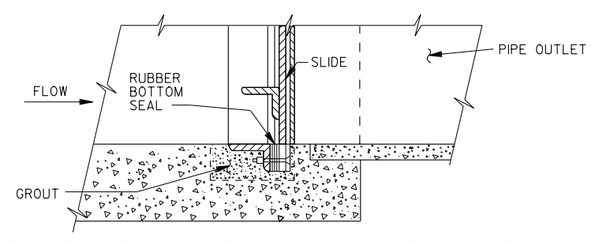

TYP. PIPE FLOOR SILL INSTALLATION

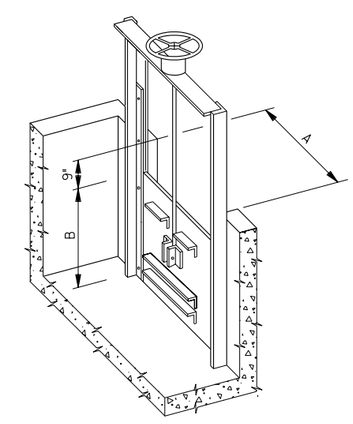

FLUME OUTLET DETAIL

NO.	DATE	APPR.	REMARKS

REVISIONS

UTAH DEPARTMENT OF TRANSPORTATION

STANDARD DRAWINGS FOR ROAD AND BRIDGE CONSTRUCTION

SALT LAKE CITY, UTAH

RECOMMENDED FOR APPROVAL — JULY 03, 2002 DATE

CHAIRMAN STANDARDS COMMITTEE APPROVED — JULY 03, 2002 DATE

DEPUTY DIRECTOR

STANDARD SCREW GATE AND FRAME

STD DWG

CB 5

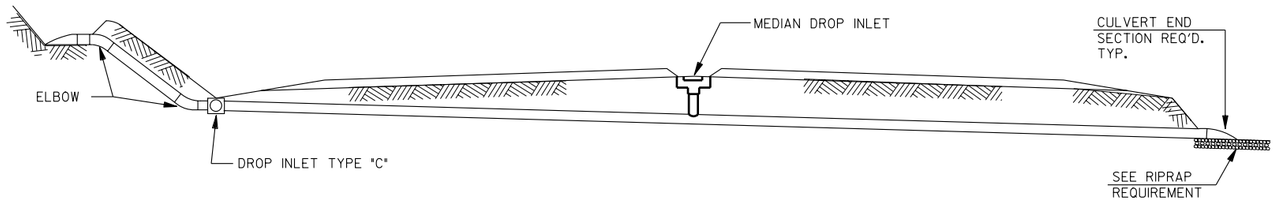

TYP. CROSS SECTION SHOWING MEDIAN DROP INLET AND DROP INLET TYPE "C"

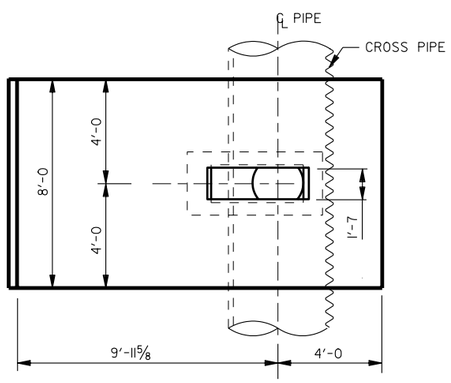

DIKE APRON PLAN

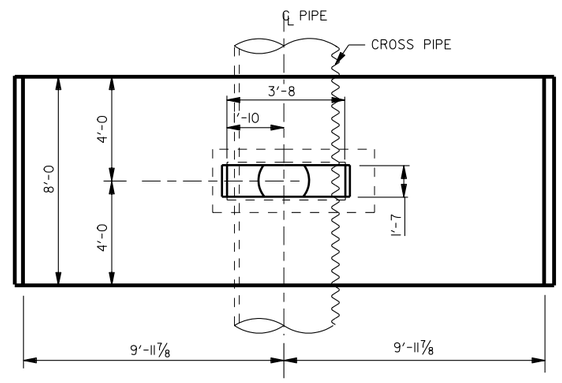

PLAN

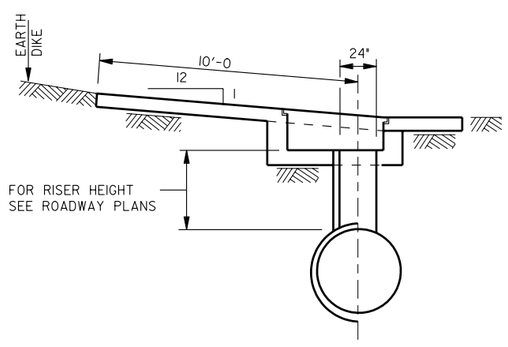

DROP INLET TYPE "A"

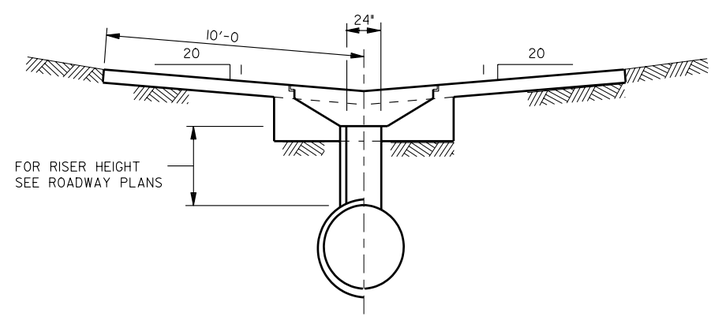

DROP INLET TYPE "B"

DETAILS OF DROP INLET INTO PIPE CULVERT

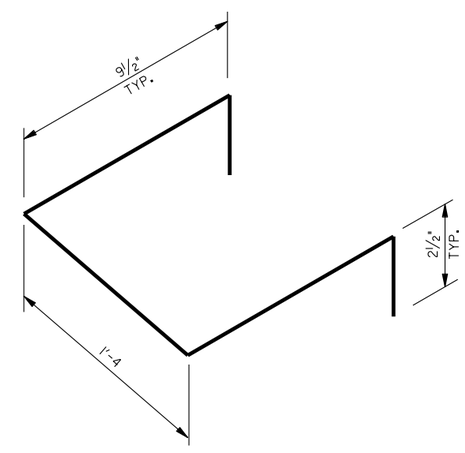

TYP. LADDER RUNG DETAIL
(SEE DROP INLET TYPE "C" AND "D" TABLES)

GENERAL NOTES FOR CB 6A TO CB 6H

1. ALL REINFORCING STEEL: COATED DEFORMED BILLET STEEL BARS CONFORMING TO AASHTO M 284 OR M 111 AND M 31M GRADE 400.
2. USE 24" DIA. PIPE RISER UNLESS OTHERWISE SPECIFIED.
3. TYPE II CEMENT (LOW ALKALI) REQUIRED.
4. LADDER RUNGS MADE FROM COATED #7 REBAR.
5. USE GRATING AND BEARING ANGLES AS DESCRIBED ON STD DWG GF 3
6. DEDUCT CONCRETE DISPLACED BY PIPES FROM QUANTITIES GIVEN IN THE APPROPRIATE TABLE.
7. ORIENTED GRATES WITH LONGITUDINAL AXIS PARALLEL TO MAJOR FLOW OF DITCH, IN ALL CASES.
8. CONSTRUCT AN EARTH DIKE AS PART OF DROP INLET. TYPE "B" DROP INLET DOES NOT REQUIRE ON EARTH DIKE.
9. NOT FOR USE WITH EITHER CORRUGATED POLYETHYLENE PIPE OR VITRIFIED CLAY PIPE.
10. PLACE A NOTE ON THE PLAN AND PROFILE SHEET CLEARLY DESCRIBING THE TYPE OF DROP INLET REQUIRED, THE RISER DIAMETER WHEN OTHER THAN 24" DIA. AND WHETHER OR NOT AN APRON IS REQUIRED AT THE APPROPRIATE STATION.
11. USE STRAIGHT #5 REBAR AT 24" CENTERS EXCEPT AS NOTED OTHERWISE. CUT AND FIELD BEND BARS WHERE NECESSARY TO CLEAR PIPES.

DESIGN DATA

HS 20-44 LOADING OR INTERSTATE ALTERNATE LOADING IN ACCORDANCE WITH CURRENT AASHTO AND INTERIM SPECIFICATIONS. f'_c = 1400 psi
f_s = 24000 psi
n = 8

QUANTITIES

(SEE TABLES)

NO.	DATE	APPR.	REMARKS

REVISIONS

UTAH DEPARTMENT OF TRANSPORTATION
STANDARD DRAWINGS FOR ROAD AND BRIDGE CONSTRUCTION
SALT LAKE CITY, UTAH

RECOMMENDED FOR APPROVAL — JULY 03,2002 DATE
CHAIRMAN STANDARDS COMMITTEE APPROVED — JULY 03,2002 DATE
DEPUTY DIRECTOR

STANDARD DRAWING TITLE
STANDARD DROP INLET DETAILS GENERAL NOTES AND INSTALLATION DETAIL

STD DWG
CB 6A

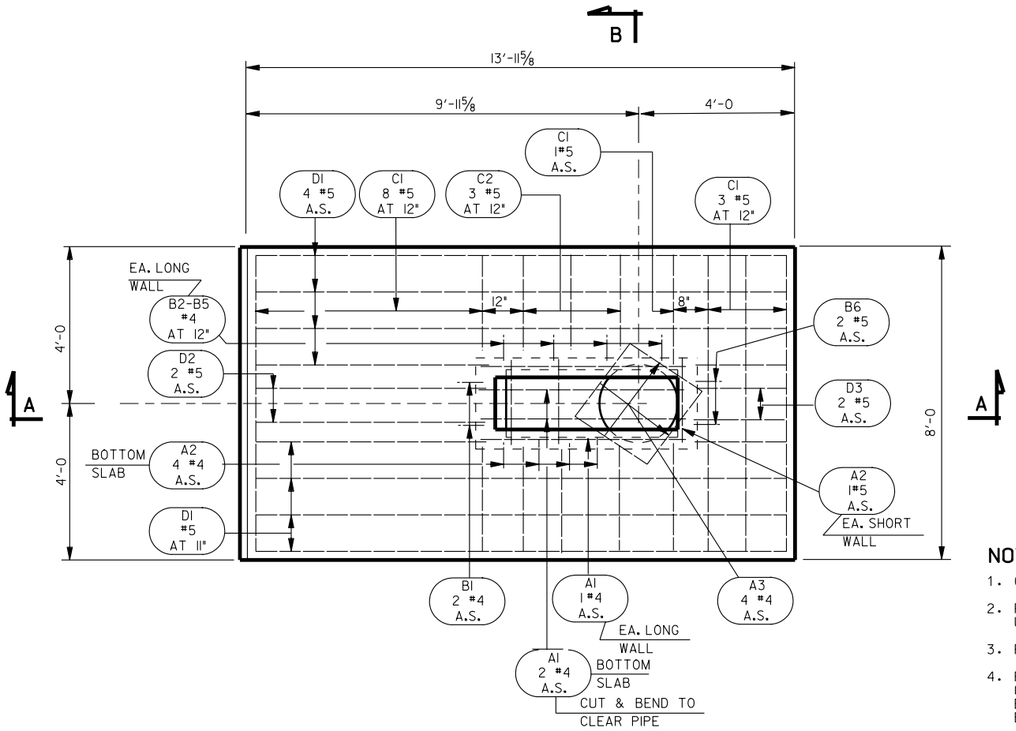

PLAN TYPE "A"

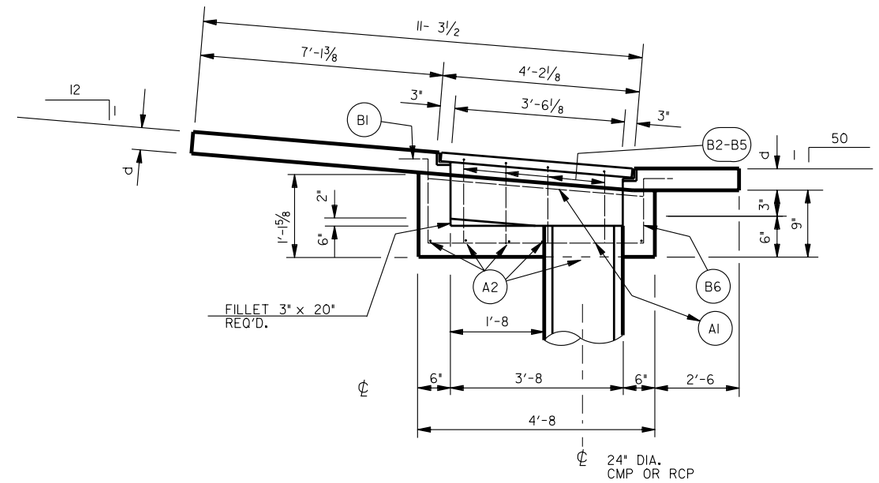

SECTION A-A

NOTES:

1. CENTER APRONS ON DITCH.
2. PLACE 6" OF UNTREATED BASE COURSE AND COMPACT TO THE DENSITY INDICATED BY UDOT STANDARD SPECIFICATIONS UNDER EACH SLAB PRIOR TO FORMING.
3. FIELD BEND D1 BARS AS REQUIRED TO CONFORM TO SLOPE.
4. FOUR STANDARD ANCHOR BOLTS ¾" DIA. X 6" REQUIRED. SPACE 19"+/- ON PERIPHERY OF CMP PIPE RISER AND POSITION THEM 3" FROM END OF SAID RISER. ANCHOR BOLTS AND NUTS. INCLUDE PAYMENT FOR FURNISHING AND PLACING GALVANIZE ANCHOR BOLTS AND NUTS IN THE PRICE PER LINEAR FOOT OF PIPE.
5. PROVIDE 2" CONCRETE COVER TO REINFORCING STEEL EXCEPT WHERE NOTED OTHERWISE.

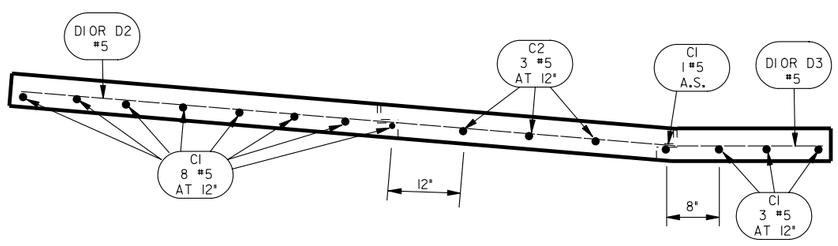

TYP. LONGITUDINAL APRON SECTION
(FOR TYPE "A" DROP INLET)

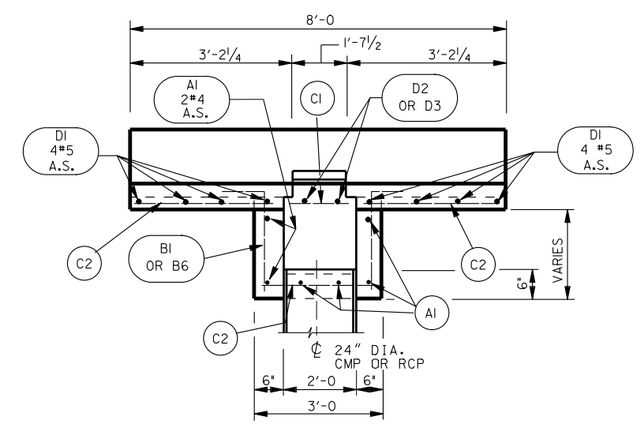

SECTION B-B

REINFORCING STEEL SCHEDULE

DROP INLET TYPE	DIMENSION (d)	A1			A2			A3			B1			B2			B3			B4			B5			B6			C1			C2			D1			D2			D3			QUANTITIES	
		SIZE	NO.	LENGTH	SIZE	NO.	LENGTH	SIZE	NO.	LENGTH	SIZE	NO.	a (d 1'-2)	SIZE	NO.	a (d 1'-2)	SIZE	NO.	a (d 1'-2)	SIZE	NO.	a (d 1'-2)	SIZE	NO.	a (d 1'-2)	SIZE	NO.	a (d 1'-2)	SIZE	NO.	LENGTH	SIZE	NO.	LENGTH	SIZE	NO.	LENGTH	SIZE	NO.	LENGTH	SIZE	NO.	LENGTH	REINF STEEL LB.	CONC. CU.YD.
A	8"	4	5	4'-4	4	5	2'-8	4	4	2'-0	4	2	1'-6	4	2	1'-5	4	2	1'-4	4	2	1'-3	4	2	1'-2	4	2	1'-0	6	12	7'-8	6	6	2'-10	5	8	13'-8	5	2	5'-5	5	2	3'-8	359	2.919

REVISIONS

NO.	DATE	APPR.	REMARKS

UTAH DEPARTMENT OF TRANSPORTATION
STANDARD DRAWINGS FOR ROAD AND BRIDGE CONSTRUCTION
SALT LAKE CITY, UTAH

RECOMMENDED FOR APPROVAL — JULY 03,2002 DATE

CHAIRMAN STANDARDS COMMITTEE APPROVED — JULY 03,2002 DATE

DEPUTY DIRECTOR

STANDARD CATCH BASIN AND CLEANOUT BOX DROP INLET TYPE "A" DETAIL

STANDARD DRAWING TITLE

STD DWG
CB 6B

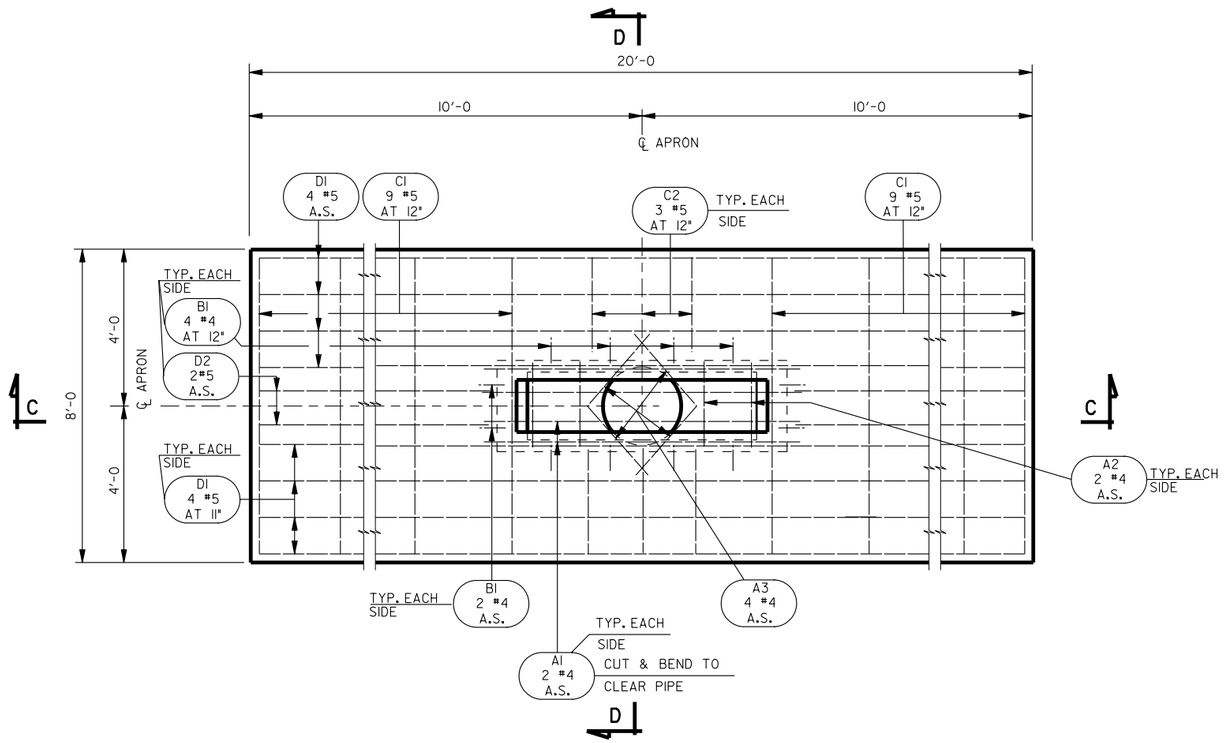

PLAN TYPE "B"

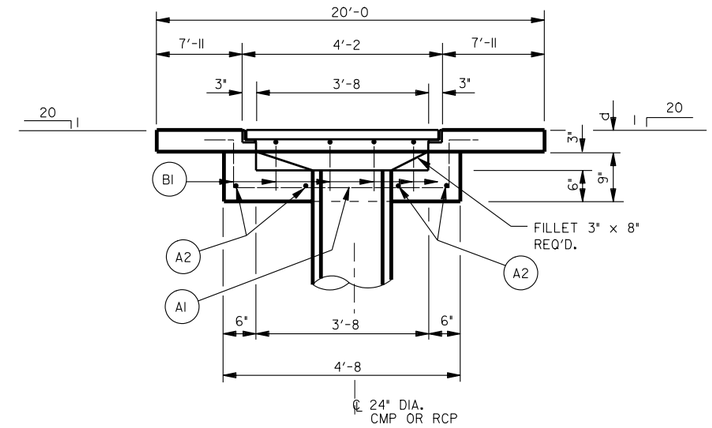

SECTION C-C

NOTE:
SEE STD DWG CB 6B

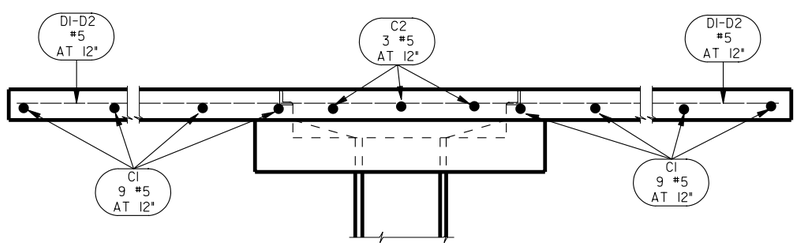

TYP. LONGITUDINAL APRON SECTION
(FOR TYPE "B" DROP INLET)

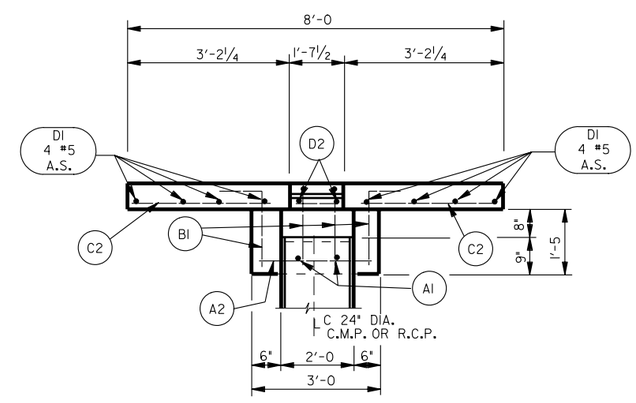

SECTION D-D

REINFORCING STEEL SCHEDULE

DROP INLET TYPE	DIMENSION (d)	A1			A2			A3			B1			C1			C2			D1			D2			QUANTITIES	
		SIZE	NO.	LENGHT	SIZE	NO.	LENGHT	SIZE	NO.	LENGHT	SIZE	NO.	a (1'-2)	SIZE	NO.	LENGHT	SIZE	NO.	LENGHT	SIZE	NO.	LENGHT	SIZE	NO.	LENGHT	REINF. STEEL	CONC.
																										LB.	CU.YD.
B	8"	4	6	4'-4	4	8	2'-8	4	4	2'-0	4	12	1'-0	6	18	7'-8	6	6	2'-10	5	8	19'-8	5	4	5'-5	483	4.056

REVISIONS

NO.	DATE	APPR.	REMARKS

UTAH DEPARTMENT OF TRANSPORTATION
STANDARD DRAWINGS FOR ROAD AND BRIDGE CONSTRUCTION
SALT LAKE CITY, UTAH

RECOMMENDED FOR APPROVAL — JULY 03,2002 DATE

CHAIRMAN STANDARDS COMMITTEE APPROVED — JULY 03,2002 DATE

DEPUTY DIRECTOR

STANDARD DRAWING TITLE
STANDARD CATCH BASIN AND CLEANOUT BOX DROP INLET TYPE "B" DETAILS

STD DWG
CB 6C

TABLE #1

MAX. PIPE SIZES : 18" DIA. RCP OR 24" DIA. CMP

LINE NO.	DIMENSIONS H	K	W	M	A LENGTH	A NO.	B1 LENGTH	B1 NO.	B2 LENGTH	B2 NO.	C1 LENGTH	C1 NO.	C2 LENGTH	C2 NO.	D1 LENGTH	D1 NO.	D2 LENGTH	D2 NO.	D3 LENGTH	D3 NO.	D4 LENGTH	D4 NO.	D5 LENGTH	D5 NO.	G LENGTH	G NO.	QUANTITIES STANDARD REINF. STEEL LB.	STANDARD CONC. CU.YD.	W/ATT'CH APRON REINF. STEEL LB.	W/ATT'CH APRON CONC. CU.YD.
1	3'-6	2'-6	2'-0	4½"	4'-4	9	2'-8	8	6"	4	4'-4	2	2'-8	4	3'-5	4	3'-4	2	3'-3	2	3'-2	2	3'-1	4	3'-4	2	143	1.067	437	3.456
2	4'-0	3'-0	↑	↑	↑	11	↑	10	↑	↑	↑	↑	↑	↑	3'-11	↑	3'-10	↑	3'-9	↑	3'-8	↑	3'-7	↑	↑	3	170	1.190	464	3.579
3	4'-6	3'-6				11		10							4'-5		4'-4		4'-3		4'-2		4'-1			3	177	1.313	471	3.702
4	5'-0	4'-0				13		12							4'-11		4'-10		4'-9		4'-8		4'-7			4	197	1.437	491	3.826
5	5'-6	4'-6				13		12							5'-5		5'-4		5'-3		5'-2		5'-1			4	211	1.560	505	3.949
6	6'-0	5'-0				15		14							5'-11		5'-10		5'-9		5'-8		5'-7			5	238	1.684	532	4.073
7	6'-6	5'-6				15		14							6'-5		6'-4		6'-3		6'-2		6'-1			5	245	1.807	539	4.196
8	7'-0	6'-0				17		16							6'-11		6'-10		6'-9		6'-8		6'-7			6	272	1.931	566	4.320
9	7'-6	6'-6				17		16							7'-5		7'-4		7'-3		7'-2		7'-1			6	279	2.054	573	4.443
10	8'-0	7'-0				19		18							7'-11		7'-10		7'-9		7'-8		7'-7			7	306	2.178	600	4.567
11	8'-6	7'-6	↓	↓	↓	19	↓	18	↓	↓	↓	↓	↓	↓	8'-5	↓	8'-4	↓	8'-3	↓	8'-2	↓	8'-1	↓	↓	7	314	2.301	608	4.690
12	9'-0	8'-0	2'-0	4½"	4'-4	21	2'-8	20	6"	4	4'-4	2	2'-8	4	8'-11	4	8'-10	2	8'-9	2	8'-8	2	8'-7	4	3'-4	8	341	2.425	635	4.814

TABLE #2

MAX. PIPE SIZES : 24" DIA. RCP OR 30" DIA. CMP

LINE NO.	DIMENSIONS H	K	W	M	A LENGTH	A NO.	B1 LENGTH	B1 NO.	B2 LENGTH	B2 NO.	C1 LENGTH	C1 NO.	C2 LENGTH	C2 NO.	D1 LENGTH	D1 NO.	D2 LENGTH	D2 NO.	D3 LENGTH	D3 NO.	D4 LENGTH	D4 NO.	D5 LENGTH	D5 NO.	G LENGTH	G NO.	QUANTITIES STANDARD REINF. STEEL LB.	STANDARD CONC. CU.YD.	W/ATT'CH APRON REINF. STEEL LB.	W/ATT'CH APRON CONC. CU.YD.
1	—	—	—	—	—	—	—	—	—	—	—	—	—	—	—	—	—	—	—	—	—	—	—	—	—	—	—	—	—	—
2	4'-0	3'-0	2'-6	10½"	4'-4	13	3'-2	10	1'-0	4	4'-4	2	3'-2	4	3'-11	4	3'-10	2	3'-9	2	3'-8	2	3'-7	4	3'-4	3	188	1.347	471	3.679
3	4'-6	3'-6	↑	↑	↑	13	↑	10	↑	↑	↑	↑	↑	↑	4'-5	↑	4'-4	↑	4'-3	↑	4'-2	↑	4'-1	↑	↑	3	195	1.480	478	3.812
4	5'-0	4'-0				15		12							4'-11		4'-10		4'-9		4'-8		4'-7			4	223	1.612	506	3.944
5	5'-6	4'-6				15		12							5'-5		5'-4		5'-3		5'-2		5'-1			4	230	1.745	513	4.077
6	6'-0	5'-0				17		14							5'-11		5'-10		5'-9		5'-8		5'-7			5	258	1.878	541	4.210
7	6'-6	5'-6				17		14							6'-5		6'-4		6'-3		6'-2		6'-1			5	266	2.010	549	4.342
8	7'-0	6'-0				19		16							6'-11		6'-10		6'-9		6'-8		6'-7			6	294	2.143	577	4.475
9	7'-6	6'-6				19		16							7'-5		7'-4		7'-3		7'-2		7'-1			6	301	2.276	584	4.608
10	8'-0	7'-0				21		18							7'-11		7'-10		7'-9		7'-8		7'-7			7	329	2.409	612	4.741
11	8'-6	7'-6	↓	↓	↓	21	↓	18	↓	↓	↓	↓	↓	↓	8'-5	↓	8'-4	↓	8'-3	↓	8'-2	↓	8'-1	↓	↓	7	336	2.541	619	4.873
12	9'-0	8'-0	2'-6	10½"	4'-4	23	3'-2	20	1'-0	4	4'-4	2	3'-2	4	8'-11	4	8'-10	2	8'-9	2	8'-8	2	8'-7	4	3'-4	8	364	2.974	647	5.006

TABLE #3

MAX. PIPE SIZES : 30" DIA. RCP OR 36" DIA. CMP

LINE NO.	DIMENSIONS H	K	W	M	A LENGTH	A NO.	B1 LENGTH	B1 NO.	B2 LENGTH	B2 NO.	C1 LENGTH	C1 NO.	C2 LENGTH	C2 NO.	D1 LENGTH	D1 NO.	D2 LENGTH	D2 NO.	D3 LENGTH	D3 NO.	D4 LENGTH	D4 NO.	D5 LENGTH	D5 NO.	G LENGTH	G NO.	QUANTITIES STANDARD REINF. STEEL LB.	STANDARD CONC. CU.YD.	W/ATT'CH APRON REINF. STEEL LB.	W/ATT'CH APRON CONC. CU.YD.
1	4'-6	3'-6	3'-0	1'-4½	4'-4	15	3'-8	10	1'-6	4	4'-4	2	3'-8	4	4'-5	5	4'-4	2	4'-3	2	4'-2	2	4'-1	5	3'-4	3	223	1.646	493	3.920
2	5'-0	4'-0	↑	↑	↑	17	↑	12	↑	↑	↑	↑	↑	↑	4'-11	↑	4'-10	↑	4'-9	↑	4'-8	↑	4'-7	↑	↑	4	252	1.788	522	4.062
3	5'-6	4'-6				17		12							5'-5		5'-4		5'-3		5'-2		5'-1			4	261	1.930	531	4.204
4	6'-0	5'-0				19		14							5'-11		5'-10		5'-9		5'-8		5'-7			5	291	2.072	561	4.346
5	6'-6	5'-6				19		14							6'-5		6'-4		6'-3		6'-2		6'-1			5	299	2.214	569	4.488
6	7'-0	6'-0				21		16							6'-11		6'-10		6'-9		6'-8		6'-7			6	329	2.356	599	4.630
7	7'-6	6'-6				21		16							7'-5		7'-4		7'-3		7'-2		7'-1			6	338	2.498	608	4.772
8	8'-0	7'-0				23		18							7'-11		7'-10		7'-9		7'-8		7'-7			7	368	2.640	638	4.914
9	8'-6	7'-6	↓	↓	↓	23	↓	18	↓	↓	↓	↓	↓	↓	8'-5	↓	8'-4	↓	8'-3	↓	8'-2	↓	8'-1	↓	↓	7	376	2.781	646	5.055
10	9'-0	8'-0	3'-0	1'-4½	4'-4	25	3'-8	20	1'-6	4	4'-4	2	3'-8	4	8'-11	5	8'-10	2	8'-9	2	8'-8	2	8'-7	5	3'-4	8	406	2.923	676	5.197

TABLE #4

MAX. PIPE SIZES : 36" DIA. RCP OR 42" DIA. CMP

LINE NO.	DIMENSIONS H	K	W	M	A LENGTH	A NO.	B1 LENGTH	B1 NO.	B2 LENGTH	B2 NO.	C1 LENGTH	C1 NO.	C2 LENGTH	C2 NO.	D1 LENGTH	D1 NO.	D2 LENGTH	D2 NO.	D3 LENGTH	D3 NO.	D4 LENGTH	D4 NO.	D5 LENGTH	D5 NO.	G LENGTH	G NO.	QUANTITIES STANDARD REINF. STEEL LB.	STANDARD CONC. CU.YD.	W/ATT'CH APRON REINF. STEEL LB.	W/ATT'CH APRON CONC. CU.YD.
1	—	—	—	—	—	—	—	—	—	—	—	—	—	—	—	—	—	—	—	—	—	—	—	—	—	—	—	—	—	—
2	5'-0	4'-0	3'-6	1'-10½	4'-4	17	4'-2	12	2'-0	4	4'-4	4	4'-2	4	4'-11	5	4'-10	2	4'-9	2	4'-8	2	4'-7	5	3'-4	4	272	1.963	542	4.180
3	5'-6	4'-6	↑	↑	↑	17	↑	12	↑	↑	↑	↑	↑	↑	5'-5	↑	5'-4	↑	5'-3	↑	5'-2	↑	5'-1	↑	↑	4	280	2.114	550	4.331
4	6'-0	5'-0				19		14							5'-11		5'-10		5'-9		5'-8		5'-7			5	312	2.266	582	4.483
5	6'-6	5'-6				19		14							6'-5		6'-4		6'-3		6'-2		6'-1			5	320	2.417	590	4.634
6	7'-0	6'-0				21		16							6'-11		6'-10		6'-9		6'-8		6'-7			6	351	2.568	621	4.785
7	7'-6	6'-6				21		16							7'-5		7'-4		7'-3		7'-2		7'-1			6	359	2.719	629	4.936
8	8'-0	7'-0				23		18							7'-11		7'-10		7'-9		7'-8		7'-7			7	390	2.870	660	5.087
9	8'-6	7'-6	↓	↓	↓	23	↓	18	↓	↓	↓	↓	↓	↓	8'-5	↓	8'-4	↓	8'-3	↓	8'-2	↓	8'-1	↓	↓	7	399	3.022	669	5.239
10	9'-0	8'-0	3'-6	1'-10½	4'-4	25	4'-2	20	2'-0	4	4'-4	4	4'-2	4	8'-11	5	8'-10	2	8'-9	2	8'-8	2	8'-7	5	3'-4	8	430	3.173	700	5.390

NOTES:

1. FOR TYPICAL FLOOR PLAN SEE STD DWG CB 6G AND CB 6H
2. PLACE 1-"A" BAR OR 3-"A" BARS AT 3" SPACING ADJACENT TO OPENING IN TOP SLAB OF BOX DESCRIBED BY TABLE 1 AND TABLE 2, RESPECTIVELY. PLACE 5-"A" BARS AT 3" SPACING AS PREVIOUSLY DESCRIBED IN ALL OTHER TABLES. ALL ADDITIONAL BARS, WHERE APPLICABLE, ARE SPACED AT 1'-0 MAX.
3. THE OPTION- W/ATT'CH APRON IS BASED ON MODIFYING THE STANDARD BOX SHOWN. DELETE THE TOP SLAB WITH THE APPROPRIATE REINFORCING STEEL AND REPLACE IT WITH ONE OF THE APRONS SHOWN ON STD DWG CB 6E

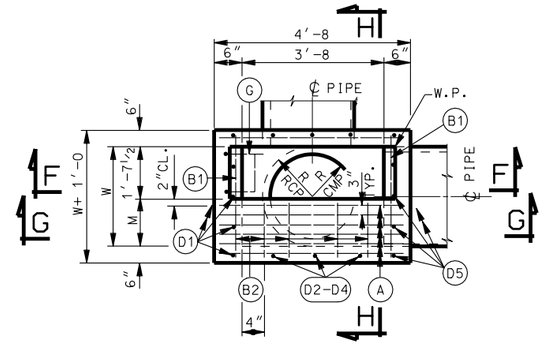

PLAN

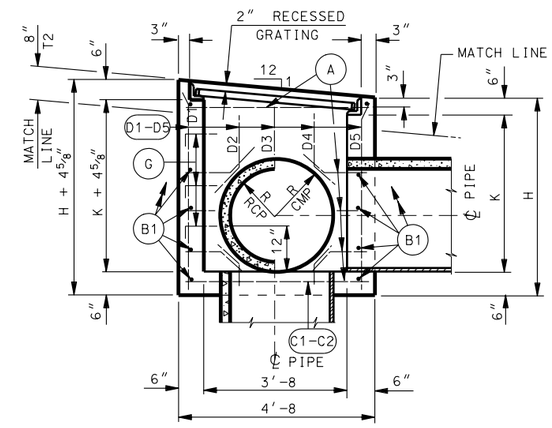

SECTION F-F

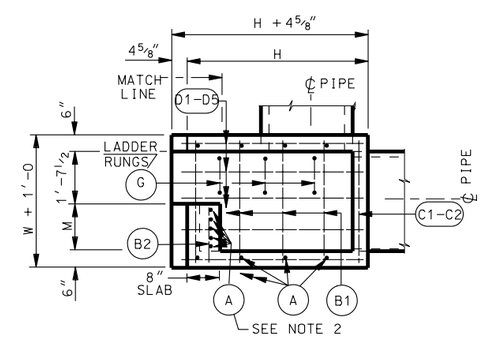

SECTION H-H

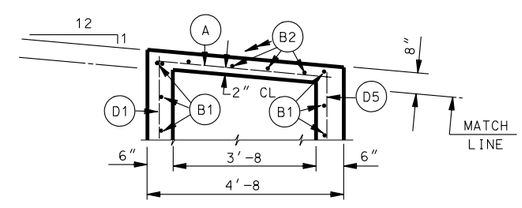

PARTIAL SECTION G-G

NO.	DATE	APPR.	REMARKS

REVISIONS

UTAH DEPARTMENT OF TRANSPORTATION
STANDARD DRAWINGS FOR ROAD AND BRIDGE CONSTRUCTION
SALT LAKE CITY, UTAH

RECOMMENDED FOR APPROVAL — JULY 03,2002 DATE
CHAIRMAN STANDARDS COMMITTEE APPROVED — JULY 03,2002 DATE
DEPUTY DIRECTOR

STANDARD CATCH BASIN AND CLEANOUT BOX DROP INLET TYPE "C" DETAILS

STANDARD DRAWING TITLE

STD DWG
CB 6D

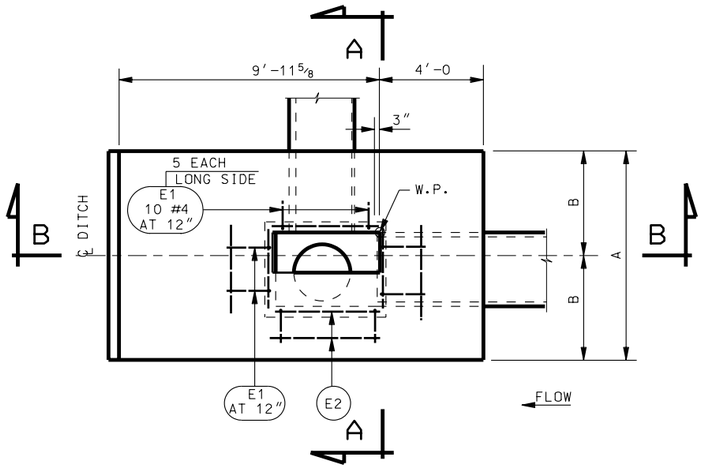

PLAN

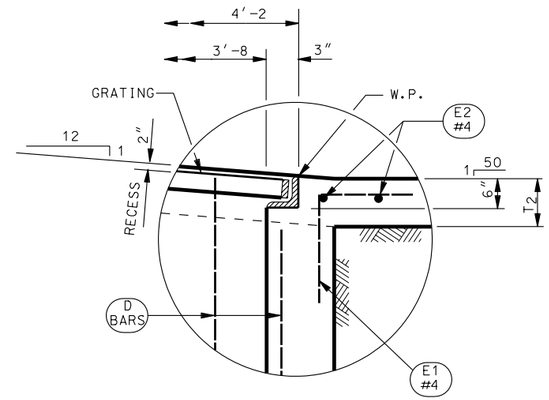

DETAIL "C"

NOTES:

1. EACH LINE REPRESENTS ONE COMPLETE STRUCTURE OF THE KIND SPECIFIED. LINE AND TABLE NUMBERS WITHIN THE DRAWING SET CORRESPOND. BASIC DROP INLET BOX DIMENSIONS AND REINFORCEMENT DETAILS BELOW MATCH LINE ARE GIVEN IN TABLES 1 THRU 4, AND TABLES 5 THRU 9 OF THE TYPE SPECIFIED. EXTEND ALL WALL REBAR INTO ATTACHED APRON.
2. ALL BARS (INCLUDING 3 #4 BARS) ARE STRAIGHT UNLESS OTHERWISE SHOWN.
3. FOR M, M1 AND M2 DIMENSIONS SEE TYPE "C" AND "D" DIMENSIONS SCHEDULES STD DWG CB 6D AND CB 6H.

APRON DIMENSIONS

TABLE NO.	T_2	A	B
1 THRU 4	8″	8′-0	4′-0
5	9″	8′-0	4′-0
6	9″	9′-4 1/2	4′-8 1/4
7	10″	10′-4 1/2	5′-2 1/4
8	10″	11′-4 1/2	5′-8 1/4
9	10″	12′-4 1/2	6′-2 1/4

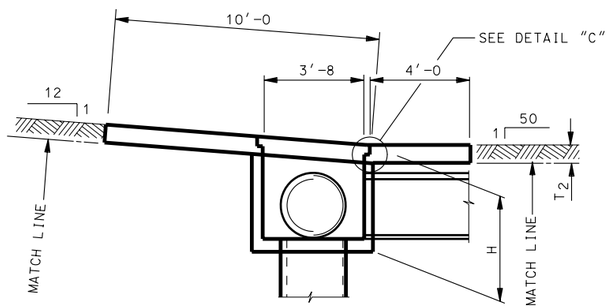

SECTION B-B

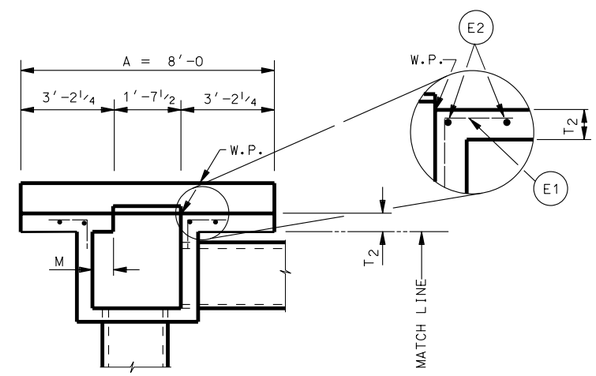

SECTION A-A

APRON OPTION DETAILS
(DROP INLET TYPE "C")

APRON REINFORCING STEEL SCHEDULE

APRON TO BE USED WITH TABLES 1 THRU 4				
MARK	NO.	LENGTH	TOTAL LENGTH	TOTAL WT. PER APRON
C1	16	7′-8	122′-8	301 LB.
C2	6	2′-10	17′-0	
D1	8	13′-8	109′-4	
D2	1	5′-9	5′-9	
D3	1	3′-11	3′-11	
E1	14	2′-4	32′-8	
E2	2	3′-8	7′-4	
E3	2	3′-0	6′-0	

APRON TO BE USED WITH TABLE 5				
MARK	NO.	LENGTH	TOTAL LENGHTH	TOTAL WT. PER APRON
C1	16	7′-8	122′-8	306 LB.
C2	6	2′-10	17′-0	
D1	8	13′-8	109′-4	
D2	1	5′-9	5′-9	
D3	1	3′-11	3′-11	
E1	16	2′-4	37′-4	
E2	2	4′-0	8′-0	
E3	2	4′-0	8′-0	

APRON TO BE USED WITH TABLE 6				
MARK	NO.	LENGTH	TOTAL LENGTH	TOTAL WT. PER APRON
C1	16	9′-0	144′-0	341 LB.
C2	6	3′-6	21′-0	
D1	10	13′-8	136′-8	
D2	1	5′-9	5′-9	
D3	1	3′-11	3′-11	
E1	20	2′-4	46′-8	
E2	2	5′-0	10′-0	
E3	2	5′-0	10′-0	

APRON TO BE USED WITH TABLE 7				
MARK	NO.	LENGTH	TOTAL LENGTH	TOTAL WT. PER APRON
C1	16	10′-0	160′-0	397 LB.
C2	6	4′-0	24′-0	
D1	10	13′-8	136′-8	
D2	1	5′-9	5′-9	
D3	1	3′-11	3′-11	
E1	24	2′-4	56′-0	
E2	2	5′-6	11′-0	
E3	2	5′-6	11′-0	

APRON TO BE USED WITH TABLE 8				
MARK	NO.	LENGTH	TOTAL LENGTH	TOTAL WT. PER APRON
C1	16	11′-0	176′-0	418 LB.
C2	6	4′-6	27′-0	
D1	10	13′-8	136′-8	
D2	1	5′-9	5′-9	
D3	1	3′-11	3′-11	
E1	24	2′-4	56′-0	
E2	2	6′-0	12′-0	
E3	2	6′-0	12′-0	

APRON TO BE USED WITH TABLE 9				
MARK	NO.	LENGTH	TOTAL LENGTH	TOTAL WT. PER APRON
C1	16	12′-0	192′-0	474 LB.
C2	6	5′-0	30′-0	
D1	12	13′-8	164′-0	
D2	1	5′-9	5′-9	
D3	1	3′-11	3′-11	
E1	28	2′-4	65′-4	
E2	2	6′-6	13′-0	
E3	2	6′-6	13′-0	

E1 BAR

NO.	DATE	APPR.	REMARKS

REVISIONS

UTAH DEPARTMENT OF TRANSPORTATION
STANDARD DRAWINGS FOR ROAD AND BRIDGE CONSTRUCTION
SALT LAKE CITY, UTAH

RECOMMENDED FOR APPROVAL — JULY 03,2002 DATE

CHAIRMAN STANDARDS COMMITTEE APPROVED — JULY 03,2002 DATE

DEPUTY DIRECTOR

STANDARD CATCH BASIN AND CLEANOUT BOX DROP INLET WITH ATTACHED APRON DETAILS

STANDARD DRAWING TITLE

STD DWG
CB 6E

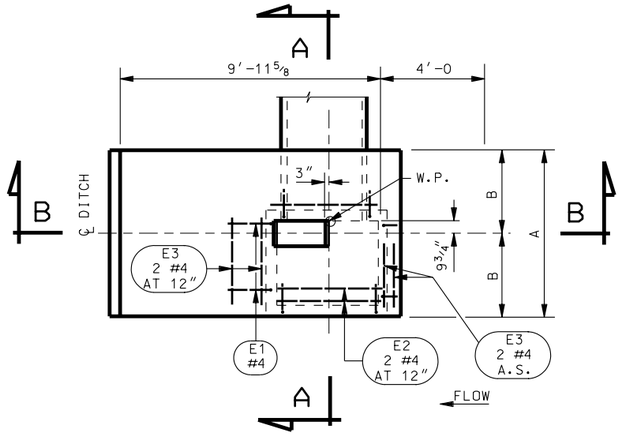

PLAN

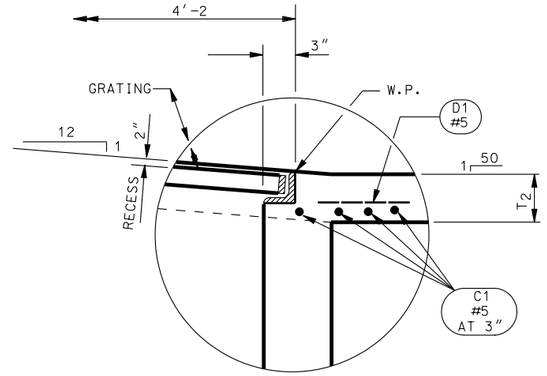

DETAIL "C"

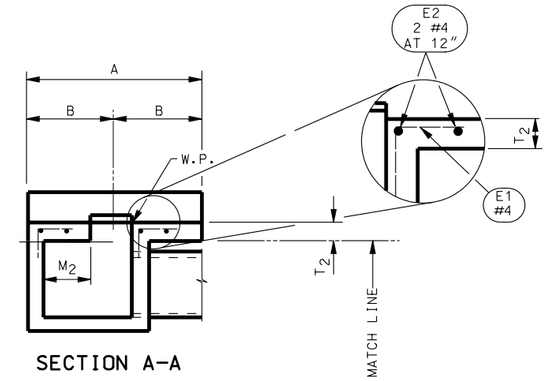

SECTION A-A

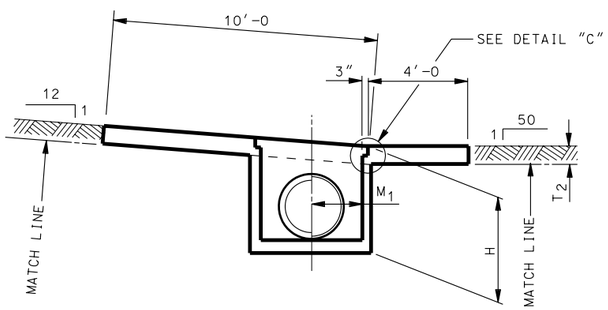

SECTION B-B

NOTE:
REFER TO STD DWG CB 6E FOR NOTES.

APRON OPTION DETAILS
(DROP INLET TYPE "D")

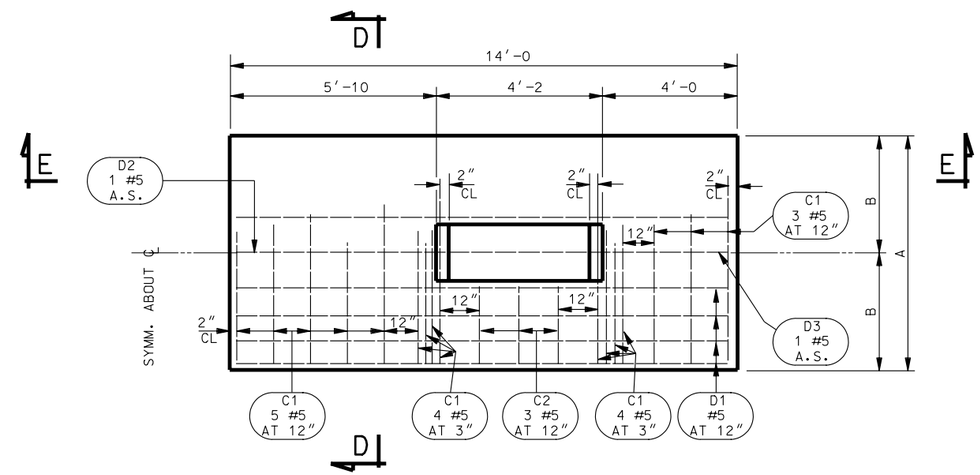

TYP. APRON PLAN
(REBAR PLACEMENT DETAILS)

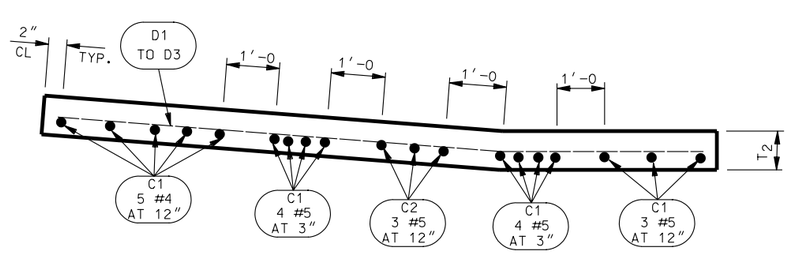

SECTION B-B

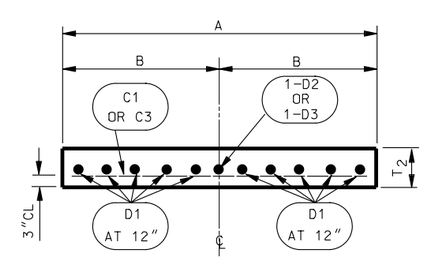

SECTION D-D

NO.	DATE	APPR.	REVISIONS	REMARKS

UTAH DEPARTMENT OF TRANSPORTATION
STANDARD DRAWINGS FOR ROAD AND BRIDGE CONSTRUCTION
SALT LAKE CITY, UTAH

RECOMMENDED FOR APPROVAL — JULY 03,2002 DATE

CHAIRMAN STANDARDS COMMITTEE APPROVED — JULY 03,2002 DATE

DEPUTY DIRECTOR

STANDARD CATCH BASIN AND CLEANOUT BOX DROP INLET WITH ATTACH APRON DETAILS
STANDARD DRAWING TITLE

STD DWG
CB 6F

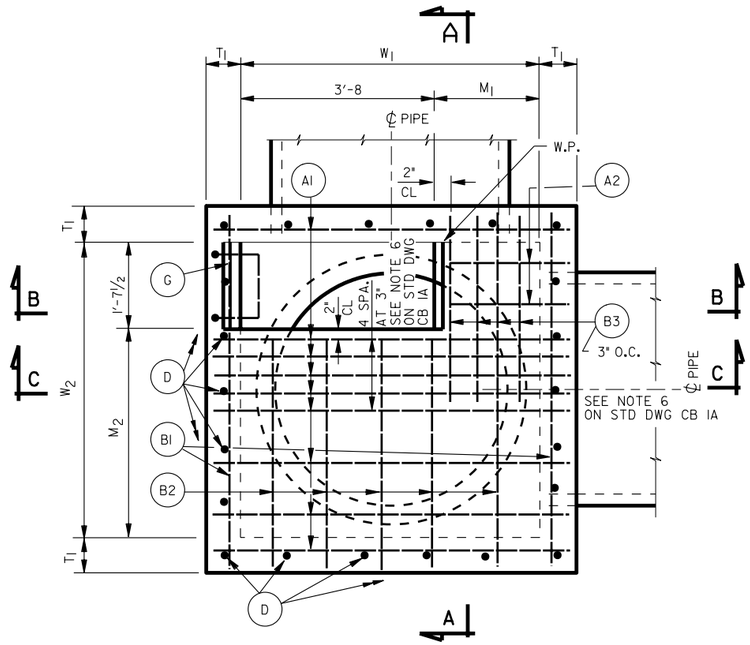

PLAN

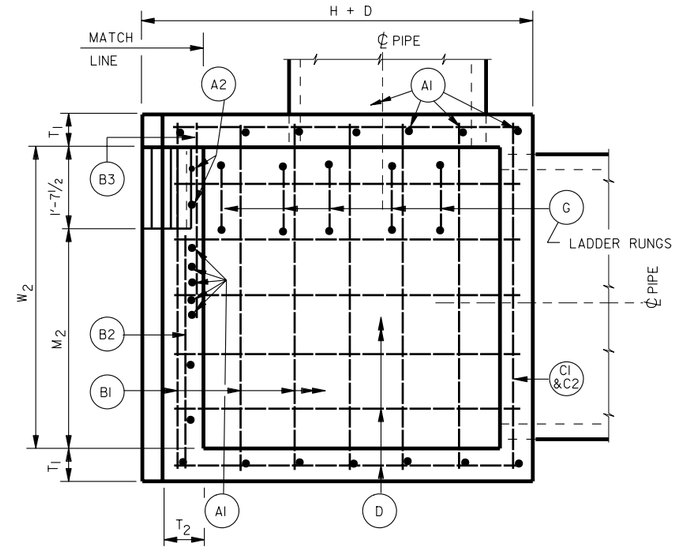

SECTION A-A

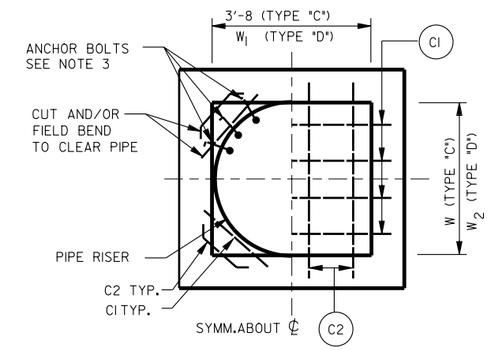

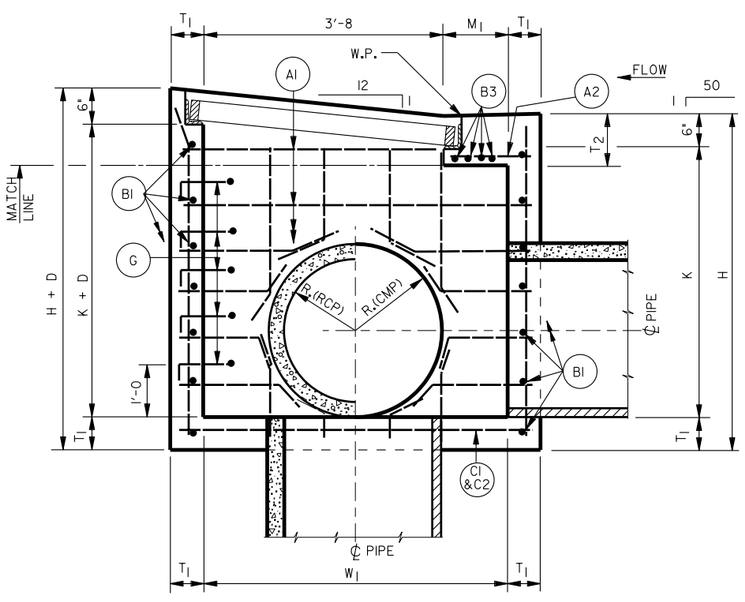

SECTION B-B

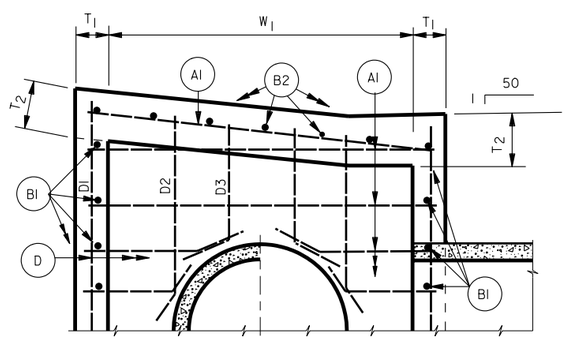

PARTIAL SECTION C-C

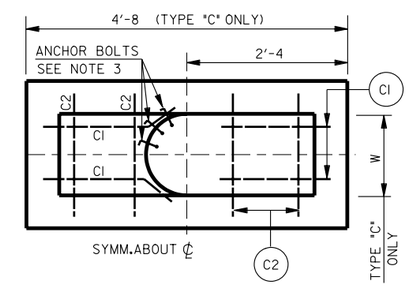

TYP. FLOOR PLAN WITH/ WITHOUT PIPE RISER

(DROP INLET FOR TYPE "C" & "D")

NOTES:

1. FOR REINFORCING STEEL AND CONCRETE QUANTITIES SEE STD DWG CB 6H
2. PLACE 5-A1 AND 5-B3 BARS AT 3" SPACING FROM OPENING IN TOP SLAB OF EACH BOX. SPACE ALL ADDITIONAL BARS, WHERE REQUIRED, AT 12" MAX.O.C. IN TABLE #5 ONLY 1-B3 BAR IS REQUIRED FOR EACH BOX. SPACE ALL OTHER BARS AS PREVIOUSLY DESCRIBED.
3. PLACE IN FLOOR OF BOX AROUND THE PERIPHERY OF EACH CMP RISER. STANDARD ANCHOR BOLTS ¾" x 6" ON 24 INCH CENTERS. POSITION ANCHOR BOLTS 3" FROM END OF RISER. ANCHOR BOLTS AND NUTS: CONFORM TO ASTM SPECIFICATION A 307 AND A 563, GRADE C, RESPECTIVELY. INCLUDE PAYMENT FOR FURNISHING AND PLACING ANCHOR BOLTS AND NUTS IN THE PRICE PER LINEAR FOOT OF PIPE.

NO.	DATE	APPR.	REMARKS

REVISIONS

UTAH DEPARTMENT OF TRANSPORTATION
STANDARD DRAWINGS FOR ROAD AND BRIDGE CONSTRUCTION
SALT LAKE CITY, UTAH

RECOMMENDED FOR APPROVAL — JULY 03,2002 DATE

CHAIRMAN STANDARDS COMMITTEE APPROVED — JULY 03,2002 DATE

DEPUTY DIRECTOR

STANDARD DRAWING TITLE

STANDARD CATCH BASIN AND CLEANOUT BOX DROP INLET TYPE "D" DETAILS

STD DWG

CB 6G

TABLE #5

MAX. PIPE SIZES : 42" DIA. RCP OR 48" DIA. CMP D = 5", T_1 = 6", T_2 = 9"

LINE NO	DIMENSIONS H	K	W_1	M_1	W_2	M_2	A1 LENGTH	A1 NO	A2 LENGTH	A2 NO	B1 LENGTH	B1 NO	B2 LENGTH	B2 NO	B3 LENGTH	B3 NO	C1 LENGTH	C1 NO	C2 LENGTH	C2 NO	D1 LENGTH	D1 NO	D2 LENGTH	D2 NO	D3 LENGTH	D3 NO	D4 LENGTH	D4 NO	D5 LENGTH	D5 NO	D6 LENGTH	D6 NO	D7 LENGTH	D7 NO	D8 LENGTH	D8 NO	G LENGTH	G NO	QUANTITIES STANDARD REINF. STEEL LB.	STANDARD CONC. CU.YD.	W/ATT'CH APRON REINF. STEEL LB.	W/ATT'CH APRON CONC. CU.YD.
1	5'-6	4'-6	4'-0	0'-4	4'-0	2'-4½	4'-8	18			4'-8	12	2'-6	4	3'-0	1	4'-8	4	4'-8	4	5'-6	5	5'-5	2	5'-4	2	5'-3	2	5'-2	5							3'-4	4	308	2.464	578	4.851
2	6'-0	5'-0	↑	↑	↑	↑	↑	20			↑	14	↑	↑	↑	↑	↑	↑	↑	↑	6'-0	↑	5'-11	↑	5'-10	↑	5'-9	↑	5'-8	↑							↑	4	325	2.631	595	5.018
3	6'-6	5'-6						20				14									6'-6		6'-5		6'-4		6'-3		6'-2									5	349	2.797	619	5.184
4	7'-0	6'-0						22				16									7'-0		6'-11		6'-10		6'-9		6'-8									5	377	2.964	647	5.351
5	7'-6	6'-6						22				16									7'-6		7'-5		7'-4		7'-3		7'-2									6	390	3.131	660	5.518
6	8'-0	7'-0						24				18									8'-0		7'-11		7'-10		7'-9		7'-8									6	418	3.297	688	5.684
7	8'-6	7'-6	↓	↓	↓	↓		24				18	↓	↓	↓	↓	↓	↓	↓	↓	8'-6	↓	8'-5	↓	8'-4	↓	8'-3	↓	8'-2	↓								7	431	3.464	701	5.851
8	9'-0	8'-0	4'-0	0'-4	4'-0	2'-4½	4'-8	26			4'-8	20	2'-6	4	3'-0	1	4'-8	4	4'-8	4	9'-0	5	8'-11	2	8'-10	2	8'-9	2	8'-8	5							3'-4	7	459	3.631	729	6.018

TABLE #6

CU.YD.

MAX. PIPE SIZES : 48" DIA. RCP OR 60" DIA. CMP D = 6", T_1 = 6", T_2 = 9"

LINE NO	DIMENSIONS H	K	W_1	M_1	W_2	M_2	A1 LENGTH	A1 NO	A2 LENGTH	A2 NO	B1 LENGTH	B1 NO	B2 LENGTH	B2 NO	B3 LENGTH	B3 NO	C1 LENGTH	C1 NO	C2 LENGTH	C2 NO	D1 LENGTH	D1 NO	D2 LENGTH	D2 NO	D3 LENGTH	D3 NO	D4 LENGTH	D4 NO	D5 LENGTH	D5 NO	D6 LENGTH	D6 NO	D7 LENGTH	D7 NO	D8 LENGTH	D8 NO	G LENGTH	G NO	QUANTITIES STANDARD REINF. STEEL LB.	STANDARD CONC. CU.YD.	W/ATT'CH APRON REINF. STEEL LB..	W/ATT'CH APRON CONC. CU.YD.
1	6'-6	5'-6	5'-0	1'-4	5'-0	3'-4½	5'-8	21	1'-5	2	5'-8	14	3'-6	5	3'-0	5	5'-8	4	5'-8	4	6'-6	6	6'-5	2	6'-4	2	6'-3	2	6'-2	2	6'-1	6					3'-4	5	447	3.729	713	3.345
2	7'-0	6'-0	↑	↑	↑	↑	↑	23	↑	↑	↑	16	↑	↑	↑	↑	↑	↑	↑	↑	7'-0	↑	6'-11	↑	6'-10	↑	6'-9	↑	6'-8	↑	6'-7	↑					↑	5	481	3.933	747	6.549
3	7'-6	6'-6						23				16									7'-6		7'-5		7'-4		7'-3		7'-2		7'-1							6	497	4.136	763	6.752
4	8'-0	7'-0						25				18									8'-0		7'-11		7'-10		7'-9		7'-8		7'-7							6	530	4.340	796	6.956
5	8'-6	7'-6	↓	↓	↓	↓		25	↓	↓	↓	18	↓	↓	↓	↓	↓	↓	↓	↓	8'-6	↓	8'-5	↓	8'-4	↓	8'-3	↓	8'-2	↓	8'-1	↓						7	546	4.544	812	7.160
6	9'-0	8'-0	5'-0	1'-4	5'-0	3'-4½	5'-8	27	1'-5	2	5'-8	20	3'-6	5	3'-0	5	5'-8	4	5'-8	4	9'-0	6	8'-11	2	8'-10	2	8'-9	2	8'-8	2	8'-7	6					3'-4	7	580	4.748	846	7.364

TABLE #7

MAX. PIPE SIZES : 54" DIA. RCP OR 66" DIA CMP D = 6½", T_1 = 6", T_2 = 10"

LINE NO	DIMENSIONS H	K	W_1	M_1	W_2	M_2	A1 LENGTH	A1 NO	A2 LENGTH	A2 NO	B1 LENGTH	B1 NO	B2 LENGTH	B2 NO	B3 LENGTH	B3 NO	C1 LENGTH	C1 NO	C2 LENGTH	C2 NO	D1 LENGTH	D1 NO	D2 LENGTH	D2 NO	D3 LENGTH	D3 NO	D4 LENGTH	D4 NO	D5 LENGTH	D5 NO	D6 LENGTH	D6 NO	D7 LENGTH	D7 NO	D8 LENGTH	D8 NO	G LENGTH	G NO	QUANTITIES STANDARD REINF. STEEL LB.	STANDARD CONC. CU.YD.	W/ATT'CH APRON REINF. STEEL LB.	W/ATT'CH APRON CONC. CU.YD.
1	7'-0	6'-0	5'-6	1'-10	5'-6	3'-10½	6'-2	23	1'-11	2	6'-2	16	4'-0	6	3'-0	5	6'-2	4	6'-2	4	7'-1	7	7'-0	2	6'-11	2	6'-10	2	6'-9	2	6'-8	2	6'-7	7			3'-4	5	543	4.529	854	7.678
2	7'-6	6'-6	↑	↑	↑	↑	↑	23	↑	↑	↑	16	↑	↑	↑	↑	↑	↑	↑	↑	7'-7	↑	7'-6	↑	7'-5	↑	7'-4	↑	7'-3	↑	7'-2	↑	7'-1	↑			↑	6	561	4.751	872	7.900
3	8'-0	7'-0						25				18									8'-1		8'-0		7'-11		7'-10		7'-9		7'-8		7'-7					6	599	4.973	910	8.122
4	8'-6	7'-6	↓	↓	↓	↓		25	↓	↓	↓	18	↓	↓	↓	↓	↓	↓	↓	↓	8'-7	↓	8'-6	↓	8'-5	↓	8'-4	↓	8'-3	↓	8'-2	↓	8'-1	↓				7	616	5.196	927	8.345
5	9'-0	8'-0	5'-6	1'-10	5'-6	3'-10½	6'-2	27	1'-11	2	6'-2	20	4'-0	6	3'-0	5	6'-2	4	6'-2	4	9'-1	7	9'-0	2	8'-11	2	8'-10	2	8'-9	2	8'-8	2	8'-7	7			3'-4	7	655	5.418	966	8.567

TABLE #8

MAX. PIPE SIZES : 60" DIA. RCP OR 72" DIA. CMP D = 7", T_1 = 6", T_2 = 10"

LINE NO	DIMENSIONS H	K	W_1	M_1	W_2	M_2	A1 LENGTH	A1 NO	A2 LENGTH	A2 NO	B1 LENGTH	B1 NO	B2 LENGTH	B2 NO	B3 LENGTH	B3 NO	C1 LENGTH	C1 NO	C2 LENGTH	C2 NO	D1 LENGTH	D1 NO	D2 LENGTH	D2 NO	D3 LENGTH	D3 NO	D4 LENGTH	D4 NO	D5 LENGTH	D5 NO	D6 LENGTH	D6 NO	D7 LENGTH	D7 NO	D8 LENGTH	D8 NO	G LENGTH	G NO	QUANTITIES STANDARD REINF. STEEL LB.	STANDARD CONC. CU.YD.	W/ATT'CH APRON REINF. STEEL LB.	W/ATT'CH APRON CONC. CU.YD.
1	7'-6	6'-6	6'-0	2'-4	6'-0	4'-4½	6'-8	24	2'-5	2	6'-8	16	4'-6	6	3'-0	6	6'-8	4	6'-8	4	7'-7	7	7'-6	2	7'-5	2	7'-4	2	7'-3	2	7'-2	2	7'-1	7			3'-4	6	599	5.334	909	8.707
2	8'-0	7'-0	↑	↑	↑	↑	↑	26	↑	↑	↑	18	↑	↑	↑	↑	↑	↑	↑	↑	8'-1	↑	8'-0	↑	7'-11	↑	7'-10	↑	7'-9	↑	7'-8	↑	7'-7	↑			↑	6	640	5.575	950	8.948
3	8'-6	7'-6	↓	↓	↓	↓	↓	26	↓	↓	↓	18	↓	↓	↓	↓	↓	↓	↓	↓	8'-7	↓	8'-6	↓	8'-5	↓	8'-4	↓	8'-3	↓	8'-2	↓	8'-1	↓			↓	7	657	5.816	967	9.189
4	9'-0	8'-0	6'-0	2'-4	6'-0	4'-4½	6'-8	28	2'-5	2	6'-8	20	4'-6	6	3'-0	6	6'-8	4	6'-8	4	9'-1	7	9'-0	2	8'-11	2	8'-10	2	8'-9	2	8'-8	2	8'-7	7			3'-4	7	698	6.056	1008	9.429

TABLE #9

MAX. PIPE SIZES : 66" DIA. RCP OR 78" DIA. CMP D = 7½" T_1 = 6" T_2 = 10"

LINE NO	DIMENSIONS H	K	W_1	M_1	W_2	M_2	A1 LENGTH	A1 NO	A2 LENGTH	A2 NO	B1 LENGTH	B1 NO	B2 LENGTH	B2 NO	B3 LENGTH	B3 NO	C1 LENGTH	C1 NO	C2 LENGTH	C2 NO	D1 LENGTH	D1 NO	D2 LENGTH	D2 NO	D3 LENGTH	D3 NO	D4 LENGTH	D4 NO	D5 LENGTH	D5 NO	D6 LENGTH	D6 NO	D7 LENGTH	D7 NO	D8 LENGTH	D8 NO	G LENGTH	G NO	QUANTITIES STANDARD REINF. STEEL LB.	STANDARD CONC. CU.YD.	W/ATT'CH APRON REINF. STEEL LB.	W/ATT'CH APRON CONC. CU.YD.
1	8-0	7'-0	6'-6	2'-10	6'-6	4'-10½	7'-2	26	2'-11	2	7'-2	18	5'-0	7	3'-0	6	7'-2	4	7'-2	4	8'-2	8	8'-1	2	8'-0	2	7'-11	2	7'-10	2	7'-9	2	7'-8	2	7'-7	8	3'-4	6	710	6.198	1061	9.779
2	8'-6	7'-6	6'-6	2'-10	6'-6	4'-10½	7'-2	26	2'-11	2	7'-2	18	5'-0	7	3'-0	6	7'-2	4	7'-2	4	8'-8	8	8'-7	2	8'-6	2	8'-5	2	8'-4	2	8'-3	2	8'-2	2	8'-1	8	3'-4	7	730	6.457	1081	10.038
3	9'-0	8'-0	6'-6	2'-10	6'-6	4'-10½	7'-2	28	2'-11	2	7'-2	20	5'-0	7	3'-0	6	7'-2	4	7'-2	4	9'-2	8	9'-1	2	9'-0	2	8'-11	2	8'-10	2	8'-9	2	8'-8	2	8'-7	8	3'-4	7	774	6.716	1125	10.297

REVISIONS

NO.	DATE	APPR.	REMARKS

UTAH DEPARTMENT OF TRANSPORTATION
STANDARD DRAWINGS FOR ROAD AND BRIDGE CONSTRUCTION
SALT LAKE CITY, UTAH

RECOMMENDED FOR APPROVAL — JULY 03,2002 DATE
CHAIRMAN STANDARDS COMMITTEE APPROVED — JULY 03,2002 DATE
DEPUTY DIRECTOR

STANDARD CATCH BASIN AND CLEANOUT BOX DROP INLET TYPE "D" TABLES

STANDARD DRAWING TITLE

STD DWG
CB 6H

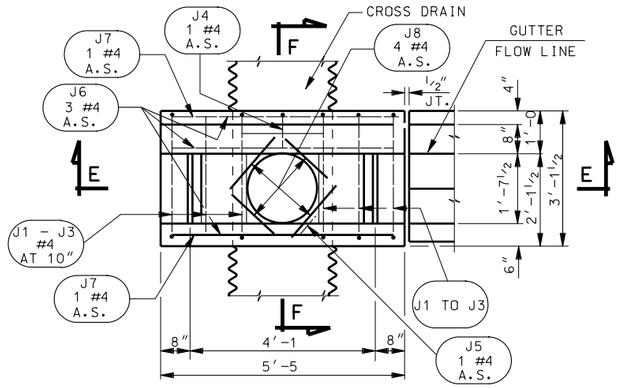

DROP INLET TYPE "J" PLAN

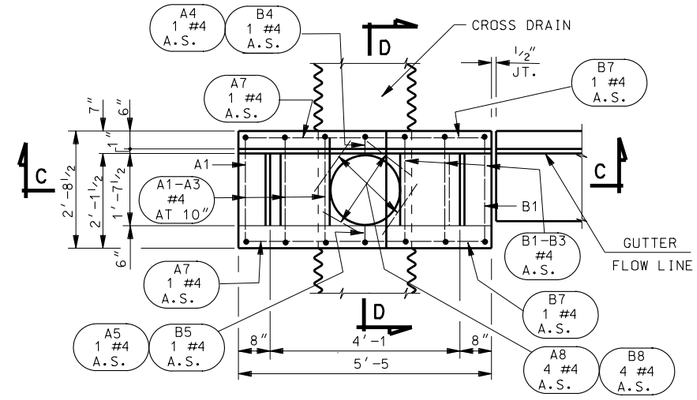

DROP INLET TYPE "A" & "B" PLAN

NOTES:

1. USE COATED DEFORMED BILLET REINFORCING STEEL BARS CONFORMING TO AASHTO M 284 OR M 111 AND M 31 GRADE 60 RESPECTIVELY.
2. PREFORMED JOINT FILLER: ASSHTO DESIGNATION M 213.
3. DROP INLET TYPE TO CORRESPOND WITH CURB TYPE SELECTED ON STD DWG GW 2.
4. NOT FOR USE WITH EITHER CORRUGATED POLYETHYLENE PIPE OR VITRIFIED CLAY PIPE.
5. USE GRATING AND BEARING ANGLES AS DESCRIBED ON STD DWG GF 3 IN STOP SLAB OPENING. (GRATING NOT SHOWN)
6. STANDARD ANCHOR BOLTS 3/4" x 6" REQUIRED. SPACE 19" ± ON PERIPHERY OF PIPE AND POSITION ANCHOR BOLTS 2" FROM END OF PIPE RISER. GALVANIZE ANCHOR BOLTS AND NUTS .
7. UNLESS OTHERWISE SHOWN WITHIN THE SCHEDULES, ALL DIMENSIONS ARE OUT TO OUT OF BAR.
8. CHAMFER ALL EXPOSED CONCRETE CORNERS 3/4" EXCEPT WHERE SPECIFIED OTHERWISE.
9. USE TYPE II CEMENT (LOW ALKALI) .

DESIGN DATA

HS 20 - 44 OR INTERSTATE ALTERNATE LOADING IN ACCORDANCE WITH CURRENT AASHTO AND INTERIM SPECIFICATIONS.
fc = 1,400 psi
fs = 24,000 psi
n = 8

QUANTITIES

(SEE SCHEDULE FOR APPROPRIATE QUANTITIES)

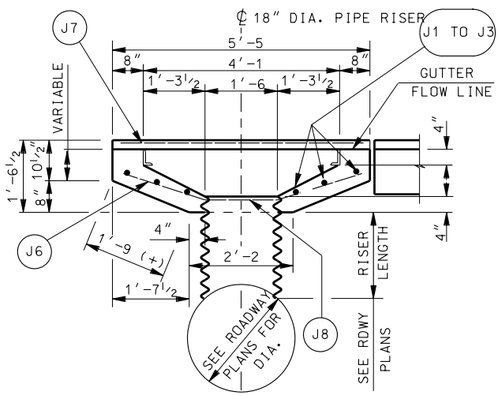

SECTION E-E

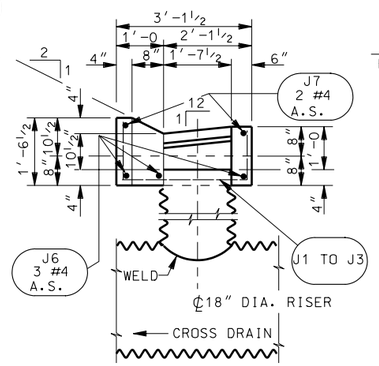

SECTION F-F

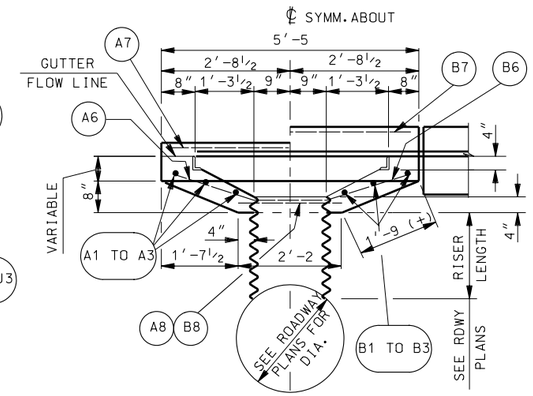

SECTION C-C

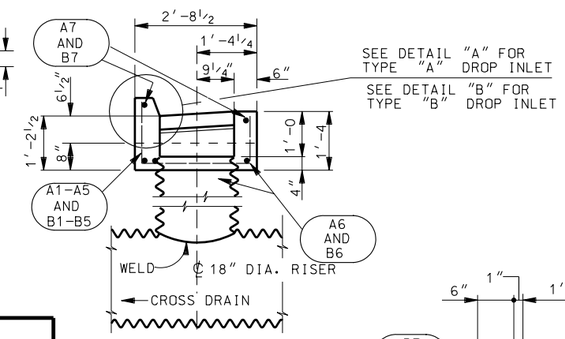

SECTION D-D

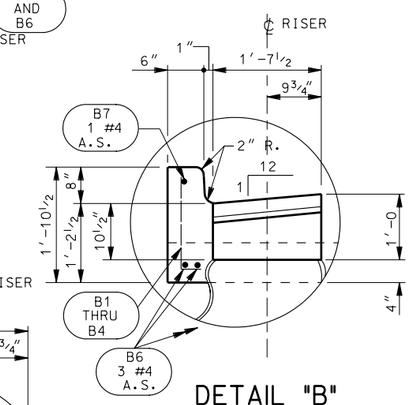

DETAIL "B"

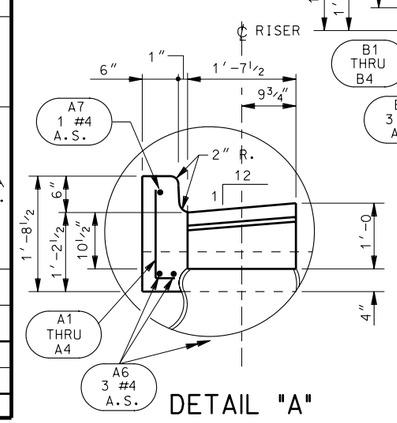

DETAIL "A"

LOC.	MARK	SIZE	NO. BARS	LENGTH	TOTAL LENGTH	A	B
DROP INLET TYPE "J"	J1	4	2	4'-11	25'-6	1'-2	1'-0
	J2		2	4'-3		0'-10	0'-8
	J3		2	3'-7		0'-6	0'-4
	J4		1	2'-0	2'-0	1'-2	0'-10
	J5		1	1'-6	1'-6	1'-0	0'-6
	J6		3	5'-4	16'-0		
	J7		2	5'-1	10'-2		
	J8	4	4	1'-9	7'-0		

1 SET (J1-J3) = 12'-9

62'-2 OF #4 BARS AT 0.668 LBS./FT. = 41.5 LBS.

QUANT.: CONCRETE CLASS AA (AE) 0.564 CU. YDS.
REINFORCING STEEL 42 LBS.

LOC.	MARK	SIZE	NO. BARS	LENGTH	TOTAL LENGTH	A	B
DROP INLET TYPE "A"	A1	4	2	4'-8	24'-0	1'-4	1'-0
	A2		2	4'-0		1'-0	0'-8
	A3		2	3'-4		0'-8	0'-4
	A4		1	1'-10	1'-10	1'-4	0'-6
	A5		1	1'-6	1'-6	1'-0	0'-6
	A6		3	5'-4	16'-0		
	A7		2	5'-1	10'-2		
	A8	4	4	1'-9	7'-0		

1 SET (A1-A3) = 12'-0

60'-6 OF #4 BARS AT 0.668 LBS./FT. = 40.4 LBS.

QUANT.: CONCRETE CLASS AA (AE) 0.407 CU. YDS.
REINFORCING STEEL 40 LBS.

LOC.	MARK	SIZE	NO. BARS	LENGTH	TOTAL LENGTH	A	B
DROP INLET TYPE "B"	B1	4	2	4'-10	25'-0	1'-6	1'-0
	B2		2	4'-2		1'-2	0'-8
	B3		2	3'-6		0'-10	0'-4
	B4		1	2'-0	2'-0	1'-6	0'-6
	B5		1	1'-6	1'-6	1'-0	0'-6
	B6		3	5'-4	16'-0		
	B7		2	5'-1	10'-2		
	B8	4	4	1'-9	7'-0		

1 SET (J1-J3) = 12'-6

61'-8 OF #4 BARS AT 0.668 LBS./FT. = 41.2 LBS.

QUANT.: CONCRETE CLASS AA (AE) 0.425 CU. YDS.
REINFORCING STEEL 41 LBS.

NO.	DATE	APPR.	REMARKS

REVISIONS

UTAH DEPARTMENT OF TRANSPORTATION
STANDARD DRAWINGS FOR ROAD AND BRIDGE CONSTRUCTION
SALT LAKE CITY, UTAH

RECOMMENDED FOR APPROVAL — JULY 03,2002 DATE
CHAIRMAN STANDARDS COMMITTEE APPROVED — JULY 03,2002 DATE
DEPUTY DIRECTOR

STANDARD DRAWING TITLE
STANDARD CURB AND GUTTER DROP INLET

STD DWG
CB 7

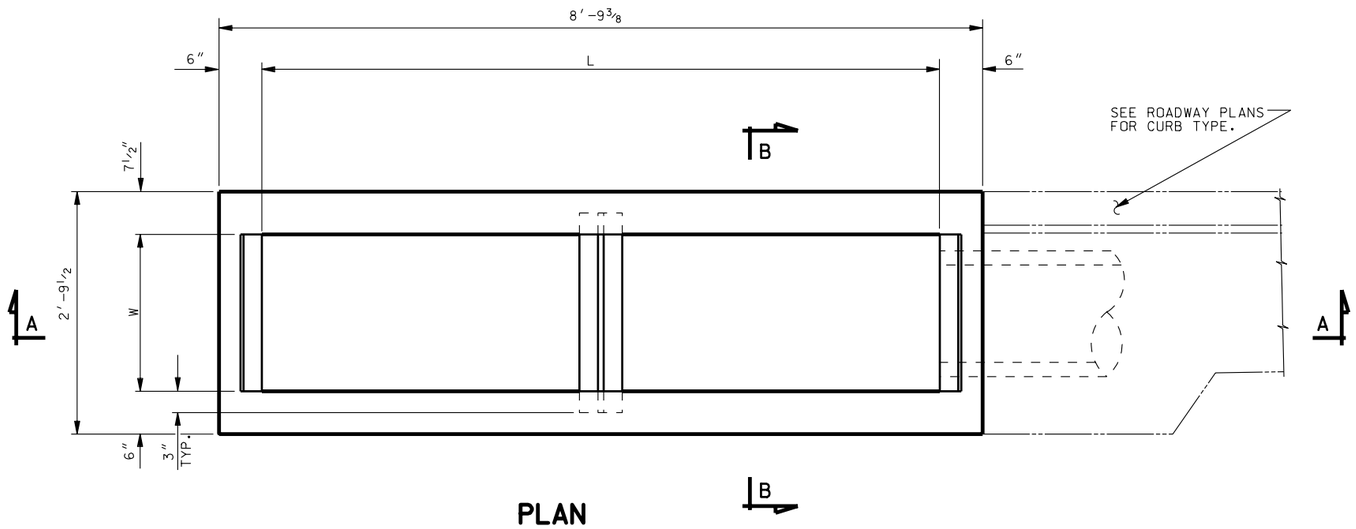

PLAN

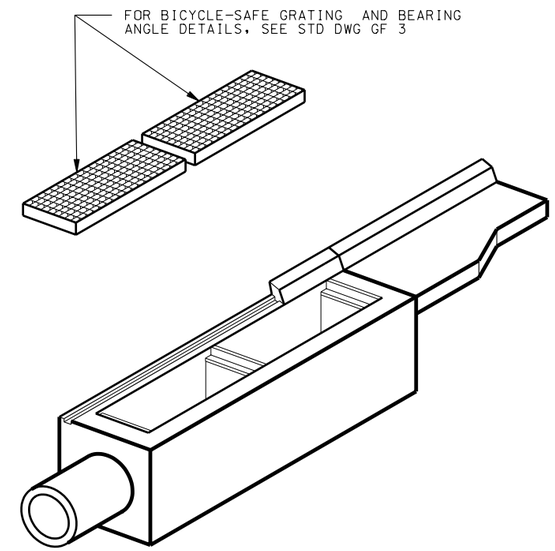

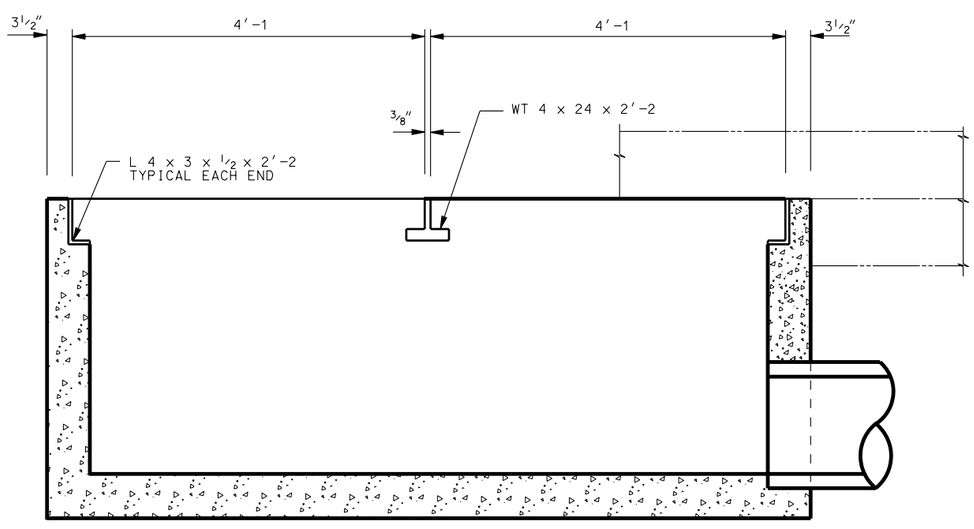

SECTION A-A

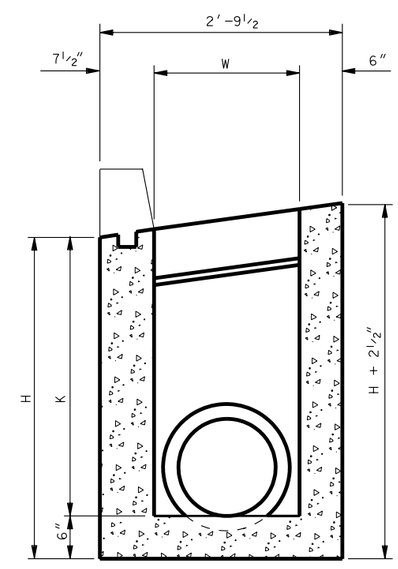

SECTION B-B

GENERAL NOTES FOR CB 8A TO CB 8B

1. USE COATED DEFORMED BILLET REINFORCING STEEL BARS CONFORMING TO AASHTO M 284 OR M 111 AND M 31 GRADE 60 RESPECTIVELY.
2. CHAMFER ALL EXPOSED CONCRETE CORNERS 3/4" EXCEPT WHERE NOTED OTHERWISE.
3. PROVIDE 2" CONCRETE COVER TO REINFORCING STEEL EXCEPT WHERE NOTED OTHERWISE.
4. USE STRUCTURAL CONCRETE FOR ALL CAST-IN-PLACE CONCRETE EXCEPT WHERE SPECIFIED OTHERWISE.
5. USE TYPE II CEMENT (LOW ALKALI) .
6. USE STRUCTURAL STEEL CONFORMING TO AASHTO M 270 GRADE 36 EXCEPT WHERE NOTED OTHERWISE.
7. SEE ROADWAY PLANS FOR LOCATION, SIZE AND PAYMENT OF PIPES.
8. HOT-DIP GALVANIZE GRATING AND BEARING ANGLES AFTER FABRICATION IN ACCORDANCE WITH AASHTO DESIGNATION M 111 (ASTM A 123).
9. USE CLASS AA(AE) CAST-IN-PLACE CONCRERE EXCEPT WHERE SPECIFIED OTHERWISE.

DESIGN DATA

HS 20-44 OR INTERSTATE ALTERNATE MILITARY LOADING IN ACCORDANCE WITH CURRENT AASHTO AND INTERIM SPECIFICATIONS.

STRUCTURAL CONCRETE: Fc = 1400 psi :
Fs (REINF.) = 24,000 psi n = 8.

QUANTITIES

SEE STD DWG CB 8B SCHEDULE OF INSTALLATION

REVISIONS

NO.	DATE	APPR.	REMARKS

UTAH DEPARTMENT OF TRANSPORTATION
STANDARD DRAWINGS FOR ROAD AND BRIDGE CONSTRUCTION
SALT LAKE CITY, UTAH

RECOMMENDED FOR APPROVAL — JULY 03,2002 DATE

CHAIRMAN STANDARDS COMMITTEE APPROVED — JULY 03,2002 DATE

DEPUTY DIRECTOR

STANDARD DRAWING TITLE: DOUBLE CATCH BASIN

STD DWG CB 8A

SCHEDULE OF INSTALLATION

LINE NO	DIMENSIONS				MAXIMUM PIPE DIA.		REINFORCING STEEL												QUANTITIES		
							A		B		C		D		E		F		REINFORCING STEEL	CONCRETE	STRUCTURAL STEEL
	H	W	L	K	R.C.P.	C.M.P.	N	LENGTH	N	LENGTH	N	LENGTH	N	LENGTH	N	LENGTH	N	LENGTH	LBS.	CUBIC YARD	LBS.
1	2'-0	1'-8	7'-9 3/8	1'-6	----	15"	7	8'-6	13	2'-5	9	1'-9	2	1'-8	9	2'-0	1	11'-0	145.0	1.14	594.0
2	2'-6	1'-8	7'-9 3/8	2'-0	12"	18"	9	8'-6	15	2'-5	9	2'-3	2	2'-2	9	2'-6	1	11'-0	178.2	1.33	594.0
3	3'-0	1'-8	7'-9 3/8	2'-6	15"	18"	9	8'-6	15	2'-5	9	2'-9	2	2'-8	9	3'-0	1	11'-0	188.6	1.52	594.0
4	3'-6	1'-8	7'-9 3/8	3'-0	18"	18"	11	8'-6	17	2'-5	9	3'-3	2	3'-2	9	3'-6	1	11'-0	221.8	1.71	594.0
5	4'-0	1'-8	7'-9 3/8	3'-6	18"	18"	11	8'-6	17	2'-5	9	3'-9	2	3'-8	9	4'-0	1	11'-0	232.2	1.90	594.0

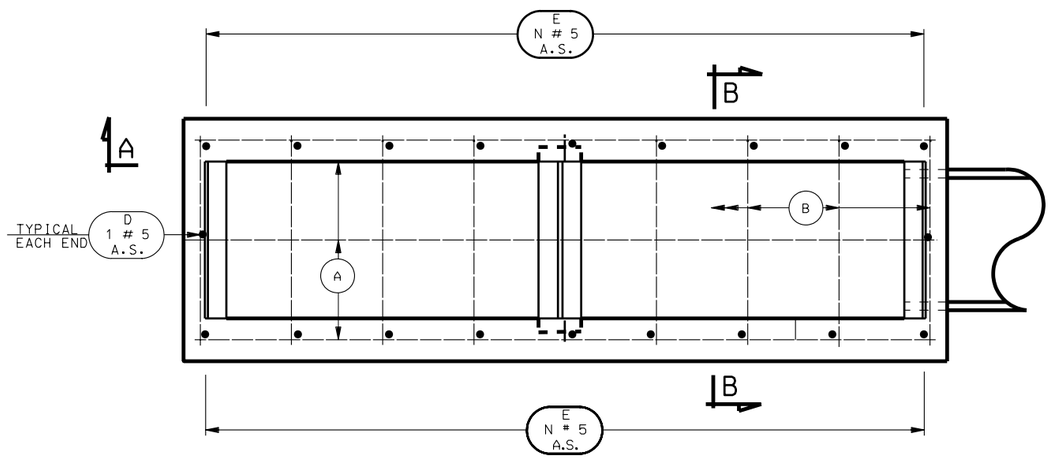

PLAN VIEW

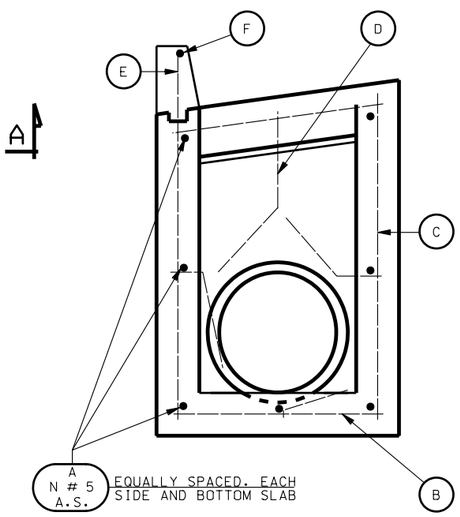

SECTION B-B

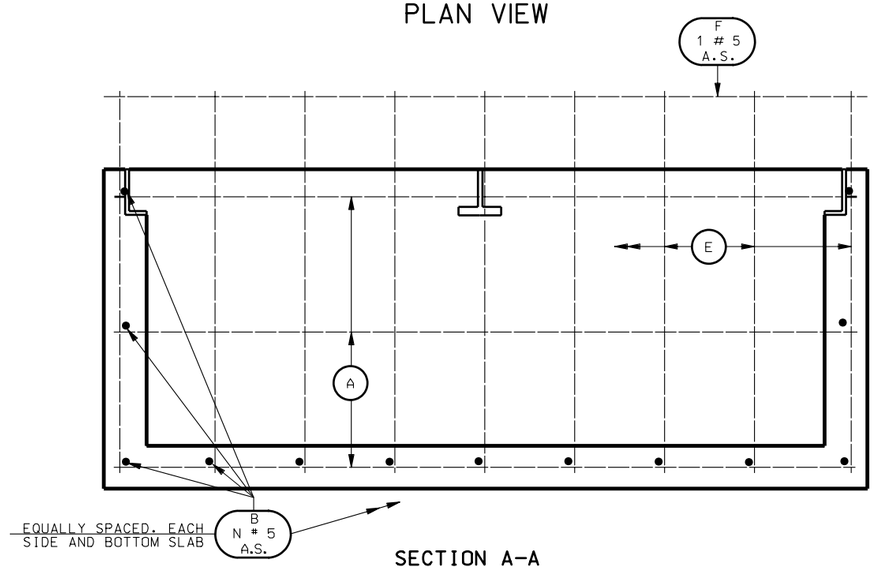

SECTION A-A

TABLE "A"

R.C.P.		C.M.P.	
DIA.	CU. YDS.	DIA.	CU. YDS.
12"	0.023	12"	0.015
15"	0.031	15"	0.023
18"	0.041	18"	0.033

NOTES:

1. INCLUDE CONCRETE QUANTITIES FOR CURB AND GUTTER IN ROADWAY QUANTITIES.
2. DEDUCT CONCRETE DISPLACED BY PIPE(S), TABLE "A", FROM CONCRETE QUANTITIES GIVEN IN SCHEDULE OF INSTALLATION.
3. CUT AND BEND REINFORCING STEEL AS NECESSARY TO CLEAR PIPE(S) AND MAINTAIN 2" CLEARANCE.

REVISIONS

NO.	DATE	APPR.	REMARKS

UTAH DEPARTMENT OF TRANSPORTATION
STANDARD DRAWINGS FOR ROAD AND BRIDGE CONSTRUCTION
SALT LAKE CITY, UTAH

RECOMMENDED FOR APPROVAL — JULY 03,2002 DATE

CHAIRMAN STANDARDS COMMITTEE APPROVED — JULY 03,2002 DATE

DEPUTY DIRECTOR

STANDARD DRAWING TITLE

DOUBLE CATCH BASIN

STD DWG

CB 8B

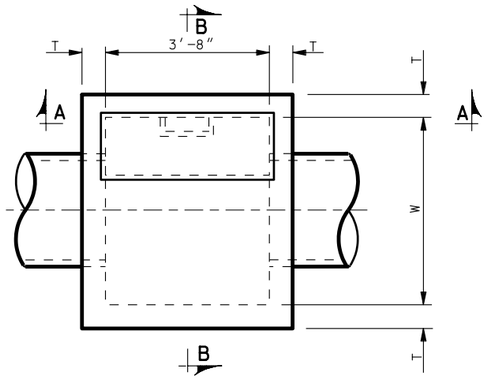

PLAN

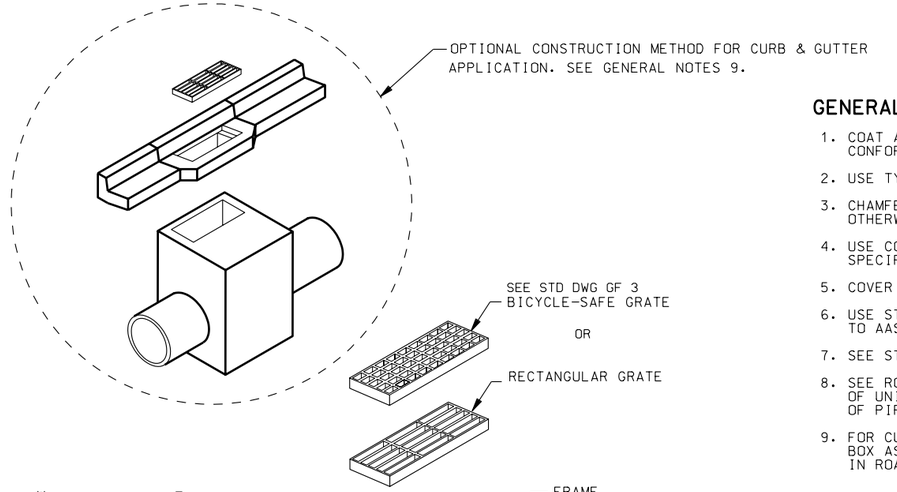

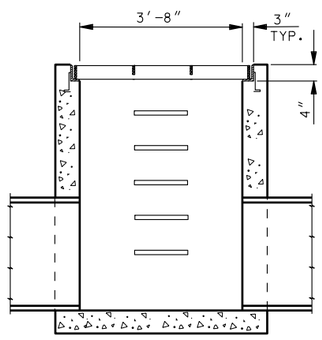

SECTION A-A

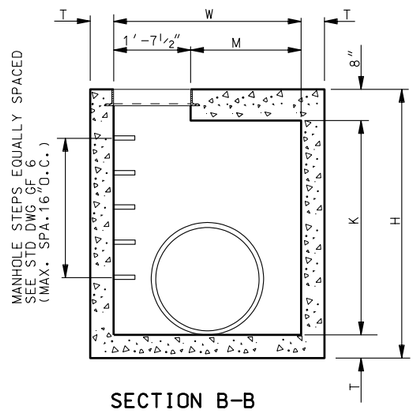

SECTION B-B

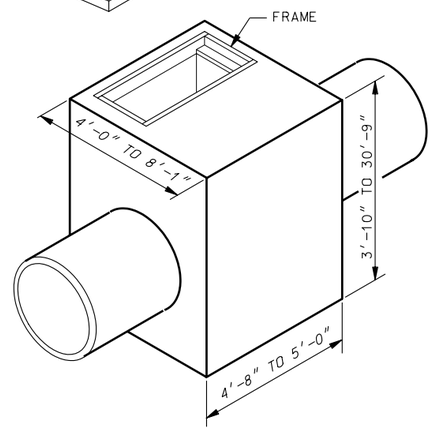

CATCH BASIN

GRATE AND FRAME APPLICATION

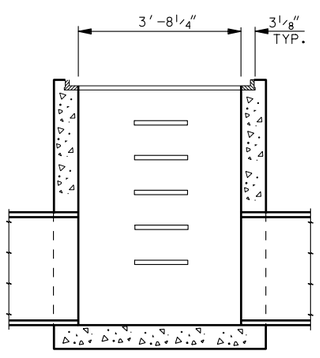

SECTION A-A

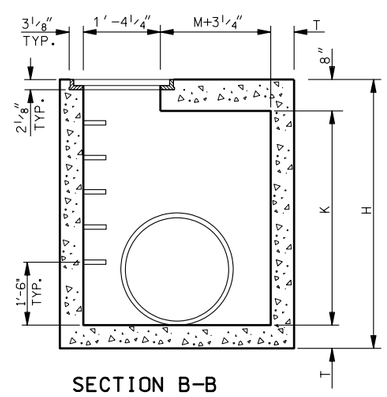

SECTION B-B

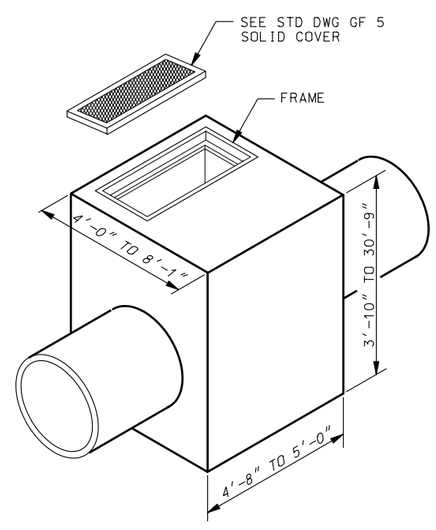

CLEANOUT BOX

SOLID COVER APPLICATION

GENERAL NOTES FOR CB 9A TO CB 9D

1. COAT ALL REINFORCING STEEL, DEFORMED BILLET-STEEL BARS CONFORMING TO AASHTO DESIGNATION M 31M, GRADE 60.
2. USE TYPE II CEMENT (LOW ALKALI) UNLESS SPECIFIED OTHERWISE.
3. CHAMFER ¾" ALL EXPOSED CONCRETE CORNERS EXCEPT WHERE NOTED OTHERWISE.
4. USE CONCRETE CLASS AA(AE) FOR ALL CAST-IN-PLACE CONCRETE EXCEPT WHERE SPECIFIED OTHERWISE.
5. COVER TO REINFORCING 2 inches: EXCEPT WHERE NOTED OTHERWISE.
6. USE STRUCTURAL CARBON STEEL FOR STRUCTURAL STEEL GRATING CONFORMING TO AASHTO DESIGNATION M 270, GRADE 36 (ASTM A 709, GRADE 36)
7. SEE STD DWG GF 3 AND GF 5 FOR GRATING, FRAME AND SOLID COVER DETAILS.
8. SEE ROADWAY PLANS FOR DETAILS OF INSTALLATION, INCLUDING LOCATION OF UNITS, NUMBER OF UNITS REQUIRED, TYPE OF UNITS, SIZE AND LOCATION OF PIPE(S).
9. FOR CURB & GUTTER APPLICATIONS ADJUST FINISH GRADE ELEVATION OF BOX AS REQUIRED. INCLUDE CONCRETE QUANTITIES FOR CURB & GUTTER IN ROADWAY QUANTITIES.

DESIGN DATA

MS 18 (HS-20) OR INTERSTATE ALTERNATE LOADING IN ACCORDANCE WITH CURRENT AASHTO AND INTERIM SPECIFICATIONS.

CAST-IN-PLACE STRUCTURAL CONCRETE: fc = 1,400 psi, n = 8
REINF. STEEL: fc = 24,000 psi
STRUCTURAL STEEL: fs = 20,000 psi

QUANTITIES

STRUCTURAL CONCRETE
REINFORCING STEEL
— SEE SCHEDULE OF INSTALLATION

INDEX OF SHEETS

A- SITUATION & LAYOUT
B- SECTION DETAILS
C- SCHEDULE OF INSTALLATION FOR 18"-42" RCP. 12"-48" CMP.
D- SCHEDULE OF INSTALLATION FOR 48"-66" RCP. 60"-78" CMP.

NO.	DATE	APPR.	REMARKS

REVISIONS

UTAH DEPARTMENT OF TRANSPORTATION
STANDARD DRAWINGS FOR ROAD AND BRIDGE CONSTRUCTION
SALT LAKE CITY, UTAH

RECOMMENDED FOR APPROVAL — JULY 03,2002 DATE
CHAIRMAN STANDARDS COMMITTEE APPROVED — JULY 03,2002 DATE
DEPUTY DIRECTOR

STANDARD DRAWING TITLE
STANDARD CATCH BASIN AND CLEANOUT BOX SITUATUON & LAYOUT

STD DWG
CB 9A

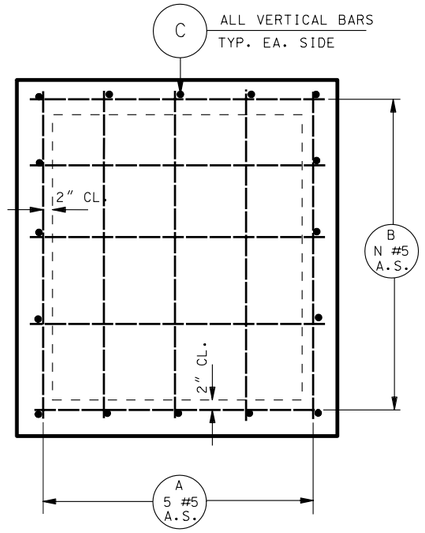

PLAN BOTTOM SLAB

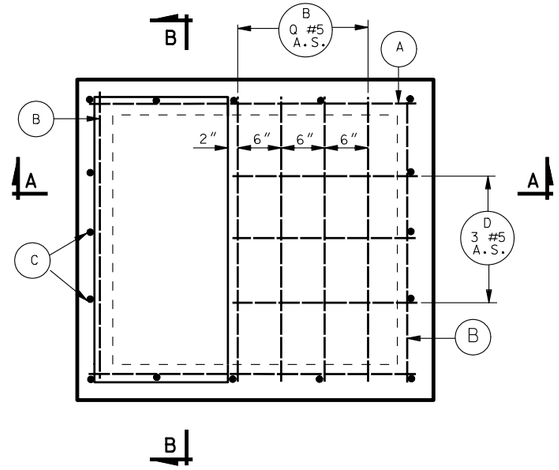

PLAN TOP SLAB

NOTES

1. FORM THE BOTTOM SLAB OF THE BOX TO FIT THE INVERT OF THE PIPE(S) WHEN SO REQUIRED ACCORDING TO THE DETAIL SHOWN ON THIS SHEET. SEE TABLE 3 ON STD DWG 9C AND CB 9D FOR ADDITIONAL CONCRETE QUANTITIES.
2. DEDUCT CONCRETE DISPLACED BY PIPE(S) FROM THOSE CONCRETE QUANTITIES GIVEN IN SCHEDULE OF INSTALLATION TABLE 1 ON STD DWG CB 9C AND CB 9D.
3. WHEN FORMED INVERT IS REQUIRED, SEE TABLE 3 ON STD DWG CB 3 AND CB 4 FOR ADDITIONAL CONCRETE QUANTITIES.
4. FIELD CUT AND BEND REINFORCING STEEL AS NECESSARY TO CLEAR PIPE(S) AND MAINTAIN 2 INCHES MINIMUM CLEARANCE.
5. UNLESS OTHERWISE SHOWN, ALL DIMENSIONS ARE OUT TO OUT OF BARS.
6. WEIGHT QUANTITIES FOR GRATE AND FRAME AND SOLID COVER AND ARE SHOWN FOR INFORMATION ONLY.
7. SEE STD DWG CB 9 FOR DIMENSIONS.
8. PIPE DIAMETERS SHOWN IN TABLES AND SCHEDULE ARE INSIDE DIAMETERS.
9. MAXIMUM PIPE DIMENSIONS SHOWN IN SCHEDULE IN INSTALLATION ARE FOR PIPES PERPENDICULAR TO WALLS OF BOX, DETERMINE CLEARANCES FOR SKEWED PIPES.
10. SEE STD DWG GF 6 FOR MANHOLE STEP DETAILS.
11. ALL REINFORCING BARS TO BE #5 BARS @ 12" UNLESS OTHERWISE SHOWN.
12. WHEN SOLID COVER IS REQUIRED ADD 0.023 CU.YDS. CONCRETE TO THOSE QUANTITIES GIVEN IN SCHEDULE OF INSTALLATION AND 3" TO EACH D-BAR, AND 1.0 LB. TO REINFORCING STEEL QUANTITIES.

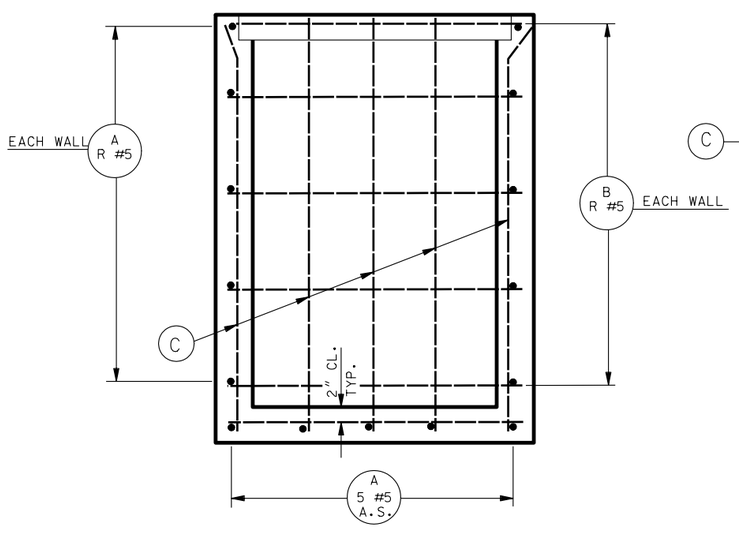

SECTION B-B

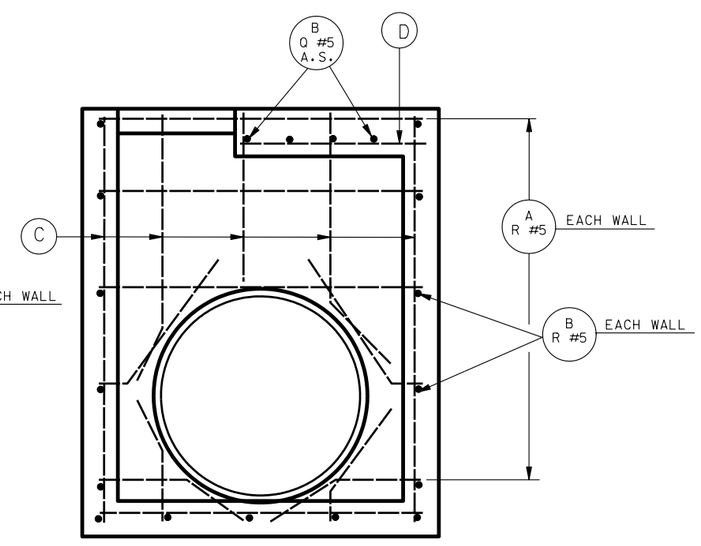

SECTION A-A

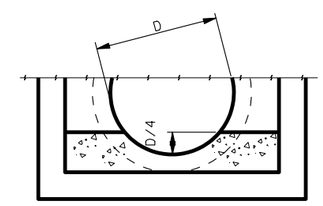

FORMED INVERT

REVISIONS

NO.	DATE	APPR.	REMARKS

UTAH DEPARTMENT OF TRANSPORTATION
STANDARD DRAWINGS FOR ROAD AND BRIDGE CONSTRUCTION
SALT LAKE CITY, UTAH

RECOMMENDED FOR APPROVAL — JULY 03,2002 DATE

CHAIRMAN STANDARDS COMMITTEE APPROVED — JULY 03,2002 DATE

DEPUTY DIRECTOR

STANDARD DRAWING TITLE: STANDARD CATCH BASIN AND CLEANOUT BOX SECTION DETAILS

STD DWG: CB 9B

LINE	NO. of MANHOLE STEPS	R	COLUMN "A" DIMENSIONS H	K	T	REINFORCING STEEL A LENGTH	A NO	B LENGTH	B NO	C NO.=16 LENGTH	D NO.=3 LENGTH	QUANTITIES CONC. yd^3	REINF. STEEL lbs
1	--	4	3'-10	2'-8	6"	3'-8	13	4'-4	16	3'-5	1'-6	1.41	184
2	2	4	4'-4	3'-2			13		16	3'-11		1.55	192
3	2	5	4'-10	3'-8			15		18	4'-5		1.69	217
4	3	5	5'-4	4'-2			15		18	4'-11		1.83	225
5	3	6	5'-10	4'-8			17		20	5'-5		1.98	250
6	4	6	6'-4	5'-2			17		20	5'-11		2.12	259
7	4	7	6'-10	5'-8			19		22	6'-5		2.26	284
8	5	7	7'-4	6'-2			19		22	6'-11		2.40	292
9	5	8	7'-10	6'-8			21		24	7'-5		2.54	317
10	6	8	8'-4	7'-2			21		24	7'-11		2.69	326
11	6	9	8'-10	7'-8			23		26	8'-5		2.83	351
12	7	9	9'-4	8'-2			23		26	8'-11		2.97	359
13	7	10	9'-10	8'-8			25		28	9'-5		3.11	384
14	8	10	10'-4	9'-2			25		28	9'-11		3.25	392
15	8	11	10'-10	9'-8			27		30	10'-5		3.40	417
16	9	11	11'-4	10'-2			27		30	10'-11		3.54	426
17	9	12	11'-10	10'-8			29		32	11'-5		3.68	451
18	10	12	12'-4	11'-2	6"	3'-8	29	4'-4	32	11'-11	1'-6	3.82	459
19	10	13	12'-11	11'-8	7"	3'-10	31	4'-6	34	12'-6	1'-7	4.72	497
20	11	13	13'-5	12'-2			31		34	13'-0		4.89	505
21	11	14	13'-11	12'-8			33		36	13'-6		5.06	531
22	12	14	14'-5	13'-2			33		36	14'-0		5.23	539
23	12	15	14'-11	13'-8			35		38	14'-6		5.40	565
24	13	15	15'-5	14'-2			35		38	15'-0		5.57	574
25	13	16	15'-11	14'-8			37		40	15'-6		5.74	599
26	14	16	16'-5	15'-2			37		40	16'-0		5.91	608
27	14	17	16'-11	15'-8			39		42	16'-6		6.08	633
28	15	17	17'-5	16'-2			39		42	17'-0		6.25	642
29	15	18	17'-11	16'-8			41		44	17'-6		6.42	667
30	16	18	18'-5	17'-2			41		44	18'-0		6.59	676
31	16	19	18'-11	17'-8			43		46	18'-6		6.76	702
32	17	19	19'-5	18'-2			43		46	19'-0		6.92	710
33	17	20	19'-11	18'-8			45		48	19'-6		7.09	736
34	18	20	20'-5	19'-2			45		48	20'-0		7.26	744
35	18	21	20'-11	19'-8			47		50	20'-6		7.43	770
36	19	21	21'-5	20'-2			47		50	21'-0		7.60	778
37	19	22	21'-11	20'-8			49		52	21'-6		7.77	804
38	20	22	22'-5	21'-2	7"	3'-10	49	4'-6	52	22'-0	1'-7	7.94	812
39	20	23	23'-0	21'-8	8"	4'-0	51	4'-8	54	22'-7	1'-8	9.47	858
40	21	23	23'-6	22'-2			51		54	23'-1		9.67	866
41	21	24	24'-0	22'-8			53		56	23'-7		9.87	892
42	22	24	24'-6	23'-2			53		56	24'-1		10.07	901
43	22	25	25'-0	23'-8			55		58	24'-7		10.26	927
44	23	25	25'-6	24'-2			55		58	25'-1		10.46	936
45	23	26	26'-0	24'-8			57		60	25'-7		10.66	962
46	24	26	26'-6	25'-2			57		60	26'-1		10.86	970
47	24	27	27'-0	25'-8			59		62	26'-7		11.05	997
48	25	27	27'-6	26'-2			59		62	27'-1		11.25	1005
49	25	28	28'-0	26'-8			61		64	27'-7		11.45	1031
50	26	28	28'-6	27'-2			61		64	28'-1		11.65	1040
51	26	29	29'-0	27'-8			63		66	28'-7		11.84	1066
52	27	29	29'-6	28'-2			63		66	29'-1		12.04	1075
53	27	30	30'-0	28'-8			65		68	29'-7		12.24	1101
54	28	30	30'-6	29'-2	8"	4'-0	65	4'-8	68	30'-1	1'-8	12.44	1109
			W=3'-0, M=1'-4½									N=5, Q=3	

LINE	COLUMN "B" DIMENSIONS H	K	T	REINFORCING STEEL A LENGTH	A NO	B LENGTH	B NO	C NO.=16 LENGTH	D NO.=3 LENGTH	QUANTITIES CONC. yd^3	REINF. STEEL lbs
1	----	----	---	----	--	----	--	----	---	----	----
2	4'-5	3'-3	6"	4'-2	13	4'-4	17	4'-0	2'-0	1.73	206
3	4'-11	3'-9			15		19	4'-6		1.88	232
4	5'-5	4'-3			15		19	5'-0		2.03	241
5	5'-11	4'-9			17		21	5'-6		2.19	266
6	6'-5	5'-3			17		21	6'-0		2.34	275
7	6'-11	5'-9			19		23	6'-6		2.49	303
8	7'-5	6'-3			19		23	7'-0		2.64	310
9	7'-11	6'-9			21		25	7'-6		2.79	336
10	8'-5	7'-3			21		25	8'-0		2.94	344
11	8'-11	7'-9			23		27	8'-6		3.09	370
12	9'-5	8'-3			23		27	9'-0		3.24	378
13	9'-11	8'-9			25		29	9'-6		3.39	405
14	10'-5	9'-3			25		29	10'-0		3.54	413
15	10'-11	9'-9			27		31	10'-6		3.70	439
16	11'-5	10'-3			27		31	11'-0		3.85	447
17	11'-11	10'-9			29		33	11'-6		4.00	473
18	12'-6	11'-3	6"	4'-2	29	4'-4	33	12'-0	2'-0	4.15	481
19	13'-0	11'-9	7"	4'-4	31	4'-6	35	12'-7	2'-1	5.12	521
20	13'-6	12'-3			31		35	13'-1		5.30	529
21	14'-0	12'-9			33		37	13'-7		5.48	556
22	14'-6	13'-3			33		37	14'-1		5.66	564
23	15'-0	13'-9			35		39	14'-7		5.84	591
24	15'-6	14'-3			35		39	15'-1		6.02	599
25	16'-0	14'-9			37		41	15'-7		6.20	626
26	16'-6	15'-3			37		41	16'-1		6.38	634
27	17'-0	15'-9			39		43	16'-7		6.56	661
28	17'-6	16'-3			39		43	17'-1		6.74	669
29	18'-0	16'-9			41		45	17'-7		6.92	696
30	18'-6	17'-3			41		45	18'-1		7.10	704
31	19'-0	17'-9			43		47	18'-7		7.28	731
32	19'-6	18'-3			43		47	19'-1		7.46	740
33	20'-0	18'-9			45		49	19'-7		7.64	766
34	20'-6	19'-3			45		49	20'-1		7.82	775
35	21'-0	19'-9			47		51	20'-7		8.10	801
36	21'-6	20'-3			47		51	21'-1		8.18	810
37	22'-0	20'-9			49		53	21'-7		8.36	837
38	22'-6	21'-3	7"	4'-4	49	4'-6	53	22'-1	2'-1	8.54	345
39	23'-1	21'-9	8"	4'-6	51	4'-8	55	22'-8	2'-2	10.17	892
40	23'-7	22'-3			51		55	23'-2		10.38	900
41	24'-1	22'-9			53		57	23'-8		10.59	928
42	24'-7	23'-3			53		57	24'-2		10.80	936
43	25'-1	23'-9			55		59	24'-8		11.01	963
44	25'-7	24'-3			55		59	25'-2		11.22	972
45	26'-1	24'-9			57		61	25'-8		11.43	1000
46	26'-7	25'-3			57		61	26'-2		11.64	1008
47	27'-1	25'-9			59		63	26'-8		11.85	1035
48	27'-7	26'-3			59		63	27'-2		12.06	1043
49	28'-1	26'-9			61		65	27'-8		12.27	1071
50	28'-7	27'-3			61		65	28'-2		12.48	1079
51	29'-1	27'-9			63		67	28'-8		12.69	1107
52	29'-7	28'-3			63		67	29'-2		12.90	1115
53	30'-1	28'-9			65		69	29'-8		13.11	1142
54	30'-7	29'-3	8"	4'-6	65	4'-8	69	30'-2	2'-2	13.32	1151
	W=3'-6, M=1'-10½									N=5, Q=4	

LINE	COLUMN "C" DIMENSIONS H	K	T	REINFORCING STEEL A LENGTH	A NO	B LENGTH	B NO	C NO.=18 LENGTH	D NO.=3 LENGTH	QUANTITIES CONC. yd^3	REINF. STEEL lbs
1	----	----	---	----	--	----	--	----	---	----	----
2	----	----	---	----	--	----	--	----	---	----	----
3	5'-0	3'-10	6"	4'-8	15	4'-4	21	4'-7	2'-6	2.08	262
4	5'-6	4'-4			15		21	5'-1		2.24	271
5	6'-0	4'-10			17		23	5'-7		2.40	299
6	6'-6	5'-4			17		23	6'-1		2.57	309
7	7'-0	5'-10			19		25	6'-7		2.73	337
8	7'-6	6'-4			19		25	7'-1		2.89	346
9	8'-0	6'-10			21		27	7'-7		3.05	374
10	8'-6	7'-4			21		27	8'-1		3.21	383
11	9'-0	7'-10			23		29	8'-7		3.37	412
12	9'-6	8'-4			23		29	9'-1		3.53	421
13	10'-0	8'-10			25		31	9'-7		3.69	449
14	10'-6	9'-4			25		31	10'-1		3.85	459
15	11'-0	9'-10			27		33	10'-7		4.01	487
16	11'-6	10'-4			27		33	11'-1		4.18	496
17	12'-0	10'-10			29		35	11'-7		4.34	524
18	12'-6	11'-4	6"	4'-8	29	4'-4	35	12'-1	2'-6	4.50	534
19	13'-1	11'-10	7"	4'-10	31	4'-6	37	12'-8	2'-7	5.52	576
20	13'-7	12'-4			31		37	13'-2		5.71	585
21	14'-1	12'-10			33		39	13'-8		5.90	613
22	14'-7	13'-4			33		39	14'-2		6.09	622
23	15'-1	13'-10			35		41	14'-8		6.28	651
24	15'-7	14'-4			35		41	15'-2		6.47	662
25	16'-1	14'-10			37		43	15'-8		6.66	691
26	16'-7	15'-4			37		43	16'-2		6.85	700
27	17'-1	15'-10			39		45	16'-8		7.04	729
28	17'-7	16'-4			39		45	17'-2		7.24	738
29	18'-1	16'-10			41		47	17'-8		7.43	767
30	18'-7	17'-4			41		47	18'-2		7.62	776
31	19'-1	17'-10			43		49	18'-8		7.81	805
32	19'-7	18'-4			43		49	19'-2		8.00	815
33	20'-1	18'-10			45		51	19'-8		8.19	844
34	20'-7	19'-4			45		51	20'-2		8.38	853
35	21'-1	19'-10			47		53	20'-8		8.57	882
36	21'-7	20'-4			47		53	21'-2		8.76	891
37	22'-1	20'-10			49		55	21'-8		8.95	920
38	22'-7	21'-4	7"	4'-10	49	4'-6	55	22'-2	2'-7	9.15	929
39	23'-2	21'-10	8"	5'-0	51	4'-8	57	22'-9	2'-8	10.86	979
40	23'-8	22'-4			51		57	23'-3		11.09	988
41	24'-2	22'-10			53		59	23'-9		11.31	1018
42	24'-8	23'-4			53		59	24'-3		11.53	1027
43	25'-2	23'-10			55		61	24'-9		11.75	1057
44	25'-8	24'-4			55		61	25'-3		11.97	1066
45	26'-2	24'-10			57		63	25'-9		12.20	1096
46	26'-8	25'-4			57		63	26'-3		12.42	1105
47	27'-2	25'-10			59		65	26'-9		12.64	1135
48	27'-8	26'-4			59		65	27'-3		12.86	1144
49	28'-2	26'-10			61		67	27'-9		13.08	1174
50	28'-8	27'-4			61		67	28'-3		13.31	1183
51	29'-2	27'-10			63		69	28'-9		13.53	1212
52	29'-8	28'-4			63		69	29'-3		13.75	1222
53	30'-2	28'-10			65		71	29'-9		13.97	1251
54	30'-8	29'-4	8"	5'-0	65	4'-8	71	30'-3	2'-8	14.19	1261
	W=4'-0, M=2'-4½									N=6, Q=5	

LINE	COLUMN "D" DIMENSIONS H	K	T	REINFORCING STEEL A LENGTH	A NO	B LENGTH	B NO	C NO.=18 LENGTH	D NO.=3 LENGTH	QUANTITIES CONC. yd^3	REINF. STEEL lbs	LINE
1	----	----	---	----	--	----	--	----	---	----	----	1
2	----	----	---	----	--	----	--	----	---	----	----	2
3	----	----	---	----	--	----	--	----	---	----	----	3
4	5'-7	4'-5	6"	5'-2	15	4'-4	22	5'-2	3'-0	2.45	287	4
5	6'-1	4'-11			17		24	5'-8		2.62	316	5
6	6'-7	5'-5			17		24	6'-2		2.79	325	6
7	7'-1	5'-11			19		26	6'-8		2.96	354	7
8	7'-7	6'-5			19		26	7'-2		3.13	364	8
9	8'-1	6'-11			21		28	7'-8		3.30	393	9
10	8'-7	7'-5			21		28	8'-2		3.47	402	10
11	9'-1	7'-11			23		30	8'-8		3.64	432	11
12	9'-7	8'-5			23		30	9'-2		3.81	441	12
13	10'-1	8'-11			25		32	9'-8		3.98	470	13
14	10'-7	9'-5			25		32	10'-2		4.15	480	14
15	11'-1	9'-11			27		34	10'-8		4.32	509	15
16	11'-7	10'-5			27		34	11'-2		4.49	518	16
17	12'-1	10'-11			29		36	11'-8		4.66	547	17
18	12'-7	11'-5	6"	5'-2	29	4'-4	36	12'-2	3'-0	4.83	557	18
19	13'-2	11'-11	7"	5'-4	31	4'-6	38	12'-9	3'-1	5.92	600	19
20	13'-8	12'-5			31		38	13'-3		6.12	609	20
21	14'-2	12'-11			33		40	13'-9		6.32	639	21
22	14'-8	13'-5			33		40	14'-3		6.52	648	22
23	15'-2	13'-11			35		42	14'-9		6.72	678	23
24	15'-8	14'-5			35		42	15'-3		6.93	688	24
25	16'-2	14'-11			37		44	15'-9		7.13	718	25
26	16'-8	15'-5			37		44	16'-3		7.33	727	26
27	17'-2	15'-11			39		46	16'-9		7.53	757	27
28	17'-8	16'-5			39		46	17'-3		7.74	766	28
29	18'-2	16'-11			41		48	17'-9		7.94	796	29
30	18'-8	17'-5			41		48	18'-3		8.14	806	30
31	19'-2	17'-11			43		50	18'-9		8.34	836	31
32	19'-8	18'-5			43		50	19'-3		8.53	845	32
33	20'-2	18'-11			45		52	19'-9		8.75	875	33
34	20'-8	19'-5			45		52	20'-3		8.95	884	34
35	21'-2	19'-11			47		54	20'-9		9.15	914	35
36	21'-8	20'-5			47		54	21'-3		9.35	923	36
37	22'-2	20'-11			49		56	21'-9		9.55	953	37
38	22'-8	21'-5	7"	5'-4	49	4'-6	56	22'-3	3'-1	9.76	962	38
39	23'-3	21'-11	8"	5'-6	51	4'-8	58	22'-10	3'-2	11.57	1013	39
40	23'-9	22'-5			51		58	23'-4		11.80	1023	40
41	24'-3	22'-11			53		60	23'-10		12.04	1053	41
42	24'-9	23'-5			53		60	24'-4		12.27	1063	42
43	25'-3	23'-11			55		62	24'-10		12.51	1093	43
44	25'-9	24'-5			55		62	25'-4		12.74	1103	44
45	26'-3	24'-11			57		64	25'-10		12.98	1133	45
46	26'-9	25'-5			57		64	26'-4		13.21	1143	46
47	27'-3	25'-11			59		66	26'-10		13.45	1173	47
48	27'-9	26'-5			59		66	27'-4		13.68	1183	48
49	28'-3	26'-11			61		68	27'-10		13.92	1213	49
50	28'-9	27'-5			61		68	28'-4		14.15	1223	50
51	29'-3	27'-11			63		70	28'-10		14.39	1253	51
52	29'-9	28'-5			63		70	29'-4		14.62	1263	52
53	30'-3	28'-11			65		72	29'-10		14.86	1293	53
54	30'-9	29'-5	8"	5'-6	65	4'-8	72	30'-4	3'-2	15.09	1303	54
	W=4'-6, M=2'-10½									N=6, Q=6		

TABLE 1 : CONCRETE DISPLACED BY PIPES

PIPE SIZES RCP	CMP	T= 6" yd^3	T= 7" yd^3	T= 8" yd^3
	12"	0.015	0.017	0.019
	18"	0.033	0.038	0.044
18"	24"	0.058	0.068	0.078
24"	30"	0.091	0.106	0.121
30"	36"	0.131	0.153	0.174
36"	42"	0.178	0.208	0.237
42"	48"	0.233	0.271	0.310

TABLE 2 : MAXIMUM PIPE SIZE TO BE USED

	RCP	CMP
COL. A	18"	12", 18", 24"
COL. B	30"	30", 36"
COL. C	36"	42"
COL. D	42"	48"

TABLE 3 : CONCRETE NEEDED FOR FORMED INVERT. (SEE SHEET 2)

PIPE SIZES	12"	18"	24"	30"	36"	42"	48"
RCP (yd^3)	-----	0.191	0.222	0.286	0.378	0.483	-----
CMP (yd^3)	0.081	0.106	0.120	0.124	0.169	0.220	0.277

STRUCTURAL STEEL :

RECTANGULAR GRATE & FRAME = 340 lbs
BICYCLE-SAFE GRATE & FRAME = 365 lbs
SOLID COVER & FRAME = 474 lbs

REVISIONS

NO.	DATE	APPR.	REMARKS

UTAH DEPARTMENT OF TRANSPORTATION
STANDARD DRAWINGS FOR ROAD AND BRIDGE CONSTRUCTION
SALT LAKE CITY, UTAH

RECOMMENDED FOR APPROVAL — JULY 03,2002 DATE
CHAIRMAN STANDARDS COMMITTEE APPROVED — JULY 03,2002 DATE
DEPUTY DIRECTOR

STANDARD CATCH BASIN AND CLEANOUT BOX SCHEDULE OF INSTALLATION 18" TO 42" RCP 12" TO 48" CMP
STANDARD DRAWING TITLE

STD DWG
CB 9C

LINE	NO. of MANHOLE STEPS	R	COLUMN "E" DIMENSIONS H	K	T	REINFORCING STEEL A LENGTH	NO	B LENGTH	NO	C NO.=20 LENGTH	D NO.=3 LENGTH	QUANTITIES CONC. yd^3	REINF. STEEL lbs
1	4	6	* 6'-4	5'-2	6"	5'-11	17	4'-4	26	5'-11	3'-9	3.00	358
2	4	7	6'-10	5'-8		19			28	6'-5		3.18	389
3	5	7	7'-4	6'-2		19			28	6'-11		3.37	400
4	5	8	7'-10	6'-8		21			30	7'-5		3.55	432
5	6	8	8'-4	7'-2		21			30	7'-11		3.74	442
6	6	9	8'-10	7'-8		23			32	8'-5		3.92	474
7	7	9	9'-4	8'-2		23			32	8'-11		4.10	484
8	7	10	9'-10	8'-8		25			34	9'-5		4.29	516
9	8	10	10'-4	9'-2		25			34	9'-11		4.47	527
10	8	11	10'-10	9'-8		27			36	10'-5		4.65	558
11	9	11	11'-4	10'-2		27			36	10'-11		4.84	569
12	9	12	11'-10	10'-8		29			38	11'-5		5.02	601
13	10	12	12'-4	11'-2	6"	5'-11	29	4'-4	38	11'-11	3'-9	5.20	611
14	10	13	12'-11	11'-8	7"	6'-1	31	4'-6	40	12'-6	3'-10	6.36	657
15	11	13	13'-5	12'-2			31		40	13'-0		6.58	668
16	11	14	13'-11	12'-8			33		42	13'-6		6.80	700
17	12	14	14'-5	13'-2			33		42	14'-0		7.02	711
18	12	15	14'-11	13'-8			35		44	14'-6		7.23	743
19	13	15	15'-5	14'-2			35		44	15'-0		7.45	753
20	13	16	15'-11	14'-8			37		46	15'-6		7.67	786
21	14	16	16'-5	15'-2			37		46	16'-0		7.89	796
22	14	17	16'-11	15'-8			39		48	16'-6		8.11	829
23	15	17	17'-5	16'-2			39		48	17'-0		8.32	839
24	15	18	17'-11	16'-8			41		50	17'-6		8.54	872
25	16	18	18'-5	17'-2			41		50	18'-0		8.76	882
26	16	19	18'-11	17'-8			43		52	18'-6		8.98	915
27	17	19	19'-5	18'-2			43		52	19'-0		9.19	925
28	17	20	19'-11	18'-8			45		54	19'-6		9.41	958
29	18	20	20'-5	19'-2			45		54	20'-0		9.63	968
30	18	21	20'-11	19'-8			47		56	20'-6		9.85	1001
31	19	21	21'-5	20'-2			47		56	21'-0		10.07	1011
32	19	22	21'-11	20'-8			49		58	21'-6		10.28	1044
33	20	22	22'-5	21'-2	7"	6'-1	49	4'-6	58	22'-0	3'-10	10.50	1054
34	20	23	23'-0	21'-8	8"	6'-3	51	4'-8	60	22'-7	3'-11	12.44	1108
35	21	23	23'-6	22'-2			51		60	23'-1		12.69	1118
36	21	24	24'-0	22'-8			53		62	23'-7		12.94	1151
37	22	24	24'-6	23'-2			53		62	24'-1		13.19	1162
38	22	25	25'-0	23'-8			55		64	24'-7		13.45	1195
39	23	25	25'-6	24'-2			55		64	25'-1		13.70	1206
40	23	26	26'-0	24'-8			57		66	25'-7		13.95	1239
41	24	26	26'-6	25'-2			57		66	26'-1		14.21	1249
42	24	27	27'-0	25'-8			59		68	26'-7		14.46	1282
43	25	27	27'-6	26'-2			59		68	27'-1		14.71	1293
44	25	28	28'-0	26'-8			61		70	27'-7		14.97	1326
45	26	28	28'-6	27'-2			61		70	28'-1		15.22	1336
46	26	29	29'-0	27'-8			63		72	28'-7		15.47	1370
47	27	29	29'-6	28'-2			63		72	29'-1		15.73	1380
48	27	30	30'-0	28'-8			65		74	29'-7		15.98	1413
49	28	30	30'-6	29'-2	8"	6'-3	65	4'-8	74	30'-1	3'-11	16.23	1424
			W=5'-3, M=3'-7½									N=7, Q=7	

LINE	COLUMN "F" DIMENSIONS H	K	T	REINFORCING STEEL A LENGTH	NO	B LENGTH	NO	C NO.=20 LENGTH	D NO.=3 LENGTH	QUANTITIES CONC. yd^3	REINF. STEEL lbs
1	* 6'-10	5'-8	6"	6'-5	19	4'-4	29	6'-5	4'-3	3.39	405
2	7'-4	6'-2		6'-11	19		29	6'-11		3.59	416
3	7'-10	6'-8			21		31	7'-5		3.78	449
4	8'-4	7'-2			21		31	7'-11		3.97	459
5	8'-10	7'-8			23		33	8'-5		4.16	492
6	9'-4	8'-2			23		33	8'-11		4.36	502
7	9'-10	8'-8			25		35	9'-5		4.55	535
8	10'-4	9'-2			25		35	9'-11		4.74	546
9	10'-10	9'-8			27		37	10'-5		4.93	579
10	11'-4	10'-2			27		37	10'-11		5.13	589
11	11'-10	10'-8			29		39	11'-5		5.32	622
12	12'-4	11'-2	6"	6'-5	29	4'-4	39	11'-11	4'-3	5.51	632
13	12'-11	11'-8	7"	6'-7	31	4'-6	41	12'-6	4'-4	6.73	680
14	13'-5	12'-2			31		41	13'-0		6.96	690
15	13'-11	12'-8			33		43	13'-6		7.18	724
16	14'-5	13'-2			33		43	14'-0		7.41	734
17	14'-11	13'-8			35		45	14'-6		7.64	768
18	15'-5	14'-2			35		45	15'-0		7.87	778
19	15'-11	14'-8			37		47	15'-6		8.10	812
20	16'-5	15'-2			37		47	16'-0		8.33	822
21	16'-11	15'-8			39		49	16'-6		8.56	856
22	17'-5	16'-2			39		49	17'-0		8.78	866
23	17'-11	16'-8			41		51	17'-6		9.01	900
24	18'-5	17'-2			41		51	18'-0		9.24	910
25	18'-11	17'-8			43		53	18'-6		9.47	943
26	19'-5	18'-2			43		53	19'-0		9.69	954
27	19'-11	18'-8			45		55	19'-6		9.93	987
28	20'-5	19'-2			45		55	20'-0		10.16	998
29	20'-11	19'-8			47		57	20'-6		10.39	1031
30	21'-5	20'-2			47		57	21'-0		10.61	1042
31	21'-11	20'-8			49		59	21'-6		10.84	1075
32	22'-5	21'-2	7"	6'-7	49	4'-6	59	22'-0	4'-4	11.07	1086
33	23'-0	21'-8	8"	6'-9	51	4'-8	61	22'-7	4'-5	13.09	1141
34	23'-6	22'-2			51		61	23'-1		13.36	1151
35	24'-0	22'-8			53		63	23'-7		13.63	1186
36	24'-6	23'-2			53		63	24'-1		13.89	1196
37	25'-0	23'-8			55		65	24'-7		14.16	1230
38	25'-6	24'-2			55		65	25'-1		14.42	1241
39	26'-0	24'-8			57		67	25'-7		14.69	1275
40	26'-6	25'-2			57		67	26'-1		14.95	1285
41	27'-0	25'-8			59		69	26'-7		15.22	1320
42	27'-6	26'-2			59		69	27'-1		15.48	1330
43	28'-0	26'-8			61		71	27'-7		15.75	1364
44	28'-6	27'-2			61		71	28'-1		16.01	1375
45	29'-0	27'-8			63		73	28'-7		16.28	1409
46	29'-6	28'-2			63		73	29'-1		16.55	1419
47	30'-0	28'-8			65		75	29'-7		16.81	1454
48	30'-6	29'-2	8"	6'-9	65	4'-8	75	30'-1	4'-5	17.08	1478
	W=5'-9, M=4'-1½									N=7, Q=8	

LINE	COLUMN "G" DIMENSIONS H	K	T	REINFORCING STEEL A LENGTH	NO	B LENGTH	NO	C NO.=22 LENGTH	D NO.=3 LENGTH	QUANTITIES CONC. yd^3	REINF. STEEL lbs
1	----	----	---	----	--	----	--	----	---	----	----
2	----	----	---	----	--	----	--	----	---	----	----
3	* 7'-4	6'-2	6"	6'-11	19	4'-4	31	6'-11	4'-9	3.80	451
4	7'-10	6'-8			21		33	7'-5		4.00	486
5	8'-4	7'-2			21		33	7'-11		4.20	497
6	8'-10	7'-8			23		35	8'-5		4.40	532
7	9'-4	8'-2			23		35	8'-11		4.61	544
8	9'-10	8'-8			25		37	9'-5		4.81	579
9	10'-4	9'-2			25		37	9'-11		5.01	590
10	10'-10	9'-8			27		39	10'-5		5.21	625
11	11'-4	10'-2			27		39	10'-11		5.42	636
12	11'-11	10'-8			29		41	11'-5		5.62	671
13	12'-5	11'-2	6"	6'-11	29	4'-4	41	11'-11	4'-9	5.82	683
14	12'-11	11'-8	7"	7'-1	31	4'-6	43	12'-6	4'-10	7.09	733
15	13'-5	12'-2			31		43	13'-0		7.33	744
16	13'-11	12'-8			33		45	13'-6		7.57	780
17	14'-5	13'-2			33		45	14'-0		7.81	792
18	14'-11	13'-8			35		47	14'-6		8.05	827
19	15'-5	14'-2			35		47	15'-0		8.29	838
20	15'-11	14'-8			37		49	15'-6		8.53	874
21	16'-5	15'-2			37		49	16'-0		8.77	886
22	16'-11	15'-8			39		51	16'-6		9.01	921
23	17'-5	16'-2			39		51	17'-0		9.24	933
24	17'-11	16'-8			41		53	17'-6		9.48	968
25	18'-5	17'-2			41		53	18'-0		9.72	980
26	18'-11	17'-8			43		55	18'-6		9.96	1015
27	19'-5	18'-2			43		55	19'-0		10.20	1027
28	19'-11	18'-8			45		57	19'-6		10.44	1063
29	20'-5	19'-2			45		57	20'-0		10.68	1074
30	20'-11	19'-8			47		59	20'-6		10.92	1110
31	21'-5	20'-2			47		59	21'-0		11.16	1121
32	21'-11	20'-8			49		61	21'-6		11.40	1157
33	22'-5	21'-2	7"	7'-1	49	4'-6	61	22'-0	4'-10	11.64	1168
34	23'-0	21'-8	8"	7'-3	51	4'-8	63	22'-7	4'-11	13.75	1226
35	23'-6	22'-2			51		63	23'-1		14.03	1237
36	24'-0	22'-8			53		65	23'-7		14.31	1274
37	24'-6	23'-2			53		65	24'-1		14.58	1285
38	25'-0	23'-8			55		67	24'-7		14.86	1321
39	25'-6	24'-2			55		67	25'-1		15.14	1333
40	26'-0	24'-8			57		69	25'-7		15.42	1369
41	26'-6	25'-2			57		69	26'-1		15.70	1381
42	27'-0	25'-8			59		71	26'-7		15.97	1417
43	27'-6	26'-2			59		71	27'-1		16.25	1429
44	28'-0	26'-8			61		73	27'-7		16.53	1465
45	28'-6	27'-2			61		73	28'-1		16.81	1476
46	29'-0	27'-8			63		75	28'-7		17.08	1513
47	29'-6	28'-2			63		75	29'-1		17.36	1524
48	30'-0	28'-8			65		77	29'-7		17.64	1561
49	30'-6	29'-2	8"	7'-3	65	4'-8	77	30'-1	4'-11	17.92	1572
	W=6'-3, M=4'-7½									N=8, Q=9	

LINE	COLUMN "H" DIMENSIONS H	K	T	REINFORCING STEEL A LENGTH	NO	B LENGTH	NO	C NO.=22 LENGTH	D NO.=3 LENGTH	QUANTITIES CONC. yd^3	REINF. STEEL lbs	LINE
1	----	----	---	----	--	----	--	----	---	----	----	1
2	----	----	---	----	--	----	--	----	---	----	----	2
3	----	----	---	----	--	----	--	----	---	----	----	3
4	* 8'-1	6'-11	6"	7'-5	21	4'-4	34	7'-8	5'-3	4.33	508	4
5	8'-7	7'-5			21		34	8'-2		4.54	520	5
6	9'-1	7'-11			23		36	8'-8		4.75	556	6
7	9'-7	8'-5			23		36	9'-2		4.96	567	7
8	10'-1	8'-11			25		38	9'-8		5.18	603	8
9	10'-7	9'-5			25		38	10'-2		5.39	615	9
10	11'-1	9'-11			27		40	10'-8		5.60	651	10
11	11'-7	10'-5			27		40	11'-2		5.81	662	11
12	12'-1	10'-11			29		42	11'-8		6.02	698	12
13	12'-7	11'-5	6"	7'-5	29	4'-4	42	12'-2	5'-3	6.23	710	13
14	13'-2	11'-11	7"	7'-7	31	4'-6	44	12'-9	5'-4	7.58	761	14
15	13'-8	12'-5			31		44	13'-3		7.83	772	15
16	14'-2	12'-11			33		46	13'-9		8.08	809	16
17	14'-8	13'-5			33		46	14'-3		8.33	821	17
18	15'-2	13'-11			35		48	14'-9		8.58	857	18
19	15'-8	14'-5			35		48	15'-3		8.83	869	19
20	16'-2	14'-11			37		50	15'-9		9.08	905	20
21	16'-8	15'-5			37		50	16'-3		9.33	917	21
22	17'-2	15'-11			39		52	16'-9		9.58	954	22
23	17'-8	16'-5			39		52	17'-3		9.83	965	23
24	18'-2	16'-11			41		54	17'-9		10.08	1002	24
25	18'-8	17'-5			41		54	18'-3		10.33	1013	25
26	19'-2	17'-11			43		56	18'-9		10.58	1050	26
27	19'-8	18'-5			43		56	19'-3		10.83	1061	27
28	20'-2	18'-11			45		58	19'-9		11.08	1098	28
29	20'-8	19'-5			45		58	20'-3		11.33	1109	29
30	21'-2	19'-11			47		60	20'-9		11.58	1146	30
31	21'-8	20'-5			47		60	21'-3		11.83	1158	31
32	22'-2	20'-11			49		62	21'-9		12.08	1194	32
33	22'-8	21'-5	7"	7'-7	49	4'-6	62	22'-3	5'-4	12.33	1206	33
34	23'-3	21'-11	8"	7'-9	51	4'-8	64	22'-10	5'-5	14.56	1264	34
35	23'-9	22'-5			51		64	23'-4		14.85	1276	35
36	24'-3	22'-11			53		66	23'-10		15.14	1313	36
37	24'-9	23'-5			53		66	24'-4		15.43	1325	37
38	25'-3	23'-11			55		68	24'-10		15.72	1362	38
39	25'-9	24'-5			55		68	25'-4		16.01	1374	39
40	26'-3	24'-11			57		70	25'-10		16.30	1411	40
41	26'-9	25'-5			57		70	26'-4		16.59	1423	41
42	27'-3	25'-11			59		72	26'-10		16.88	1460	42
43	27'-9	26'-5			59		72	27'-4		17.17	1471	43
44	28'-3	26'-11			61		74	27'-10		17.46	1509	44
45	28'-9	27'-5			61		74	28'-4		17.75	1520	45
46	29'-3	27'-11			63		76	28'-10		18.04	1558	46
47	29'-9	28'-5			63		76	29'-4		18.33	1569	47
48	30'-3	28'-11			65		78	29'-10		18.62	1607	48
49	30'-9	29'-5	8"	7'-9	65	4'-8	78	30'-4	5'-5	18.91	1618	49
	W=6'-9, M=5'-1½									N=8, Q=10		

NOTE: LINES MARKED WITH * REFER TO METAL PIPE ONLY.

TABLE 1 : CONCRETE DISPLACED BY PIPES

PIPE SIZES RCP	CMP	T= 6" yd^3	T= 7" yd^3	T= 8" yd^3
48"	60"	0.340	0.396	0.453
54"	66"	0.427	0.498	0.569
60"	72"	0.524	0.611	0.698
66"	78"	0.630	0.735	0.840

TABLE 2 : MAXIMUM PIPE SIZE TO BE USED

	RCP	CMP
COL. E	48"	60"
COL. F	54"	66"
COL. G	60"	72"
COL. H	66"	78"

TABLE 3 : CONCRETE NEEDED FOR FORMED INVERT. (SEE SHEET 2)

PIPE SIZES	48"	54"	60"	66"	72"	78"
RCP (yd^3)	0.676	0.814	0.964	1.126	----	----
CMP (yd^3)	----	----	0.370	0.443	0.522	0.609

STRUCTURAL STEEL :

RECTANGULAR GRATE & FRAME = 340 lbs
BICYCLE-SAFE GRATE & FRAME = 365 lbs
SOLID COVER & FRAME = 474 lbs

REVISIONS

NO.	DATE	APPR.	REMARKS

UTAH DEPARTMENT OF TRANSPORTATION
STANDARD DRAWINGS FOR ROAD AND BRIDGE CONSTRUCTION
SALT LAKE CITY, UTAH

RECOMMENDED FOR APPROVAL — JULY 03,2002 DATE
CHAIRMAN STANDARDS COMMITTEE APPROVED — JULY 03,2002 DATE
DEPUTY DIRECTOR

STANDARD CATCH BASIN AND CLEANOUT BOX SCHEDULE OF INSTALLATION 48" TO 66"RCP 60" TO 78"CMP

STANDARD DRAWING TITLE

STD DWG
CB 9D

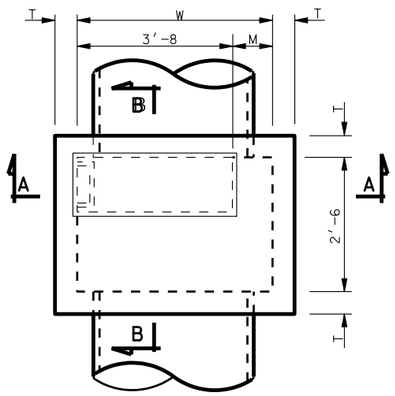

PLAN

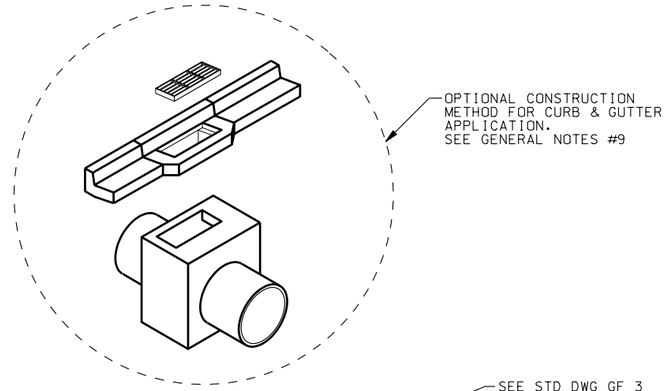

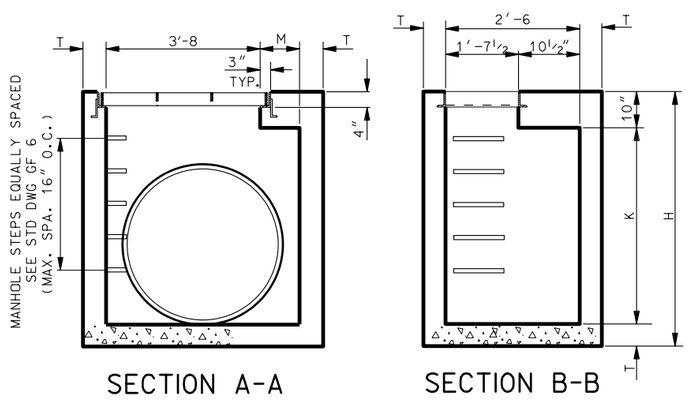

SECTION A-A

SECTION B-B

CATCH BASIN
GRATE AND FRAME APPLICATION

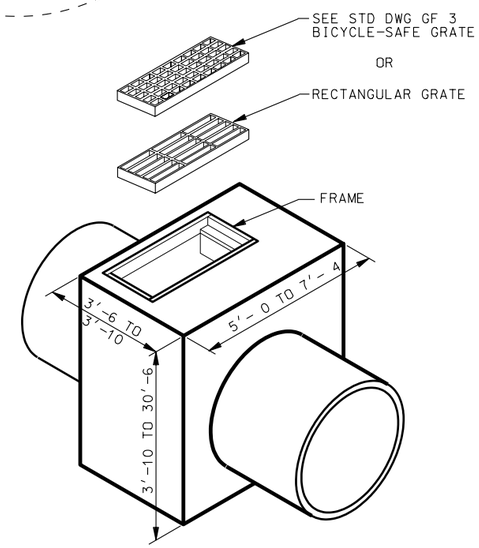

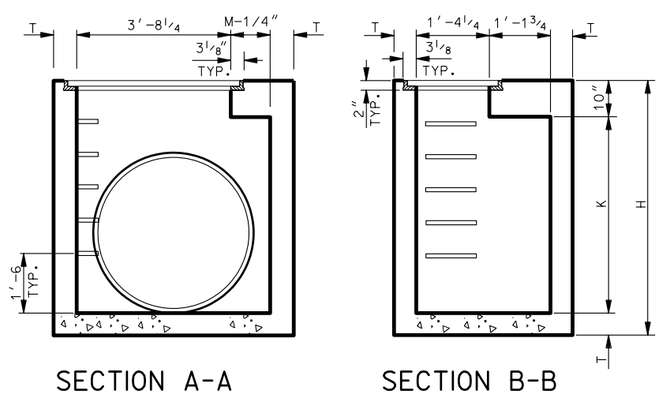

SECTION A-A

SECTION B-B

CLEANOUT BOX
SOLID COVER APPLICATION

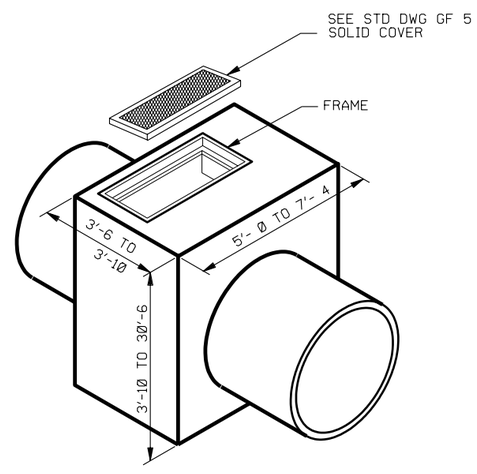

GENERAL NOTES FOR CB 10A TO CB 10C

1. USE COATED DEFORMED BILLET REINFORCING STEEL BARS CONFORMING TO AASHTO M 284 OR M 111 AND M 31 GRADE 60 RESPECTIVELY.
2. USE TYPE II CEMENT (LOW ALKALI) UNLESS SPECIFIED OTHERWISE.
3. CHAMFER ALL EXPOSED CORNER ¾" EXCEPT WHERE NOTED OTHERWISE.
4. USE CONCRETE CLASS AA(AE) FOR ALL CAST-IN-PLACE CONCRETE EXCEPT WHERE SPECIFIED OTHERWISE.
5. PROVIDE 2" CONCRETE COVER TO REINFORCING STEEL EXCEPT WHERE NOTED OTHERWISE.
6. USE STRUCTURAL STEEL CONFORMING TO AASHTO M 270 GRADE 36 EXCEPT WHERE NOTED OTHERWISE.
7. SEE STD DWG GF 3 AND GF 5 FOR GRATING, FRAME AND SOLID COVER DETAILS.
8. SEE ROADWAY PLANS FOR DETAILS OF INSTALLATION, INCLUDING LOCATION OF UNITS NUMBER OF UNITS REQUIRED, TYPE OF UNITS, SIZE AND LOCATION OF PIPE(S).
9. FOR CURB & GUTTER APPLICATIONS ADJAST FINISH GRADE ELEVATION OF BOX AS REQUIRED. INCLUDE CONCRETE QUANTITIES FOR CURB & GUTTER IN ROADWAY QUANTITIES.
10. USE CLASS AA(AE) CAST-IN-PLACE CONCRETE EXCEPT WHERE SPECIFIED OTHERWISE.

DESIGN DATA

HS-20-44 OR INTERSTATE ALTERNATE MILITARY LOADING IN ACCORDANCE WITH CURRENT AASHTO AND INTERIM SPECIFICATIONS.

CAST-IN-PLACE STRUCTURAL CONCRETE: Fc = 1,400 psi n = 8
REINF. STEEL: Fs = 24,000 psi
STRUCTURAL STEEL: Fs = 20,000 psi

QUANTITIES

STRUCTURAL CONCRETE
REINFORCING STEEL } SEE SCHEDULE OF INSTALLATION

INDEX OF SHEETS

(CB 10A) 1- SITUATION & LAYOUT
(CB 10B) 2- SECTION DETAILS
(CB 10C) 3- SCHEDULE OF INSTALLATION FOR 42"-60" RCP. 48"-72" CMP.

REVISIONS			
NO.	DATE	APPR.	REMARKS

UTAH DEPARTMENT OF TRANSPORTATION
STANDARD DRAWINGS FOR ROAD AND BRIDGE CONSTRUCTION
SALT LAKE CITY, UTAH

RECOMMENDED FOR APPROVAL — JULY 03,2002 DATE
CHAIRMAN STANDARDS COMMITTEE APPROVED — JULY 03,2002 DATE
DEPUTY DIRECTOR

STANDARD DRAWING TITLE
STANDARD CATCH BASIN AND CLEANOUT BOX SITUATION & LAYOUT

STD DWG
CB 10A

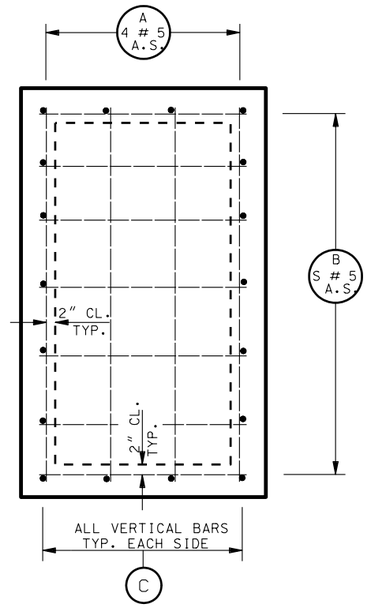

PLAN BOTTOM SLAB

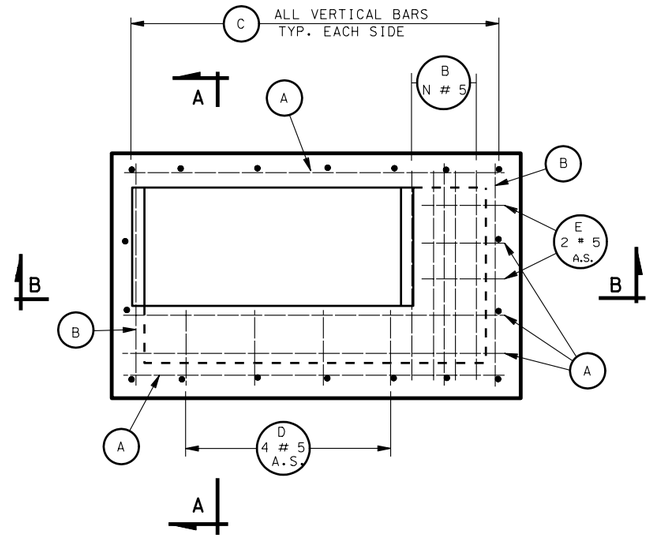

PLAN TOP SLAB

NOTES:

1. QUANTITIES SHOWN IN THE SCHEDULE OF INSTALLATION ARE FOR ONE UNIT ONLY.
2. FORM THE BOTTOM SLAB OF THE BOX TO FIT THE INVERT OF THE PIPE(S) WHEN SO REQUIRED ACCORDING TO THE DETAIL SHOWN ON THIS SHEET. SEE TABLE 3 ON STD DWG CB 10C FOR ADDITIONAL CONCRETE QUANTITIES.
3. DEDUCT CONCRETE DISPLACED BY PIPE(S) FROM THOSE CONCRETE QUANTITIES GIVEN IN SCHEDULE OF TABLE 1 ON STD DWG CB 10C.
4. WHEN FORMED INVERT IS REQUIRED, SEE TABLE 3 ON STD DWG CB 10C FOR ADDITIONAL CONCRETE QUANTITIES.
5. PROVIDE 2" CONCRETE COVER TO REINFORCING STEEL EXCEPT WHERE NOTED OTHERWISE.
6. UNLESS OTHERWISE SHOWN, ALL DIMENSIONS ARE OUT TO OUT OF BARS.
7. WEIGHT QUANTITIES FOR GRATE AND FRAME, AND SOLID COVER AND FRAME ARE SHOWN FOR INFORMATION ONLY.
8. SEE STD DWG CB 10A FOR DIMENSIONS.
9. PIPE DIAMETERS SHOWN IN TABLES AND SCHEDULE ARE INSIDE DIAMETERS.
10. MAXIMUM PIPE DIMENSIONS SHOWN IN SCHEDULE OF INSTALLATION ARE FOR PIPES PERPENDICULAR TO WALLS OF BOX. DETERMINE CLEARANCES FOR SKEWED PIPES.
11. SEE STD DWG GF 6 FOR MANHOLE STEP DETAILS.
12. USE #5 BARS FOR ALL REINFORCING @ 12" UNLESS OTHERWISE SHOWN.
13. WHEN SOLID COVER IS REQUIRED, ADD .023 CU.YDS. OF CONCRETE TO THOSE QUANTITIES GIVEN IN SCHEDULE OF INSTALLATION AND ADD 3" TO EACH D-BAR, AND 1.0 LB TO REINFORCING STEEL QUANTITIES.
14. USE COATED DEFORMED BILLET REINFORCING STEEL BARS CONFORMING TO AASHTO M 284, OR M 111 AND M 31 GRADE 60 RESPECTIVELY.
15. CHAMFER ALL EXPOSED CONCRETE CORNERS $^3/_4$" EXCEPT WHERE NOTED OTHERWISE.
16. USE CLASS AA(AE) CAST CONCRETE EXCEPT WHERE SPECIFIED OTHERWISE.

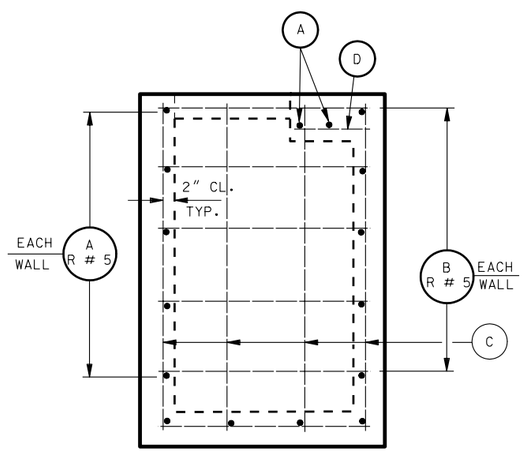

SECTION A-A

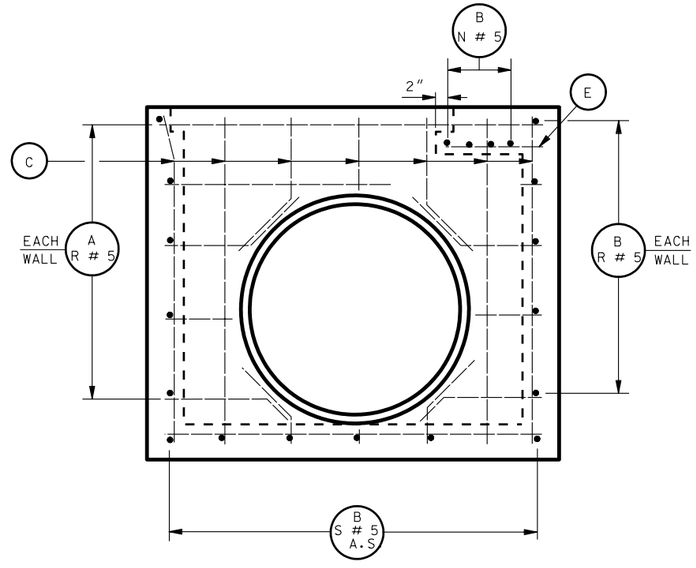

SECTION B-B

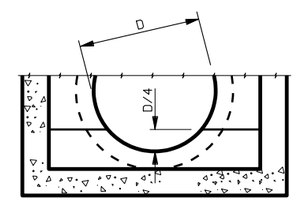

FORMED INVERT

REVISIONS

NO.	DATE	APPR.	REMARKS

UTAH DEPARTMENT OF TRANSPORTATION
STANDARD DRAWINGS FOR ROAD AND BRIDGE CONSTRUCTION
SALT LAKE CITY, UTAH

RECOMMENDED FOR APPROVAL — JULY 03,2002 DATE

CHAIRMAN STANDARDS COMMITTEE APPROVED — JULY 03,2002 DATE

DEPUTY DIRECTOR

STANDARD DRAWING TITLE

STANDARD CATCH BASIN AND CLEANOUT BOX SECTION DETAILS

STD DWG

CB 10B

COLUMN "A"

LINE	NO. of MANHOLE STEPS	R	DIMENSIONS H	DIMENSIONS K	DIMENSIONS T	REINFORCING STEEL A LENGTH	A NO	B LENGTH	B NO	C NO.=16 LENGTH	D NO.=4 LENGTH	QUANTITIES CONC. CU. YD.	QUANTITIES REINF. STEEL LBS.
1	--	4	3'-10	2'-6	6"	4'-8	14	3'-2	15	3'-5	1'-0	1.365	179
2	2	4	4'-4	3'-0			14		15	3'-11		1.504	187
3	2	5	4'-10	3'-6			16		17	4'-5		1.642	212
4	3	5	5'-4	4'-0			16		17	4'-11		1.781	220
5	3	6	5'-10	4'-6			18		19	5'-5		1.920	245
6	4	6	6'-4	5'-0			18		19	5'-11		2.059	253
7	4	7	6'-10	5'-6			20		21	6'-5		2.198	278
8	5	7	7'-4	6'-0			20		21	6'-11		2.337	286
9	5	8	7'-10	6'-6			22		23	7'-5		2.476	311
10	6	8	8'-4	7'-0			22		23	7'-11		2.615	319
11	6	9	8'-10	7'-6			24		25	8'-5		2.754	344
12	7	9	9'-4	8'-0			24		25	8'-11		2.892	352
13	7	10	9'-10	8'-6			26		27	9'-5		3.031	377
14	8	10	10'-4	9'-0			26		27	9'-11		3.170	385
15	8	11	10'-10	9'-6			28		29	10'-5		3.309	410
16	9	11	11'-4	10'-0			28		29	10'-11		3.448	418
17	9	12	11'-10	10'-6			30		31	11'-5		3.587	443
18	10	12	12'-4	11'-0	6"	4'-8	30	3'-2	31	11'-11	1'-0	3.726	451
19	10	13	12'-11	11'-6	7"	4'-10	32	3'-4	33	12'-6	1'-1	4.610	489
20	11	13	13'-5	12'-0			32		33	13'-0		4.775	498
21	11	14	13'-11	12'-6			34		35	13'-6		4.941	523
22	12	14	14'-5	13'-0			34		35	14'-0		5.107	531
23	12	15	14-11	13'-6			36		37	14'-6		5.272	552
24	13	15	15'-5	14'-0			36		37	15'-0		5.438	565
25	13	16	15'-11	14'-6			38		39	15'-6		5.604	590
26	14	16	16'-5	15'-0			38		39	16'-0		5.769	599
27	14	17	16-11	15'-6			40		41	16'-6		5.935	624
28	15	17	17'-5	16'-0			40		41	17'-0		6.100	632
29	15	18	17'-11	16'-6			42		43	17'-6		6.266	658
30	16	18	18'-5	17'-0			42		43	18'-0		6.432	666
31	16	19	18'-11	17'-6			44		45	18'-6		6.597	692
32	17	19	19'-5	18'-0			44		45	19'-0		6.763	700
33	17	20	19'-11	18'-6			46		47	19'-6		6.929	725
34	18	20	20'-5	19'-0			46		47	20'-0		7.094	734
35	18	21	20'-11	19'-6			48		49	20'-6		7.260	759
36	19	21	21'-5	20'-0			48		49	21'-0		7.426	767
37	19	22	21'-11	20'-6			50		51	21'-6		7.591	793
38	20	22	22'-5	21'-0	7"	4'-10	50	3'-4	51	22'-0	1'-1	7.757	801
39	20	23	23'-0	21'-6	8"	5'-0	52	3'-6	53	22'-7	1'-2	9.259	846
40	21	23	23'-6	22'-0			52		53	23'-1		9.452	855
41	21	24	24'-0	22'-6			54		55	23'-7		9.646	881
42	22	24	24'-6	23'-0			54		55	24'-1		9.839	889
43	22	25	25'-0	23'-6			56		57	24'-7		10.032	915
44	23	25	25'-6	24'-0			56		57	25'-1		10.226	924
45	23	26	26'-0	24'-6			58		59	25'-7		10.419	950
46	24	26	26'-6	25'-0			58		59	26'-1		10.613	958
47	24	27	27'-0	25'-6			60		61	26'-7		10.806	984
48	25	27	27'-6	26'-0			60		61	27'-1		11.000	992
49	25	28	28'-0	26'-6			62		63	27'-7		11.193	1018
50	26	28	28'-6	27'-0			62		63	28'-1		11.386	1027
51	26	29	29'-0	27'-6			64		65	28'-7		11.580	1053
52	27	29	29'-6	28'-0			64		65	29'-1		11.773	1055
53	27	30	30'-0	28'-6			66		67	29'-7		11.967	1087
54	28	30	30'-6	29'-0	8"	5'-0	66	3'-6	67	30'-1	1'-2	12.160	1096

N=1 S=6 W=4'-0 M=0'-4

COLUMN "B"

LINE	DIMENSIONS H	DIMENSIONS K	DIMENSIONS T	REINFORCING STEEL A LENGTH	A NO	B LENGTH	B NO	C NO.=18 LENGTH	D NO.=4 LENGTH	E NO.=2 LENGTH	QUANTITIES CONC. CU. YD.	QUANTITIES REINF. STEEL LBS.
1	----		---	----	--	---	--	----	---	---	----	----
2	----		---	----	--	---	--	----	---	---	----	----
3	----		---	----	--	---	--	----	---	---	----	----
4	----		---	----	--	---	--	----	---	---	----	----
5	----		---	----	--	---	--	----	---	---	----	----
6	6'-4	5'-0	6"	5'-8	18	3'-2	23	5'-11	1'-0	1'-6	2.417	301
7	6'-10	5'-6			20		25	6'-5			2.575	321
8	7'-4	6'-0			20		25	6'-11			2.732	338
9	7'-10	6'-6			22		27	7'-5			2.889	366
10	8'-4	7'-0			22		27	7'-11			3.047	375
11	8'-10	7'-6			24		29	8'-5			3.204	403
12	9'-4	8'-0			24		29	8'-11			3.362	412
13	9'-10	8'-6			26		31	9'-5			3.519	440
14	10'-4	9'-0			26		31	9'-11			3.675	450
15	10'-10	9'-6			28		33	10'-5			3.834	477
16	11'-4	10'-0			28		33	10'-11			3.991	486
17	11'-10	10'-6			30		35	11'-5			4.149	515
18	12'-4	11'-0	6"	5'-8	30	3'-2	35	11'-11	1'-0	1'-6	4.305	524
19	12'-11	11'-6	7"	5'-10	32	3'-4	37	12'-6	1'-1	1'-7	5.299	566
20	13'-5	12'-0			32		37	13'-0			5.486	575
21	13'-11	12'-6			34		39	13'-6			5.673	604
22	14'-5	13'-0			34		39	14'-0			5.861	613
23	14'-11	13'-6			36		41	14'-6			6.048	642
24	15'-5	14'-0			36		41	15'-0			6.235	651
25	15'-11	14'-6			38		43	15'-6			6.422	680
26	16'-5	15'-0			38		43	16'-0			6.609	689
27	16'-11	15'-6			40		45	16'-6			6.797	637
28	17'-5	16'-0			40		45	17'-0			6.984	727
29	17'-11	16'-6			42		47	17'-6			7.171	755
30	18'-5	17'-0			42		47	18'-0			7.358	765
31	18'-11	17'-6			44		49	18'-6			7.545	793
32	19'-5	18'-0			44		49	19'-0			7.733	803
33	19'-11	18'-6			46		51	19'-6			7.920	831
34	20'-5	19'-0			46		51	20'-0			8.107	841
35	20'-11	19'-6			48		53	20'-6			8.294	869
36	21'-5	20'-0			48		53	21'-0			8.481	878
37	21'-11	20'-6			50		55	21'-6			8.669	907
38	22'-5	21'-0	7"	5'-10	50	3'-4	55	22'-0	1'-1	1'-7	8.856	916
39	23'-0	21'-6	8"	6'-0	52	3'-6	57	22'-7	1'-2	1'-8	10.533	966
40	23'-6	22'-0			52		57	23'-1			10.752	975
41	24'-0	22'-6			54		59	23'-7			10.970	1004
42	24'-6	23'-0			54		59	24'-1			11.188	1014
43	25'-0	23'-6			56		61	24'-7			11.406	1043
44	25'-6	24'-0			56		61	25'-1			11.629	1052
45	26'-0	24'-6			58		63	25'-7			11.842	1082
46	26'-6	25'-0			58		63	26'-1			12.060	1091
47	27'-0	25'-6			60		65	26'-7			12.278	1120
48	27'-6	26'-0			60		65	27'-1			12.496	1130
49	28'-0	26'-6			62		67	27'-7			12.714	1159
50	28'-6	27'-0			62		67	28'-1			12.933	1168
51	29'-0	27'-6			64		69	28'-7			13.151	1197
52	29'-6	28'-0			64		69	29'-1			13.369	1207
53	30'-0	28'-6			66		71	29'-7			13.587	1236
54	30'-6	29'-0	8"	6'-0	66	3'-6	71	30'-1	1'-2	1'-8	13.805	1245

N=4 S=7 W=5'-0 M=1'-4

COLUMN "C"

LINE	DIMENSIONS H	DIMENSIONS K	DIMENSIONS T	REINFORCING STEEL A LENGTH	A NO	B LENGTH	B NO	C NO.=18 LENGTH	D NO.=4 LENGTH	E NO.=2 LENGTH	QUANTITIES CONC. CU. YD.	QUANTITIES REINF. STEEL LBS.
1	----	----	---	----	--	----	--	----	----	----	----	----
2	----	----	---	----	--	----	--	----	----	----	----	----
3	----	----	---	----	--	----	--	----	----	----	----	----
4	----	----	---	----	--	----	--	----	----	----	----	----
5	----	----	---	----	--	----	--	----	----	----	----	----
6	----	----	---	----	--	----	--	----	----	----	----	----
7	6'-10	5'-6	6"	6'-2	20	3'-2	26	6'-5	1'-0	2'-0	2.763	343
8	7'-4	6'-0			20		26	6'-11			2.930	353
9	7'-10	6'-6			22		28	7'-5			3.096	382
10	8'-4	7'-0			22		28	7'-11			3.263	391
11	8'-10	7'-6			24		30	8'-5			3.430	420
12	9'-4	8'-0			24		30	8'-11			3.596	429
13	9'-10	8'-6			26		32	9'-5			3.763	458
14	10'-4	9'-0			26		32	9'-11			3.930	467
15	10'-10	9'-6			28		34	10'-5			4.096	496
16	11'-4	10'-0			28		34	10'-11			4.263	506
17	11'-10	10'-6			30		36	11'-5			4.430	535
18	12'-4	11'-0	6"	6'-2	30	3'-2	36	11'-11	1'-0	2'-0	4.596	544
19	12'-11	11'-6	7"	6'-4	32	3'-4	38	12'-6	1'-1	2'-1	5.644	587
20	13'-5	12'-0			32		38	13'-0			5.842	596
21	13'-11	12'-6			34		40	13'-6			6.040	626
22	14'-5	13'-0			34		40	14'-0			6.238	635
23	14'-11	13'-6			36		42	14'-6			6.436	665
24	15'-5	14'-0			36		42	15'-0			6.634	674
25	15'-11	14'-6			38		44	15'-6			6.832	704
26	16'-5	15'-0			38		44	16'-0			7.030	713
27	16'-11	15'-6			40		46	16'-6			7.228	743
28	17'-5	16'-0			40		46	17'-0			7.426	752
29	17'-11	16'-6			42		48	17'-6			7.624	782
30	18'-5	17'-0			42		48	18'-0			7.822	791
31	18'-11	17'-6			44		50	18'-6			8.020	821
32	19'-5	18'-0			44		50	19'-0			8.215	830
33	19'-11	18'-6			46		52	19'-6			8.416	860
34	20'-5	19'-0			46		52	20'-0			8.615	869
35	20'-11	19'-6			48		54	20'-6			8.812	899
36	21'-5	20'-0			48		54	21'-0			9.011	908
37	21'-11	20'-6			50		56	21'-6			9.209	937
38	22'-5	21'-0	7"	6'-4	50	3'-4	56	22'-0	1'-1	2'-1	9.407	946
39	23'-0	21'-6	8"	6'-6"	52	3'-6	58	22'-7	1'-2	2'-2	11.171	998
40	23'-6	22'-0			52		58	23'-1			11.401	1007
41	24'-0	22'-6			54		60	23'-7			11.632	1037
42	24'-6	23'-0			54		60	24'-1			11.862	1047
43	25'-0	23'-6			56		62	24'-7			12.093	1077
44	25'-6	24'-0			56		62	25'-1			12.323	1086
45	26'-0	24'-6			58		64	25'-7			12.554	1117
46	26'-6	25'-0			58		64	26'-1			12.784	1126
47	27'-0	25'-6			60		66	26'-7			13.015	1156
48	27'-6	26'-0			60		66	27'-1			13.245	1166
49	28'-0	26'-6			62		68	27'-7			13.476	1196
50	28'-6	27'-0			62		68	28'-1			13.706	1205
51	29'-0	27'-6			64		70	28'-7			13.937	1235
52	29'-6	28'-0			64		70	29'-1			14.167	1245
53	30'-0	28'-6			66		72	29'-7			14.398	1275
54	30'-6	29'-0	8"	6'-6	66	3'-6	72	30'-1	1'-2	2'-2	14.628	1285

N=5 S=7 W=5'-5 M=1'-10

COLUMN "D"

LINE	DIMENSIONS H	DIMENSIONS K	DIMENSIONS T	REINFORCING STEEL A LENGTH	A NO	B LENGTH	B NO	C NO.=20 LENGTH	D NO.=4 LENGTH	E NO.=2 LENGTH	QUANTITIES CONC. CU. YD.	QUANTITIES REINF. STEEL LBS.	LINE
1	----	----	---	----	--	----	--	----	----	----	----	----	1
2	----	----	---	----	--	----	--	----	----	----	----	----	2
3	----	----	---	----	--	----	--	----	----	----	----	----	3
4	----	----	---	----	--	----	--	----	----	----	----	----	4
5	----	----	---	----	--	----	--	----	----	----	----	----	5
6	----	----	---	----	--	----	--	----	----	----	----	----	6
7	----	----	---	----	--	----	--	----	----	----	----	----	7
8	7'-4	6'-0	6"	6'-8	20	3'-2	28	6'-11	1'-0	2'-6	3.127	385	8
9	7'-10	6'-6			22		30	7'-5			3.303	417	9
10	8'-4	7'-0			22		30	7'-11			3.479	427	10
11	8'-10	7'-6			24		32	8'-5			3.655	458	11
12	9'-4	8'-0			24		32	8'-11			3.831	468	12
13	9'-10	8'-6			26		34	9'-5			4.007	499	13
14	10'-4	9'-0			26		34	9'-11			4.182	510	14
15	10'-10	9'-6			28		36	10'-5			4.358	541	15
16	11'-4	10'-0			28		36	10'-11			4.534	551	16
17	11'-10	10'-6			30		38	11'-5			4.710	582	17
18	12'-4	11'-0	6"	6'-8	30	3'-2	38	11'-11	1'-0	2'-6	4.886	592	18
19	12'-11	11'-6	7"	6'-10	32	3'-4	40	12'-6	1'-1	2'-7	5.988	638	19
20	13'-5	12'-0			32		40	13'-0			6.197	648	20
21	13'-11	12'-6			34		42	13'-6			6.406	680	21
22	14'-5	13'-0			34		42	14'-0			6.615	690	22
23	14'-11	13'-6			36		44	14'-6			6.824	722	23
24	15'-5	14'-0			36		44	15'-0			7.032	733	24
25	15'-11	14'-6			38		46	15'-6			7.241	764	25
26	16'-5	15'-0			38		46	16-0			7.450	775	26
27	16'-11	15'-6			40		48	16'-6			7.659	806	27
28	17'-5	16'-0			40		48	17'-0			7.868	817	28
29	17'-11	16'-6			42		50	17'-6			8.076	848	29
30	18'-5	17'-0			42		50	18'-0			8.285	859	30
31	18'-11	17'-6			44		52	18'-6			8.494	890	31
32	19'-5	18'-0			44		52	19'-0			8.703	901	32
33	19'-11	18'-6			46		54	19'-6			8.912	932	33
34	20'-5	19'-0			46		54	20'-0			9.120	948	34
35	20'-11	19'-6			48		56	20'-6			9.329	975	35
36	21'-5	20'-0			48		56	21'-0			9.538	985	36
37	21'-11	20'-6			50		58	21'-6			9.747	1017	37
38	22'-5	21'-0	7"	6'-10	50	3'-4	58	22'-0	1'-1	2'-7	9.965	1027	38
39	23'-0	21'-6	8"	7'-0	52	3'-6	60	22'-7	1'-2	2'-8	11.808	1080	39
40	23'-6	22'-0			52		60	23'-1			12.051	1091	40
41	24'-0	22'-6			54		62	23'-7			12.294	1123	41
42	24'-6	23'-0			54		62	24'-1			12.536	1134	42
43	25'-0	23'-6			56		64	24'-7			12.779	1166	43
44	25'-6	24'-0			56		64	25'-1			13.022	1176	44
45	26'-0	24'-6			58		66	25'-7			13.265	1208	45
46	26'-6	25'-0			58		66	26'-1			13.508	1219	46
47	27'-0	25'-6			60		68	26'-7			13.750	1251	47
48	27'-6	26'-0			60		68	27'-1			13.993	1262	48
49	28'-0	26'-6			62		70	27'-7			14.236	1294	49
50	28'-6	27'-0			62		70	28'-1			14.479	1304	50
51	29'-0	27'-6			64		72	28'-7			14.722	1337	51
52	29'-6	28'-0			64		72	29'-1			14.964	1347	52
53	30'-0	28'-6			66		74	29'-7			15.207	1380	53
54	30'-6	29'-0	8"	7'-0	66	3'-6	74	30'-1	1'-2	2'-8	15.450	1390	54

N=6 S=8 W=6'-0 M=2'-4

TABLE 1 : CONCRETE DISPLACED BY PIPES:

PIPE SIZES R.C.P.	PIPE SIZES C.M.P.	6" CU. YD.	7" CU. YD.	8" CU. YD.
42"	48"	0.233	0.271	0.310
48"	60"	0.340	0.396	0.453
54"	66"	0.427	0.498	0.569
60"	72"	0.524	0.611	0.698
	54"	0.295	0.344	0.393

TABLE 2 : MAXIMUM PIPE SIZE TO BE USED:

	R.C.P.	C.M.P.
COLUMN A	42"	48"
COLUMN B	48"	60"
COLUMN C	54"	66"
COLUMN D	60"	72"

TABLE 3 : CONCRETE NEEDED FOR FORMED INVERT:

PIPES SIZES	R.C.P. CU. YD.	C.M.P. CU. YD.
42"	0.273	----
48"	0.428	0.143
54"	----	----
60"	0.617	0.223
66"	----	0.270
72"	----	0.322

STRUCTURAL STEEL :

RECTANGULAR GRATE & FRAME = 340 LBS
BICYCLE - SAFE GRATE & FRAME = 365 LBS.
SOLID COVER & FRAME = 474 LBS.

REVISIONS

NO.	DATE	APPR.	REMARKS

UTAH DEPARTMENT OF TRANSPORTATION
STANDARD DRAWINGS FOR ROAD AND BRIDGE CONSTRUCTION
SALT LAKE CITY, UTAH

RECOMMENDED FOR APPROVAL — JULY 03,2002 DATE
CHAIRMAN STANDARDS COMMITTEE
APPROVED — JULY 03,2002 DATE
DEPUTY DIRECTOR

STANDARD CATCH BASIN AND CLEANOUT BOX
SCHEDULE OF INSTALLATION
42" TO 60" RCP
48" TO 72" CMP
STANDARD DRAWING TITLE

STD DWG
CB 10C

CRASH CUSHIONS

TYPE A,B & D

TYPE E

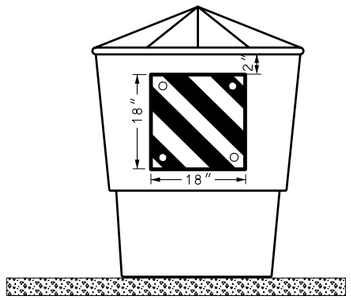

PLACE THE APPROPRIATE OBJECT MARKER PANEL OR SHEETING 2 INCHES FROM THE TOP OF THE LEAD BARREL OF THE ARRAY.

MARKER POST NOT REQUIRED.

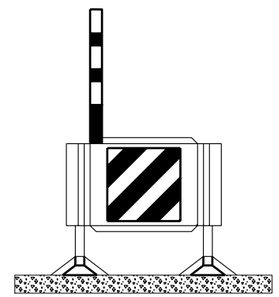

OBJECT MARKER PLATE OR SHEETING: ATTACH TO THE TOP FRONT AND SIDE OF UNIT NEAREST THE APPROACH LANE OF TRAFFIC. IN A GORE AREA CENTER OBJECT MARKER.

* APPROVED SYSTEM TYPE D, REACT-350 HAS AN OBJECT MARKER SUPPLIED WITH THE SYSTEM, MARKER POST IS NOT REQUIRED.

TYPE A,B & D

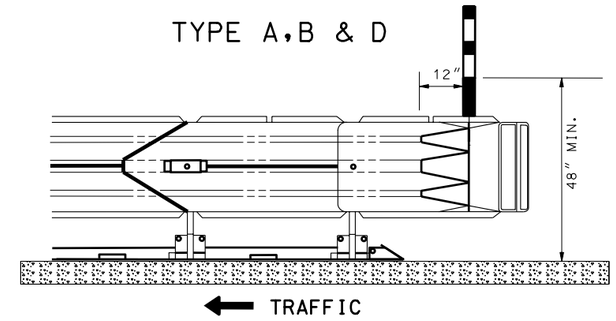

MARKER POST:

MOUNT ON THE SIDE OF THE APPROACH TRAFFIC, 12 INCHES FROM THE BACK EDGE OF PLASTIC NOSE PIECE. IN GORE AREAS MOUNT ON BOTH SIDES.

MARKER PLATE

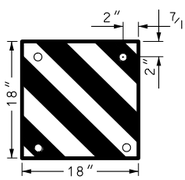

USE A 0.032 GAUGE ALUMINUM MARKER PLATE WITH APPROPRIATE MARKER SHEETING

USE FOUR 1 INCH X 3/8 INCH ZINC PLATED BOLTS WITH WASHERS AND NUTS TO MOUNT PLATE.

SELF ADHESIVE SHEETING WITH APPROPRIATE OBJECT MARKER DESIGNATION CAN BE USED AS A SUBSTITUTE.

CRASH CUSHION TYPE F.

THIS SYSTEM HAS A BELTED OR PLASTIC NOSE PIECE AND STEEL POSTS.OBJECT MARKER MOUNTING SIMILAR TO TYPE H AND MARKER POST IS MOUNTED ON THE NOSE PIECE SIMILAR TO TYPE B.

TYPE H

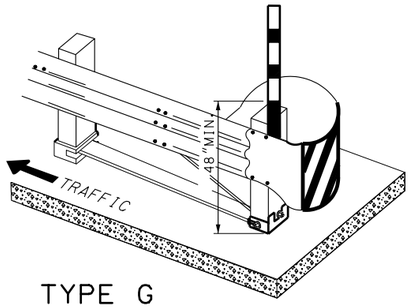

TYPE C

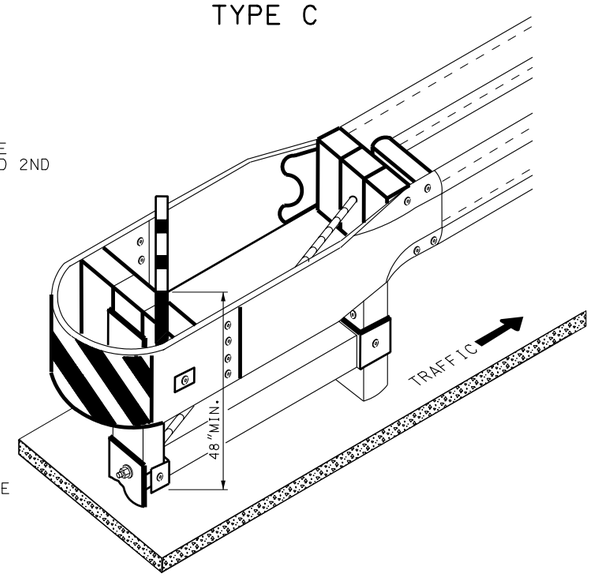

OBJECT MARKER PLATE OR SHEETING: ATTACH TO THE FRONT OF SYSTEM TOP, AND OFFSET 6 INCHES FROM CENTER TOWARD THE APPROACH LANE OF TRAFFIC.

TYPE G

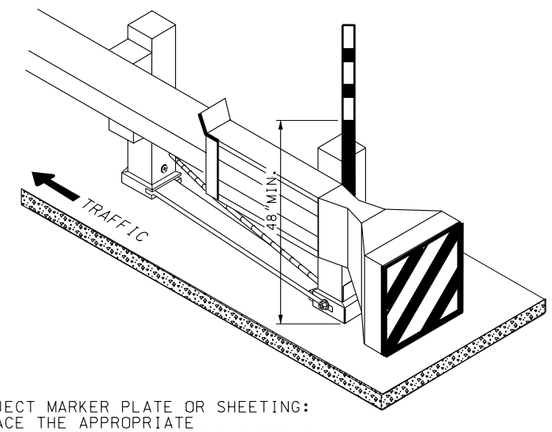

OBJECT MARKER PLATE OR SHEETING: PLACE THE APPROPRIATE OBJECT MARKER PANEL TO THE FRONT OF THE SYSTEMS.

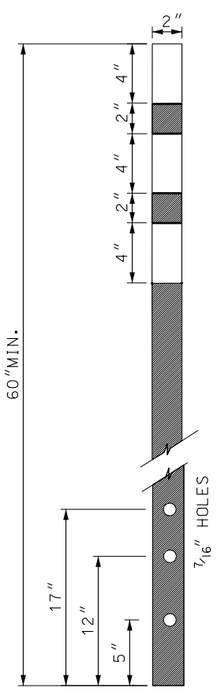

MARKER POST

MARKER POST

PLACE YELLOW BANDS OF REFLECTIVE SHEETING AS SPECIFIED BY STANDARD SPECIFICATION, SECTION 02891, PART 2 AT THE TOP OF THE POST WITH A 2 INCH SPACE BETWEEN THE 1ST AND 2ND BAND AND THE 2ND AND 3RD BAND. DRILL THREE MOUNTING HOLES, 7/16 INCH IN DIAMETER, MEASURED FROM THE BOTTOM UP 5 INCHES, 12 INCHES AND 17 INCHES.

MARKER POST MOUNTING

MOUNT MARKER POST 48 INCHES FROM THE BOTTOM OF THE THIRD YELLOW BAND TO GROUND LEVEL. DO NOT COLLAPSE MARKER POST WHEN SECURING TO SYSTEM.

WOOD POST: PLACE MARKER POST ON THE FRONT OF THE FIRST POST OF SYSTEM AND SECURE WITH THREE 3/8 X 4 INCH ZINC PLATED LAG BOLTS AND WASHERS.

METAL POST: PLACE MARKER POST ON THE FRONT OF THE FIRST POST OF SYSTEM AND SECURE WITH THREE 3/8 X 3 INCH ZINC PLATED BOLTS WITH NUTS AND WASHERS.

PLASTIC NOSE PIECES: PLACE MARKER POST 12 INCHES FORWARD FROM THE BACK EDGE OF THE NOSE PIECE AND SECURE WITH THREE 3/8 X 3 INCH ZINC PLATED BOLTS WITH WASHERS.

NOTE: 1

USE MARKER POST UNLESS OTHERWISE SPECIFIED. USE IS OPTIONAL WHEN SNOW ACCUMULATION IS NOT A CONCERN.

NOTE: 2

SHEETING TO COMPLY WITH UDOT STANDARD SPECIFICATION 02842 FOR FLEXIBLE SHEETING.

MARKER POST

REVISIONS				
NO.	DATE	APPR.		REMARKS

UTAH DEPARTMENT OF TRANSPORTATION

STANDARD DRAWINGS FOR ROAD AND BRIDGE CONSTRUCTION
SALT LAKE CITY, UTAH

RECOMMENDED FOR APPROVAL — JULY 03,2002 DATE

CHAIRMAN STANDARDS COMMITTEE APPROVED — JULY 03,2002 DATE

DEPUTY DIRECTOR

CRASH CUSHION MARKINGS

STANDARD DRAWING TITLE

STD DWG

CC 1

PLAN A1: SPEEDS UP TO 40 MPH

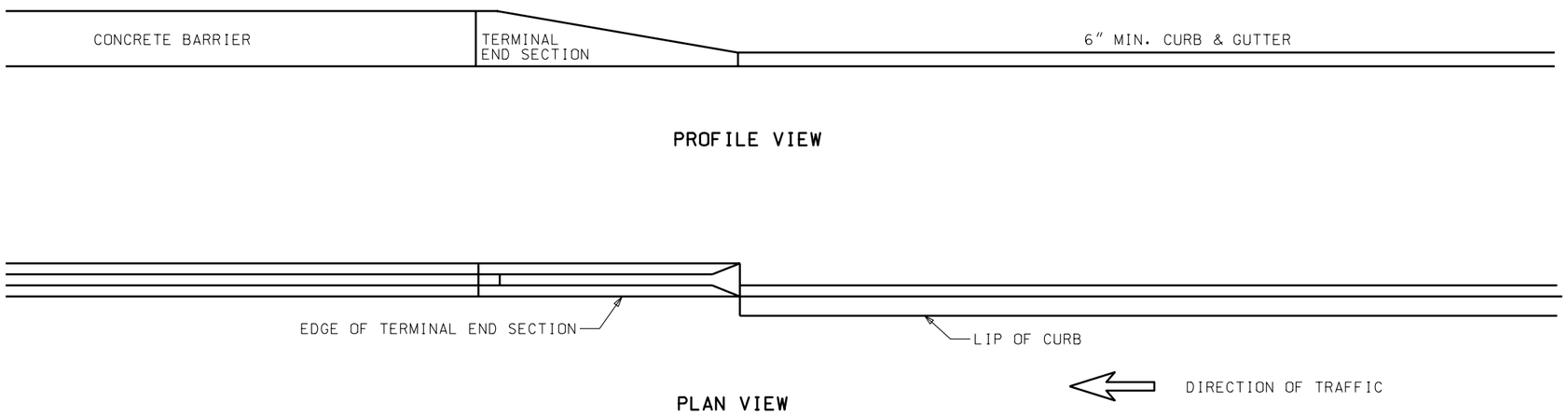

PLAN A2: SPEEDS OVER 40 MPH

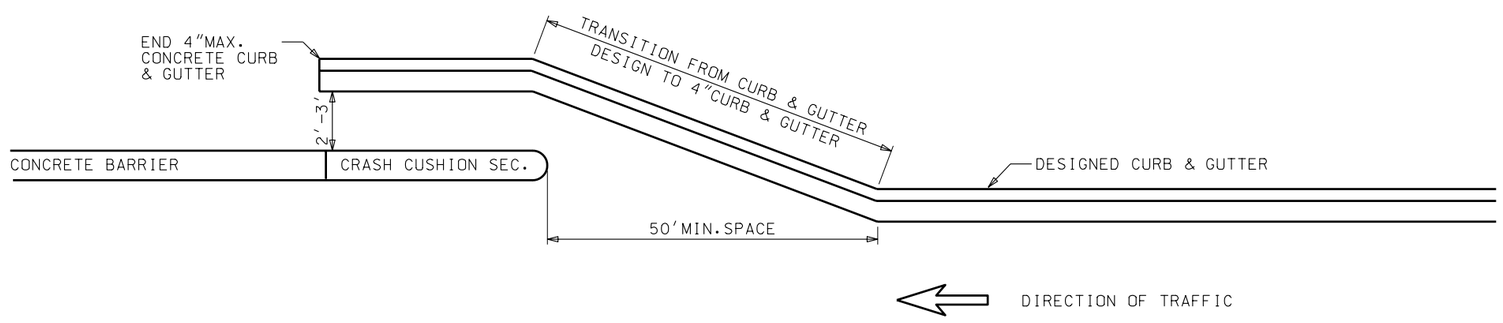

REVISIONS

NO.	DATE	APPR.	REMARKS

UTAH DEPARTMENT OF TRANSPORTATION
STANDARD DRAWINGS FOR ROAD AND BRIDGE CONSTRUCTION
SALT LAKE CITY, UTAH

RECOMMENDED FOR APPROVAL — JULY 03,2002 DATE

CHAIRMAN STANDARDS COMMITTEE APPROVED — JULY 03,2002 DATE

DEPUTY DIRECTOR

CRASH CUSHION DRAINAGE DETAILS GUIDELINE A

STANDARD DRAWING TITLE

STD DWG
CC 2

CRASH CUSHION CONNECTION

NOTE:
REFER TO MANUFACTURER'S SPECIFICATIONS FOR CERTIFICATION REQUIREMENTS.

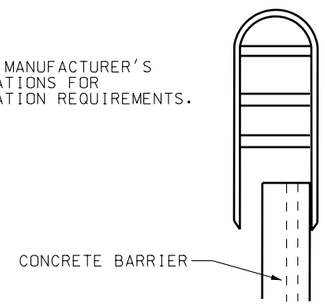

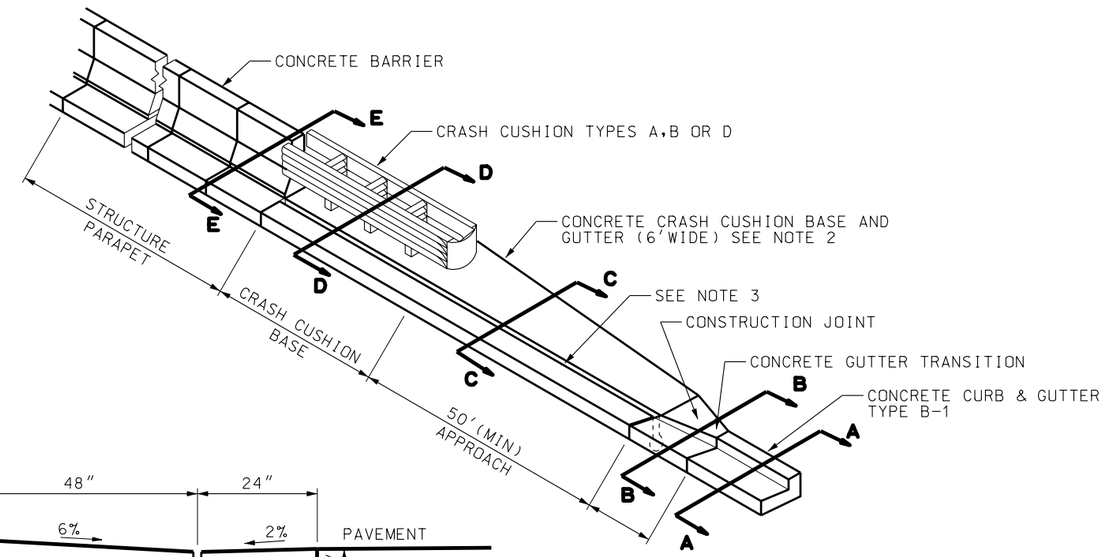

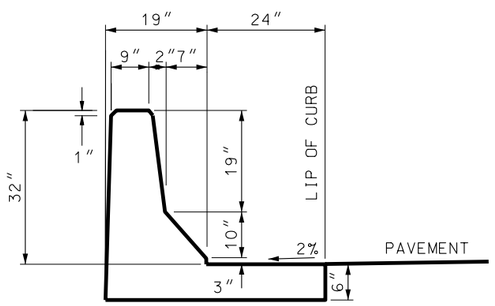

SECTION E-E

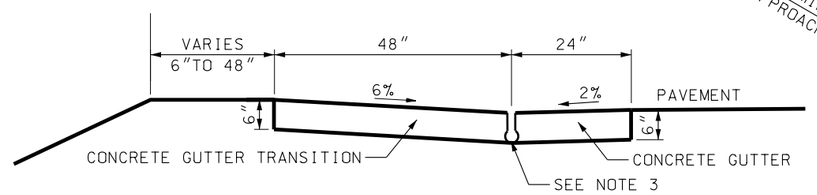

SECTION C-C

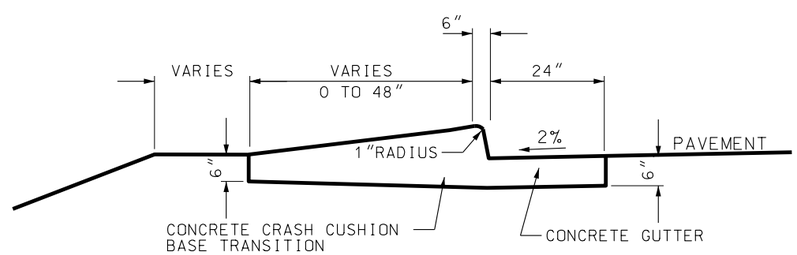

SECTION B-B

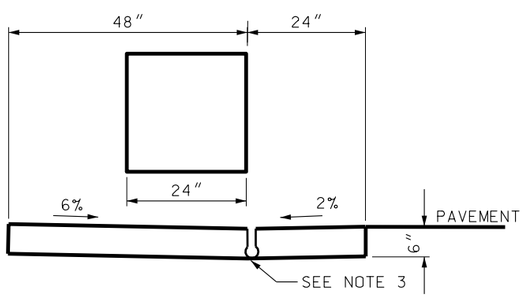

SECTION D-D

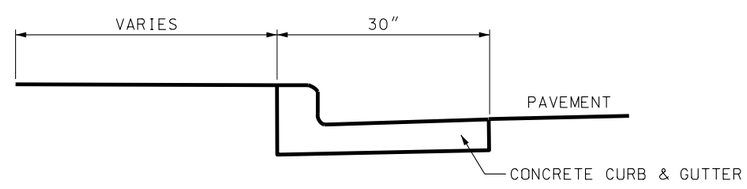

SECTION A-A

NOTES:

1. ALTERNATIVE INSTALLATION TO GUIDELINES A PLAN 2A STD DWG CC 2, FOR CRASH CUSHION TYPES A, B & D.
2. DESIGN A DRAINAGE SYSTEM THAT DOES NOT CREATE A RAISED CURB IN FRONT OF OR TO THE SIDES OF THE CRUSH CUSHION SYSTEM WHEN PARALLEL ROAD SYSTEM IS 1% OR GREATER. A SLOTTED DRAINAGE SYSTEM IS AN OPTION.
3. CAST, IN A MONOLITHIC POUR, CRASH CUSHION BASE AND GUTTER FROM REAR OF SYSTEM TO THE APPROACH TRANSITION WITH CURB AND GUTTER.

REVISIONS

NO.	DATE	APPR.	REMARKS

UTAH DEPARTMENT OF TRANSPORTATION
STANDARD DRAWINGS FOR ROAD AND BRIDGE CONSTRUCTION
SALT LAKE CITY, UTAH

RECOMMENDED FOR APPROVAL — JULY 03,2002 DATE
CHAIRMAN STANDARDS COMMITTEE APPROVED — JULY 03,2002 DATE
DEPUTY DIRECTOR

STANDARD DRAWING TITLE
CRASH CUSHION DRAINAGE DETAILS GUIDELINE B

STD DWG
CC 3

SHOULDER APPLICATION

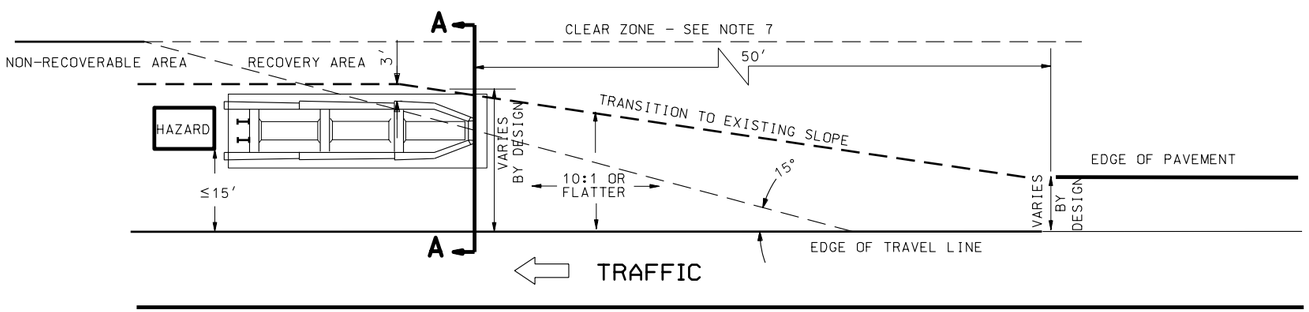

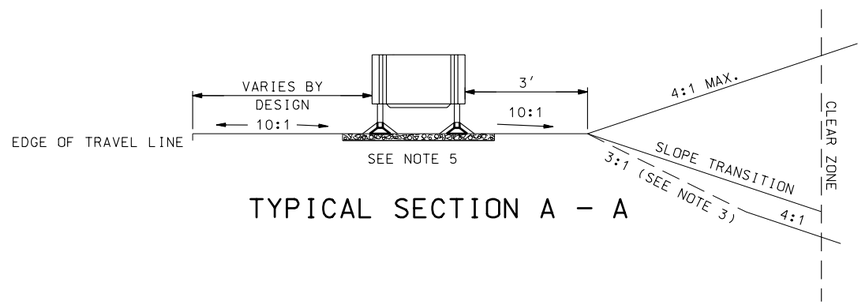

TYPICAL SECTION A - A

GORE APPLICATION AREA

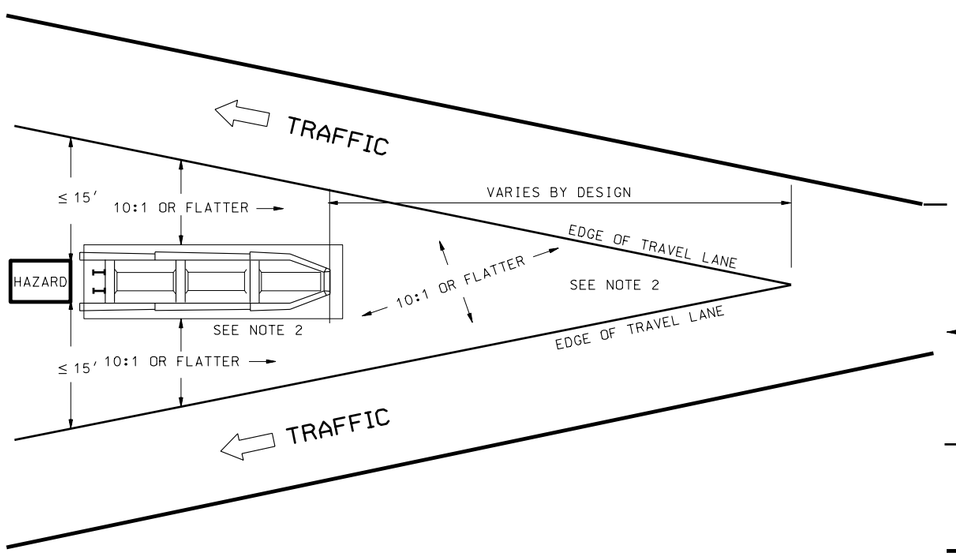

MEDIAN APPLICATION

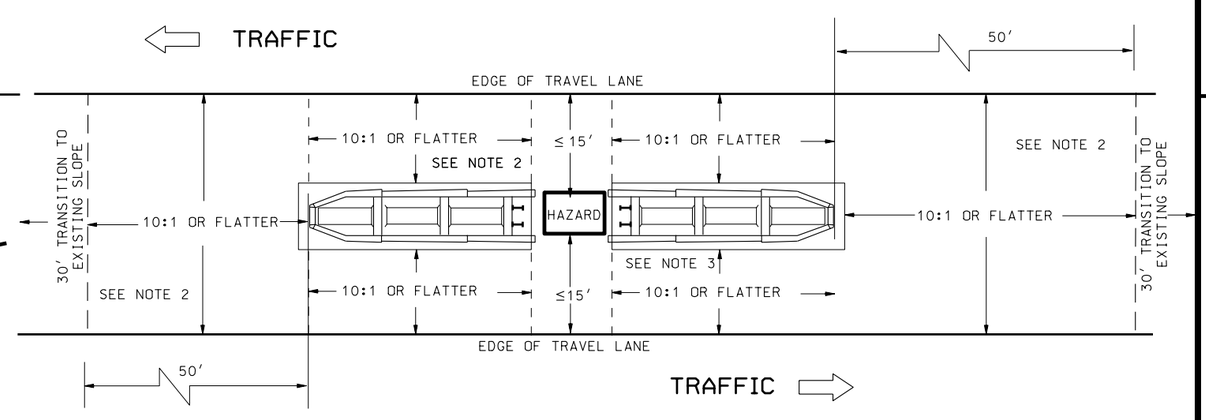

NOTES:

1. CRASH CUSHION TYPE A: QUADGUARD, MANUFACTURED BY ENERGY ABSORPTION SYSTEMS, TO PROTECT HAZARDS FROM 37 INCHES TO 90 INCHES.

   CRASH CUSHION TYPE B: QUADGUARD, MANUFACTURED BY ENERGY ABSORPTION SYSTEMS, TO PROTECT HAZARDS UP TO 36 INCHES.

   CRASH CUSHION TYPE D: QUADGUARD ELITE AND QUADGUARD LMC, MANUFACTURED BY ENERGY ABSORPTION SYSTEMS, AND REACT 350, MANUFACTURED BY ROADWAY SAFETY SERVICES. TYPE D SYSTEMS PROTECT HAZARDS UP TO 90 INCHES IN WIDTH, TYPE D SYSTEMS ARE USED WHERE ONE OR MORE IMPACTS PER YEAR ARE ANTICIPATED, OR WHEN REPAIR HISTORY INDICATES TWO OR MORE IMPACTS OVER A THREE YEAR PERIOD.

2. ALL APPLICATIONS REQUIRE THE USE OF A 10:1 SLOPE OR FLATTER TO THE FRONT AND SIDE APPROACHES. USE A 10:2 OR FLATTER SLOPE AT THE REAR OF THE SYSTEM WHEN TRAFFIC ALSO APPROACHES FROM THE REAR OF THE SYSTEM.

3. USE A 4:1 OR FLATTER FILL SLOPE AND A RECOVERY AREA IF IMPRACTICAL, USE A MAXIMUM 3:1 FILL SLOPE AND A RECOVERY AREA ESTABLISHED AT THE TOE OF 3:1 FILL SLOPE. WHEN USED WITH A CUT SLOPE, A 4:1 OR FLATTER CUT IS REQUIRED IN THE RECOVERY AREA.

4. USE A TRANSITION ELEMENT, AS PER MANUFACTURE'S SPECIFICATIONS, WHEN TRAFFIC APPROACHES THE REAR OF SYSTEM.

5. USE MANUFACTURE'S SPECIFICATIONS FOR PAD AND BACKUP REQUIREMENTS.

6. INSTALL PROPER MARKINGS AS PER STD DWG CC 1.

7. MAINTAIN AASHTO CLEAR ZONE REQUIREMENTS.

REVISIONS

NO.	DATE	APPR.	REMARKS

UTAH DEPARTMENT OF TRANSPORTATION
STANDARD DRAWINGS FOR ROAD AND BRIDGE CONSTRUCTION
SALT LAKE CITY, UTAH

RECOMMENDED FOR APPROVAL — JULY 03,2002 DATE

CHAIRMAN STANDARDS COMMITTEE APPROVED — JULY 03,2002 DATE

DEPUTY DIRECTOR

STANDARD DRAWING TITLE

DETAIL FOR PLACEMENT CRASH CUSHIONS TYPE A, B & D

STD DWG

CC 4

NOTES FOR ATTENUATOR TYPES C, PLACEMENT DRAWING

1. THE C.A.T., CRASH CUSHION ATTENUATING TERMINAL, MANUFACTURED BY SYRO, INC. AND THE BRAKEMASTER. MANUFACTURES BY ENERGY ABSORPTION SYSTEMS, ARE THE APPROVED TYPE C CRASH CUSHIONS. THESE SYSTEMS ARE PRIMARILY USED WITH SINGLE AND DOUBLE FACED GUARDRAIL, AND CAN TRANSITION INTO CONCRETE BARRIER OR BRIDGE PARAPETS. INSTALL ACCORDING TO MANUFACTURE'S AND UDOT SPECIFICATIONS.
2. THE C.A.T. REQUIRES A GRADED SURFACE. THE BREAKMASTER REQUIRES A STANDARD FIRM SURFACE OR COMPACTED SUBBASE AS A MINIMUM. COMPLETE ALL GRADING REQUIREMENTS PRIOR TO INSTALLATION OF THE SYSTEM.
3. USE 10:1 SLOPE TO ALL APPROACHES TO THE SYSTEM. USE A 4:1 SLOPE IN RECOVERY AREA WHEN SYSTEM IS USED IN A SHOULDER APPLICATION. A 3:1 FILL SLOPE MAY BE USED AND A RECOVERY AREA ESTABLISHED AT THE TOE OF 3:1 SLOPE.
4. APPROACHES AND RECOVERY AREA TO BE FREE OF FIXED OBJECTS.
5. SYSTEMS PLACED IN LOCATIONS WHERE TRAFFIC IS APPROACHING FROM THE REAR REQUIRE A TRANSITION ELEMENT AS PER MANUFACTURER'S SPECIFICATIONS.
6. INSTALL REQUIRED MARKINGS AS PER STD DWG CC 1.
7. MAINTAIN AASHTO CLEAR ZONE FOR SPEEDS GREATER THAN 40 MPH. DEPENDING ON SYSTEM OFFSET. CLEAR ZONE MAY EXTEND OUTSIDE OF RECOVERY AREA.
8. USE CURRENT AASHTO ROADSIDE DESIGN GUIDE TO DETERMINE LENGTH OF NEED.

SHOULDER APPLICATION

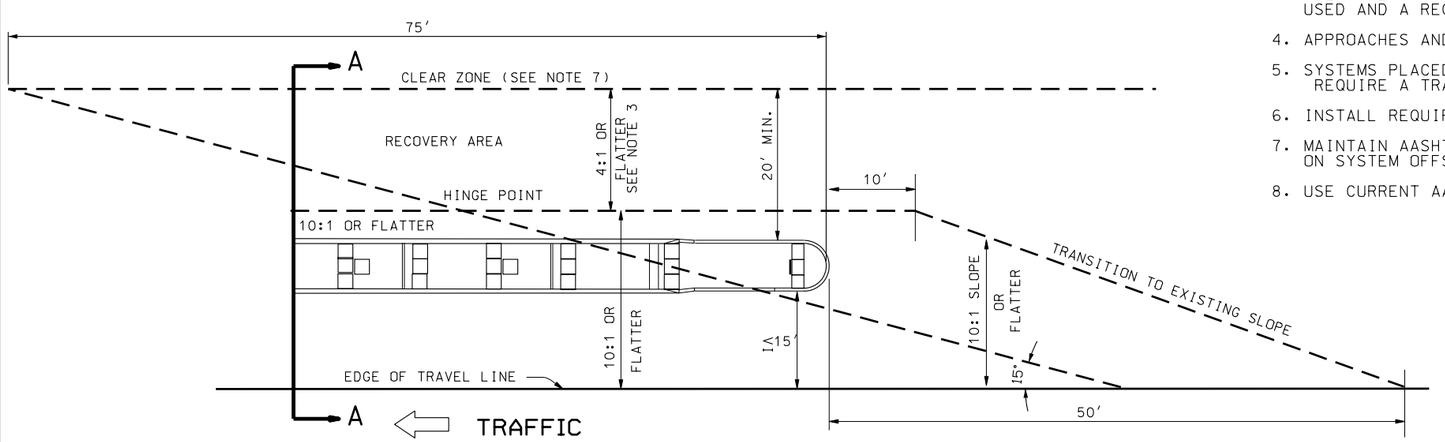

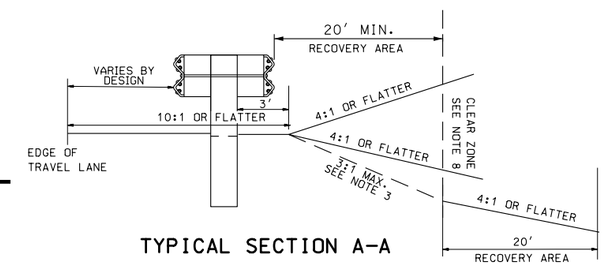

TYPICAL SECTION A-A

MEDIAN APPLICATION

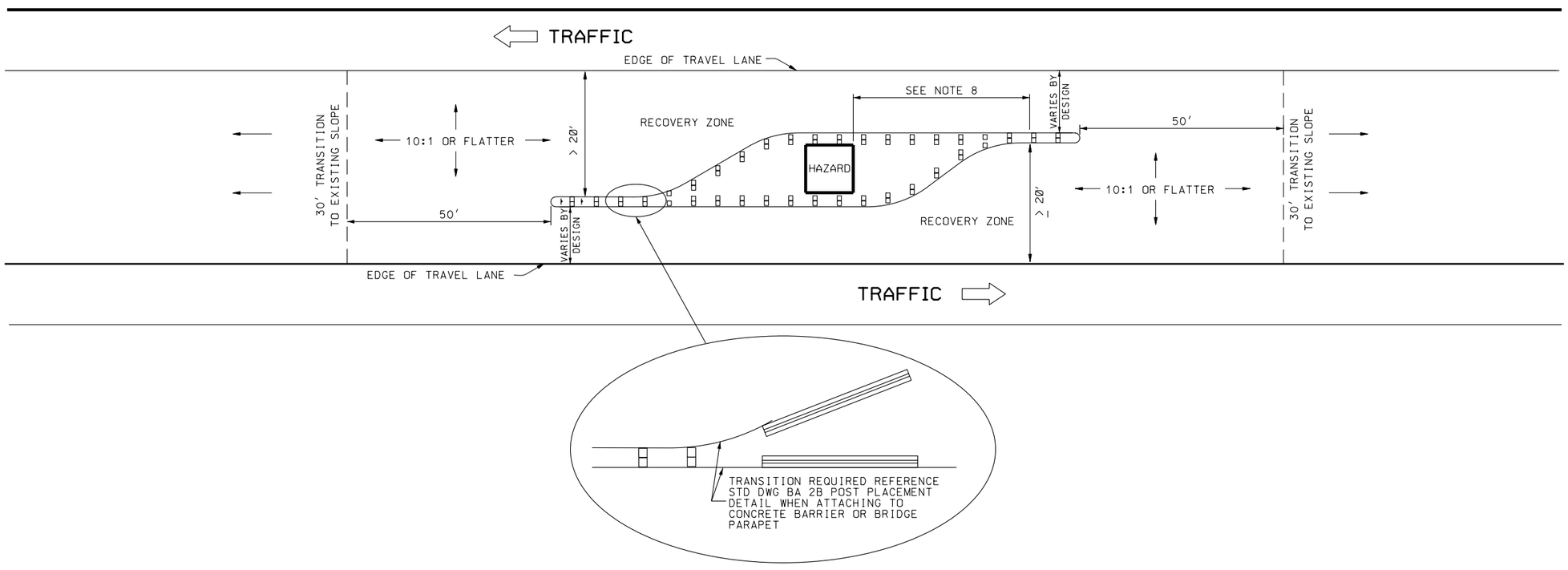

REVISIONS

NO.	DATE	APPR.	REMARKS

UTAH DEPARTMENT OF TRANSPORTATION
STANDARD DRAWINGS FOR ROAD AND BRIDGE CONSTRUCTION
SALT LAKE CITY, UTAH

RECOMMENDED FOR APPROVAL — JULY 03,2002 DATE

CHAIRMAN STANDARDS COMMITTEE APPROVED — JULY 03,2002 DATE

DEPUTY DIRECTOR

STANDARD DRAWING TITLE: GRADING & PLACEMENT DETAIL CRASH CUSHION TYPE C

STD DWG CC 5

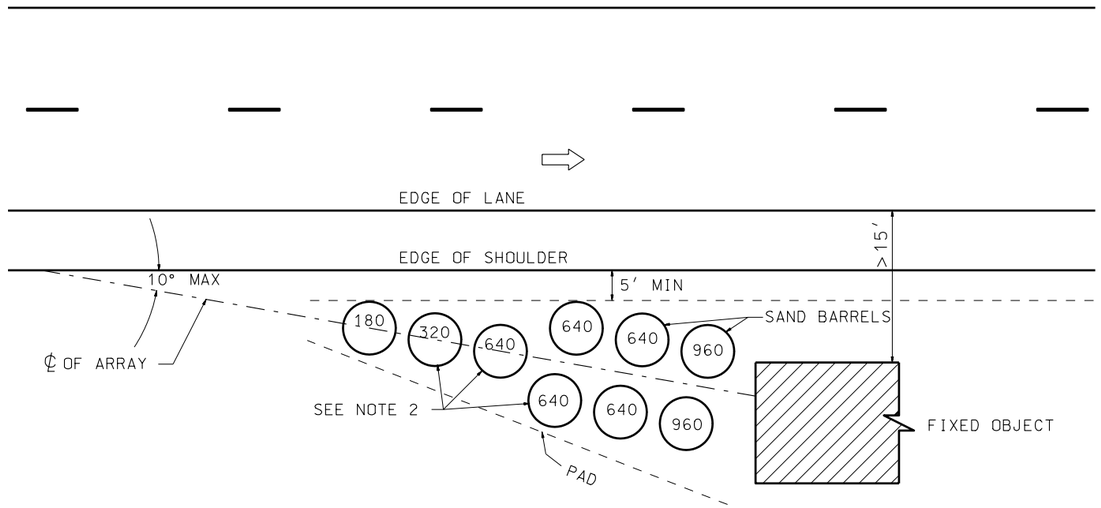

FOR ILLUSTRATION ONLY
ACTUAL DESIGNS WILL BE SITE SPECIFIC
SEE NOTE 3

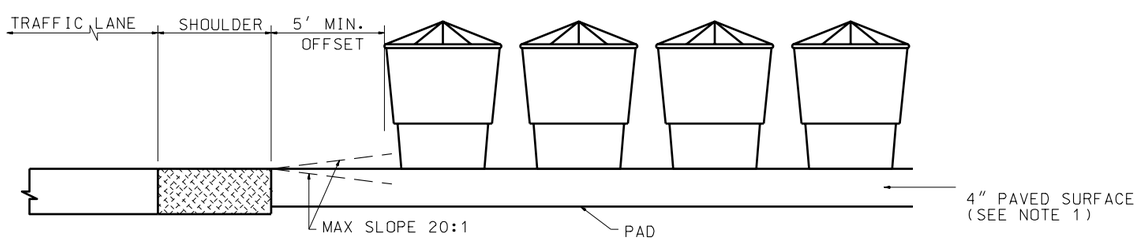

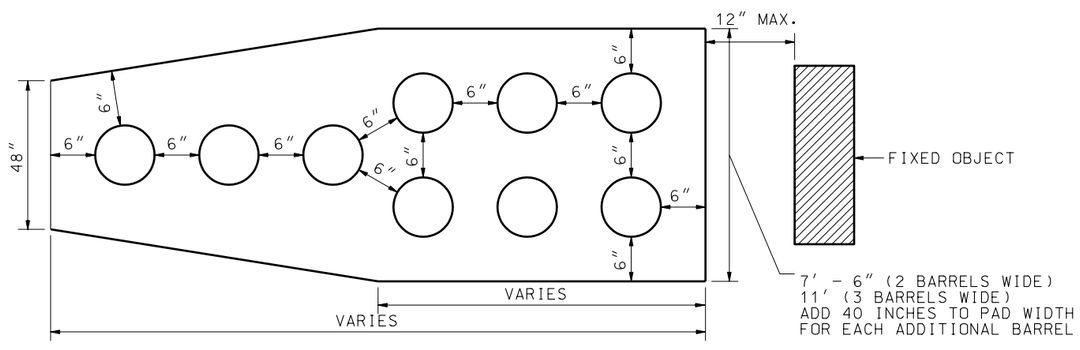

NOTES:

1. PAVE PAD WITH HOT MIX ASPHALT OR PORTLAND CEMENT CONCRETE.
2. MARK BARREL POSITION AND THE REQUIRED SAND WEIGHT FOR EACH BARREL POSITION ON THE PAVED SURFACE. USE FLUORESCENT ORANGE FOR THIS MARKING.
3. USE ENERGITE III SYSTEMS MANUAL TO GET REQUIRED DESIGN CRITERIA. MANUAL AVAILABLE FROM THE DIVISION OF TRAFFIC AND SAFETY.
4. INSTALL REQUIRED MARKING AS PER STD DWG CC 1

REVISIONS			
NO.	DATE	APPR.	REMARKS

UTAH DEPARTMENT OF TRANSPORTATION
STANDARD DRAWINGS FOR ROAD AND BRIDGE CONSTRUCTION
SALT LAKE CITY, UTAH

RECOMMENDED FOR APPROVAL — JULY 03,2002 DATE
CHAIRMAN STANDARDS COMMITTEE APPROVED — JULY 03,2002 DATE
DEPUTY DIRECTOR

CRASH CUSHION
TYPE E
SAND BARREL
DETAILS

STANDARD DRAWING TITLE

STD DWG
CC 6

CRASH CUSHION TYPE G

(SEE NOTE 1)

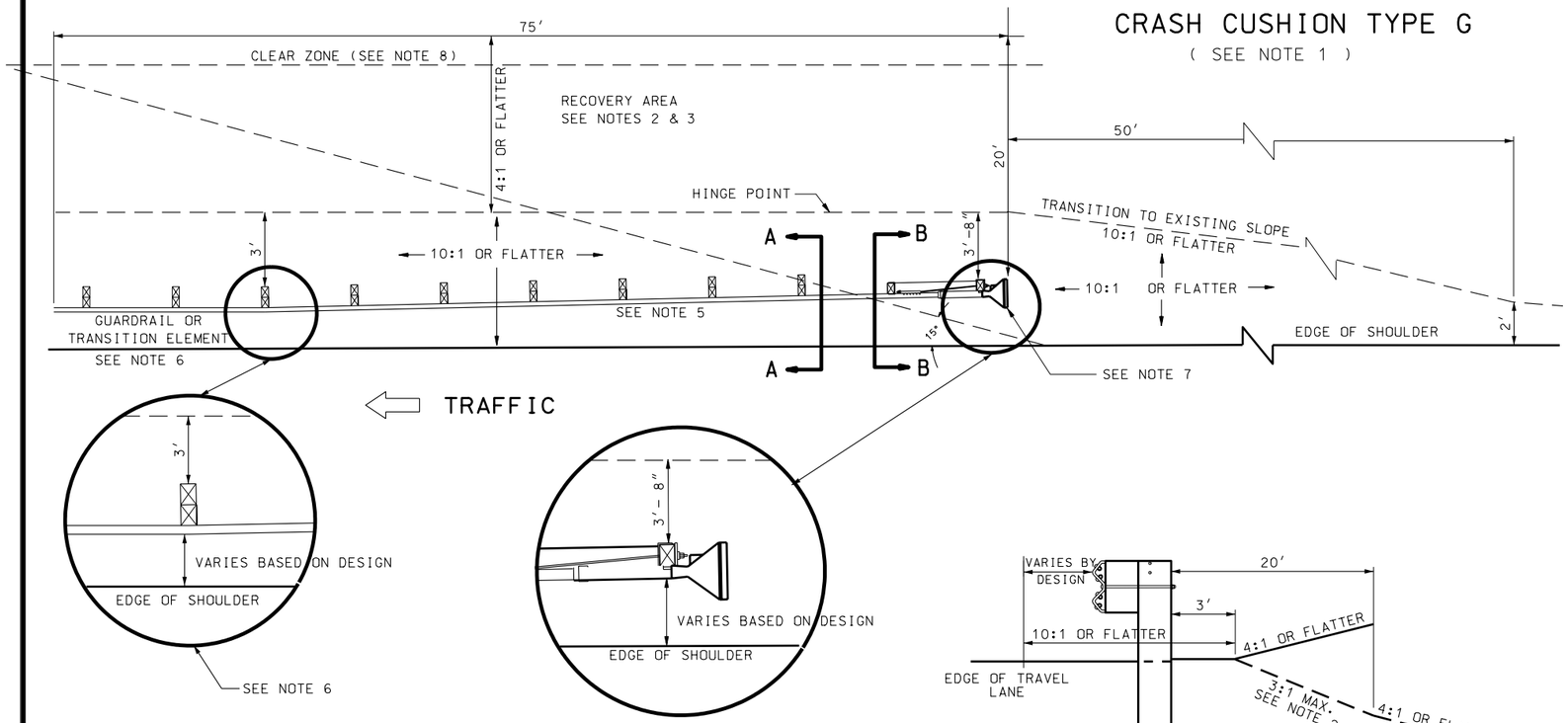

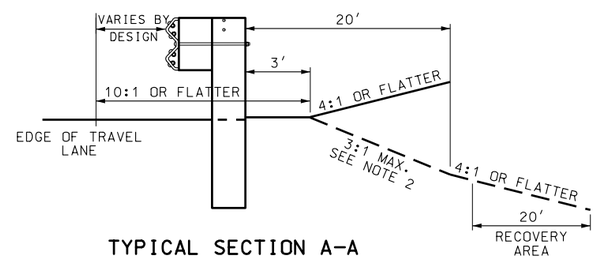

TYPICAL SECTION A-A
POSTS 3-9

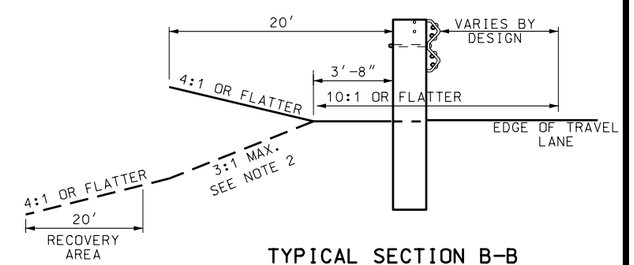

TYPICAL SECTION B-B
POSTS 1-2

NOTES FOR CRASH CUSHION TYPE G

1. THE ET-2000, MANUFACTURED BY SYRO INC., AND THE SKT-350, MANUFACTURED BY ROADWAY SYSTEMS INC. ARE APPROVED TYPE G SYSTEMS.
2. USE SYSTEMS ON TANGENT GUARDRAIL INSTALLATIONS. INSTALL CRASH CUSHION SYSTEM ON A 50:1 TAPER STARTING FROM THE END OF THE GUARDRAIL RUN OR TRANSITION ELEMENT TO THE FRONT OF THE SYSTEM.
3. USE A 4:1 OR FLATTER FILL SLOPE IN RECOVERY AREA. IF IMPRACTICAL, USE A MAXIMUM 3:1 FILL SLOPE AND A RECOVERY AREA ESTABLISHED AT THE TOE OF 3:1 FILL SLOPE. WHEN USED WITH A CUT SLOPE, A 4:1 OR FLATTER CUT IS REQUIRED IN THE RECOVERY AREA.
4. CLEAR THE RECOVERY AND APPROACH AREAS OF ANY OBJECTS.
5. COMPLETE ALL GRADING PRIOR TO SYSTEM INSTALLATION.
6. USE TRANSITION ELEMENT AS PER STD DWG BA 2B, POST PLACEMENT DETAIL WHEN ATTACHING SYSTEM TO CONCRETE BARRIER OR BRIDGE PARAPET.
7. INSTALL REQUIRED MARKING AS PER STD DWG CC 1.
8. MAINTAIN AASHTO CLEAR ZONE FOR SPEEDS GREATER THAN 40 MPH. DEPENDING ON SYSTEM OFFSET, CLEAR ZONE MAY EXTEND OUTSIDE THE RECOVERY AREA.

CRASH CUSHION TYPE F

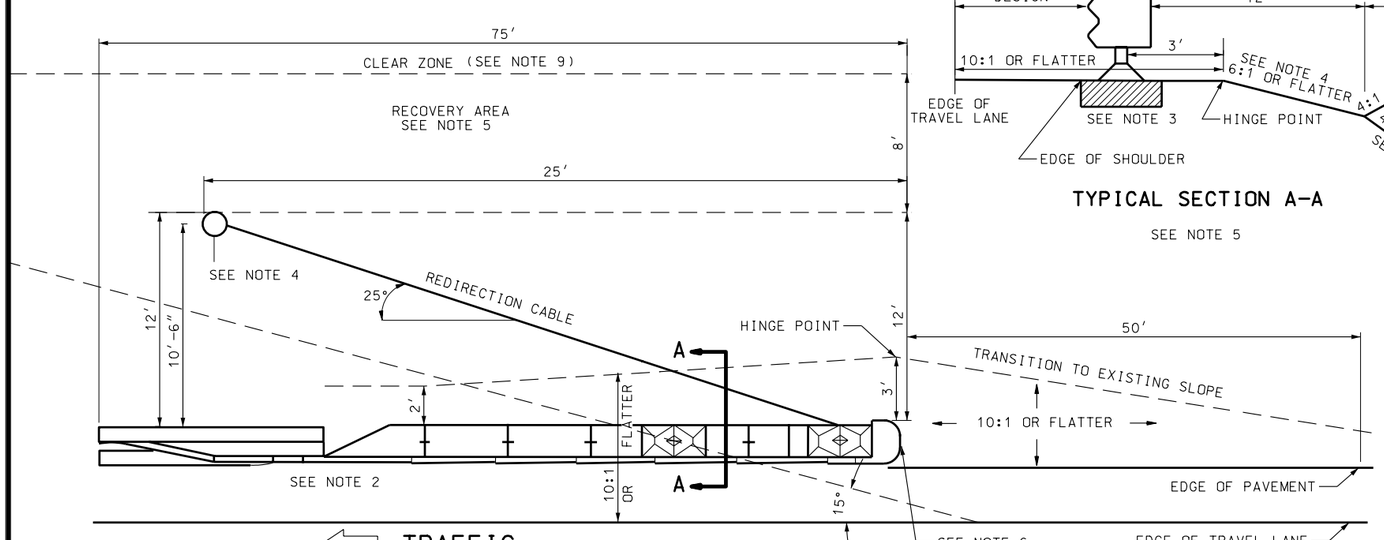

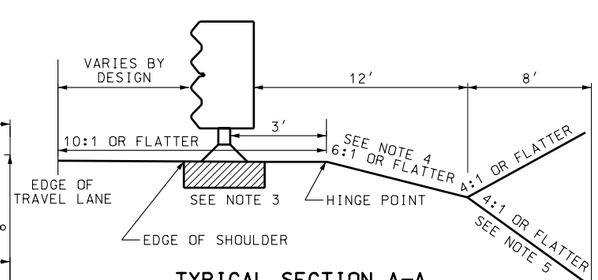

TYPICAL SECTION A-A

SEE NOTE 5

NOTES FOR CRASH CUSHION TYPE F

1. THE QUADTREND-350 IS MANUFACTURED BY ENERGY ABSORPTION SYSTEMS. USE MANUFACTURER'S AND UDOT'S REQUIREMENTS WHEN INSTALLING SYSTEM.
2. USE THE QUADTREND-350 WHEN A DIRECT ATTACHMENT TO A CONCRETE BARRIER OR BRIDGE PARAPET IS REQUIRED AND THERE IS LESS THAN 125 FEET OF LONGITUDINAL SPACE IN FRONT OF THE HAZARD.
3. INSTALL CONCRETE PAD AS PER MANUFACTURER'S REQUIREMENTS.
4. PLACE CABLE ANCHOR FOUNDATION IN SUCH A MANNER THAT THE REDIRECTING CABLE LAYS 6:1 OR FLATTER ON TOP OF THE GROUND, AND THE FOUNDATION WITH THE CABLE ANCHOR BRACKET, WHEN ATTACHED TO FOUNDATION, DOES NOT EXCEED 4 INCHES ABOVE GROUND LEVEL. DO NOT BURY THE REDIRECTION CABLE. REFERENCE STD DWG SN 6, BREAKAWAY POST STUB DETAIL.
5. USE A 4:1 OR FLATTER SLOPE IN RECOVERY AREA. WHEN USED WITH A CUT SLOPE A 6:1 OR FLATTER FILL AREA 12 FT. X 25 FT. IS REQUIRED PRIOR TO THE CUT SLOPE. INCLUDE THIS AREA AS PART OF THE RECOVERY AREA.
6. CLEAR THE RECOVERY AND APPROACH AREAS OF ANY FIXED OBJECTS.
7. COMPLETE ALL GRADING REQUIREMENTS PRIOR TO SYSTEM INSTALLATION.
8. INSTALL REQUIRED MARKING AS PER STD DWG CC 1.
9. MAINTAIN AASHTO CLEAR ZONE FOR SPEEDS GREATER THAN 40 MPH. DEPENDING ON SYSTEM OFFSET, CLEAR ZONE MAY EXTEND OUTSIDE OF THE RECOVERY AREA.

NO.	DATE	APPR.	REMARKS

REVISIONS

UTAH DEPARTMENT OF TRANSPORTATION
STANDARD DRAWINGS FOR ROAD AND BRIDGE CONSTRUCTION
SALT LAKE CITY, UTAH

RECOMMENDED FOR APPROVAL — JULY 03,2002 DATE
CHAIRMAN STANDARDS COMMITTEE APPROVED — JULY 03,2002 DATE
DEPUTY DIRECTOR

GRADING & INSTALLATION DETAILS CRASH CUSHIONS TYPE F, TYPE G

STANDARD DRAWING TITLE

STD DWG
CC 7

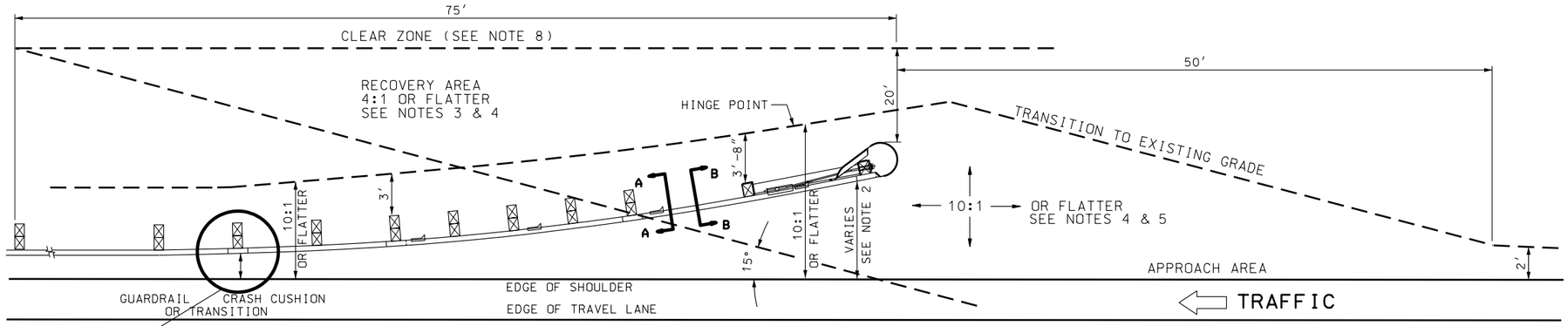

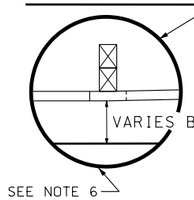

SRT-350
(12.6, 8 POST)

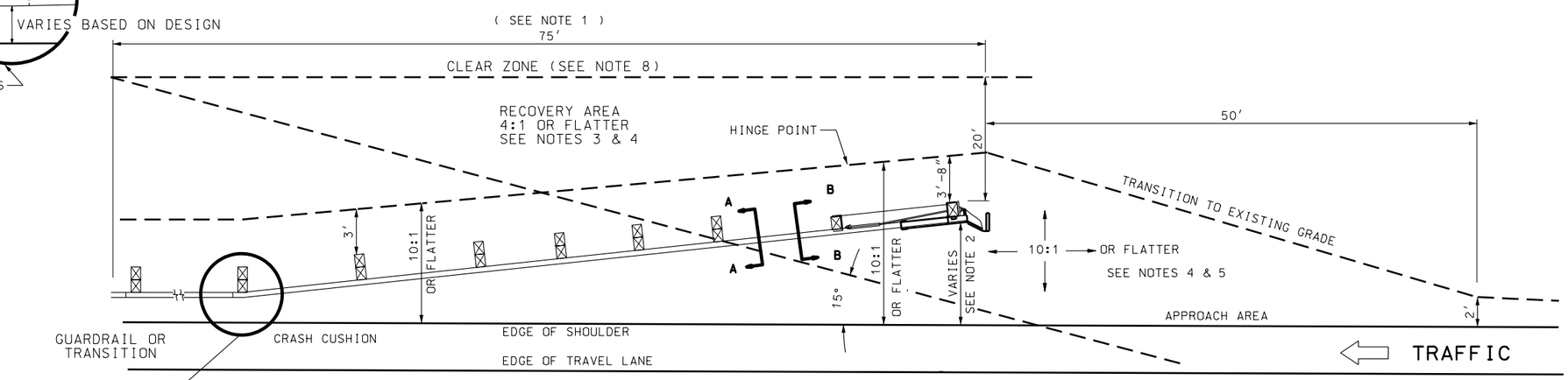

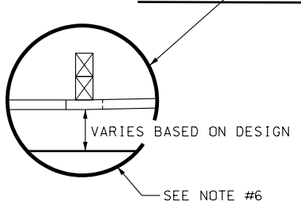

FLEAT - 350
(SEE NOTE 1)

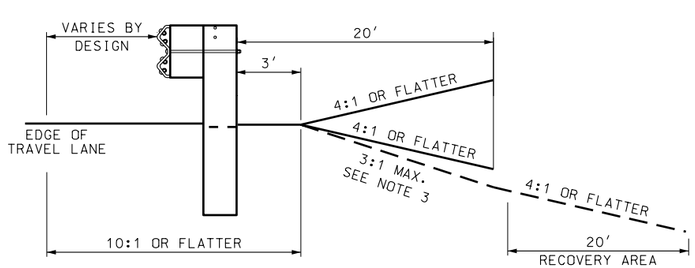

TYPICAL SECTION A-A
POST 3-8

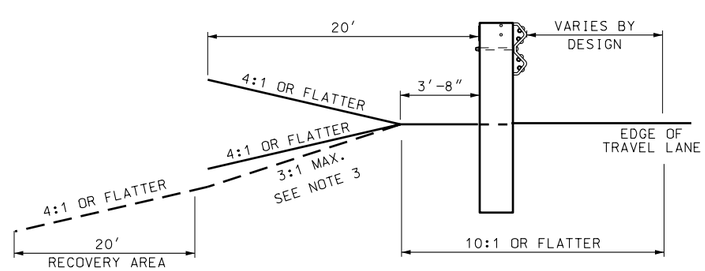

TYPICAL SECTION B-B
POST 1-2

NOTES FOR END SECTION TYPE "H"

1. THE SRT-350 (12.6, 8 POST SYSTEM), MANUFACTURED BY SYRO INC. AND THE FLEAT-350, MANUFACTURED BY ROADWAY SYSTEMS INC. ARE APPROVED, CRASH CUSHION TYPE H SYSTEMS.
2. THE SRT-350 AND FLEAT-350 ARE VARIABLE FLARED SYSTEMS. THE SRT-350 INCORPORATES A PARABOLIC TYPE FLARE, AND THE FLEAT-350 USES A STRAIGHT LINE FLARE. USE SYSTEMS ON TANGENT OR FLARED GUARDRAIL INSTALLATIONS. SEE MANUFACTURER'S SPECIFICATION FOR CORRECT POST OFFSET REQUIREMENTS.
3. USE A 4:1 OR FLATTER FILL SLOPE IN RECOVERY AREA. IF IMPRACTICAL, USE A MAXIMUM 3:1 FILL SLOPE AND A RECOVERY AREA ESTABLISHED AT THE TOE OF 3:1 FILL SLOPE. WHEN USED WITH A CUT SLOPE A 4:1 OR FLATTER CUT IS REQUIRED IN THE RECOVERY AREA.
4. CLEAR THE RECOVERY AND APPROACH AREAS OF ANY FIXED OBJECTS.
5. COMPLETE ALL GRADING REQUIREMENTS PRIOR TO SYSTEM INSTALLATION.
6. USE TRANSITION ELEMENT AS PER STD DWG BA 2B, POST PLACEMENT DETAIL WHEN ATTACHING SYSTEM TO CONCRETE BARRIER OR BRIDGE PARAPET.
7. INSTALL REQUIRED MARKING AS PER STD DWG CC 1.
8. MAINTAIN AASHTO CLEAR ZONE FOR SPEEDS GREATER THAN 40 MPH. DEPENDING ON SYSTEM OFFSET, CLEAR ZONE MAY EXTEND OUTSIDE OF THE RECOVERY AREA.

NO.	DATE	APPR.	REMARKS

REVISIONS

UTAH DEPARTMENT OF TRANSPORTATION
STANDARD DRAWINGS FOR ROAD AND BRIDGE CONSTRUCTION
SALT LAKE CITY, UTAH

RECOMMENDED FOR APPROVAL — JULY 03,2002 DATE

CHAIRMAN STANDARDS COMMITTEE APPROVED — JULY 03,2002 DATE

DEPUTY DIRECTOR

GRADING & INSTALLATION DETAIL CRASH CUSHION TYPE H

STANDARD DRAWING TITLE

STD DWG
CC 8

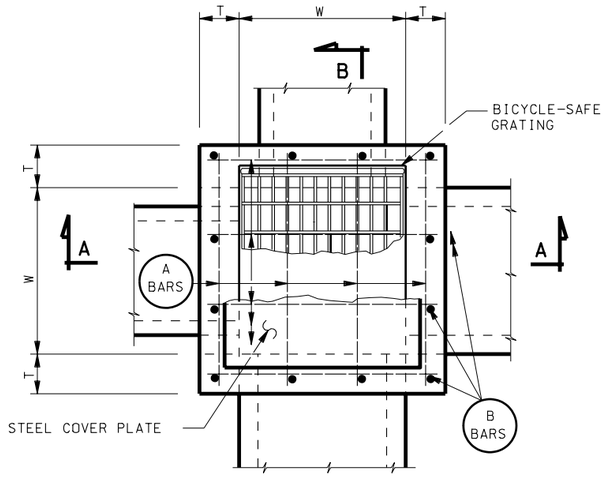

PLAN

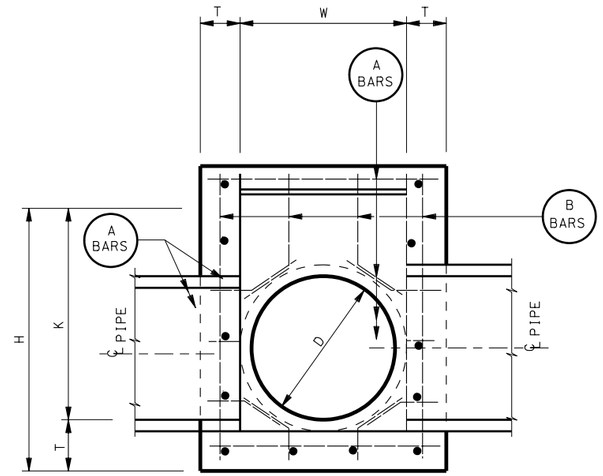

SECTION A-A

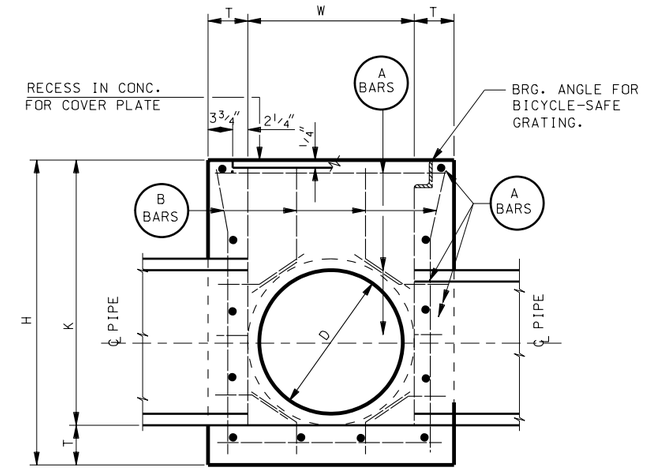

SECTION B-B

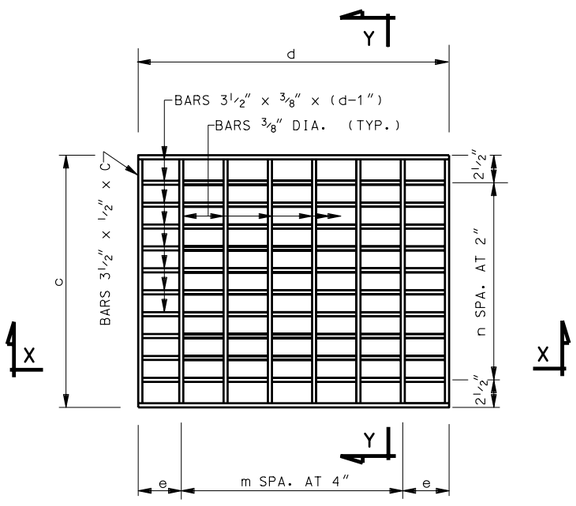

PLAN (GRATING)

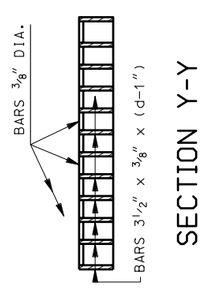

SECTION Y-Y

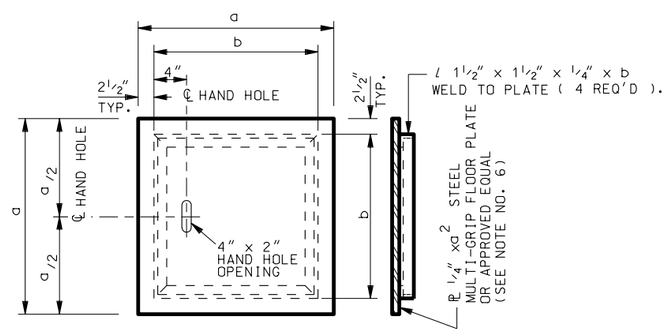

STEEL COVER PLATE DETAILS

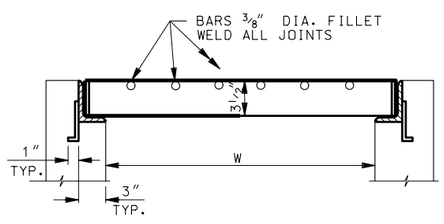

SECTION X-X

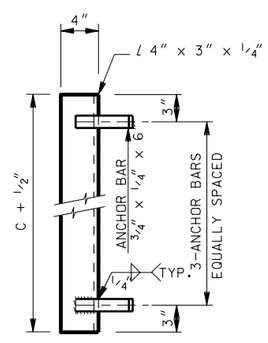

BICYCLE-SAFE GRATING

GENERAL NOTES FOR DB 1A TO DB 3C

1. USE COATED DEFORMED BILLET STEEL BARS CONFORMING TO AASHTO M 284 OR M 111 AND M 31 GRADE 60, RESPECTIVELY.
2. USE STRUCTURAL STEEL CONFORMING TO AASHTO M 270 GRADE 36 EXCEPT WHERE NOTED OTHERWISE.
3. HOT-DIP GALVANIZE THE GRATING AND FRAME AFTER FABRICATION IN ACCORDANCE WITH AASHTO M111.
4. TYPE II CEMENT (LOW ALKALI), STRUCTURAL CONCRETE REQUIRED.
5. PIPES AND BOX TO BE ARRANGED TO SUIT CONDITIONS. CUT AND BEND BARS WHERE NECESSARY TO CLEAR PIPE. ALL BARS TO BE #5 AT 12" PLUS OR MINUS.
6. COVER PLATE ALTERNATE FOR GRATING. COVER PLATE IS NOT DESIGNED FOR WHEEL LOAD. (SEE STD DWG CB 4 FOR SOLID COVER FOR HS 20-44 LOADING).
7. DEDUCT CONCRETE DISPLACED BY PIPE(S) FROM THOSE CONCRETE QUANTITIES GIVEN IN SCHEDULE NO. 1.

DESIGN DATA

HS 20-44 OR INTERSTATE ALTERNATE LOADING IN ACCORDANCE WITH CURRENT AASHTO AND INTERIM SPECIFICATIONS.

LIVE LOAD: HS 20-44
fc = 1,400 psi
fs = 24,000 psi (REINFORCING STEEL)
fs = 20,000 psi (STRUCTURAL STEEL)
n = 8

DIMENSIONS & QUANTITIES

(SEE SCHEDULES ON STD DWG DB 1D)

NO.	DATE	APPR.	REMARKS

REVISIONS

UTAH DEPARTMENT OF TRANSPORTATION
STANDARD DRAWINGS FOR ROAD AND BRIDGE CONSTRUCTION
SALT LAKE CITY, UTAH

RECOMMENDED FOR APPROVAL — JULY 03,2002 DATE
CHAIRMAN STANDARDS COMMITTEE APPROVED — JULY 03,2002 DATE
DEPUTY DIRECTOR

STANDARD DIVERSION BOX/COVER PLATE/ GRATING FOR 18" DIA. OR 24" DIA.PIPE.

STANDARD DRAWING TITLE

STD DWG
DB 1A

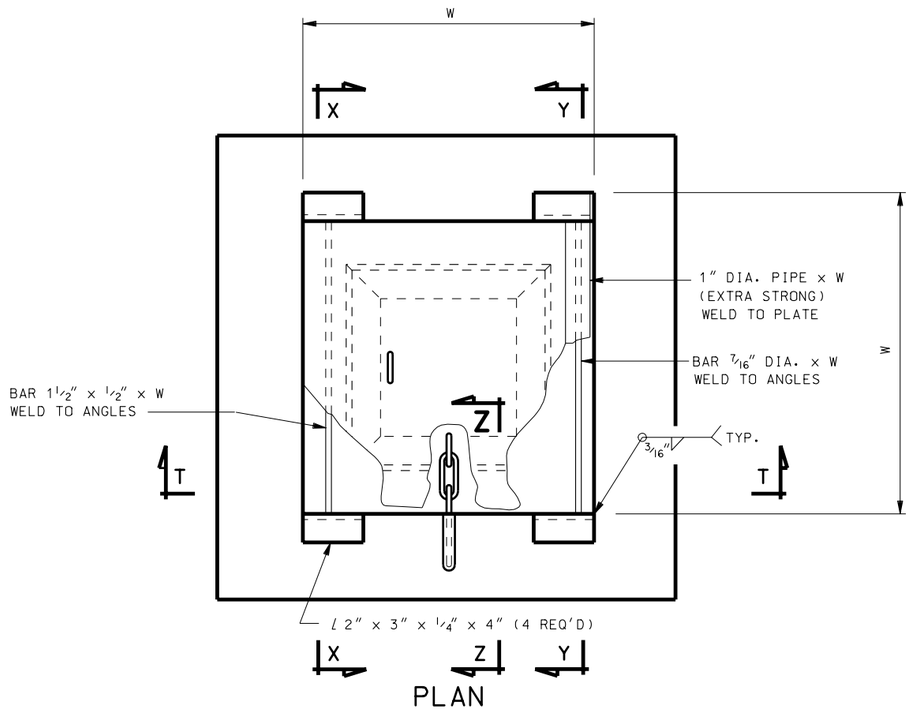

PLAN

DETAILS OF SHEET COVER PLATE
(SECTION Z-Z IS ON STD DWG DB 1C)

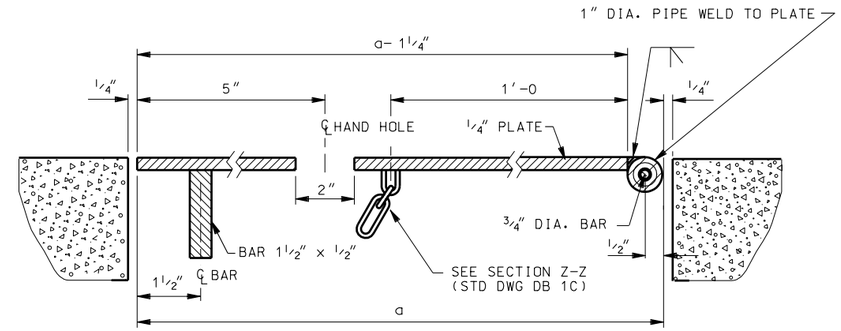

SECTION T-T

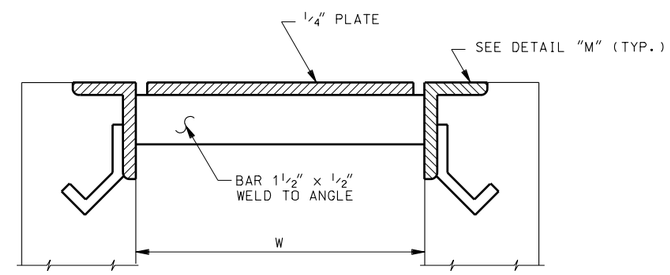

SECTION X-X

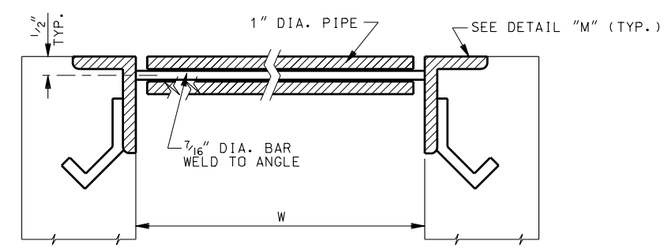

SECTION Y-Y

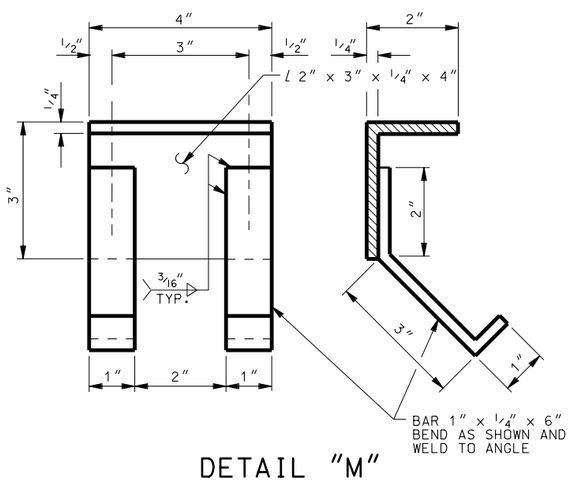

DETAIL "M"
HINGED LID DETAILS

DIMENSION & QUANTITIES
(SEE SCHEDULE ON STD DWG DB 1D)

REVISIONS

NO.	DATE	APPR.	REMARKS

UTAH DEPARTMENT OF TRANSPORTATION
STANDARD DRAWINGS FOR ROAD AND BRIDGE CONSTRUCTION
SALT LAKE CITY, UTAH

RECOMMENDED FOR APPROVAL — JULY 03,2002 DATE

CHAIRMAN STANDARDS COMMITTEE APPROVED — JULY 03,2002 DATE

DEPUTY DIRECTOR

STANDARD DIVERSION
BOX HINGED LID
DETAIL FOR
18" DIA. OR 24" DIA.PIPE

STANDARD DRAWING TITLE

STD DWG
DB 1B

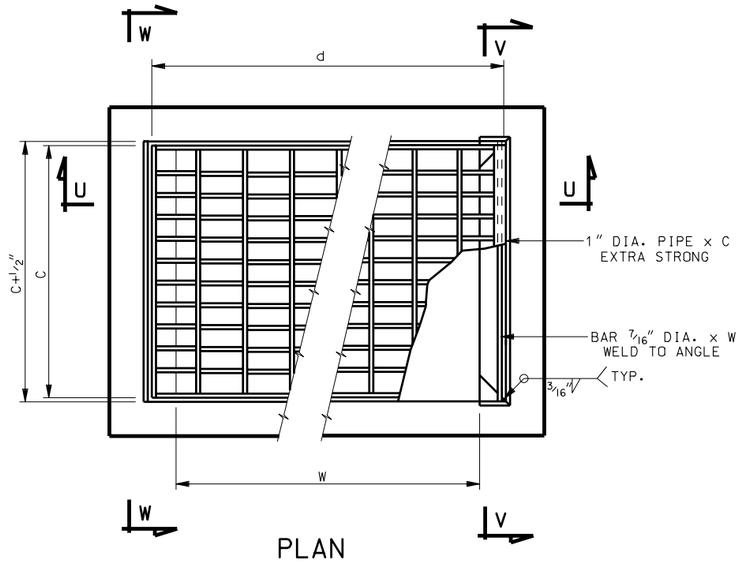

PLAN

DETAIL OF BICYCLE-SAFE GRATING

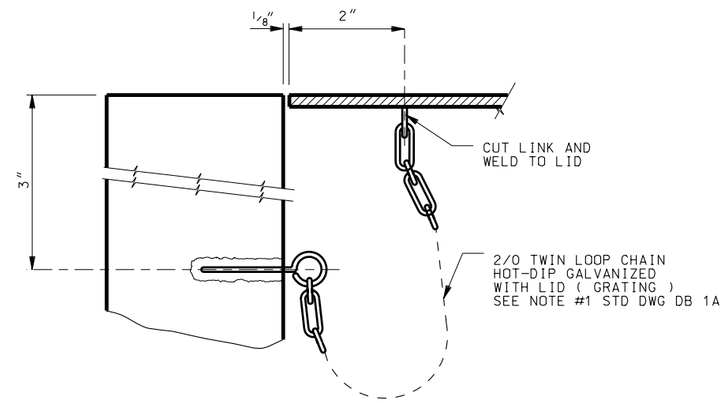

SECTION Z-Z

NOTE #1 STD DWG DB 1A
LENGTH OF CHAIN:
FOR LID: L = 1'-9
FOR GRATING: L = 2'-6

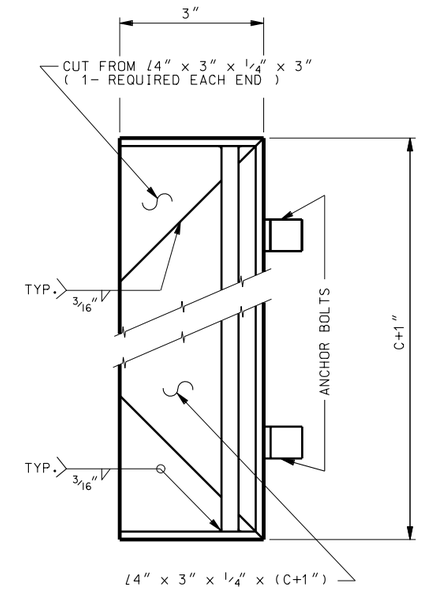

SECTION S-S

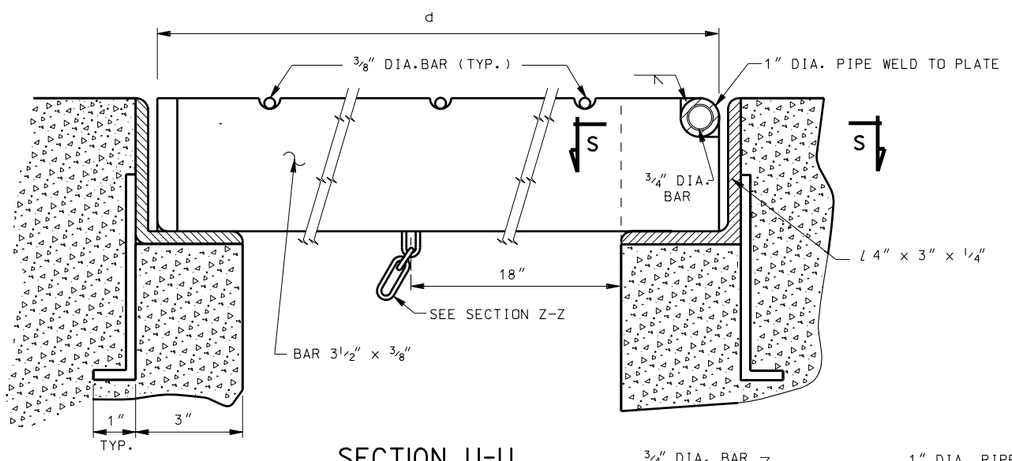

SECTION U-U

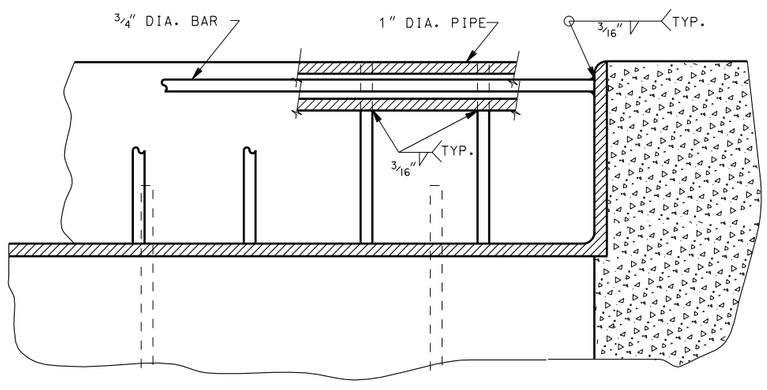

SECTION V-V

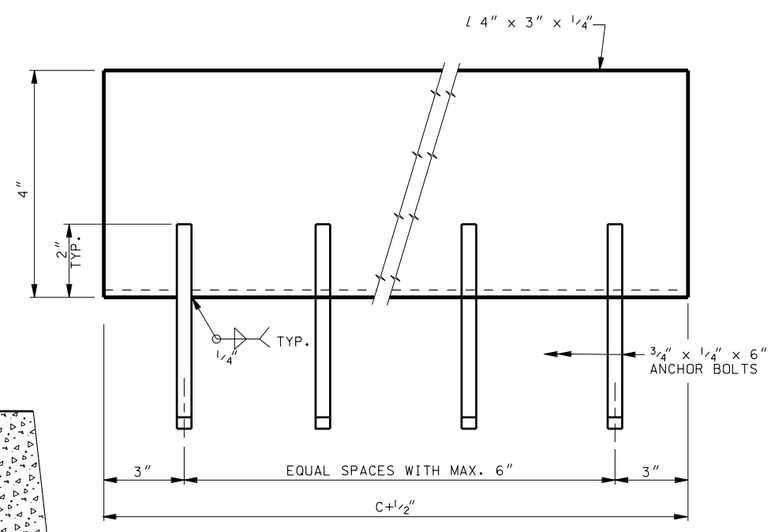

SECTION W-W

DIMENSIONS & QUANTITIES
(SEE SCHEDULES ON STD DWG DB 1D)

NO.	DATE	APPR.	REMARKS

REVISIONS

UTAH DEPARTMENT OF TRANSPORTATION
STANDARD DRAWINGS FOR ROAD AND BRIDGE CONSTRUCTION
SALT LAKE CITY, UTAH

RECOMMENDED FOR APPROVAL — JULY 03,2002 DATE

CHAIRMAN STANDARDS COMMITTEE APPROVED — JULY 03,2002 DATE

DEPUTY DIRECTOR

STANDARD DRAWING TITLE

STANDARD DIVERSION BOX BICYCLE-SAFE GRATING DETAILS 18" DIA OR 24" DIA.PIPE

STD DWG
DB 1C

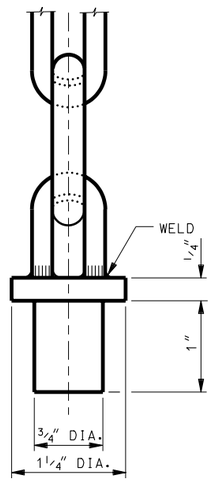

SET BOLT DETAIL

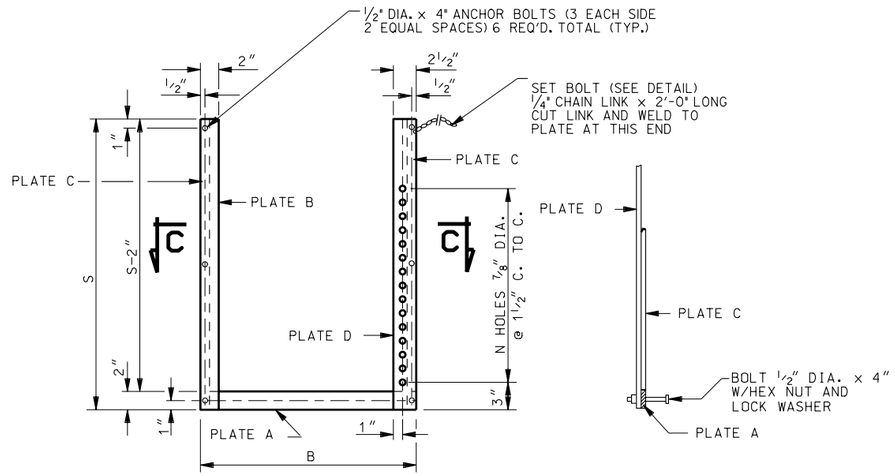

FRAME DETAILS

SCHEDULE NO. 1

LINE	DIMENSIONS H	K	W	T	X	REINFORCING STEEL A-BARS LENGTH	A-BARS NO.	B-BARS LENGTH	B-BARS NO.	QUANTITIES REINF. STEEL LB.	CONC. CU. YD.	STRUCTURAL STEEL GRATING LBS.	COVER PLATE LBS.	FRAME LBS.	GATE LBS.
1	2'-6	2'-0	2'-0	6"	0	2'-8	12	2'-1	12	59	.525	177	80	18	26
2	3'-0	2'-6	↑	↑	6"	↑	16	2'-7	↑	77	.617	↑	↑	↑	↑
3	3'-6	3'-0			1'-0		16	3'-1		83	.710				
4	4'-0	3'-6			1'-6		20	3'-7		100	.802				
5	4'-6	4'-0			2'-0		20	4'-1		107	.895				
6	5'-0	4'-6			2'-6		24	4'-7		124	.988				
7	5'-6	5'-0			3'-0		24	5'-1		130	1.080				
8	6'-0	5'-6			3'-6		28	5'-7		148	1.173				
9	6'-6	6'-0	↓	↓	4'-0	↓	28	6'-1	↓	154	1.265	↓	↓	↓	↓
10	7'-0	6'-6	2'-0	6"	4'-6	3'-2	32	6'-7	12	171	1.358	177	80	18	26
11	3'-0	2'-6	2'-6	6"	0	3'-2	16	2'-7	12	85	.770	254	114	21	41
12	3'-6	3'-0	↑	↑	6"	↑	16	3'-1	↑	91	.878	↑	↑	↑	↑
13	4'-0	3'-6			1'-0		20	3'-7		111	.989				
14	4'-6	4'-0			1'-6		20	4'-1		117	1.100				
15	5'-0	4'-6			2'-0		24	4'-7		137	1.211				
16	5'-6	5'-0			2'-6		24	5'-1		143	1.323				
17	6'-0	5'-6			3'-0		28	5'-7		162	1.434				
18	6'-6	6'-0			3'-6		28	6'-1		169	1.545				
19	7'-0	6'-6	↓	↓	4'-0	↓	32	6'-7	↓	188	1.656	↓	↓	↓	↓
20	7'-6	7'-0	2'-6	6"	4'-6	3'-2	32	7'-1	12	194	1.767	254	114	21	41

SCHEDULE NO. 2

PIPE SIZE D	COVER PLATE a	b	BICYCLE-SAFE GRATING c	d	e	m	n	FRAME AND GATE B	S	N	1-PL. A	1-PL. B	2-PL. C	1-PL. D	GATE
18"	2'-4	1'-11	1'-11	2'-4 1/2	4 1/4"	5	9	1'-11	2'-0	12	1/4"x2"x1'-11	1/4"x2"x2'-0	1/4"x1"x1'-10	1/4"x2 1/2"x2'-0	3/16"x20 1/2"x1'-10
24"	2'-10	2'-5	2'-5	2'-10 1/2	5 1/4"	6	12	2'-5	2'-6	15	1/4"x2"x2'-5	1/4"x2"x2'-6	1/4"x1"x2'-4	1/4"x2 1/2"x2'-6	3/16"x26 1/2"x2'-4

SEE NOTE 4

SEE NOTE 5

D	a
18"	1'-11 1/2
24"	2'-5 1/2

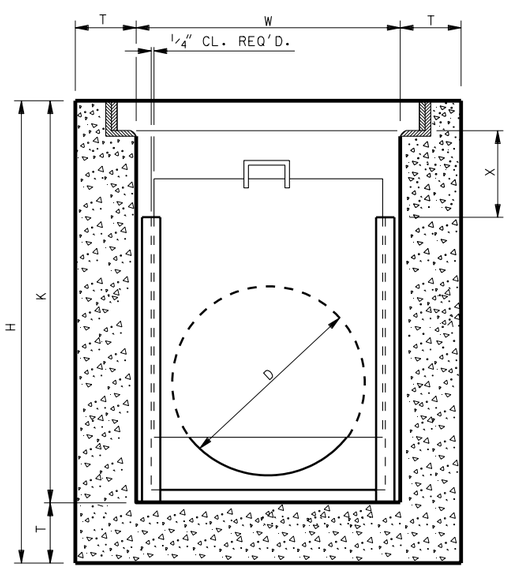

FRAME AND GATE INSTALLATION DETAIL

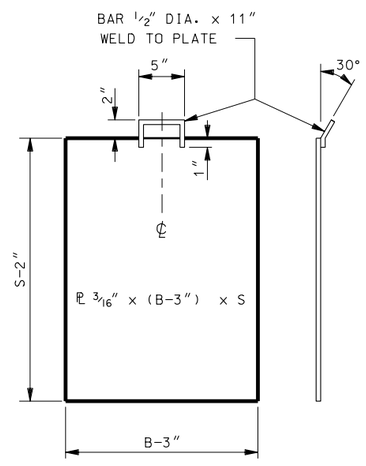

GATE

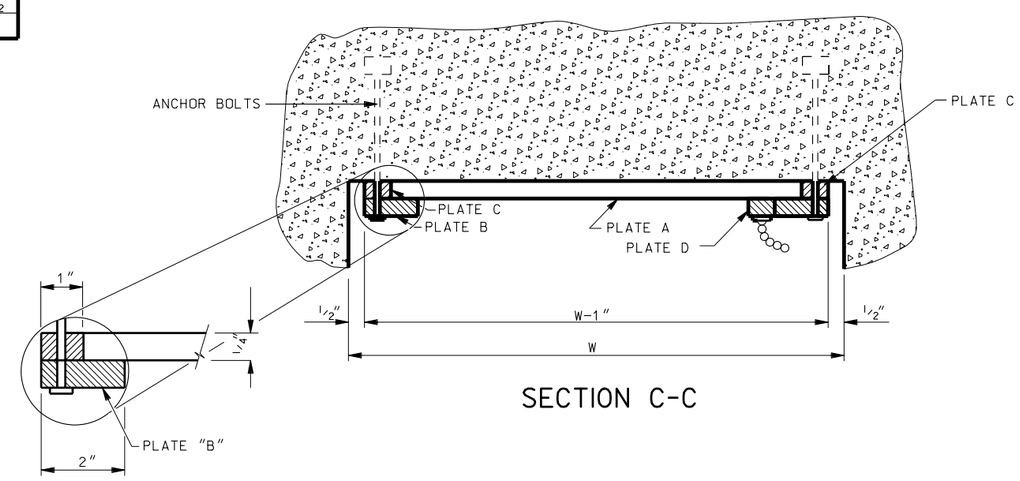

SECTION C-C

NOTES:

1. CALCULATIONS OF CONCRETE QUANTITIES ARE FOR BOXES WITH BICYCLE-SAFE GRATING AND NO OPENINGS FOR PIPE(S).
2. FOR SOLID COVER ADD .011 CU. YD. OF CONCRETE IN LINES 1 THRU 10 INCLUSIVE AND .014 CU. YD. OF CONCRETE IN LINES 11 THRU 20 INCLUSIVE AND DEDUCT .053 CU. YD. OF CONCRETE FOR EACH 18" DIA. PIPE IN LINES 1 THRU 10 INCLUSIVE AND .091 CU. YD. OF CONCRETE FOR EACH 24" DIA. PIPE IN LINES 11 THRU 20 INCLUSIVE.
3. IF DIMENSION X IS LESS THAN INSIDE PIPE DIAMETER D, THE GATE(S) CAN ONLY BE PARTIALLY OPENED TO ALLOW THE GRATING OR COVER PLATE TO BE REPLACED.
4. SEE STD DWG CB 4 FOR SOLID COVER PLATE DETAILS.
5. SEE STD DWG DB 1B FOR HINGED LID DETAILS.

REVISIONS

NO.	DATE	APPR.	REMARKS

UTAH DEPARTMENT OF TRANSPORTATION
STANDARD DRAWINGS FOR ROAD AND BRIDGE CONSTRUCTION
SALT LAKE CITY, UTAH

RECOMMENDED FOR APPROVAL — JULY 03,2002 DATE

CHAIRMAN STANDARDS COMMITTEE APPROVED — JULY 03,2002 DATE

DEPUTY DIRECTOR

STANDARD DIVERSION BOX THREE GATE BOX SECTIONS FOR 18" DIA. OR 24" DIA. PIPE

STANDARD DRAWING TITLE

STD DWG
DB 1D

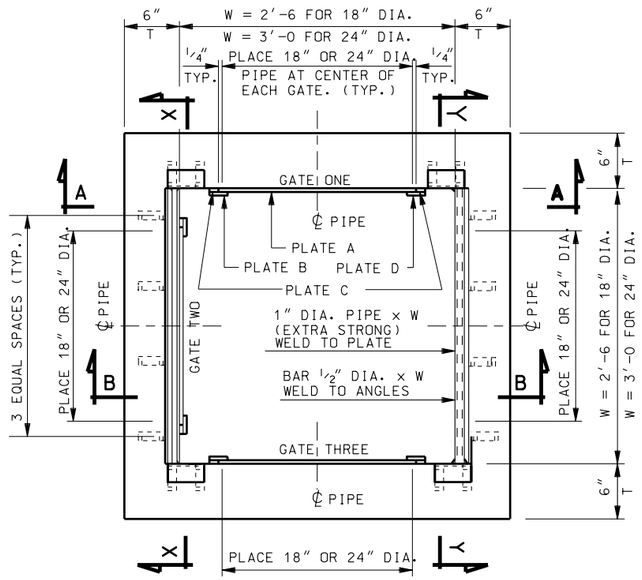

3 GATE PLAN

(SECTION X-X Y-Y & B-B ARE ON STD DWG DB 1F)

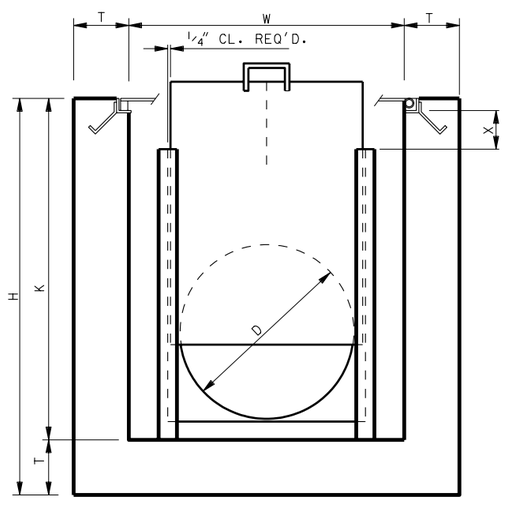

SECTION A-A

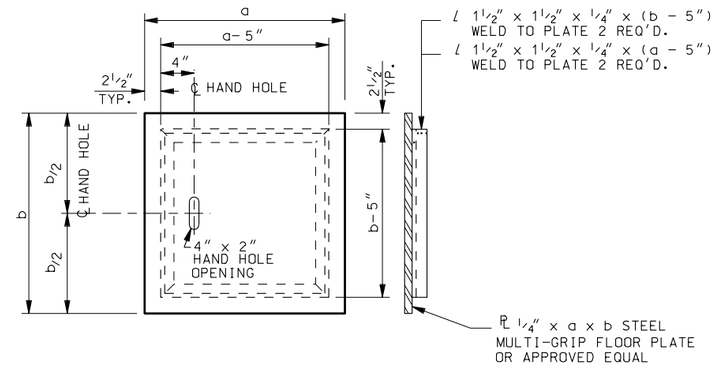

STEEL COVER PLATE DETAILS

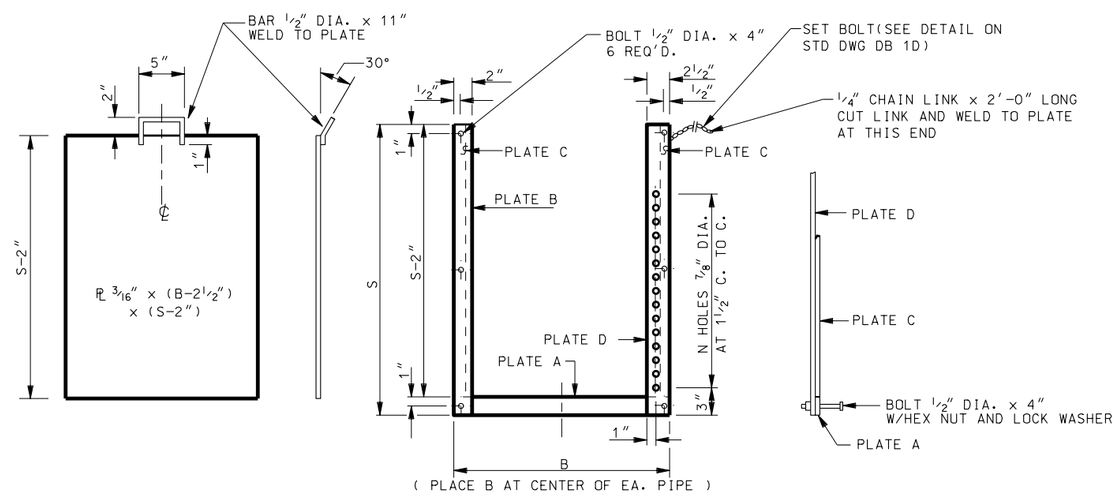

FRAME AND GATE INSTALLATION DETAIL DIMENSIONS AND QUANTITIES

SEE SCHEDULES ON STD DWG DB 1F

REVISIONS

NO.	DATE	APPR.	REMARKS

UTAH DEPARTMENT OF TRANSPORTATION
STANDARD DRAWINGS FOR ROAD AND BRIDGE CONSTRUCTION
SALT LAKE CITY, UTAH

RECOMMENDED FOR APPROVAL — JULY 03,2002 DATE

CHAIRMAN STANDARDS COMMITTEE APPROVED — JULY 03,2002 DATE

DEPUTY DIRECTOR

STANDARD DRAWING TITLE

STANDARD DIVERSION BOX THREE GATE BOX SECTIONS FOR 18" DIA. OR 24" DIA. PIPE

STD DWG
DB 1E

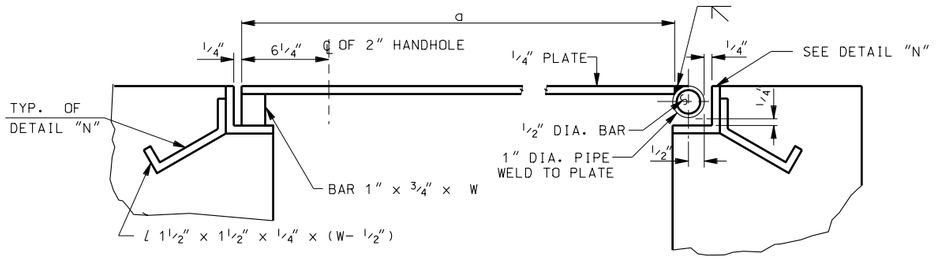

SECTION B-B

(SECTION IS TAKEN FROM STD DWG DB 1E)

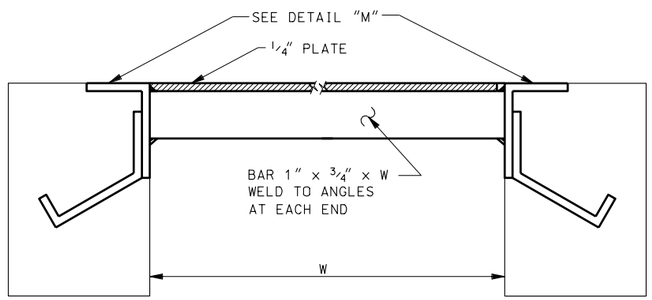

SECTION X-X

(SECTION IS TAKEN FROM STD DWG DB 1E)

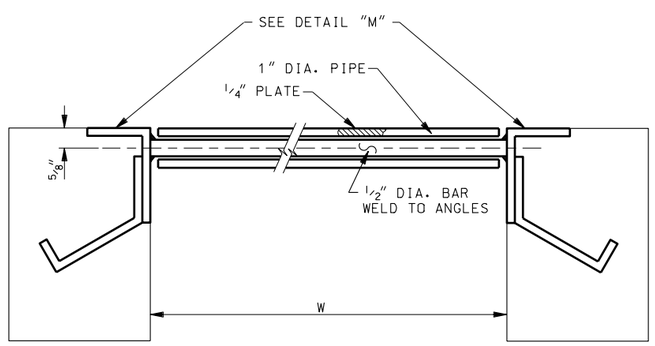

SECTION Y-Y

(SECTION IS TAKEN FROM STD DWG DB 1E)

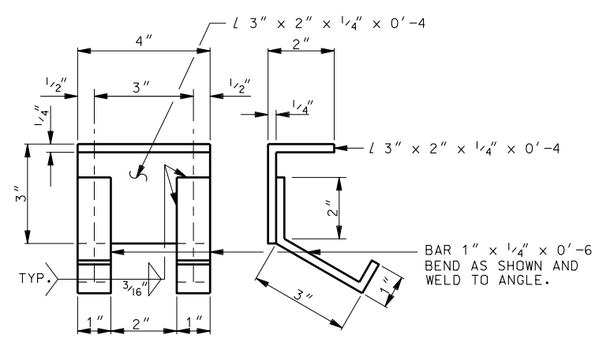

DETAIL "M"

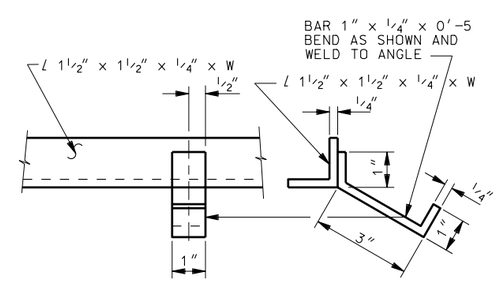

DETAIL "N"

SCHEDULE NO. 1

LINE	DIMENSIONS H	K	W	T	X	REINFORCING STEEL A-BARS LENGTH	A-BARS NO.	B-BARS LENGTH	B-BARS NO.	QUANTITIES REINF. STEEL LB.	CONC. CU. YD.	STRUCTURAL STEEL PIPES, BARS & ANGLES lbs.	COVER PLATE lbs.	FRAME* lbs.	GATE lbs. EA.
1	2'-6	2'-0	2'-6	6"	0	3'-2	12	2'-1	12	66	0.672	31	85	14	25
2	3'-0	2'-6	↑	↑	6"	↑	16	2'-7	↑	85	0.783	↑	↑	↑	↑
3	3'-6	3'-0			1'-0		16	3'-1		91	0.894				
4	4'-0	3'-6			1'-6		20	3'-7		111	1.005				
5	4'-6	4'-0			2'-0		20	4'-1		117	1.116				
6	5'-0	4'-6			2'-6		24	4'-7		137	1.227				
7	5'-6	5'-0			3'-0		24	5'-1		143	1.338				
8	6'-0	5'-6			3'-6		28	5'-7		163	1.450				
9	6'-6	6'-0	↓	↓	4'-0	↓	28	6'-1	↓	169	1.561	↓	↓	↓	↓
10	7'-0	6'-6	2'-6	6"	4'-6	3'-2	32	6'-7	12	188	1.672	31	85	14	25
11	3'-0	2'-6	3'-0	6"	0	3'-8	16	2'-7	12	94	0.944	35	118	18	41
12	3'-6	3'-0	↑	↑	6"	↑	16	3'-1	↑	100	1.074	↑	↑	↑	↑
13	4'-0	3'-6			1'-0		20	3'-7		121	1.203				
14	4'-6	4'-0			1'-6		20	4'-1		128	1.333				
15	5'-0	4'-6			2'-0		24	4'-7		150	1.463				
16	5'-6	5'-0			2'-6		24	5'-1		156	1.592				
17	6'-0	5'-6			3'-0		28	5'-7		184	1.722				
18	6'-6	6'-0			3'-6		28	6'-1		183	1.852				
19	7'-0	6'-6	↓	↓	4'-0	↓	32	6'-7	↓	205	1.981	↓	↓	↓	↓
20	7'-6	7'-0	3'-0	6"	4'-6	3'-8	32	7'-1	12	211	2.111	35	118	18	41

* PLATES A TO D PER GATE

SCHEDULE NO. 2

PIPE SIZE	DIMENSIONS AND QUANTITIES: COVER PLATE		FRAME AND GATE							
D	a	b	B	S	N	PLATE-A 1 EACH	PLATE-B 1 EACH	PLATE-C 2 EACH	GATE SIZE	PLATE-D 1 EACH
18"	2'-7	2'-5½	1'-11	2'-0	12	¼"x2"x1'-11	¼"x2"x2'-0	¼"x1"x1'-10	3/16"x20½"x1'-10	¼"x2½"x2'-0
24"	3'-1	2'-11½	2'-5	2'-6	15	¼"x2"x2'-5	¼"x2"x2'-6	¼"x1"x2'-4	3/16"x26½"x2'-4	¼"x2½"x2'-6

REVISIONS

NO.	DATE	APPR.	REMARKS

UTAH DEPARTMENT OF TRANSPORTATION
STANDARD DRAWINGS FOR ROAD AND BRIDGE CONSTRUCTION
SALT LAKE CITY, UTAH

RECOMMENDED FOR APPROVAL — JULY 03,2002 DATE
CHAIRMAN STANDARDS COMMITTEE APPROVED — JULY 03,2002 DATE
DEPUTY DIRECTOR

STANDARD DRAWING TITLE
STANDARD DIVERSION BOX THREE GATE BOX SECTIONS FOR 18"DIA. OR 24" DIA.PIPE

STD DWG
DB 1F

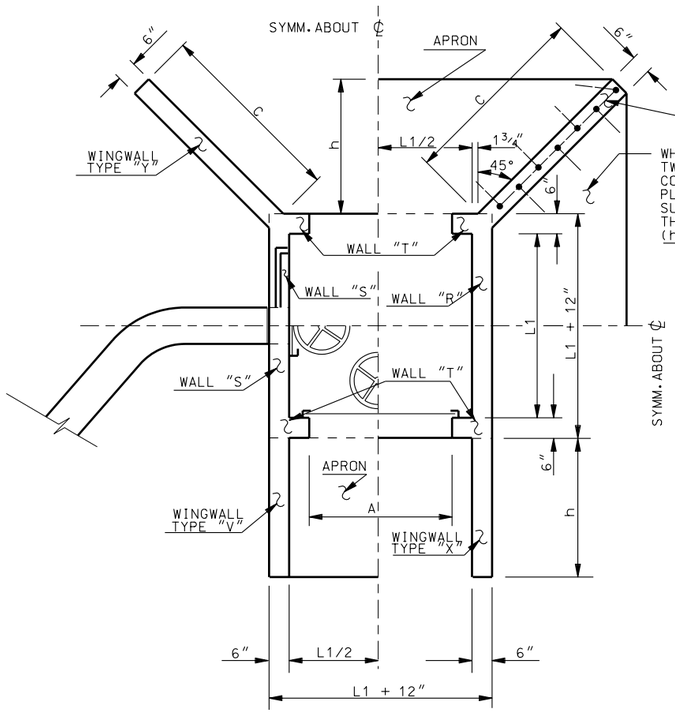

DIVERSION BOX W/INTERCHANGEABLE WALLS
PLAN VIEW

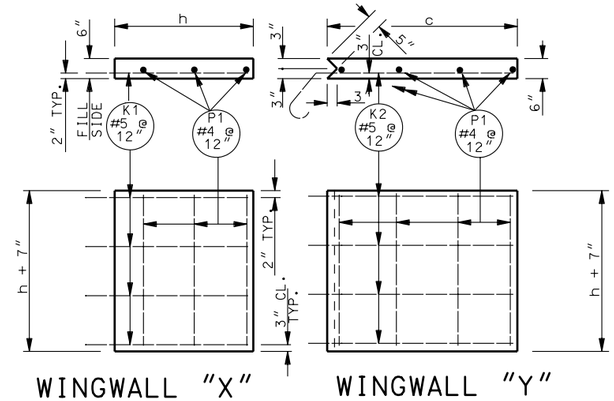

WINGWALL "X" WINGWALL "Y"

NOTES:

INTERPRETATION OF SCHEMATIC SKETCH ON ROADWAY PLAN AND PROFILE SHEET TO INCLUDE:

1. ORIENTATION OF DIVERSION BOX RELATIVE TO ROADWAY CONTROL LINE.
2. TYPE OF WALL SPECIFIED FOR EACH BOX WITH ACCOMPANYING GATE AND CUT-OFF WALL REQUIREMENTS.
3. HINGET LID REQUIREMENTS.
4. FOR GENERAL NOTES SEE STD DWG DB 2B

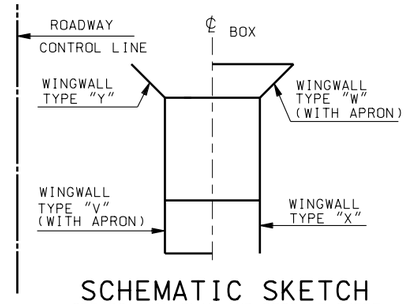

SCHEMATIC SKETCH
SEE ROADWAY PLAN AND PROFILE SHEET

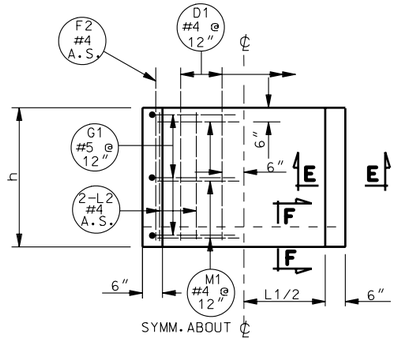

PLAN

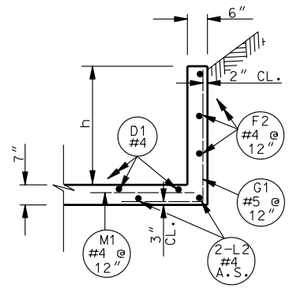

SECTION E-E

APRON & WINGWALLS TYPE "V"

PROVIDE CUT-OFF WALL ONLY WHEN CALLED FOR IN NOTE.
PROVIDE WHEN SO SPECIFIED, FOR ALL APRONS SHOWN IN NOTE.

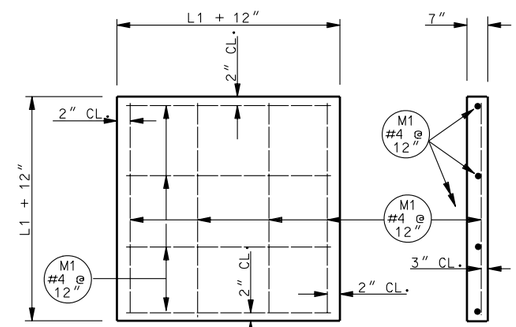

BOTTOM SLAB

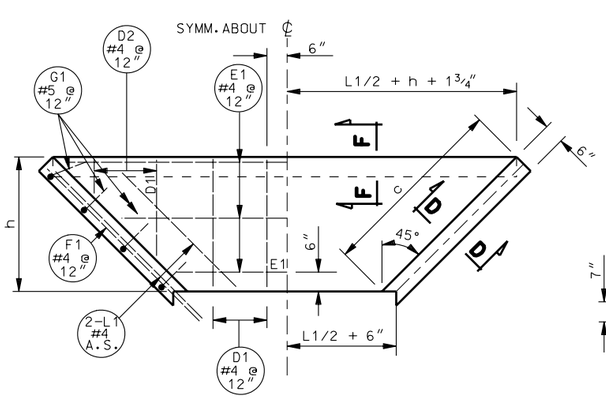

PLAN

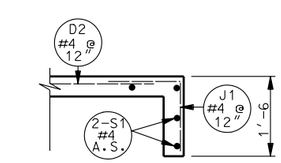

SECTION F-F

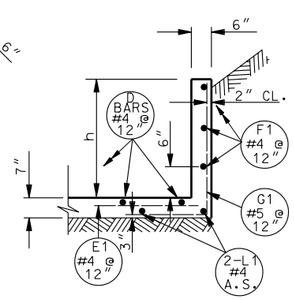

SECTION D-D

APRON & WINGWALLS TYPE "W"

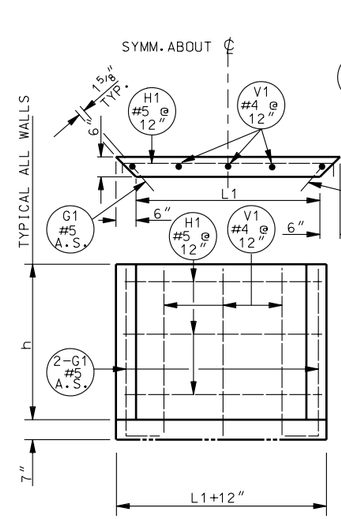

WALL "R"

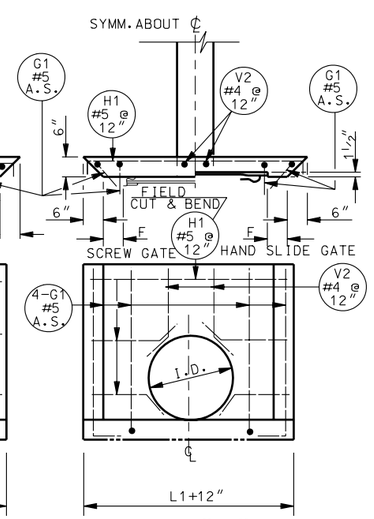

WALL "S"
(PIPE ARCH SIMILAR)

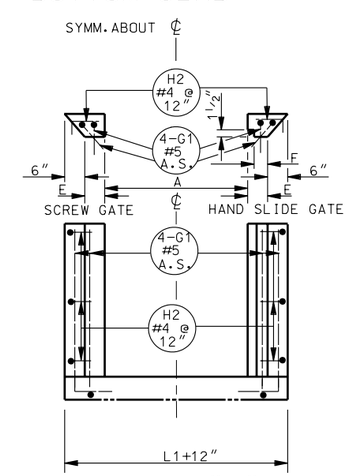

WALL "T"

BOTH "S" AND "T" WALLS HAVE THE OPTION OF HAND SLIDING GATE. WHEN SELECTING THIS OPTION THE CONCRETE LISTED IN THE TABLES ARE TO BE MODIFIED BY SUBTRACTING FROM THEM THE BLOCK-OUT AS DETERMINED BY THESE FORMULAS: "T" WALL - 0.25h(E-F)/27:
"S" WALL- h(L1-2F)(0.125)/2T

NO.	DATE	APPR.	REMARKS

REVISIONS

UTAH DEPARTMENT OF TRANSPORTATION
STANDARD DRAWINGS FOR ROAD AND BRIDGE CONSTRUCTION
SALT LAKE CITY, UTAH

RECOMMENDED FOR APPROVAL — JULY 03,2002 DATE
CHAIRMAN STANDARDS COMMITTEE APPROVED — JULY 03,2002 DATE
DEPUTY DIRECTOR

STANDARD DIVERSION BOX W/INTERCHANGEABLE WALLS BOTTOM SLAB, WALLS AND APRON DETAILS
STANDARD DRAWING TITLE

STD DWG
DB 2A

WINGWALLS WITH ATTACHED APRON

DIVERSION BOX SIZES ARE BASED ON BOTH THE SCREW GATE FRAME SIZES AND THE DIAMETERS OF ROUND PIPE. THEY MAY BE USED WITH EITHER FLUMES, ARCH PIPES OR ROUND PIPES.

γ = NO. OF SETS; B = NO. OF BARS PER SET; AVE. L'GTH = (α + N)/2

TYPE W (part 1: dimensions, E1, D2)

PIPE	LINE NUMBER	DIMENSIONS IN INCHES	FLUME SIZE A x B: SCREW GATE	HAND SLIDE GATE	C	E	F	h	L1	E1 α	E1 W	E1 γ	E1 B	E1 AVE. L'GTH	D2 α	D2 W	D2 γ	D2 B	D2 AVE. L'GTH
I.D.	1	12		12x12	2'-6	6"	3"	1'-9	2'-0	3'-3	5'-5	1	2	4'-4	1'-1	0	2	1	1'-1
	2	18	18x18	18x18	3'-2	6"	3"	2'-3	2'-6	3'-9	6'-11		3	5'-4	1'-7	7"		2	1'-1
	3	24	24x24	24x24	3'-10	6"	3"	2'-9	3'-0	4'-3	8'-5		3	6'-4	2'-1	1'-1		2	1'-7
	4	30	30x30		4'-7	8"	5"	3'-3	3'-10	5'-2	10'-4		4	7'-9	2'-7	7"		3	1'-7
	5	36	36x36		5'-4	8"	5"	3'-9	4'-4	5'-7	11'-9		4	8'-8	3'-1	1'-1		3	2'-1
	6	42	42x42		6'-0	8"	4"	4'-3	4'-10	6'-2	13'-4		5	9'-9	3'-7	7"		4	2'-1
	7	48	48x48		6'-9	9"	5"	4'-9	5'-6	6'-9	14'-11		5	10'10	4'-1	1'-1		4	2'-7
S x R	8	36x22	36x24	36x24	3'-8	8"	5"	2'-7	4'-4	5'-7	9'-5		3	7'-6	1'-11	11"		2	1'-5
	9	43x27	48x30		4'-3	8"	4"	3'-0	5'-4	6'-7	11'-3		3	8'-11	2'-4	1'-4		2	1'-10
	10	50x31	60x36		4'-9	9"	5"	3'-4	6'-6	7'-9	13'-1		4	10'-5	2'-8	8"		3	1'-8
	11	58x36	60x36		5'-4	9"	5"	3'-9	6'-6	7'-9	13'-11		4	10'-10	3'-1	1'-1		3	2'-1
	12	65x40	72x42		5'-9	9"	5"	4'-1	7'-6	8'-9	15'-7		5	12'-2	3'-5	5"		4	1'-11
	13	72x44	72x48		6'-3	9"	5"	4'-5	7'-6	8'-9	16'-3	1	5	12'-6	3'-5	9"	2	4	2'-3

TYPE W (part 2: D1, F1, L1, S1, G1, J1 — G1: θ, 1'-2; J1: 1'-1, 1'-1)

LINE NUMBER	D1 L'GTH	D1 NO.	G1 θ	G1 L'GTH	G1 NO.	F1 L'GTH	F1 NO.	L1 L'GTH	L1 NO.	J1 L'GTH	J1 NO.	S1 L'GTH	S1 NO.	REINFORCING STEEL LB. WITHOUT CUT-OFF WALL	WITH CUT-OFF WALL	CONCRETE CUBIC YARDS WITHOUT CUT-OFF WALL	WITH CUT-OFF WALL
1	2'-7	2	1'-11	3'-1	6	2'-8	4	2'-0	4	2'-2	6	5'-5	2	42.5	58.4	0.362	0.462
2	3'-1	3	2'-5	3'-7	8	3'-4	6	2'-9			9	5'-11		70.4	92.7	0.577	0.690
3	3'-7	3	2'-11	4'-1	10	4'-0	6	3'-5			9	8'-5		91.9	116.2	0.832	0.979
4	4'-1	4	3'-5	4'-7	10	4'-9	8	4'-2			12	10'-4		122.3	153.5	1.169	1.347
5	4'-7	4	3'-11	5'-1	12	5'-6	8	4'-10			12	11'-9		149.7	182.8	1.536	1.739
6	5'-1	5	4'-5	5'-7	14	6'-2	10	5'-6			15	13'-4		198.1	255.4	1.934	2.166
7	5'-7	6	4'-11	6'-1	16	6'-11	10	6'-3			16	14'11		236.8	279.9	2.414	2.674
8	3'-5	4	2'-9	3'-11	10	3'-10	6	3'-2			10	9'-5		92.6	120.0	0.832	0.996
9	3'-10	5	3'-2	4'-4	10	4'-5	6	3'-9			11	11'-3		108.5	139.5	1.123	1.318
10	4'-2	7	3'-6	4'-8	12	4'-11	8	4'-3			15	13'-1		150.0	189.2	1.417	1.645
11	4'-7	7	3'-11	5'-1	12	5'-6	8	4'-10			15	13'-11		164.7	205.0	1.709	1.952
12	4'-11	8	4'-3	5'-5	14	5'-11	10	5'-4			18	15'-7		210.0	256.9	2.040	2.311
13	5'-3	8	4'-7	5'-9	14	6'-5	10	5'-9	4	2'-2	18	16'-3	2	224.0	271.8	2.321	2.603

TYPE V (L2, D1, M1, F2, S1; G1: θ, 1'-2; J1: 1'-1, 1'-1)

G1 θ	G1 L'GTH	G1 NO.	L2 L'GTH	L2 NO.	D1 L'GTH	D1 NO.	M1 L'GTH	M1 NO.	F2 L'GTH	F2 NO.	J1 L'GTH	J1 NO.	S1 L'GTH	S1 NO.	REINFORCING STEEL LB. WITHOUT CUT-OFF WALL	WITH CUT-OFF WALL	CONCRETE CUBIC YARDS WITHOUT CUT-OFF WALL	WITH CUT-OFF WALL	LINE NUMBER
1'-11	3'-1	6	1'-5	4	2'-7	2	2'-8	3	2'-7	4	2'-2	4	2'-8	2	38.8	48.2	0.227	0.278	1
2'-5	3'-7	6	1'-11		3'-1	3	3'-2	3	3'-1	6		5	3'-2		52.4	63.9	0.358	0.417	2
2'-11	4'-1	8	2'-5		3'-7	3	3'-8	4	3'-7	6		5	3'-8		71.9	84.0	0.518	0.586	3
3'-5	4'-7	8	2'-11		4'-1	4	4'-6	4	4'-1	8		6	4'-6		90.8	105.5	0.731	0.813	4
3'-11	5'-1	10	3'-5		4'-7	4	5'-0	5	4'-7	8		6	5'-0		115.6	131.0	0.953	1.044	5
4'-5	5'-7	10	3'-11		5'-1	5	5'-6	5	5'-1	10		7	5'-6		138.0	155.5	1.205	1.304	6
4'-11	6'-1	12	4'-5		5'-7	6	6'-2	6	5'-7	12		8	6'-2		179.8	199.6	1.503	1.613	7
2'-9	3'-11	6	2'-3		3'-5	4	5'-0	3	3'-5	6		6	5'-0		63.4	78.7	0.545	0.636	8
3'-2	4'-4	8	2'-8		3'-10	5	6'-0	4	3'-10	8		7	6'-0		92.6	110.8	0.744	0.854	9
3'-5	4'-8	8	3'-0		4'-2	7	7'-2	4	4'-2	8		9	7'-2		107.9	130.5	0.952	1.079	10
3'-11	5'-1	10	3'-5		4'-7	7	7'-2	5	4'-7	8		9	7'-2		132.0	154.6	1.128	1.255	11
4'-3	5'-5	10	3'-9		4'-11	8	8'-2	5	4'-11	10		10	8'-2		152.9	178.3	1.367	1.511	12
4'-7	5'-9	10	4'-1	4	5'-3	8	8'-2	5	5'-3	10	2'-2	10	8'-2	2	161.3	186.7	1.534	1.678	13

WINGWALLS WITHOUT ATTACHED APRON / WALL TYPES / BOTTOM SLAB

DIVERSION BOX SIZES ARE BASED ON BOTH THE SCREW GATE FRAME SIZES AND THE DIAMETERS OF ROUND PIPE. THEY MAY BE USED WITH EITHER FLUMES, ARCH PIPES OR ROUND PIPES.

WINGWALL X (K1, P1) and WINGWALL Y (P1, K2 — 6", T, 135°)

PIPE	LINE NUMBER	DIMENSIONS IN INCHES	FLUME SIZE A x B: SCREW GATE	HAND SLIDE GATE	C	E	F	h	L1	X: K1 L'GTH	K1 NO.	P1 L'GTH	P1 NO.	REINFORCING STEEL LB.	CONCRETE CUBIC YARDS	Y: K2 T	K2 L'GTH	K2 NO.	P1 L'GTH	P1 NO.	REINFORCING STEEL LB.	CONCRETE CUBIC YARDS
I.D.	1	12		12x12	2'-6	6"	3"	1'-9	2'-0	2'-7	3	1'-11	3	11.9	0.076	2'-9	3'-10	3	1'-11	3	15.8	0.103
	2	18	18x18	18x18	3'-2	6"	3"	2'-3	2'-6	3'-1	3	2'-5	3	14.5	0.118	3'-5	4'-6	3	2'-5	4	20.5	0.160
	3	24	24x24	24x24	3'-10	6"	3"	2'-9	3'-0	3'-7	4	2'-11	4	22.7	0.170	4'-1	5'-2	4	2'-11	4	29.3	0.229
	4	30	30x30		4'-7	8"	5"	3'-3	3'-10	4'-1	4	3'-5	4	26.2	0.231	4'-10	5'-11	4	3'-5	5	36.1	0.317
	5	36	36x36		5'-4	8"	5"	3'-9	4'-4	4'-7	5	3'-11	5	37.0	0.301	5'-7	6'-8	5	3'-11	6	50.5	0.418
	6	42	42x42		6'-0	8"	4"	4'-3	4'-10	5'-1	5	4'-5	5	41.3	0.380	6'-3	7'-4	5	4'-5	6	55.9	0.526
	7	48	48x48		6'-9	9"	5"	4'-9	5'-6	5'-7	6	4'-11	6	54.6	0.469	7'-0	8'-1	6	4'-11	7	73.6	0.654
S x R	8	36x22	36x24	36x24	3'-8	8"	5"	2'-7	4'-4	3'-5	3	2'-9	3	16.2	0.152	3'-11	5'-0	3	2'-9	4	23.0	0.208
	9	43x27	48x30		4'-3	8"	4"	3'-0	5'-4	3'-10	4	3'-2	4	24.5	0.199	4'-6	5'-7	4	3'-2	5	33.9	0.274
	10	50x31	60x36		4'-9	9"	5"	3'-4	6'-6	4'-2	4	3'-6	4	26.7	0.242	5'-0	6'-1	4	3'-5	5	36.8	0.336
	11	58x36	60x36		5'-4	9"	5"	3'-9	6'-6	4'-7	5	3'-11	5	37.0	0.301	5'-7	6'-8	5	3'-11	6	50.5	0.418
	12	65x40	72x42		5'-9	9"	5"	4'-1	7'-6	4'-11	5	4'-3	5	39.8	0.353	6'-0	7'-1	5	4'-3	6	54.0	0.486
	13	72x44	72x48		6'-3	9"	5"	4'-5	7'-6	5'-3	5	4'-7	5	42.7	0.409	6'-6	7'-7	5	4'-7	7	60.5	0.567

WALL TYPES — WALL R (G1: θ, 1'-2; V1; H1: 10", I) and WALL S (G1: θ, 1'-2; V2; H1: 10", I)

LINE NUMBER	R: G1 θ	G1 L'GTH	G1 NO.	H1 I	H1 L'GTH	H1 NO.	V1 L'GTH	V1 NO.	REINFORCING STEEL LB.	CONCRETE CUBIC YARDS	S: G1 θ	G1 L'GTH	G1 NO.	H1 I	H1 L'GTH	H1 NO.	V2 L'GTH	V2 NO.	REINFORCING STEEL LB.	CONCRETE CUBIC YARDS
1	1'-11	3'-1	2	2'-8	4'-4	2	1'-11	2	18.0	0.081	1'-11	3'-1	4	2'-8	4'-4	2	1'-5	1	22.8	0.067
2	2'-5	3'-7		3'-2	4'-10	3	2'-5	2	25.8	0.125	2'-5	3'-7		3'-2	4'-10	3	1'-8	1	31.2	0.092
3	2'-11	4'-1		3'-8	5'-4	3	2'-11	3	31.1	0.179	2'-11	4'-1		3'-8	5'-4	3	1'-11	1	35.0	0.120
4	3'-5	4'-7		4'-6	6'-2	4	3'-5	4	44.4	0.262	3'-5	4'-7		4'-6	6'-2	4	2'-2	2	47.7	0.170
5	3'-11	5'-1		5'-0	6'-8	4	3'-11	4	48.9	0.337	3'-11	5'-1		5'-0	6'-8	4	2'-5	3	53.9	0.205
6	4'-5	5'-7		5'-6	7'-2	5	4'-5	5	63.8	0.422	4'-5	5'-7		5'-6	7'-2	5	2'-8	3	66.0	0.242
7	4'-11	6'-1		6'-2	7'-10	5	4'-11	5	70.0	0.530	4'-11	6'-1		6'-2	7'-10	5	2'-11	4	74.0	0.296
8	2'-9	3'-11		5'-0	6'-8	3	2'-9	4	36.4	0.232	2'-9	3'-11		5'-0	6'-8	3	1'-10	3	40.9	0.150
9	3'-2	4'-4		6'-0	7'-8	3	3'-2	5	43.6	0.326	3'-2	4'-4		6'-10	7'-6	3	2'-1	5	48.5	0.206
10	3'-6	4'-8		7'-2	8'-10	4	3'-6	6	60.6	0.434	3'-6	4'-8		7'-2	8'-10	4	2'-4	5	64.1	0.271
11	3'-11	5'-1		7'-2	8'-10	4	3'-11	6	63.2	0.488	3'-11	5'-1		7'-2	8'-10	4	2'-5	5	66.1	0.275
12	4'-3	5'-5		8'-2	9'-10	4	4'-3	7	72.2	0.608	4'-3	5'-5		8'-2	9'-10	4	2'-7	6	74.0	0.340
13	4'-7	5'-9	2	8'-2	9'-10	5	4'-7	7	84.7	0.657	4'-7	5'-9	4	8'-2	9'-10	5	2'-9	6	86.3	0.328

WALL T (G1: θ, 1'-2; H2: 10") and BOTTOM SLAB (M1)

T: G1 θ	G1 L'GTH	G1 NO.	H2 θ	H2 L'GTH	H2 NO.	REINFORCING STEEL LB.	CONCRETE CUBIC YARDS	SLAB: M1 L'GTH	M1 NO.	REINFORCING STEEL LB.	CONCRETE CUBIC YARDS	LINE NUMBER
1'-11	3'-1	4	10	1'-8	4	17.3	0.049	2'-8	8	14.3	0.194	1
2'-5	3'-7				6	21.6	0.063	3'-2	8	16.9	0.265	2
2'-11	4'-1				6	23.7	0.076	3'-8	10	24.5	0.346	3
3'-5	4'-7				8	28.0	0.110	4'-6	12	36.1	0.505	4
3'-11	5'-1				8	30.1	0.127	5'-0	12	40.1	0.614	5
4'-5	5'-7				10	34.4	0.144	5'-6	14	51.4	0.735	6
4'-11	6'-1				10	36.5	0.176	6'-2	14	57.7	0.913	7
2'-9	3'-11				6	23.0	0.088	5'-0	12	40.1	0.614	8
3'-2	4'-4				6	24.8	0.102	6'-0	16	64.1	0.867	9
3'-5	4'-8				8	28.4	0.124	7'-2	16	76.6	1.215	10
3'-11	5'-1				8	30.1	0.139	7'-2	16	76.6	1.215	11
4'-3	5'-5				8	31.5	0.151	8'-2	18	98.2	1.561	12
4'-7	5'-9	4	10	1'-8	10	35.1	0.164	8'-2	18	98.2	1.561	13

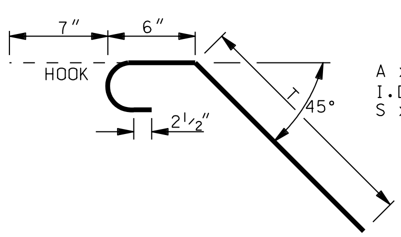

A x B - FLUME SIZE OR GATE SIZE
I.D. - INSIDE DIAMETER OF ROUND PIPE
S x R - SPAN x RISE OF ARCH PIPE

180° STANDARD HOOK DETAIL

NOTES:

1. FOR TRANSITION STRUCTURE FROM DIVERSION BOX TO TRAPEZOIDAL SHAPED CHANNEL WITH BOTTOM WIDTH OF 1'-0". SEE STD DWG CB 3
2. ALL DIMENSIONS ARE ROUNDED TO THE NEAREST WHOLE INCH. THOSE DIMENSIONS SHOWN FOR REBAR ARE OUT-TO-OUT OF BAR.
3. WHEN LAYING-OUT SET REBAR, USE "α" AND "W" DIMENSIONS NOT AVERAGE LENGTH OF REBAR.
4. USE STANDARD 180 DEGREE HOOK FOR K2 BAR AS NOTED.
5. USE #5 REBARS FOR K1, K2, G1 AND H1 MARK NUMBERS. ALL REMAINING MARK NUMBERS ARE #4 REBARS.
6. SAME SIZE BOX IS REQUIRED FOR BOTH METAL PIPE AND CONCRETE PIPE.

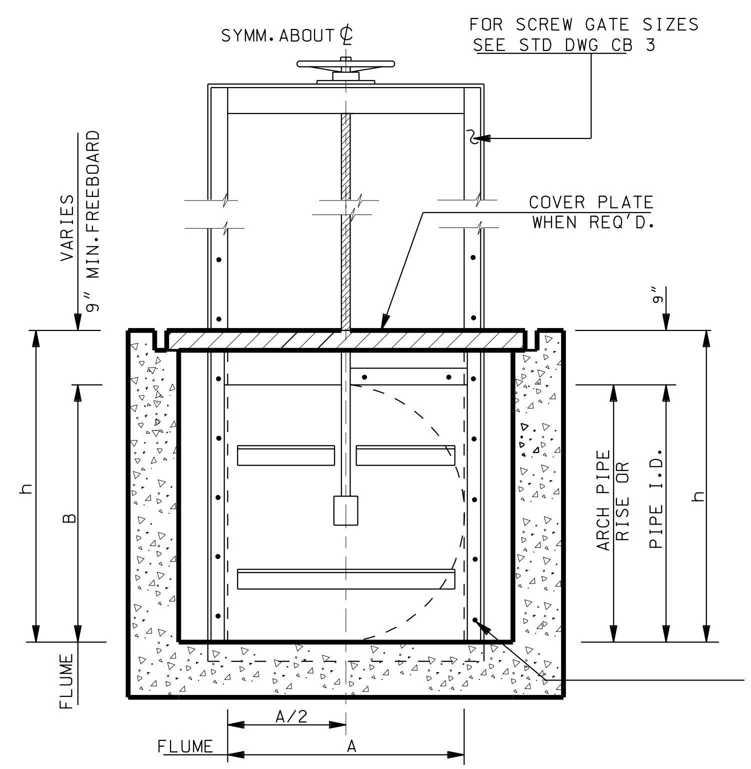

SCREW GATE INSTALLATION DIAGRAM

NOTES:

1. USE COATED DEFORMED BILLET REINFORCING STEEL BARS CONFORMING TO ASSHTO M 284 OR M 111 AND M 31 GRADE 60 RESPECTIVELY.
2. USE TYPE II CEMENT (LOW ALKALI) AND STRUCTURAL CONCRETE UNLESS SPECIFIED OTHERWISE.
3. CHAMFER ALL EXPOSED CONCRETE CORNERS ¾" EXCEPT WHERE NOTED OTHERWISE.
4. USE CLASS AA(AE) CAST-IN-PLACE CONCRETE EXCEPT WHERE NOTED OTHERWISE, SPECIFIED OTHERWISE.
5. EACH LINE DESCRIBES THE QUANTITIES FOR ONE WALL OR SLAB OF THE TYPE SPECIFIED. USE THIS DRAWING IN CONJUNCTION WITH ROADWAY PLAN AND PROFILE, AND ROADWAY SUMMARY SCHEDULES TO DETERMINE THE SPECIFICS CONCERNING EACH DIVERSION BOX.

DESIGN DATA

HS-20 OR INTERSTATE ALTERNATE LOADING IN ACCORDANCE WITH CURRENT AASHTO AND INTERIM SPECIFICATIONS.
CAST-IN-PLACE STRUCTURAL CONCRETE: Fc = 1,400 psi N = 8
REINF. STEEL: Fs = 24,000 psi

REVISIONS | NO. | DATE | APPR. | REMARKS

UTAH DEPARTMENT OF TRANSPORTATION
STANDARD DRAWINGS FOR ROAD AND BRIDGE CONSTRUCTION
SALT LAKE CITY, UTAH

RECOMMENDED FOR APPROVAL — JULY 03,2002 DATE
CHAIRMAN STANDARDS COMMITTEE APPROVED
DEPUTY DIRECTOR — JULY 03,2002 DATE

STANDARD DIVERSION BOX W/INTERCHANGEABLE WALLS QUANTITIES SCHEDULE
STANDARD DRAWING TITLE

STD DWG
DB 2B

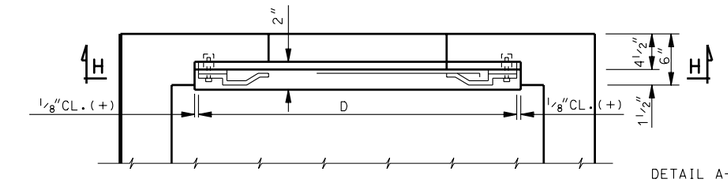

PARTIAL PLAN

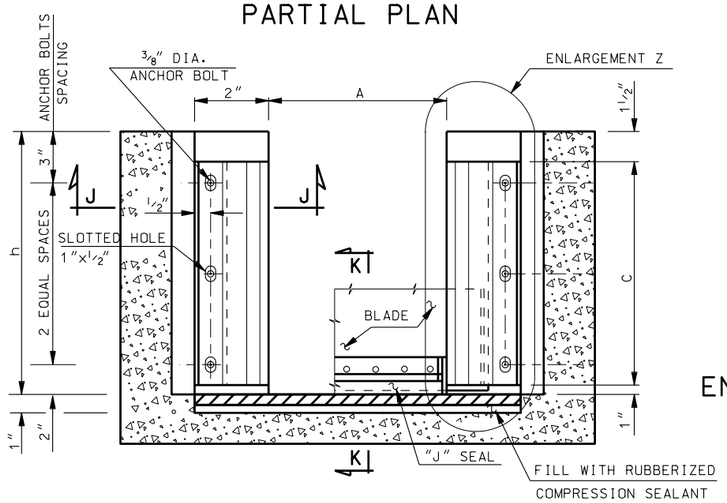

SECTION H-H
TYPE Ga
REQUIRED WITH FLUME

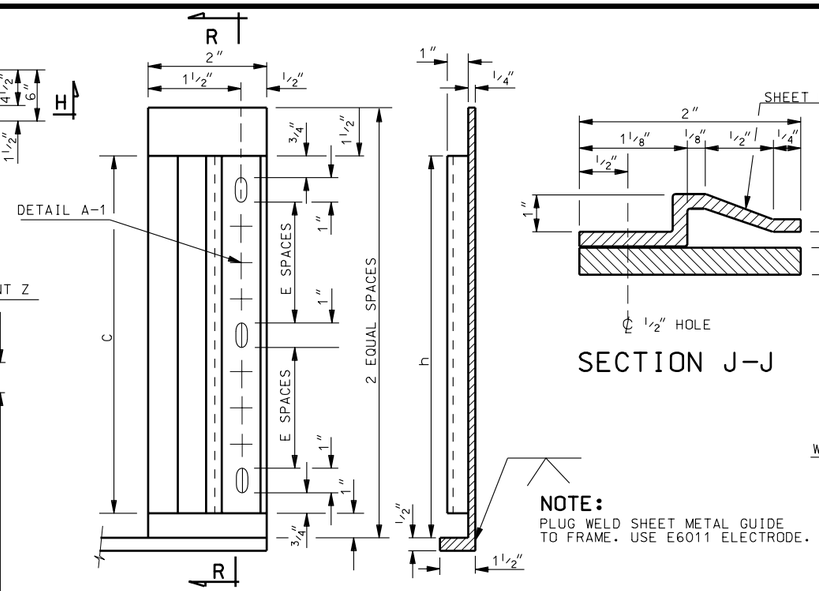

ENLARGEMENT Z

SECTION R-R

NOTE:
PLUG WELD SHEET METAL GUIDE TO FRAME. USE E6011 ELECTRODE.

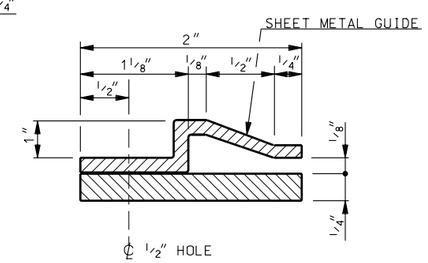

SECTION J-J

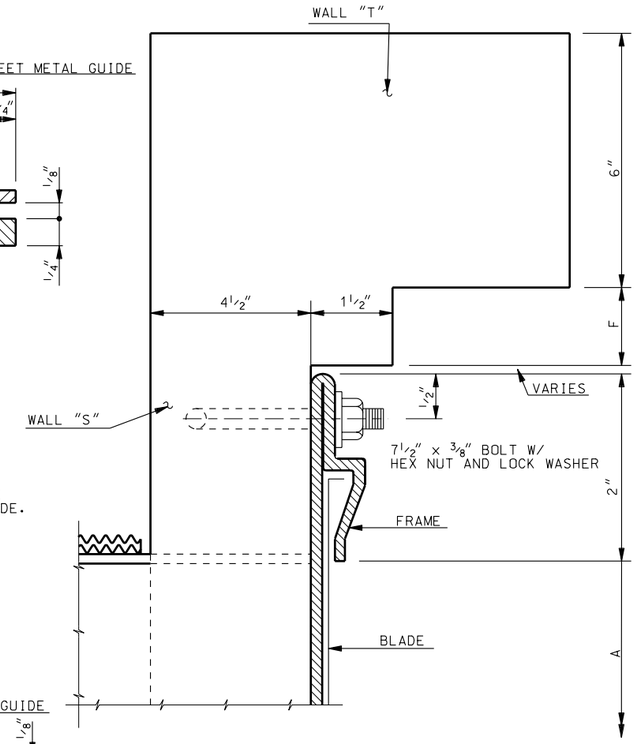

SECTION L-L

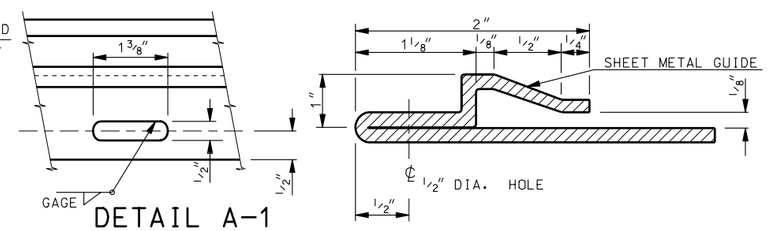

DETAIL A-1

SECTION M-M

NOTE:
WELD FRAME WATER-TIGHT TO THE END OF THE METAL PIPE. GAGE OF METAL PIPE IS THE SAME AS THE GAGE OF THE FRAME.

NOTE:
NUMBER OF SLOT WELDS TO ONE LESS THAN THE NUMBER OF E SPACES.

NOTES:

1. INSTALL SHEET METAL FRAME PERPENDICULAR TO THE FLOOR OF THE BOX PRIOR TO CASTING THE WALLS. BE CAREFUL NOT TO SCAR OR OTHERWISE DAMAGE THE FRAYING SURFACES BETWEEN THE BLADE AND THE FRONT FACE OF THE FRAME SO THAT FRAME REMAINS WATER-TIGHT WHEN CLOSED.
2. FABRICATE THE BLADE AND FRAME OF ZINC COATED STEEL. CONFORM TO AASHTO M 218

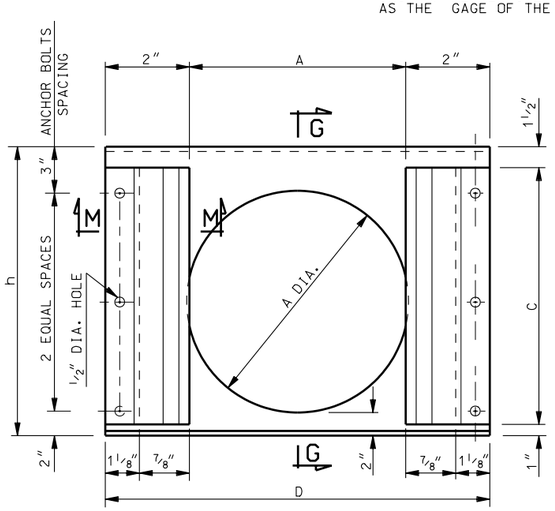

TYPE Ga

REQUIRED WITH PIPE
ROUND PIPE SHOWN
ARCH PIPE SIMILAR

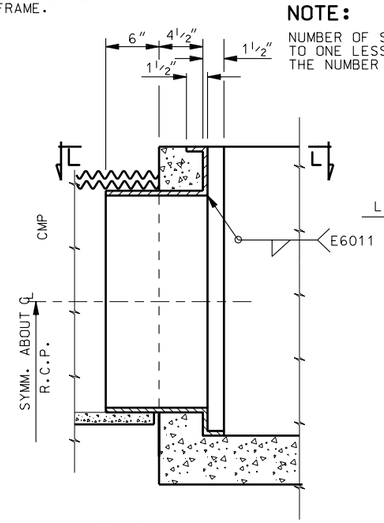

SECTION G-G

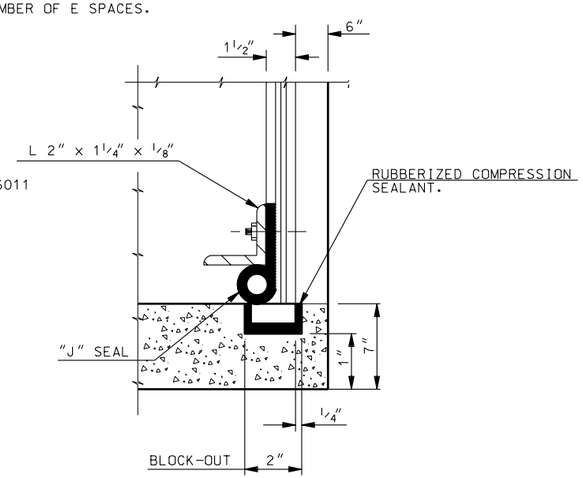

SECTION K-K

DESIGN DATA

HS-20 OR INTERSTATE ALTERNATE LOADING IN ACCORDANCE WITH CURRENT AASHTO AND INTERIM SPECIFICATIONS.
CAST-IN-PLACE STRUCTURAL CONCRETE: Fc = 1,400 psi, N = 8
REINF. STEEL: Fs = 24,000 psi

NOTES:

1. ALL BOLTS: A-307 BOLTS UNLESS OTHERWISE INDICATED.
2. GALVANIZED FASTENERS:CONFORM TO ASTM STANDARDS A 307 AND A 164.

NO.	DATE	APPR.	REMARKS

REVISIONS

UTAH DEPARTMENT OF TRANSPORTATION
STANDARD DRAWINGS FOR ROAD AND BRIDGE CONSTRUCTION
SALT LAKE CITY, UTAH

RECOMMENDED FOR APPROVAL — JULY 03,2002 DATE
CHAIRMAN STANDARDS COMMITTEE APPROVED — JULY 03,2002 DATE
DEPUTY DIRECTOR

STANDARD DIVERSION BOX W/INTERCHANGEABLE WALLS HAND SLIDE GATE DETAILS
STANDARD DRAWING TITLE

STD DWG
DB 2C

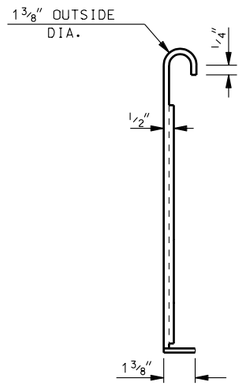

SECTION THRU PIPE OR PIPE ARCH BLADE

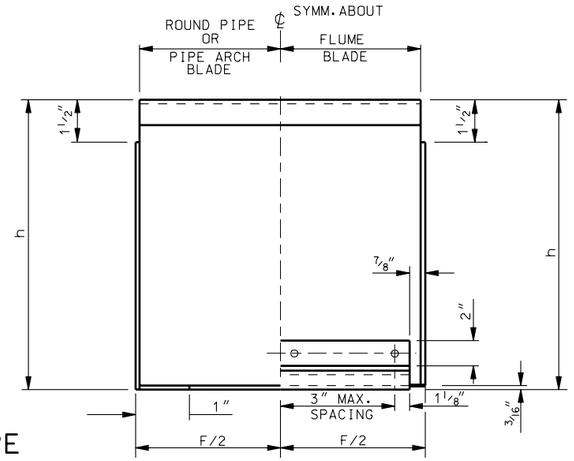

HAND SLIDE GATE BLADE DETAILS

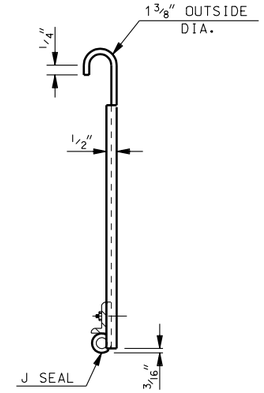

SECTION THRU FLUME BLADE

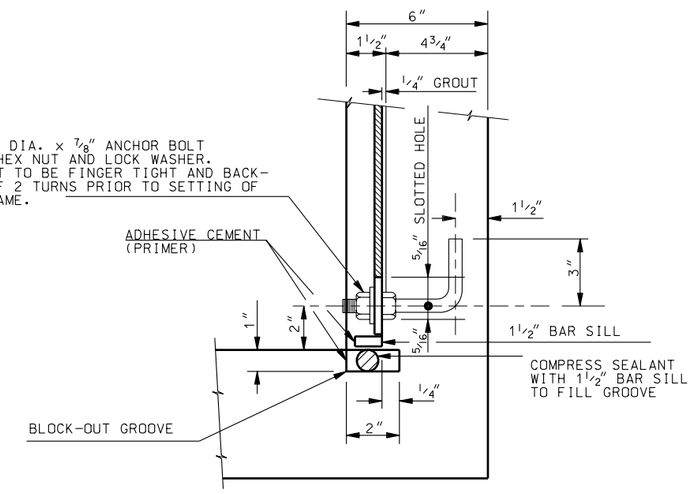

INSTALLATION SKETCH A

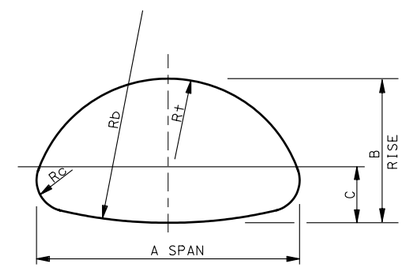

PIPE-ARCH DIMENSIONS					
SPAN	RISE	LAYOUT DIMENSIONS			
		C	Rc	Rt	Rb
36"	22"	6 1/4"	5"	18 1/4"	73 1/4"

NOTE: PIPE-ARCH LAYOUT IN SHEET METAL FRAME TO CONFORM TO THESE DIMENSIONS.

NOTES:

1. USE STRUCTURAL CARBON FOR ALL BAR AND ANGLE STEEL CONFORMING TO AASHTO DESIGNATION M 270, GRADE 36. HOT-DIP GALVANIZE AFTER FABRICATION IN ACCORDANCE WITH AASHTO DESIGNATION M-111.

2. FABRICATE GUIDES, BLADES, AND SHEET METAL FRAMES OF HAND SLIDE GATES OF ZINC COATED STEEL CONFORMING TO THE REQUIREMENTS OF SPECIFICATION ASTM A 653.

3. "J" SEALS: MOLDED OR EXTRUDED NEOPRENE OR EPDM (ETHYLENE PROPYLENE) OF PROPER LENGTH, CURED TO ENSURE A DENSE HOMOGENEOUS CROSS SECTION FREE FROM PITTING, BLISTERS OR POROSITY, MEETING THE FOLLOWING SPECIFICATIONS WHEN TESTED IN ACCORDANCE WITH APPLICABLE PROVISIONS OF ASTM D 412, D 471, D 2240 AND D 395.

   SHORE A DUROMETER HARDNESS---------- 60 ± 5

	NEOPRENE	EPDM
MINIMUM ELONGATION	450%	35%
ULTIMATE TENSILE STRENGTH	2,500 psi	2,000 psi
COMPRESSION SET (MAX.)	30%	25%

   BOTH MATERIALS

   ABSORPTION (2 DAYS)----------5% BY WEIGHT
   TENSILE STRENGTH (48 HOURS IN OXYGEN 8% OF BEGINNING STRENGTH @ 70°C AND 300 psi PRESSURE.)
   ACCURATELY LOCATE AND DRILL ALL HOLES IN SEAL WITH 1/8" OVERSIZE HOLLOW-CORE DRILL.

4. COMPRESSION SEALANT: 1 1/2 INCH DIA., TOP GRADE BUTYL RUBBER OF DENSE, HIGHLY COMPRESSIBLE, STABLE MATERIAL WITH GOOD SAG AND ADHESION PROPERTIES PRODUCED FROM BLENDS OF REFINED HYDROCARBON RESINS AND PLASTICIZING COMPOUNDS, REINFORCED WITH INERT MINERAL FILLERS CONTAINING NO SOLVENTS, IRRITATING FUMES OR OBNOXIOUS ODORS NOT DEPENDENT ON OXIDIZING, EVAPORATING OR CHEMICAL ACTION FOR ADHESIVE OR COHESIVE STRENGTH HAVING THE FOLLOWING PROPERTIES:

CHEMICAL COMPOSITION COMPONENTS	MIN.	MAX.	ASTM SPEC.
BITUMEN (HYDROCARBON PLASTIC CONTAIN) % BY WT.	50	70	D4,D140
INERT MINERAL FILLER % BY WT.	30	50	D545
VOLATILE MATTER % BY WT.		2.0	D6

PHYSICAL PROPERTIES	REQUIRED	
SPECIFIC GRAVITY @ 77°F (25°C)	1.20 TO 1.35	D7
DUCTILITY @ 77°F 25°C MIN.	5.0 c. m.	D113
SOFTENING POINT @ 77°F MIN.	320°F	D36
FLASH POINT c.o.c. MIN.	600°F	D92
FIRE POINT c.o.c. MIN.	625°F	D92
PENETRATION 77°F (25°C) 150 gs. 5 sec	50 to 120	D217

   TESTS:

   REJECT IF ONE OR MORE TEST SPECIMENS OF THE LOT REPRESENTING THE SPECIMENT, FAIL TO MEET ASTM REQUIREMENTS

5. BOTH FRAMES CAN BE USED WITH TYPE "G" HAND SLIDE GATES. SPECIFY WHETHER TYPE Ga OR Gb FRAME IS REQUIRED. SEE STD DWG DB 2C FOR FRAME TYPES. NORMALLY THE NUMBER OF GATES EQUAL THE NUMBER OF OPENINGS LESS ONE.

6. THE RUBBER SEAL FOR FLUSH BOTTOM CLOSURE: CONFORM TO ASTM D-2000.

7. MAKE FLUSH WITH FLOOR OF BOX TOP OF BAR SILL AFTER FRAME HAS BEEN PROPERLY PLUMBED AND LEVELED. GROUT FRAME IN PLACE WITH A CEMENT GROUT.

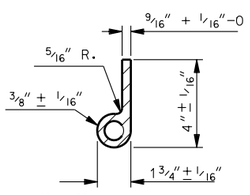

"J" SEAL

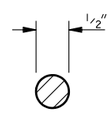

COMPRESSION SEALANT

FLEXIBLE JOINT SEALANT TYP. CROSS-SECTION

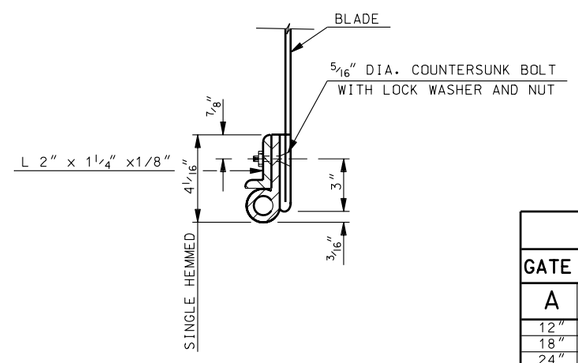

PART SECT. THRU FLUME BLADE

DIMENSION SCHEDULE															
GATE SIZE		FLUME								PIPE OR PIPE ARCH					
A	B	FRAME		GUIDE			BLADE			SHEET METAL FRAME				BLADE	
		D	h	C	GAGE	E	F	GAGE		A	h	D	GAGE	F	GAGE
12"	12"	1'-4 1/4	1'-9	1'-6 1/2	16	2	1'-1 1/2	16		12"	1'-9	1'-4 1/4	16	1'-1 1/2	16
18"	18"	1'-10 1/4	2'-3	2'-0 1/2	14	3	1'-7 1/2	14		18"	2'-3	1'-10 1/4	14	1'-7 1/2	14
24"	24"	2'-4 1/4	2'-9	2'-6 1/4	10	4	2'-1 1/2	10		24"	2'-9	2'-4 1/4	10	2'-1 1/2	10
36"	24"	3'-5 1/4	2'-7	2'-4 1/2	10	4	3'-1 1/2	8		36"	2'-7	3'-5 1/4	10	3'-1 1/2	8

NO.	DATE	APPR.	REMARKS

REVISIONS

UTAH DEPARTMENT OF TRANSPORTATION
STANDARD DRAWINGS FOR ROAD AND BRIDGE CONSTRUCTION
SALT LAKE CITY, UTAH

RECOMMENDED FOR APPROVAL — JULY 03,2002 DATE

CHAIRMAN STANDARDS COMMITTEE APPROVED — JULY 03,2002 DATE

DEPUTY DIRECTOR

STANDARD DIVERSION BOX TYPE "G" HAND SLIDE GATE DETAILS

STANDARD DRAWING TITLE

STD DWG
DB 2D

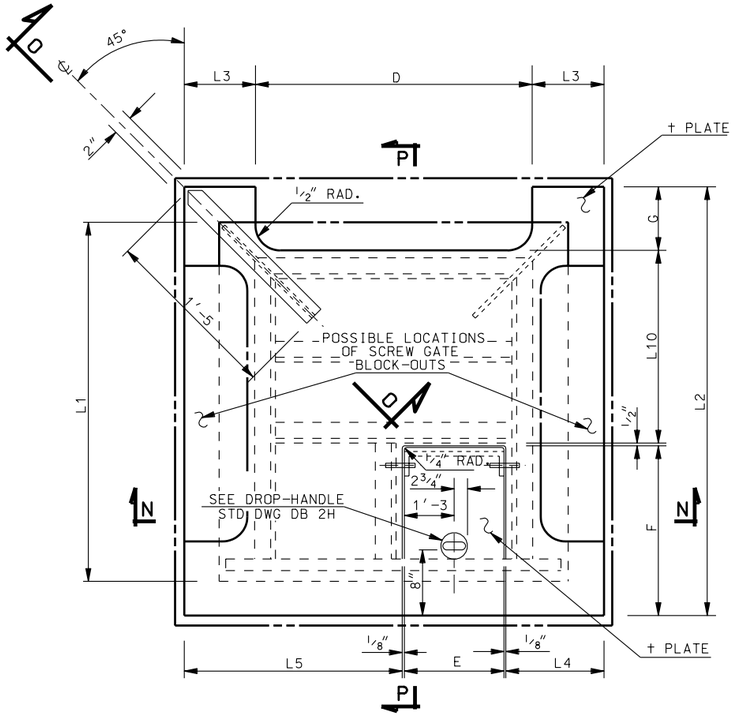

SOLID COVER TYPE ''A'' DETAILS
PLAN

SOLID COVER TYPE "A" SUB-FRAME TYPE "I" DIMENSIONS

LINE NO.	SCREW GATE		WALL SIZE	BLOCK-OUT		HINGED LID			COVER PLATE					SUB-FRAME TYPE I						
	A	B	L1	D	G	E	F	†	L2	†	L3	L4	L5	L6	L7	L8	L9	L10	L11	L12
1	36	36	4'-4	3'-5 1/4	8 1/2"	2'-6	3'-4 5/8	1/4"	5'-3	1/4"	10 7/8"	1'-0	1'-8 3/4	6 1/2"	8"	9 3/4"	9 3/16"	1'-1 3/8	4'-3 1/2	3'-3
2	42	42	4'-10	4'-0 1/2	9 1/2"			1/4"	5'-9	1/4"	10 1/4"	1'-1	2'-1 3/4	7 1/2"	1'-0	1'-2 3/4	10 5/8"	1'-6 3/8	4'-9 1/2	3'-7
3	48	48	5'-6	4'-7 1/2	9 1/2"			1/4"	6'-5	1/4"	10 3/4"	1'-1	2'-9 3/4	7 1/2"	1'-8	1'-10 3/4	10 5/8"	2'-2 3/8	5'-5 1/2	4'-3
4	36	24	4'-4	3'-5 1/4	8 1/2"			1/4"	5'-3	1/4"	10 7/8"	1'-0	1'-8 3/4	6 1/2"	8"	9 3/4"	9 3/16"	1'-1 3/8	4'-3 1/2	3'-3
5	48	30	5'-4	4'-6 1/4	9 1/2"			1/4"	6'-3	1/4"	10 3/8"	1'-1	2'-7 3/4	7 1/2"	1'-6	1'-8 3/4	10 5/8"	2'-0 3/8	5'-3 1/2	4'-1
6	60	36	6'-6	5'-7 1/4	9 1/2"			3/8"	7'-5	3/8"	10 7/8"	1'-1	3'-9 3/4	7 1/2"	2'-8	2'-10 3/4	10 5/8"	3'-2 3/8	6'-5 1/2	5'-3
7	72	42	7'-6	6'-7 1/4	9 1/2"			3/8"	8'-5	3/8"	10 7/8"	1'-1	4'-9 3/4	7 1/2"	3'-8	3'-10 3/4	10 5/8"	4'-2 3/8	7'-5 1/2	6'-3
8	72	48	7'-6	6'-7 1/4	9 1/2"	2'-6	3'-4 5/8	3/8"	8'-5	3/8"	10 7/8"	1'-1	4'-9 3/4	7 1/2"	3'-8	3'-10 3/4	10 5/8"	4'-2 3/8	7'-5 1/2	6'-3

NOTE:
DRILL 2- 1 1/16" DIA. HOLES IN BOTH SUB-FRAME AND HINGED LID.

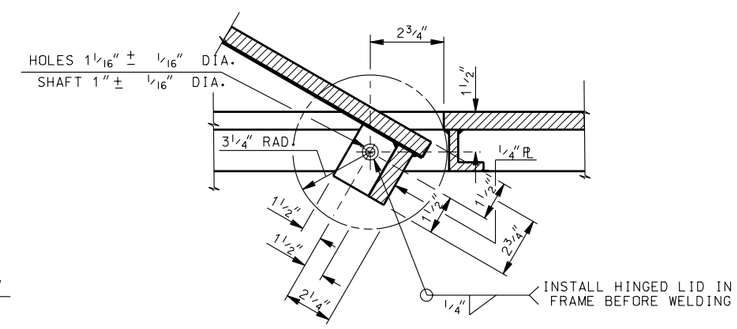

ENLARGEMENT X

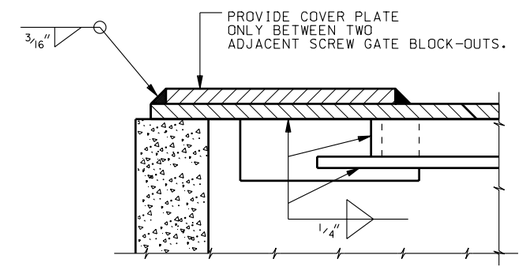

SECTION O-O

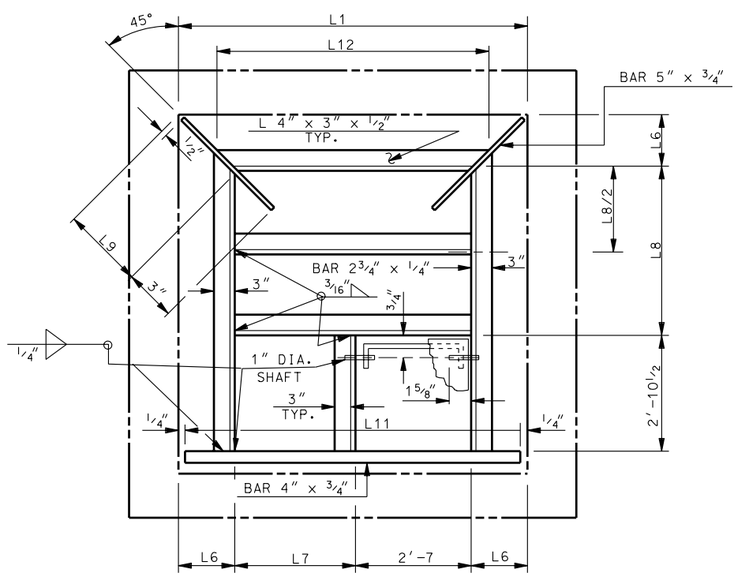

SOLID COVER TYPE ''A'' DETAILS
SUB-FRAME TYPE ''I'' PLAN

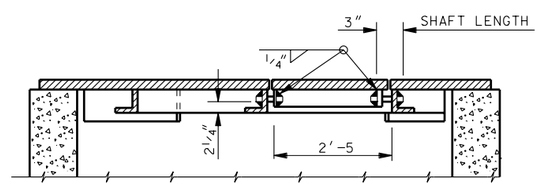

SECTION N-N

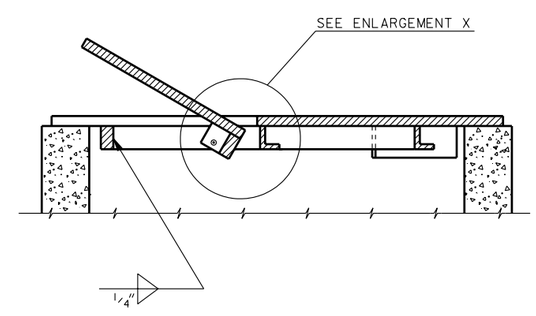

SECTION P-P

NO.	DATE	APPR.	REMARKS

REVISIONS

UTAH DEPARTMENT OF TRANSPORTATION
STANDARD DRAWINGS FOR ROAD AND BRIDGE CONSTRUCTION
SALT LAKE CITY, UTAH

RECOMMENDED FOR APPROVAL — JULY 03,2002 DATE

CHAIRMAN STANDARDS COMMITTEE APPROVED — JULY 03,2002 DATE

DEPUTY DIRECTOR

STANDARD DRAWING TITLE
STANDARD DIVERSION BOX
HINGED LID
(SOLID COVER PLATE)
TYPE"A" DETAILS
TYPE I PLAN

STD DWG
DB 2E

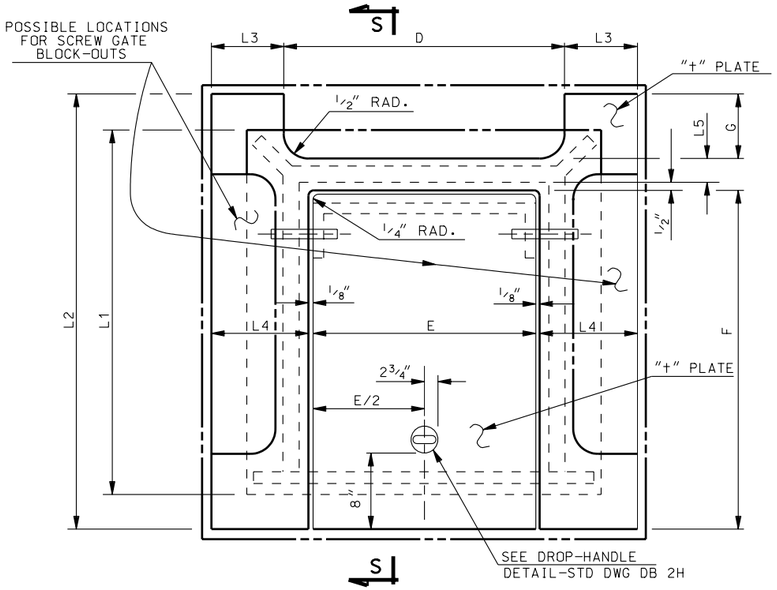

SOLID COVER TYPE "A" DETAILS
PLAN

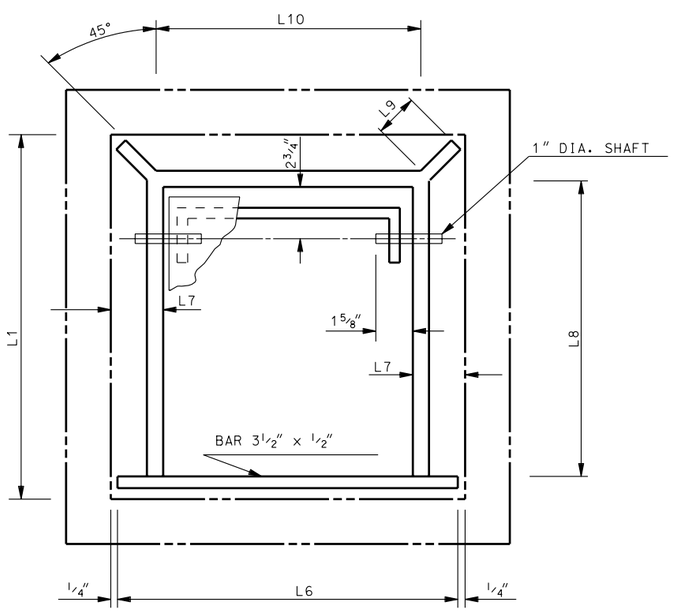

SOLID COVER TYPE "A" DETAILS
SUB-FRAME TYPE II PLAN

SOLID COVER TYPE ''A'' SUB-FRAME TYPE II DIMENSIONS

LINE NO.	SCREW GATE		WALL SIZE	BLOCK-OUT		HINGED LID			COVER PLATE					SUB-FRAME TYPE II				
	A	B	L1	D	G	E	F	+	L2	+	L3	L4	L5	L6	L7	L8	L9	L10
1	18	18	2'-6	1'-10 1/4	8 1/2"	1'-8 1/4	2'-6 1/2	1/4"	3'-5	1/4"	9 3/8"	10 1/4"	1 1/2"	2'-5 1/2	4 3/4"	2'-0 1/2	4 1/4"	1'-11 1/2
2	24	24	3'-0	2'-4 1/4	8 1/2"	2'-2 1/4	3'-0 1/2	1/4"	3'-11	1/4"	9 3/8"	10 1/4"	1 1/2"	2'-11 1/2	4 3/4"	2'-6 1/4	4 1/2"	2'-5 1/8
3	30	30	3'-10	2'-11 1/4	8 1/2"	2'-6	3'-10 1/2	1/4"	4'-9	1/4"	10 1/8"	1'-1 3/8	1 1/2"	3'-9 1/2	7 1/8"	3'-4 1/4	4 1/2"	3'-3 1/8

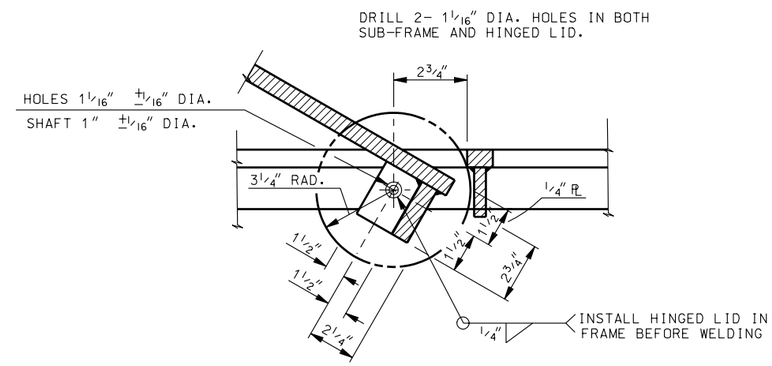

ENLARGEMENT Y

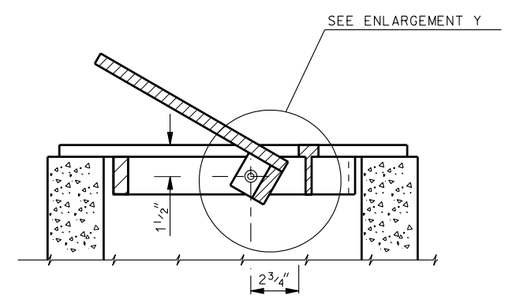

SECTION S-S

USE BAR 3 1/2" x 1/2" DIA. FOR ALL MEMBERS OF SUB-FRAME EXCEPT AS NOTED.

NO.	DATE	APPR.	REMARKS

REVISIONS

UTAH DEPARTMENT OF TRANSPORTATION
STANDARD DRAWINGS FOR ROAD AND BRIDGE CONSTRUCTION
SALT LAKE CITY, UTAH

RECOMMENDED FOR APPROVAL — JULY 03,2002 DATE

CHAIRMAN STANDARDS COMMITTEE APPROVED — JULY 03,2002 DATE

DEPUTY DIRECTOR

STANDARD DIVERSION BOX
HINGED LID
(SOLID COVER PLATE)
TYPE "A" DETAILS
TYPE II PLAN

STANDARD DRAWING TITLE

STD DWG
DB 2F

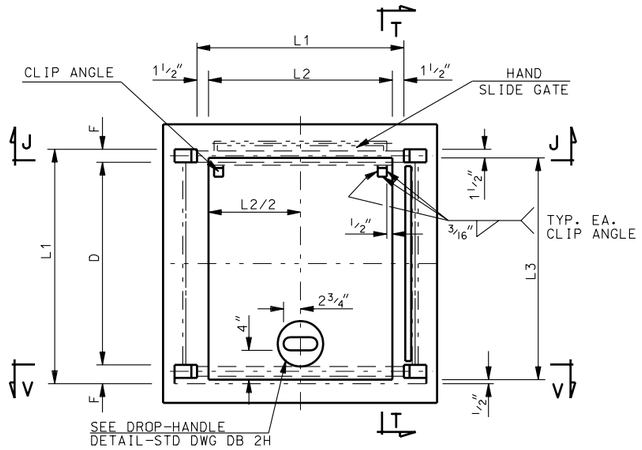

PLAN

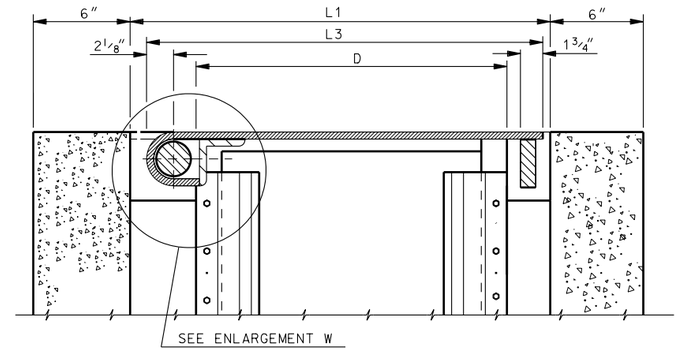

SECTION T-T

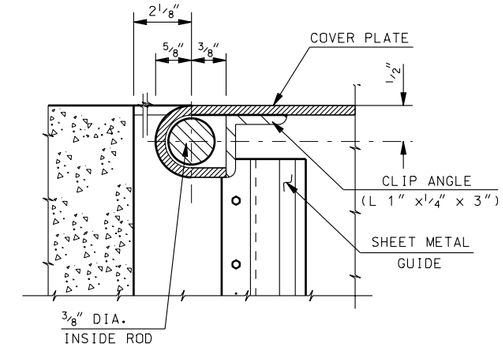

ENLARGEMENT W

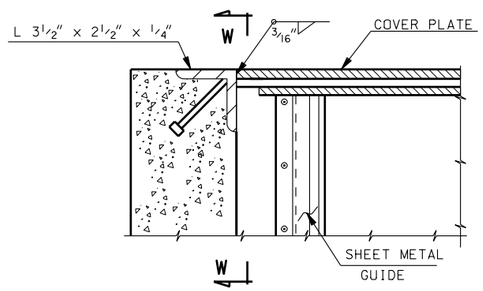

SECTION J-J

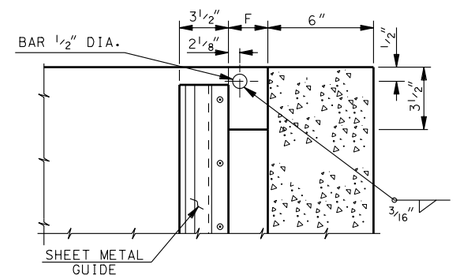

SECTION W-W

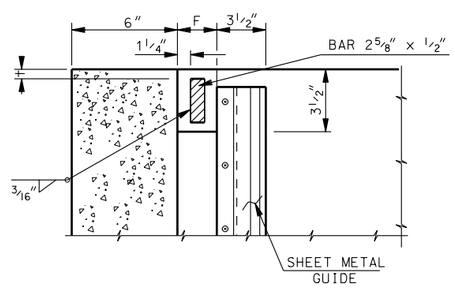

SECTION X-X

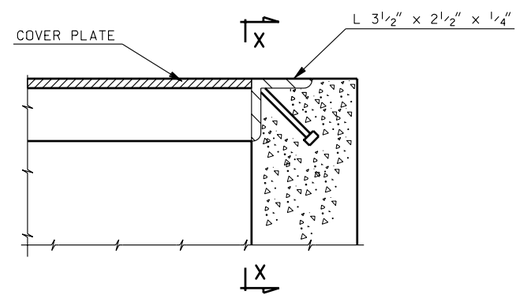

SECTION V-V

SOLID COVER TYPE ''B'' DETAILS

NOTES:

1. PREFORMED JOINT MATERIAL: AASHTO DESIGNATION M 213
2. ALL STRUCTURAL STEEL EITHER STRUCTURAL CARBON STEEL CONFORMING TO AASHTO DESIGNATION M 270, GRADE 36 OR A RAISED PATTERN CARBON STEEL (U.S. STEEL S 300) OR USED IN SIDEWALK LOCATIONS ONLY.
3. HOT DIP GALVANIZE HINGED LID SOLID COVERS AFTER FABRICATION IN ACCORDANCE WITH AASHTO DESIGNATION M 111 (ASTM A 123).
4. WHEN HINGED LID IS PLACED IN SIDEWALK LOCATIONS, PROVIDE A RUBBED FINISH FOR ALL BEARING SURFACES AT TOP OF WALL. AT THE DISCRETION OF THE ENGINEER, RECESS THE COVER PLATE THE THICKNESS OF THE COVER PLATE AND USE A CEMENT GROUT ON ALL BEARING SURFACES TO LEVEL THE HINGED LID.
5. DO NOT USE THIS DRAWING IN ROADWAY APPLICATIONS WHERE THE HINGED LID IS SUBJECTED TO A WHEEL LOAD.
6. AUTOMATICALLY END WELD THE 1/2" x 4 1/8" H4-L NELSON CONCRETE ANCHOR TO THE FILLET OF THE ANGLE. CENTER ANCHOR ABOUT FILLET.

DESIGN DATA

THE DESIGN IS IN ACCORDANCE WITH CURRENT AASHTO AND INTERIM SPECIFICATIONS.
LOADING - COVER PLATES ARE DESIGNED FOR A LOAD OF 600 lbs/sq ft
Fs=20,000 psi

SOLID COVER TYPE ''B'' DIMENSIONS

LINE NO.	HAND SLIDE GATE		WALL SIZE	COVER PLATE				
	A	B	L1	D	F	L2	L3	t
1	12	12	2'-0	1'-4 1/4	3"	1'-9	1'-10	1/4"
2	18	18	2'-6	1'-10 1/4	3"	2'-3	2'-4	1/4"
3	24	24	3'-0	2'-4 1/4	3"	2'-9	2'-10	1/4"
4	36	24	4'-4	3'-5 1/4	5"	4'-1	4'-2	1/4"

REVISIONS

NO.	DATE	APPR.	REMARKS

UTAH DEPARTMENT OF TRANSPORTATION
STANDARD DRAWINGS FOR ROAD AND BRIDGE CONSTRUCTION
SALT LAKE CITY, UTAH

RECOMMENDED FOR APPROVAL — JULY 03,2002 DATE

CHAIRMAN STANDARDS COMMITTEE APPROVED — JULY 03,2002 DATE

DEPUTY DIRECTOR

STANDARD DIVERSION BOX
HINGED LID SOLID COVER
TYPE "B" DETAILS

STANDARD DRAWING TITLE

STD DWG
DB 2G

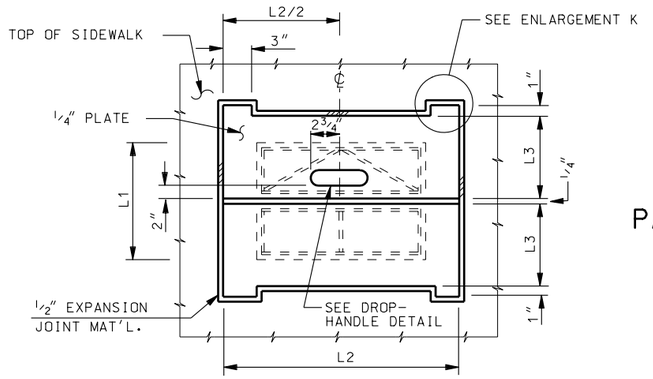

PLAN

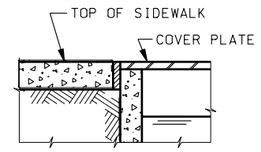

PARTIAL SECTION

PAINT THIS SIGN ON COVER PLATE AFTER FABRICATION WITH LETTERS 2" IN HEIGHT: "RAISE COVER PLATE TO CHANGE GATES"

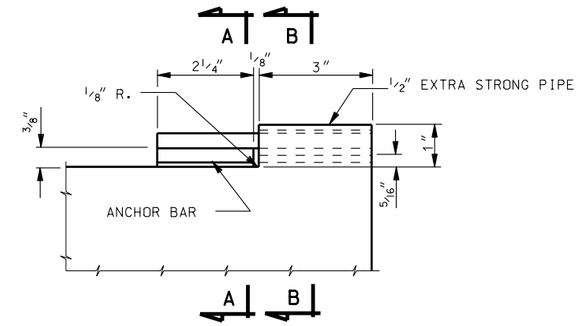

ENLARGEMENT K

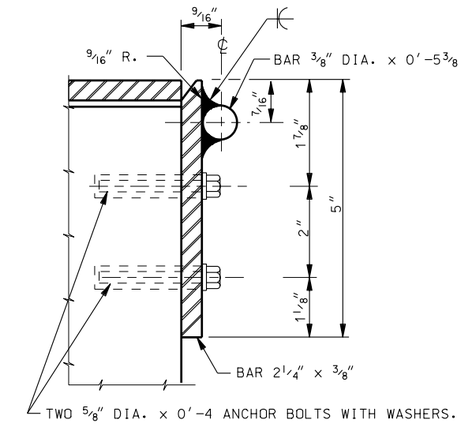

SECTION A-A

SOLID COVER TYPE "C" DETAILS

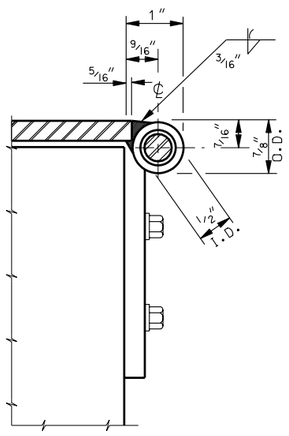

SECTION B-B

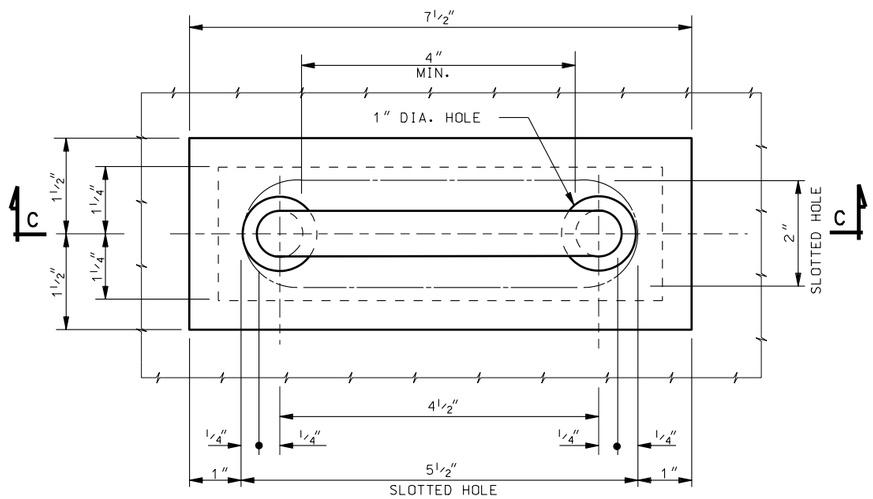

PLAN

SOLID COVER TYPE "C" SUB-FRAME TYPE III DIMENSIONS										
LINE NO.	HAND SLIDE GATE		WALL SIZE	COVER PLATE			SUB-FRAME TYPE III			
	A	B	L1	L2	L3	+	L4	L5	L6	BAR SIZE
1	12	12	2'-0	3'-0	1'-5 7/8	1/4"	—	—	—	—
2	18	18	2'-6	3'-6	1'-8 7/8	1/4"	—	—	—	—
3	24	24	3'-0	4'-0	1'-11 7/8	3/16"	1'-4 3/4	1'-5 3/4	1'-11	3 1/2 x 1/2
4	36	36	4'-4	5'-4	2'-1 7/8	3/16"	2'-0 3/4	2'-1 3/4	2'-10 1/4	3 1/2 x 1/2

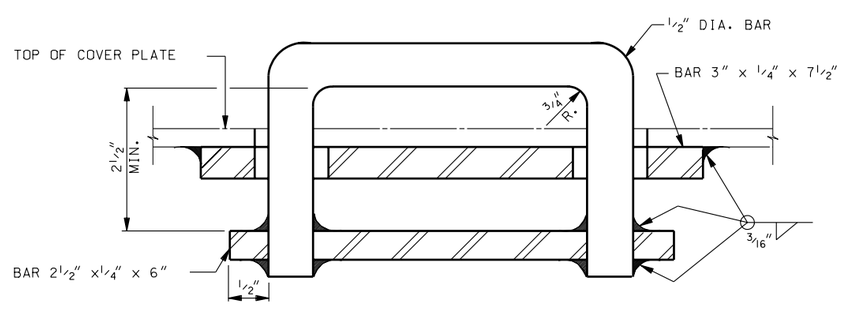

SECTION C-C
DROP HANDLE DETAIL

REQUIRE EITHER ONE DROP-DOWN HANDLE IF LOCATED IN SIDEWALK OR A SLOTTED HAND HOLE 2" x 5 1/2" FOR EACH DIVERSION BOX COVER

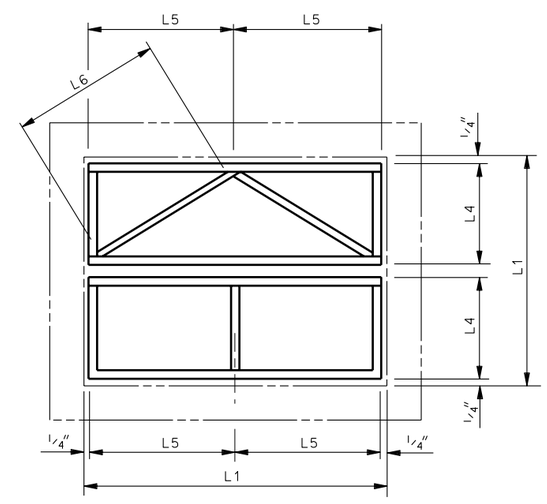

SUB-FRAME TYPE III

NO.	DATE	APPR.	REMARKS

REVISIONS

UTAH DEPARTMENT OF TRANSPORTATION
STANDARD DRAWINGS FOR ROAD AND BRIDGE CONSTRUCTION
SALT LAKE CITY, UTAH

RECOMMENDED FOR APPROVAL — JULY 03,2002 DATE

CHAIRMAN STANDARDS COMMITTEE APPROVED — JULY 03,2002 DATE

DEPUTY DIRECTOR

STANDARD DIVERSION BOX
HINGED LID
SOLID COVER
TYPE "B" & "C" DETAILS

STANDARD DRAWING TITLE

STD DWG
DB 2H

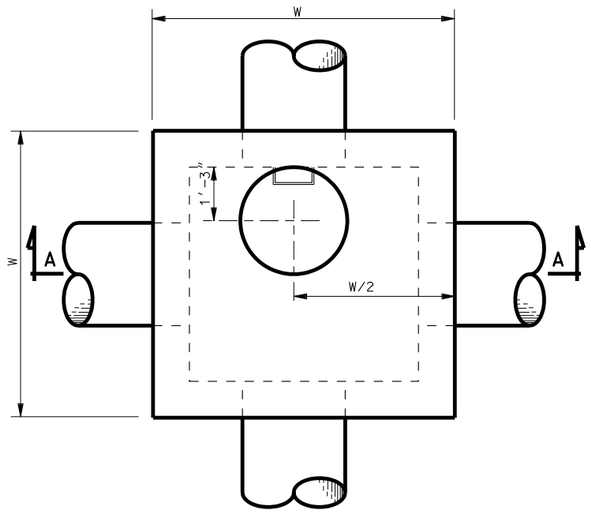

BOX PLAN

FURNISH PRECAST GRADE RINGS IN HEIGHTS OF 4 INCH, 6 INCH OR 8 INCHES TOTAL HEIGHT OF GRADE RINGS NOT TO EXCEED 1 FOOT.

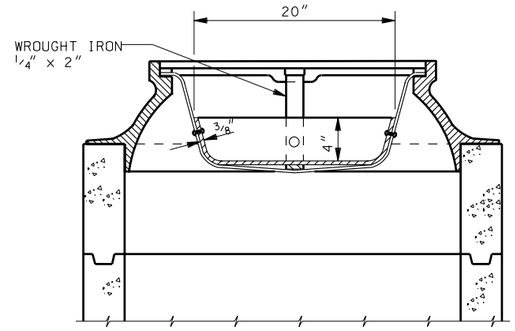

SECTION B-B

(PAN SECTION - LID REMOVED)

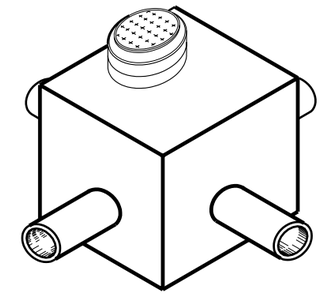

ISOMETRIC VIEW

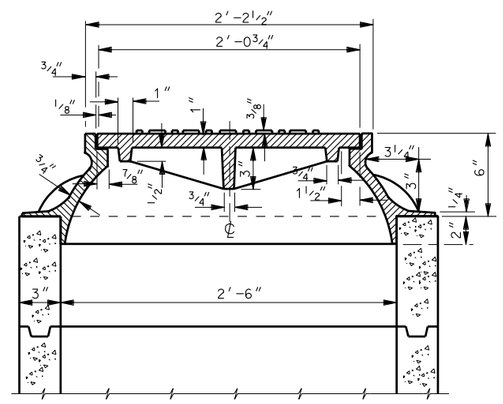

SECTION C-C

(LID SECTION - PAN REMOVED)

USE PRECAST CONCRETE GRADE RINGS TO ACHIEVE FINISH GRADE ELEVATION. INCLUDE COST IN CONTRACT PRICE FOR MANHOLE FRAME AND COVER.

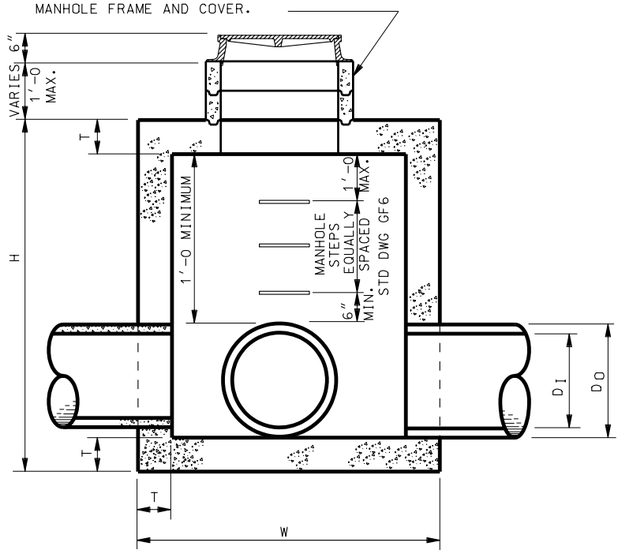

SECTION A-A

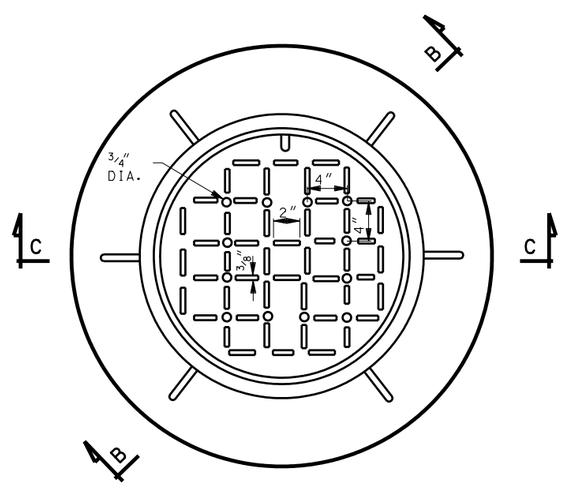

MANHOLE PLAN

GENERAL NOTES FOR DB 3A TO DB 3C

1. FOR ALL REINFORCING STEEL USE COATED DEFORMED BILLET-STEEL BARS CONFORMING TO AASHTO DESIGNATION M 284 OR M 111 AND M 31 GRADE 60.
2. FURNISH MANHOLE FRAME AND COVER IN EITHER DUCTILE IRON (ASTM A 536 GRADE 60) OR CAST GRAY IRON : AASHTO M 105, CLASS 30B.
3. CHAMFER EXPOSED CORNERS 3/4" EXCEPT WHERE NOTED OTHERWISE.
4. 2 INCHES COVER TO REINFORCING STEEL EXCEPT WHERE NOTED OTHERWISE.
5. USE CONCRETE CLASS AA(AE) FOR ALL CAST-IN-PLACE CONCRETE EXCEPT WHERE NOTED OTHERWISE.
6. USE TYPE II CEMENT (LOW ALKALI) UNLESS SPECIFIED OTHERWISE IN THE SPECIAL PROVISIONS.
7. SEE ROADWAY PLANS FOR DETAILS OF INSTALLATION, INCLUDING LOCATION OF UNITS, NUMBER OF UNITS REQUIRED, TYPE OF UNITS, LOCATION AND SIZE OF PIPE(S).
8. SEE STD DWG GF 6 FOR MANHOLE STEP DETAILS.

DESIGN DATA

MS 18 (HS 20) OR INTERSTATE ALTERNATE LOADING IN ACCORDANCE WITH CURRENT AASHTO AND INTERIM SPECIFICATIONS.

STRUCTURAL CONCRETE: fc = 1400 psi,
fs (REINF.) = 24,000 psi,
n = 8

QUANTITIES

STRUCTURAL CONCRETE
REINFORCING STEEL
— SEE SCHEDULE OF INSTALLATION

INDEX OF SHEETS

1- SITUATION AND LAYOUT
2- SCHEDULE OF INSTALLATION 0 " TO 42" RCP AND 0 " TO 54" CMP
3- SCHEDULE OF INSTALLATION 48" TO 72" RCP AND 60" TO 84" CMP

REVISIONS

NO.	DATE	APPR.	REMARKS

UTAH DEPARTMENT OF TRANSPORTATION
STANDARD DRAWINGS FOR ROAD AND BRIDGE CONSTRUCTION
SALT LAKE CITY, UTAH

RECOMMENDED FOR APPROVAL — JULY 03,2002 DATE
CHAIRMAN STANDARDS COMMITTEE APPROVED — JULY 03,2002 DATE
DEPUTY DIRECTOR

STANDARD DRAWING TITLE
STANDARD DIVERSION BOX WITH MANHOLE COVER SITUATION AND LAYOUT

STD DWG
DB 3A

SCHEDULE OF INSTALLATION

LINE	DIMENSIONS H	W	T	A	MAX. PIPE DIA. RCP	MAX. PIPE DIA. CMP	REINFORCING STEEL S1 a	S1 b	S1 L'GTH	S1 QT	W1 L'GTH	W1 QT	W2 N	W2 L'GTH	W2 QT	P1 L'GTH	P1 QT	MAN STEP QT	QUANTITIES CONC. CU. YDS.	REINF. STEEL LBS.	FRAME COVER LBS.	LINE
1	4'-0	5'-0	8"	10"	15"	18"	18"	4'-0	7'-0	12	3'-0	20	2	4'-8	20	3'-6	4	2	2.255	262.1	245	1
2	4'-4	5'-0	↑	6"	18"	21"	↑	4'-0	7'-0	↑	3'-4	↑	3	4'-8	24	↑	↑	2	2.397	288.6	↑	2
3	4'-8	5'-0		8"	24"	24"		4'-0	7'-0		3'-8		3	4'-8	24			2	2.540	295.5		3
4	5'-0	6'-0		10"	24"	30"		5'-0	8'-0		4'-0		3	5'-8	24			3	3.588	340.0		4
5	5'-4	↑		6"	27"	36"		↑	↑		4'-4		4	↑	28			3	3.764	370.6		5
6	5'-8			8"	30"	36"					4'-8		4		28			3	3.939	377.6		6
7	6'-0			10"	36"	42"					5'-0		4		28			4	4.115	384.5		7
8	6'-4			6"	36"	48"					5'-4		5		32			4	4.290	415.1		8
9	6'-8			8"	42"	48"					5'-8		5		32			4	4.466	422.1		9
10	7'-0			10"	↑	54"					6'-0		5		32			5	4.641	429.0		10
11	7'-4			6"		↑					6'-4		6		36			5	4.817	459.6		11
12	7'-8			8"							6'-8		6		36			5	4.993	466.6		12
13	8'-0			10"							7'-0		6		36			6	5.168	473.5		13
14	8'-4			6"							7'-4		7		40			6	5.344	504.1		14
15	8'-8			8"							7'-8		7		40			6	5.519	511.1		15
16	9'-0			10"							8'-0		7		40			7	5.695	518.0		16
17	9'-4			6"							8'-4		8		44			7	5.871	548.6		17
18	9'-8			8"							8'-8		8		44			7	6.046	555.6		18
19	10'-0			10"							9'-0		8		44			8	6.223	562.5		19
20	10'-4			6"							9'-4		9		48			8	6.397	593.1		20
21	10'-8			8"							9'-8		9		48			8	6.573	600.1		21
22	11'-0			10"							10'-0		9		48			9	6.748	607.0		22
23	11'-4			6"							10'-4		10		52			9	6.924	637.6		23
24	11'-8			8"							10'-8		10		52			9	7.100	644.6		24
25	12'-0			10"							11'-0		10		52			10	7.275	651.5		25
26	12'-4			6"							11'-4		11		56			10	7.451	682.1		26
27	12'-8			8"							11'-8		11		56			10	7.626	689.1		27
28	13'-0			10"							12'-0		11		56			11	7.802	696.0		28
29	13'-4			6"							12'-4		12		60			11	7.978	726.6		29
30	13'-8			8"							12'-8		12		60			11	8.153	733.6		30
31	14'-0			10"							13'-0		12		60			12	8.329	740.5		31
32	14'-4			6"							13'-4		13		64			12	8.504	771.1		32
33	14'-8			8"							13'-8		13		64			12	8.680	778.1		33
34	15'-0			10"							14'-0		13		64			13	8.855	785.0		34
35	15'-4			6"							14'-4		14		68			13	9.031	815.6		35
36	15'-8			8"							14'-8		14		68			13	9.206	822.6		36
37	16'-0			10"							15'-0		14		68			14	9.382	829.5		37
38	16'-4			6"							15'-4		15		72			14	9.558	860.1		38
39	16'-8			8"							15'-8		15		72			14	9.733	867.1		39
40	17'-0			10"							16'-0		15		72			15	9.909	874.0		40
41	17'-4			6"							16'-4		16		76			15	10.084	904.6		41
42	17'-8			8"							16'-8		16		76			15	10.260	911.6		42
43	18'-0			10"							17'-0		16		76			16	10.436	918.5		43
44	18'-4			6"							17'-4		17		80			16	10.611	949.1		44
45	18'-8			8"							17'-8		17		80			16	10.787	956.1		45
46	19'-0			10"							18'-0		17		80			17	10.962	963.0		46
47	19'-4			6"							18-4		18		84			17	11.138	993.6		47
48	19'-8			8"							18-8		18		84			17	11.314	1000.6		48
49	20'-0			10"							19'-0		18		84			18	11.489	1007.5		49
50	20'-4			6"							19'-4		19		88			18	11.665	1038.1		2'
51	20'-8			8"							19'-8		19		88			18	11.840	1045.1		51
52	21'-0			10"							20'-0		19		88			19	12.016	1052.0		52
53	21'-4			6"							20'-4		20		92			19	12.192	1082.6		53
54	21'-8			8"							20'-8		20		92			19	12.367	1089.6		54
55	22'-0			10"							21'-0		20		92			20	12.543	1096.5		55
56	22'-4			6"							21'-4		21		96			20	12.718	1127.1		56
57	22'-8			8"							21'-8		21		96			20	12.894	1134.1		57
58	23'-0			10"							22'-0		21		96			21	13.069	1141.0		58
59	23'-4			6"							22'-4		22		100			21	13.245	1171.6		59
60	23'-8			8"							22'-8		22		100			21	13.421	1178.6		60
61	24'-0			10"							23'-0		22		100			22	13.596	1185.5		61
62	24'-4			6"							23'-4		23		104			22	13.772	1216.1		62
63	24'-8	↓		8"	↓	↓	↓	↓	8'-0	↓	23'-8	↓	23	↓	104	↓	↓	22	13.947	1223.1	↓	63
64	25'-0	6'-0	8"	10"	42"	54"	18"	5'-0	8'-0	12	24'-0	20	23	5'-8	104	3'-6	4	23	14.123	1230.0	245	64

TABLE "A"

RCP DIA.	RCP CU. YDS.	CMP DIA.	CMP CU. YDS.
12"	0.037	12"	0.019
15"	0.053	15"	0.030
18"	0.071	18"	0.044
21"	0.095	21"	0.059
24"	0.121	24"	0.078
27"	0.151	30"	0.121
30"	0.184	36"	0.175
33"	0.221	42"	0.238
36"	0.261	48"	0.310
42"	0.350	54"	0.393

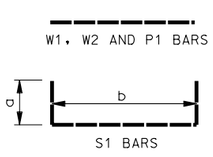

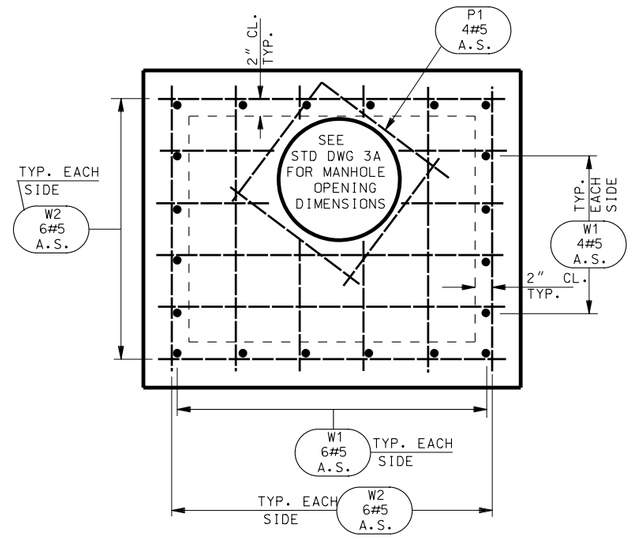

PLAN OF TOP SLAB

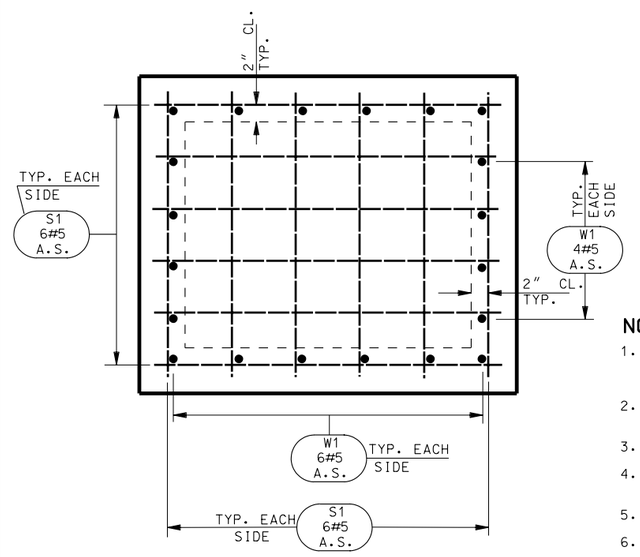

PLAN OF BOTTOM SLAB

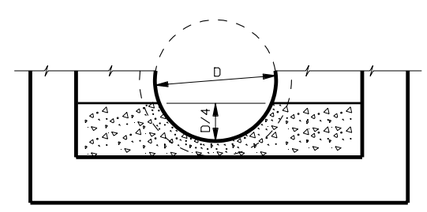

FORMED INVERT DETAIL

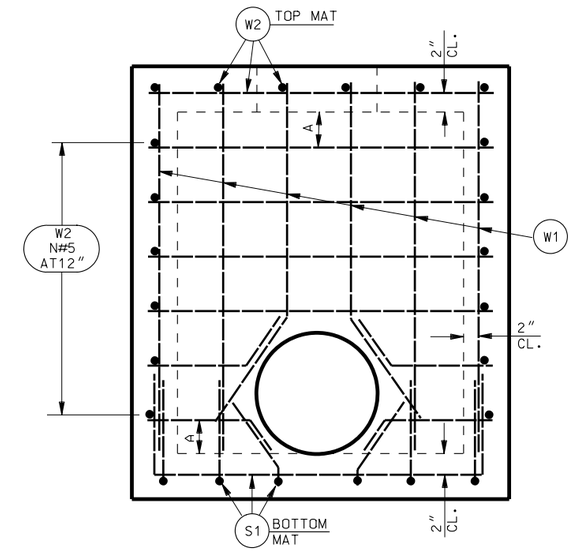

TYPICAL WALL ELEVATION

NOTES:

1. DEDUCT CONCRETE DISPLACED BY PIPE(S) FROM CONCRETE QUANTITIES SHOWN IN SCHEDULE OF INSTALLATION IN ACCORDANCE WITH TABLE "A".
2. FORM THE BOTTOM SLAB OF THE BOX TO FIT THE INVERT OF THE PIPE(S) WHEN SO REQUIRED ACCORDING TO THE DETAIL SHOWN ON THIS SHEET (FORMED INVERT).
3. QUANTITIES SHOWN IN THE SCHEDULE OF INSTALLATION ARE FOR ONE UNIT ONLY.
4. FIELD CUT OR BEND REINFORCING STEEL AS NECESSARY TO CLEAR PIPE(S) AND MAINTAIN 2" MINIMUM CLEARANCE.
5. UNLESS OTHERWISE SHOWN ALL DIMENSIONS ARE OUT-TO-OUT OF BARS.
6. WEIGHT QUANTITIES FOR MANHOLE FRAME AND COVER ARE SHOWN FOR INFORMATION ONLY.
7. SEE STD DWG DB 3A FOR DIMENSIONS. SEE STD DWG GF6 FOR MANHOLE STEP DETAILS.
8. PIPE DIAMETERS SHOWN IN TABLES AND SCHEDULES ARE INSIDE DIAMETERS.
9. ADD AN ADDITIONAL AMOUNT OF CONCRETE TO QUANTITIES SHOWN IN THE SCHEDULE OF INSTALLATION WHEN FORMED INVERT IS REQUIRED.
10. MAXIMUM PIPE DIMENSIONS SHOWN IN SCHEDULE OF INSTALLATION ARE FOR PIPES PERPENDICULAR TO WALLS OF BOX. DETERMINE CLEARANCES FOR SKEWED PIPES.

NO.	DATE	APPR.	REMARKS

REVISIONS

UTAH DEPARTMENT OF TRANSPORTATION
STANDARD DRAWINGS FOR ROAD AND BRIDGE CONSTRUCTION
SALT LAKE CITY, UTAH

RECOMMENDED FOR APPROVAL — JULY 03.2002 DATE
CHAIRMAN STANDARDS COMMITTEE APPROVED — JULY 03.2002 DATE
DEPUTY DIRECTOR

STANDARD DIVERSION BOX WITH MANHOLE COVER UP TO 42" RCP AND UP TO 54" CMP
STANDARD DRAWING TITLE

STD DWG
DB 3B

SCHEDULE OF INSTALLATION

LINE	DIMENSIONS H	W	T	A	MAX. PIPE DIA. RCP	CMP	REINFORCING STEEL S1 a	b	LGTH	QT	S2 LGTH	QT	W1 LGTH	QT	W2 N	LGTH	QT	P1 LGTH	QT	MAN STEP QT	QUANTITIES CONC. CU.YDS.	REINF. STEEL LBS.	FRAME COVER LBS.	LINE
65	8′-0	9′-0	10″	8″	48″	60″	2-0	8′-8	12′-8	20	2′-0	36	7′-0	72	6	8′-8	108	3′-6	8	5	11.234	1870.4	245	65
66	8′-4	↑	↑	10″	54″	66″	↑	↑	↑	↑		↑	7′-4	↑	6	↑	108	↑	↑	5	11.570	1895.5	↑	66
67	8′-8			6″	60″	72″							7′-8		7		116			6	11.906	1992.8		67
68	9′-0			8″	60″	72″							8′-0		7		116			6	12.242	2017.9		68
69	9′-4			10″	66″	78″							8′-4		7		116			6	12.578	2042.9		69
70	9′-8			6″	66″	84″							8′-8		8		124			7	12.914	2140.2		70
71	10′-0			8″	72″	↑							9′-0		8		124			7	13.250	2165.3		71
72	10′-4			10″	↑								9′-4		8		124			7	13.586	2190.3		72
73	10′-8			6″									9′-8		9		132			8	13.922	2287.6		73
74	11′-0			8″									10′-0		9		132			8	14.258	2312.7		74
75	11′-4			10″									10′-4		9		132			8	14.594	2337.7		75
76	11′-8			6″									10′-8		10		140			9	14.931	2435.1		76
77	12′-0			8″									11′-0		10		140			9	15.266	2460.1		77
78	12′-4			10″									11′-4		10		140			9	15.602	2485.1		78
79	12′-8			6″									11′-8		11		148			10	15.938	2582.5		79
80	13′-0			8″									12′-0		11		148			10	16.274	2607.5		80
81	13′-4			10″									12′-4		11		148			10	16.610	2632.5		81
82	13′-8			6″									12′-8		12		156			11	16.946	2729.9		82
83	14′-0			8″									13′-0		12		156			11	17.282	2754.9		83
84	14′-4			10″									13′-4		12		156			11	17.618	2779.9		84
85	14′-8			6″									13′-8		13		164			12	17.954	2877.3		85
86	15′-0			8″									14′-0		13		164			12	18.290	2902.3		86
87	15′-4			10″									14′-4		13		164			12	18.626	2927.3		87
88	15′-8			6″									14′-8		14		172			13	18.962	3024.7		88
89	16′-0			8″									15′-0		14		172			13	19.298	3049.7		89
90	16′-4			10″									15′-4		14		172			13	19.634	3074.7		90
91	16′-8			6″									15′-8		15		180			14	19.970	3172.1		91
92	17′-0			8″									16′-0		15		180			14	20.306	3197.1		92
93	17′-4			10″									16′-4		15		180			14	20.642	3222.1		93
94	17′-8			6″									16′-8		16		188			15	20.978	3319.5		94
95	18′-0			8″									17′-0		16		188			15	21.314	3344.5		95
96	18′-4			10″									17′-4		16		188			15	21.650	3369.5		96
97	18′-8			6″									17′-8		17		196			16	21.986	3466.9		97
98	19′-0			8″									18′-0		17		196			16	22.322	3491.9		98
99	19′-4			10″									18′-4		17		196			16	22.658	3516.9		99
100	19′-8			6″									18′-8		18		204			17	22.994	3614.3		100
101	20′-0			8″									19′-0		18		204			17	23.330	3639.3		101
102	20′-4			10″									19′-4		18		204			17	23.666	3664.3		102
103	20′-8			6″									19′-8		19		212			18	24.002	3761.7		103
104	21′-0			8″									20′-0		19		212			18	24.338	3786.7		104
105	21′-4			10″									20′-4		19		212			18	24.674	3811.7		105
106	21′-8			6″									20′-8		20		220			19	25.010	3909.1		106
107	22′-0			8″									21′-0		20		220			19	25.346	3934.1		107
108	22′-4			10″									21′-4		20		220			19	25.682	3959.1		108
109	22′-8			6″									21′-8		21		228			20	26.018	4056.5		109
110	23′-0			8″									22′-0		21		228			20	26.354	4081.5		110
111	23′-4			10″									22′-4		21		228			20	26.690	4106.5		111
112	23′-8			6″									22′-8		22		236			21	27.026	4203.9		112
113	24′-0			8″									23′-0		22		236			21	27.362	4228.9		113
114	24′-4			10″									23′-4		22		236			21	27.698	4253.9		114
115	24′-8			6″									23′-8		23		244			22	28.034	4351.3		115
116	25′-0			8″									24′-0		23		244			22	28.370	4376.3		116
117	25′-4			10″									24′-4		23		244			22	28.706	4401.3		117
118	25′-8			6″									24′-8		24		252			23	29.042	4498.7		118
119	26′-0			8″									25′-0		24		252			23	29.378	4523.7		119
120	26′-4			10″									25′-4		24		252			23	29.714	4548.7		120
121	26′-8			6″									25′-8		25		260			24	30.050	4646.1		121
122	27′-0			8″									26′-0		25		260			24	30.386	4671.1		122
123	27′-4			10″									26′-4		25		260			24	30.722	4696.1		123
124	27′-8			6″									26′-8		26		268			25	31.058	4793.5		124
125	28′-0			8″									27′-0		26		268			25	31.394	4818.5		125
126	28′-4			10″									27′-4		26		268			25	31.730	4843.5		126
127	28′-8	↓	↓	6″	↓	↓	↓	↓	↓	↓		↓	27′-8	↓	27	↓	276	↓	↓	26	32.066	4940.9	↓	127
128	29′-0	9′-0	10″	8″	72″	84″	2′-0	8′-8	12′-8	20	2′-0	36	28′-0	72	27	8′-8	276	3′-6	8	26	32.402	4965.9	245	128

TABLE "A"			
RCP		CMP	
DIA.	CU.YDS.	DIA.	CU.YDS.
48″	0.566	60″	0.606
54″	0.711	66″	0.733
60″	0.873	72″	0.873
66″	1.051	78″	1.024
72″	1.245	84″	1.188

S2, W1, W2 AND P1 BARS

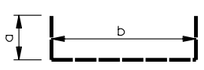

S1 BARS

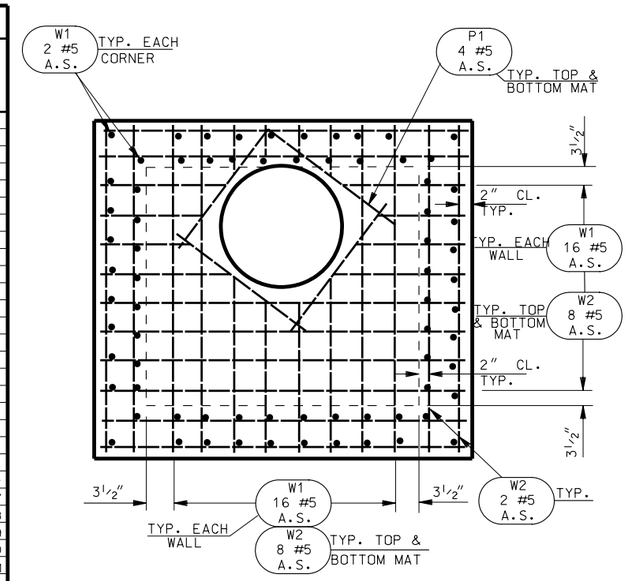

PLAN OF TOP SLAB

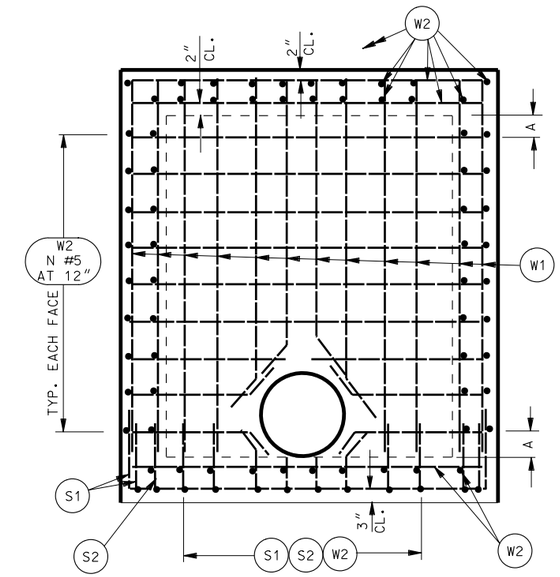

TYPICAL WALL ELEVATION

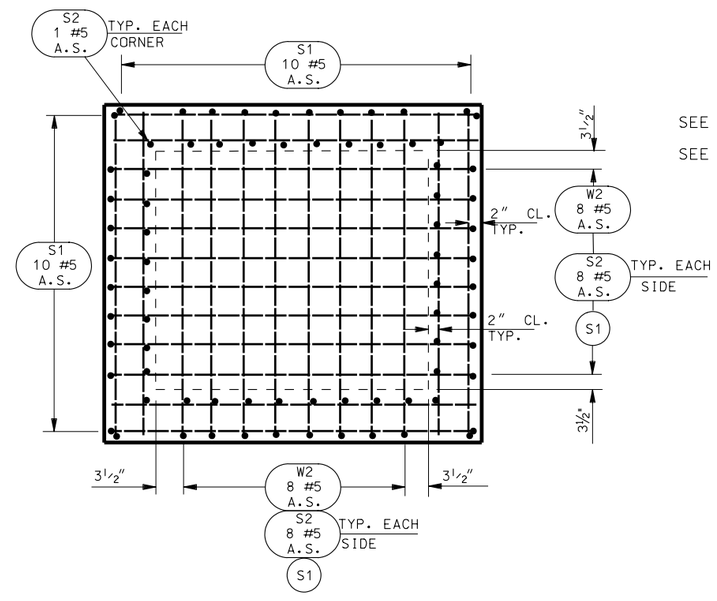

PLAN OF BOTTOM SLAB

SEE STD DWG DB 3A FOR MANHOLE OPENING DIMENSIONS.

SEE STD DWG DB 3B FOR NOTES.

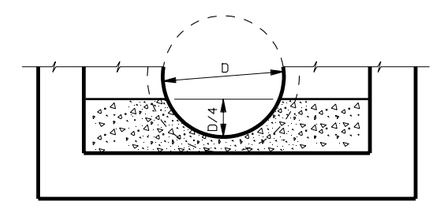

FORMED INVERT DETAIL

NO.	DATE	APPR.	REMARKS

REVISIONS

UTAH DEPARTMENT OF TRANSPORTATION
STANDARD DRAWINGS FOR ROAD AND BRIDGE CONSTRUCTION
SALT LAKE CITY, UTAH

RECOMMENDED FOR APPROVAL — JULY 03,2002 DATE

CHAIRMAN STANDARDS COMMITTEE APPROVED — JULY 03,2002 DATE

DEPUTY DIRECTOR

STANDARD DIVERSION BOX WITH MANHOLE COVER 48" TO 72" RCP AND 60" TO 84" CMP

STANDARD DRAWING TITLE

STD DWG DB 3C

CORRUGATED STEEL PIPE ARCHES
2 2/3" x 1/2" CORRUGATIONS

PIPE DIM. SPAN X RISE inch	CORNER RADIUS inch	MIN. COVER ft.	MIN. THICKNESS inch	MAX. FILL HEIGHT ft.
17 x 13	3	18	0.064	11
21 x 15	3	18	0.064	9
24 x 18	3	24	0.064	7
28 x 20	3	24	0.064	5
35 x 24	4	30	0.064	6
42 x 29	4 1/2	30	0.064	5
49 x 33	5 1/2	30	0.079	5
57 x 38	6 1/2	30	0.109	6
64 x 43	7	30	0.109	5
71 x 47	8	24	0.138	5
77 x 52	8 1/2	24	0.168	5
83 x 57	9	24	0.168	5

SEE NOTE 1

CORRUGATED STEEL PIPE ARCHES
6" x 2" CORRUGATIONS
BOLTED FABRICATION 4 BOLTS/FT 3/4" DIA.

PIPE DIM. SPAN X RISE ft-inch	CORNER RADIUS inch	MIN. COVER ft.	MIN. THICKNESS inch	MAX. FILL HEIGHT ft.
6-1 x 4-7	18	18	0.109	16
7-0 x 5-1	18	18	0.109	14
7-11 x 5-7	18	18	0.109	12
8-10 x 6-1	18	24	0.109	11
9-9 x 6-7	18	24	0.109	10
10-11 x 7-1	18	24	0.109	8
11-10 x 7-7	18	24	0.109	7
12-10 x 7-7	18	24	0.109	6
14-1 x 8-4	18	30	0.109	5
15-4 x 9-3	21	24	0.138	6
15-10 x 9-10	21	24	0.138	5
16-7 x 10-9	21	24	0.138	4
13-3 x 9-4	31	24	0.109	12
14-3 x 9-10	31	24	0.109	11
15-4 x 10-4	31	24	0.138	10
16-3 x 10-10	31	24	0.138	9
17-2 x 11-4	31	30	0.138	9
18-1 x 11-10	31	30	0.168	8
19-3 x 12-4	31	30	0.168	7
19-11 x 12-10	31	30	0.168	7
20-7 x 13-10	31	36	0.188	7

ROUND CORRUGATED STEEL PIPE
3" x 1" CORRUGATIONS

THICKNESS	0.064		0.079		0.109		0.138		0.168	
PIPE DIAMETER inch	MIN. COVER inch	MAX. FILL ft.	MIN. COVER inch	MAX. FILL ft.	MIN. COVER inch	MAX. FILL ft.	MIN. COVER inch	MAX. FILL ft.	MIN. COVER inch	MAX. FILL ft.
36	12	81	12	102	12	143	12	184	12	225
42	12	70	12	87	12	122	12	157	12	193
48	12	61	12	76	12	107	12	138	12	159
54	12	54	12	68	12	95	12	122	12	150
60	12	49	12	61	12	85	12	110	12	135
66	13	44	12	55	12	78	12	100	12	122
72	15	40	13	51	12	71	12	92	12	112
78	16	37	14	47	12	66	12	85	12	104
84	17	35	15	43	13	61	12	78	12	96
90	18	32	16	40	14	57	12	73	12	90
96			17	38	15	53	13	69	12	84
102			18	36	15	50	14	65	13	79
108					16	47	14	61	14	75
114					17	45	15	58	15	71
120					18	42	16	55	15	67
126							17	52	16	64
132							17	50	17	61
138							18	48	18	58
144									18	56

SEE NOTE 1

ROUND CORRUGATED STEEL STRUCTURAL PLATE PIPE
6" x 2" CORRUGATIONS
BOLTED FABRICATION 4 BOLTS/FT 3/4" DIA. THICKNESS

THICKNESS		0.109	0.138	0.168	0.186	0.218	0.249	0.280
PIPE DIAMETER inch	MIN. COVER inch	MAX. FILL ft.	MAX. FILL ft.	MAX. FILL ft.	MAX. FILL ft.	MAX. FILL ft.	MAX. FILL ft.	MAX. FILL ft.
60	12	46	68	90	103	124	146	160
66	12	42	62	81	93	113	133	145
72	12	38	57	75	86	103	122	135
78	12	35	52	69	79	95	112	123
84	12	33	49	64	73	88	104	114
90	12	31	45	60	68	82	97	106
96	12	29	43	56	64	77	91	100
102	13	27	40	52	60	73	86	94
108	14	25	38	50	57	69	81	88
114	15	24	36	47	54	65	77	84
120	15	23	34	45	51	62	73	80
126	16	22	32	42	49	59	69	76
132	17	21	31	40	46	56	66	72
138	18	20	29	39	44	54	63	69
144	18	19	28	37	43	51	61	66
150	19	18	27	36	41	49	58	64
156	20	17	26	34	39	47	56	61
162	21	17	25	33	38	46	54	59
168	21	16	24	32	36	44	52	57
174	22	16	23	31	35	42	50	55
180	23	15	22	30	34	41	48	53
186	24	15	22	29	33	40	47	51
192	24		21	28	32	38	45	50
198	25		20	27	31	37	44	48
204	26		20	26	30	36	43	47
210	27		19	25	29	35	42	45
216	27			25	28	34	41	44
222	28			24	27	33	40	43
228	29			23	27	32	39	42
234	30			23	26	31	38	41
240	30				25	31	37	40
246	31				25	30	36	39
252	32					29	35	38
258	33					28	34	37
264	33					28	34	36
270	34					27	33	35
276	35						32	34
282	36						32	34
288	36						31	33
294	37							32
300	38							32
306	39							31

ROUND CORRUGATED STEEL PIPE
2 2/3" x 1/2" CORRUGATIONS

THICKNESS	0.064		0.079		0.109		0.138		0.168	
PIPE DIAMETER inch	MIN. COVER inch	MAX. FILL ft.	MIN. COVER inch	MAX. FILL ft.	MIN. COVER inch	MAX. FILL ft.	MIN. COVER inch	MAX. FILL ft.	MIN. COVER inch	MAX. FILL ft.
12	12	213	12	266	12	372	12	479	12	586
15	12	170	12	212	12	298	12	383	12	469
18	12	142	12	177	12	248	12	319	12	391
21	12	121	12	152	12	213	12	274	12	335
24	12	106	12	133	12	186	12	239	12	293
27	12	94	12	118	12	165	12	213	12	260
30	12	85	12	106	12	149	12	191	12	234
36	12	71	12	88	12	124	12	159	12	195
42	12	60	12	76	12	106	12	137	12	167
48	12	53	12	66	12	93	12	119	12	146
54			12	59	12	82	12	106	12	130
60					12	74	12	95	12	117
66							13	87	12	106
72							14	79	13	97
78									14	86
84									15	75

SEE NOTE 1

ROUND CORRUGATED STEEL PIPE
3/4" x 1" SPIRAL RIB PIPE

THICKNESS	0.064		0.079		0.109	
PIPE DIAMETER inch	MIN. COVER inch	MAX. FILL ft.	MIN. COVER inch	MAX. FILL ft.	MIN. COVER inch	MAX. FILL ft.
24	12	56	12	70	12	99
30	12	45	12	56	12	79
36	12	37	12	47	12	66
42	12	32	12	40	12	56
48	12	28	12	35	12	49
54		25	15	31	15	44
60		22	15	28	15	39
66			18	25	18	36
72			18	23	18	33
78					21	30
84					21	28

CORRUGATED STEEL PIPE ARCHES
3" x 1" OR 5" x 1" CORRUGATIONS

PIPE DIM. SPAN X RISE inch	CORNER RADIUS inch	MIN. COVER inch	MIN. THICKNESS inch	MAX. FILL HEIGHT ft.
53 x 41	7	24	0.109	7
60 x 46	8	24	0.109	7
66 x 51	9	18	0.109	9
73 x 55	12	18	0.109	10
81 x 59	14	18	0.109	11
87 x 63	14	18	0.109	10
95 x 67	16	18	0.109	11
103 x 71	16	24	0.109	10
112 x 75	18	24	0.109	10
117 x 79	18	24	0.109	10
128 x 83	18	24	0.138	8
137 x 87	18	24	0.138	7
142 x 91	18	24	0.168	7

SEE NOTE 1

ROUND CORRUGATED STEEL PIPE
5" x 1" CORRUGATIONS

THICKNESS	0.064		0.079		0.109		0.138		0.168	
PIPE DIAMETER inch	MIN. COVER inch	MAX. FILL ft.	MIN. COVER inch	MAX. FILL ft.	MIN. COVER inch	MAX. FILL ft.	MIN. COVER inch	MAX. FILL ft.	MIN. COVER inch	MAX. FILL ft.
36	12	72	12	90	12	127	12	163	12	200
42	12	62	12	77	12	109	12	140	12	171
48	12	54	12	68	12	95	12	122	12	150
54	12	48	12	60	12	84	12	109	12	133
60	12	43	12	54	12	76	12	98	12	120
66	13	39	12	49	12	69	12	89	12	109
72	14	36	13	45	12	63	12	81	12	100
78	16	33	14	41	12	58	12	75	12	92
84	17	31	15	38	13	54	12	70	12	85
90	18	29	16	36	14	50	12	65	12	80
96			17	34	15	47	13	61	12	75
102			18	32	15	44	14	57	13	70
108					16	42	14	54	14	66
114					17	40	15	51	15	63
120					18	38	16	49	15	60
126							17	46	16	57
132							17	44	17	54
138							18	42	18	52
144									18	50

SEE NOTE 1

NOTE 1: TABLE IS FOR PIPE WITH HELICAL LOCK SEAMS OR HELICAL WELDED SEAMS ONLY.

STRUCTURAL STEEL UNDERPASS
6" x 2" CORRUGATIONS

PIPE DIM. SPAN X RISE ft-inch	CORNER RADIUS inch	MIN. COVER inch	MIN. THICKNESS inch	MAX. FILL HEIGHT ft.
12-2 x 11-0	38	24	0.111	11
13-2 x 11-11	38	24	0.111	10
14-1 x 12-10	38	24	0.111	10
14-10x 13-5	38	24	0.111	10
15-9 x 15-1	38	24	0.111	7
16-5 x 16-1	38	24	0.140	7
17-3 x 17-0	47	36	0.140	9
19-2 x 17-2	47	36	0.170	7
20-4 x 17-9	47	36	0.188	6

REVISIONS

NO.	DATE	APPR.	REMARKS

UTAH DEPARTMENT OF TRANSPORTATION
STANDARD DRAWINGS FOR ROAD AND BRIDGE CONSTRUCTION
SALT LAKE CITY, UTAH

RECOMMENDED FOR APPROVAL — JULY 03,2002 DATE
CHAIRMAN STANDARDS COMMITTEE APPROVED — JULY 03,2002 DATE
DEPUTY DIRECTOR

STANDARD DRAWING TITLE
FILL HEIGHT FOR METAL PIPE (STEEL)

STD DWG
DG 1

CORRUGATED ALUMINUM PIPE ARCHES
9 in x 2½ in CORRUGATIONS
BOLTED FABRICATION

PIPE DIM. SPAN x RISE ft-inch	CORNER RADIUS inch	MIN. COVER inch	MIN. THICKNESS inch	MAX FILL HEIGHT ft.
5-11x 5-5	31.8	13	0.100	24
6-6 x 5-9	31.8	14	0.100	22
7-3 x 6-0	31.8	15	0.100	20
7-11x 6-4	31.8	17	0.100	18
8-7 x 6-7	31.8	18	0.100	17
9-3 x 6-10	31.8	19	0.100	15
10-1 x 7-1	31.8	21	0.100	14
10-8 x 7-5	31.8	22	0.100	13
11-6 x 7-8	31.8	24	0.100	12
12-1 x 7-11	31.8	22	0.125	14
12-10x 8-3	31.8	24	0.150	13
13-7 x 8-6	31.8	23	0.150	12
13-11x 9-5	31.8	24	0.150	12
14-8 x 9-8	31.8	23	0.175	11
15-4 x10-0	31.8	24	0.175	10
16-1 x10-4	31.8	24	0.200	10
16-9 x10-8	31.8	26	0.200	9
17-3 x11-0	31.8	27	0.225	9
18-0 x11-4	31.8	27	0.225	9
18-8 x11-8	31.8	28	0.250	8

USE 5 1/3 BOLTS/FOOT- ¾" DIA STEEL OR ALUMINUM

ROUND CORRUGATED ALUMINUM PIPE
3 in x 1 in CORRUGATIONS

THICKNESS	0.060		0.075		0.105		0.135		0.164	
PIPE DIAMETER inch	MIN. COVER inch	MAX. FILL ft.	MIN. COVER inch	MAX. FILL ft.	MIN. COVER inch	MAX. FILL ft.	MIN. COVER inch	MAX. FILL ft.	MIN. COVER inch	MAX. FILL ft.
36	12	59	12	74	12	101	12	133	12	163
42	12	50	12	63	12	89	12	114	12	140
48	12	44	12	55	12	78	12	100	12	122
54	14	39	14	49	14	69	12	89	12	109
60	15	35	15	44	15	62	14	80	12	98
66	17	32	17	40	17	56	15	73	13	89
72	18	29	18	37	18	52	16	66	15	81
78			20	34	20	43	18	61	16	75
84					21	42	19	57	17	70
90					23	41	20	53	18	65
96					24	38	22	49	19	60
102							23	44	21	54
108							24	40	22	49
114									23	44
120									24	40

SEE NOTE 1

ROUND CORRUGATED ALUMINUM STRUCTURAL PLATE PIPE
9 in x 2½ in CORRUGATIONS
BOLTED FABRICATION 5 1/3 BOLTS/FOOT ¾ in DIA.

THICKNESS	0.100		0.125		0.150		0.175		0.200		0.225		0.250	
PIPE DIAMETER (in)	MIN. COVER inch	MAX. FILL ft.	MIN. COVER inch	MAX. FILL ft.	MIN. COVER inch	MAX. FILL ft.	MIN. COVER inch	MAX. FILL ft.	MIN. COVER inch	MAX. FILL ft.	MIN. COVER inch	MAX. FILL ft.	MIN. COVER inch	MAX. FILL ft.
60	12	29 31	12	38 45	12	49 60	12	58 70	12	58 81	12	58 92	12	58 103
66	12	26 28	12	35 41	12	44 54	12	53 64	12	53 74	12	53 84	12	53 94
72	13	24 25	12	32 37	12	41 50	12	48 58	12	48 67	12	48 77	12	48 86
78	14	22 23	12	29 35	12	37 46	12	45 54	12	45 62	12	45 71	12	45 79
84	15	20 22	13	27 32	12	35 42	12	41 50	12	41 58	12	41 66	12	41 73
90	16	19 20	14	25 30	13	32 40	12	39 47	12	39 54	12	39 61	12	39 68
96	17	18 19	15	24 28	14	30 37	13	36 44	12	36 50	12	36 57	12	36 64
102	18	17 18	16	22 26	15	29 35	14	34 41	13	34 47	13	34 54	13	34 60
108	19	16 17	17	21 25	16	27 33	14	32 39	14	32 45	14	32 51	14	32 57
114	20	15 16	18	20 23	16	25 31	15	30 37	15	30 42	15	30 48	15	30 54
120	21	14 15	19	19 22	17	24 30	16	29 35	15	29 40	15	29 46	15	29 51
126	22	13 14	20	18 21	18	23 28	17	27 33	16	27 38	16	27 44	16	27 49
132	23	13 14	21	17 20	19	22 27	18	26 32	17	26 37	17	26 42	17	26 47
138	24	12 13	22	16 19	20	21 26	18	25 30	18	25 35	18	25 40	18	25 44
144	25	12 12	22	16 18	21	20 25	19	24 29	18	24 33	18	24 38	18	24 43
150			23	15 18	21	19 24	20	23 28	19	23 32	19	23 36	19	23 41
156				14 17	22	18 23	21	22 27	20	22 31	20	22 35	20	22 39
162					23	18 22	21	21 26	21	21 30	21	21 34	21	21 38
168					24	17 21	22	20 25	21	20 29	21	20 33	21	20 36
174					25	17 20	23	20 24	22	20 28	22	20 31	22	20 35
180							24	19 23	23	19 27	23	19 30	23	19 34
186							25	18 22	24	18 26	24	18 29	24	18 33
192									24	18 25	24	18 28	24	18 32
198									25	17 24	25	17 28	25	17 31
204									26	17 23	26	17 27	26	17 30
210											27	16 26	27	16 29
216											27	16 25	27	16 28
222													28	15 27
228													29	15 27

39 — UPPER FIGURE FOR PIPE WITH ALUMINUM BOLTS
47 — LOWER FIGURE FOR PIPE WITH STEEL BOLTS

ROUND CORRUGATED ALUMINUM PIPE
6 in x 1 in CORRUGATIONS

THICKNESS	0.060		0.075		0.105		0.135		0.164	
PIPE DIAMETER inch	MIN. COVER inch	MAX. FILL ft.	MIN. COVER inch	MAX. FILL ft.	MIN. COVER inch	MAX. FILL ft.	MIN. COVER inch	MAX. FILL ft.	MIN. COVER inch	MAX. FILL ft.
30	12	62	12	77	12	108	12	139	12	170
36	12	51	12	64	12	90	12	116	12	142
42	12	44	12	55	12	77	12	99	12	121
48	12	38	12	48	12	67	12	87	12	106
54	14	34	14	43	14	60	13	77	12	94
60	15	31	15	38	15	54	14	69	13	85
66	17	28	17	35	17	49	15	63	14	77
72	18	25	18	32	18	45	17	58	15	71
78			20	29	20	41	18	53	16	65
84					21	38	19	49	17	60
90							21	46	19	56
96							22	43	20	53
102							23	40	21	49
108									22	44
114									24	40

SEE NOTE 1

ROUND CORRUGATED ALUMINUM PIPE
2 2/3 in x ½ in CORRUGATIONS

THICKNESS	0.060		0.075		0.105		0.135		0.164	
PIPE DIAMETER inch	MIN. COVER inch	MAX. FILL ft.	MIN. COVER inch	MAX. FILL ft.	MIN. COVER inch	MAX. FILL ft.	MIN. COVER inch	MAX. FILL ft.	MIN. COVER inch	MAX. FILL ft.
12	12	155	12	193	12	271	12	348	12	426
15	12	124	12	154	12	216	12	279	12	340
18	12	103	12	129	12	180	12	232	12	284
21	12	88	12	110	12	154	12	199	12	243
24	12	77	12	96	12	135	12	174	12	213
27	12	68	12	86	12	120	12	155	12	189
30	12	62	12	77	12	108	12	139	12	170
36	12	51	12	64	12	90	12	116	12	142
42	12	44	12	55	12	77	12	99	12	121
48					12	66	12	86	12	106
54					14	54	14	70	14	87
60							15	57	15	71
66									16	57
72									18	45

SEE NOTE 1

CORRUGATED ALUMINUM PIPE ARCHES
2 2/3 in x ½" in CORRUGATIONS

PIPE DIM. SPAN x RISE inch	CORNER RADIUS inch	MIN. COVER inch	MIN. THICKNESS inch	MAX FILL HEIGHT ft.
17 x 13	3		0.060	11
21 x 15	3	18	0.060	9
24 x 18	3	24	0.060	7
28 x 20	3	24	0.060	5
35 x 24	4	30	0.060	6
42 x 29	4½	30	0.060	5
49 x 33	5½	30	0.075	5
57 x 38	6½	30	0.135	6
64 x 43	7	30	0.135	5
71 x 47	8	24	0.164	5

SEE NOTE 1

CORRUGATED ALUMINUM PIPE ARCHES
3 in x 1in CORRUGATIONS

PIPE DIM. SPAN x RISE inch	CORNER RADIUS inch	MIN. COVER inch	MIN. THICKNESS inch	MAX FILL HEIGHT ft.
53 x 41	7	24	0.105	7
60 x 46	8	24	0.105	7
66 x 51	9	18	0.105	9
73 x 55	12	18	0.105	10
81 x 59	14	18	0.105	11
87 x 63	14	18	0.105	10
95 x 67	16	18	0.105	11
105 x 71	16	24	0.135	10
112 x 75	18	24	0.135	10
117 x 79	18	24	0.164	10

FOR 0.105 THRU 0.164 in THICKNESSES
USE ½ in DIA BOLTS
SEE NOTE 1

NOTE 1:TABLE IS FOR PIPE WITH HELICAL LOCK SEAMS OR HELICAL WELDED SEAMS ONLY.

ROUND CORRUGATED ALUMINUM PIPE
¾ in x ¾ in x 7½ in CORRUGATIONS
SPIRAL RIB PIPE

THICKNESS	0.060		0.075		0.105		0.135	
PIPE DIAMETER inch	MIN. COVER inch	MAX. FILL ft.	MIN. COVER inch	MAX. FILL ft.	MIN. COVER inch	MAX. FILL ft.	MIN. COVER inch	MAX. FILL ft.
18	12	55	12	76				
21	12	47	12	65	12	105		
24	12	41	12	57	12	92		
30	15	33	12	45	12	73		
36	18	27	15	38	12	61	12	86
42			18	32	15	52	12	74
48					18	46	15	65
54					21	40	15	57
60					24	36	18	52
66							21	47
72							24	43

FOR HEAVY CONSTRUCTION LOADS (100 KIPS AXLE LOAD) AT LEAST FOUR FEET OF COMPACTED MATERIAL IS NEEDED OVER THE TOP OF THE PIPE.

REVISIONS

NO.	DATE	APPR.	REMARKS

UTAH DEPARTMENT OF TRANSPORTATION
STANDARD DRAWINGS FOR ROAD AND BRIDGE CONSTRUCTION
SALT LAKE CITY, UTAH

RECOMMENDED FOR APPROVAL — JULY 03,2002 DATE
CHAIRMAN STANDARDS COMMITTEE APPROVED — JULY 03,2002 DATE
DEPUTY DIRECTOR

FILL HEIGHT FOR METAL PIPE (ALUMINUM)
STANDARD DRAWING TITLE

STD DWG
DG 2

HIGH DENSITY POLYETHYLENE END SECTION (HDPE)

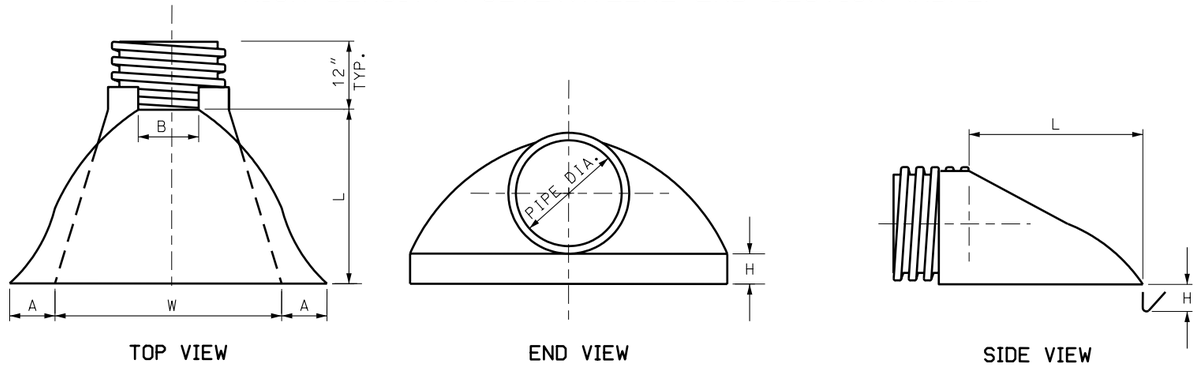

TABLE 1: HDPE AND PVC PIPES END SECTIN

PIPE DIAMETER inch	DIMENSIONS IN INCHES				
	A(1±)	B MAX	H(1±)	L(1/2±)	W(2±)
18	7.5	15	6.5	32	35
24	7.5	18	6.5	36	45
30	10.5	N/A	7.0	53	68
36	10.5	N/A	7.0	53	68

NOTES:

1. IN ORDER TO ASSURE PROPER FIT WITH 30" AND 36" THESE END SECTIONS ARE ATTACHED BY WELDING TO A SHORT STUB OF 30" OR 36" PIPE AND REQUIRE A STANDARD CONNECTING BAND TO MAKE THE ATTACHMENT.
2. DO NOT USE THESE CULVERT AND SECTIONS WITHIN THE CLEAR ZONE.
3. MAXIMUM FILL HEIGHT MEASURED FROM TOP OF PIPE TO TOP OF PAVEMENT SURFACE AT HIGHEST FILL SECTION.

TABLE 2: MAXIMUM FILL HEIGHT (SEE NOTE NO. 3)

PIPE SIZE DIA. inch	PIPE TYPE								
	HIGH DENSITY POLYETHYLENE CORRUGATED (HDPE)	HIGH DENSITY POLYETHYLENE RIBBED SMOOTH LINED (HDPE)	SMOOTH WALL (SOLID) WALL THICKNESS inches					POLYVINYL CHLORIDE (PVC)	CORRUGATED POLYETHYLENE (AASHTO M 294)
			0.6	0.85	0.92	1.15	1.38		
	MAX.FILL HEIGHT ft.								
12									30
15									30
18	30	24		46				24	30
24	30	24			34			25	30
30	30	24				34		23	30
36	30	24					34	22	30
42									
48									

REVISIONS

NO.	DATE	APPR.	REMARKS

UTAH DEPARTMENT OF TRANSPORTATION
STANDARD DRAWINGS FOR ROAD AND BRIDGE CONSTRUCTION
SALT LAKE CITY, UTAH

RECOMMENDED FOR APPROVAL — JULY 03,2002 DATE

CHAIRMAN STANDARDS COMMITTEE APPROVED — JULY 03,2002 DATE

DEPUTY DIRECTOR

MAXIMUM FILL HEIGHT AND END SECTIONS FOR HDPE AND PVC PIPES

STANDARD DRAWING TITLE

STD DWG
DG 3

PIPE CULVERT MINIMUM COVER

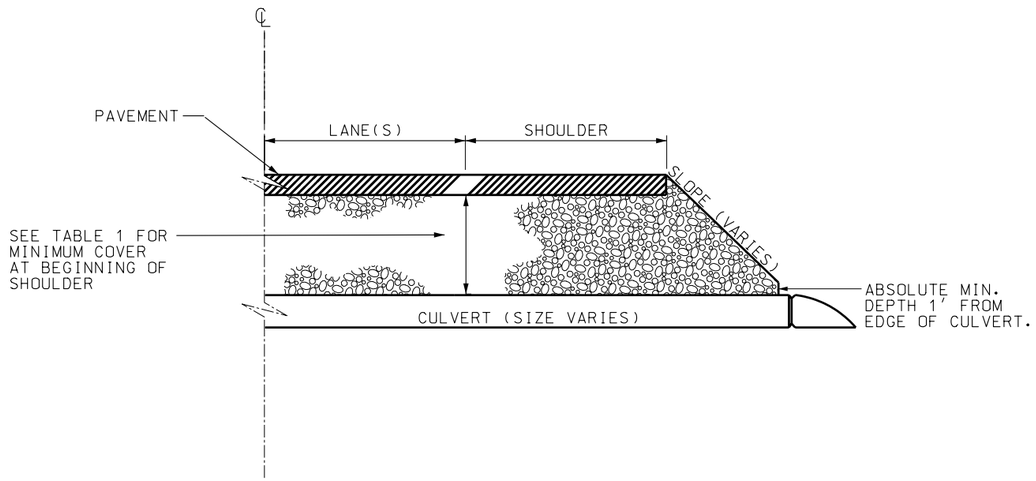

NOTES:

1. UNIFORMLY GRADE THE GROUND AROUND PIPE
2. PLASTIC PIPE INCLUDES POLYETHYLENE AND POLYVINYL CHLORIDE,

TABLE 1: PIPE CULVERTS MINIMUM COVER

SURFACE TYPE	CORRUGATED METAL PIPES AND PIPE ARCHES	STRUCTURAL PLATE PIPES AND PIPE ARCHES	REINFORCED CONCRETE PIPES	PLASTIC PIPES (SEE NOTE 2)
FLEXIBLE PAVEMENTS OR UNPAVED	1/5 (DIA. OR SPAN) OR 2' MIN.	1/8 (DIA. OR SPAN) OR 2' MIN.	2' MIN.	2' MIN.
RIGID PAVEMENTS	1/5 (DIA. OR SPAN) OR 1'6"MIN.	1/8 (DIA. OR SPAN) OR 1'6" MIN.	1'6" MIN.	2' MIN.

NOTE: DRAWING NOT TO SCALE

REVISIONS

NO.	DATE	APPR.	REMARKS

UTAH DEPARTMENT OF TRANSPORTATION
STANDARD DRAWINGS FOR ROAD AND BRIDGE CONSTRUCTION
SALT LAKE CITY, UTAH

RECOMMENDED FOR APPROVAL — JULY 03,2002 DATE

CHAIRMAN STANDARDS COMMITTEE APPROVED — JULY 03,2002 DATE

DEPUTY DIRECTOR

STANDARD DRAWING TITLE: PIPE CULVERTS MINIMUM COVER

STD DWG DG 4

BACKFILL/ BEDDING REQUIREMENTS FOR PLASTIC PIPE, METAL PIPE & PIPE ARCH CULVERTS

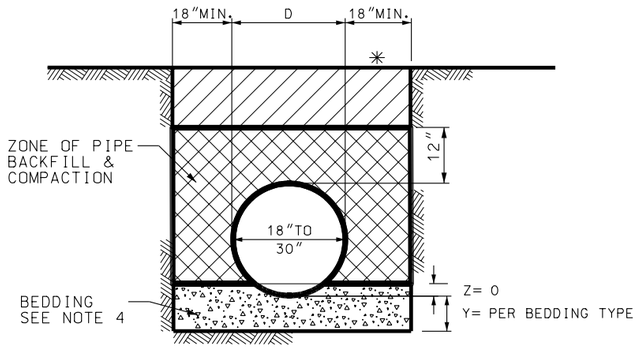

FOR TYPE I BEDDING Y= 8"
FOR TYPE II BEDDING Y=12"
FOR TYPE III BEDDING Y=24"

✳ INCREASE THIS DIMENSION TO D IF PIPE IS PLACED IN AN EMBANKMENT WITHOUT THE BENEFIT OF TRENCHING

DETAIL "A"

FOR CIRCULATOR PIPE
HAVING DIAMETERS LESS THAN 36"

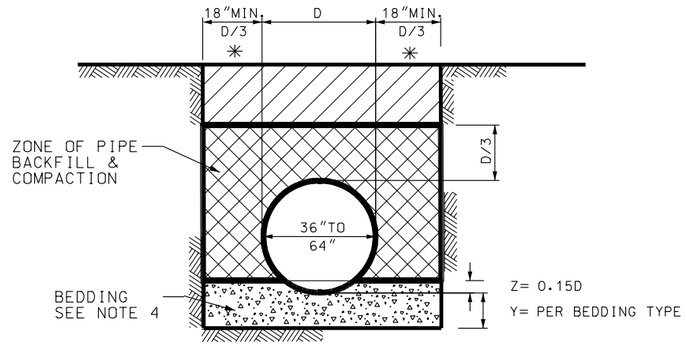

FOR TYPE I BEDDING Y= 8"
FOR TYPE II BEDDING Y=12"
FOR TYPE III BEDDING Y=24"

✳ INCREASE THIS DIMENSION TO D IF PIPE IS PLACED IN AN EMBANKMENT WITHOUT THE BENEFIT OF TRENCHING

DETAIL "C"

FOR CIRCULATOR PIPE
HAVING DIAMETERS BETWEEN 36" AND 72" INCLUSIVE

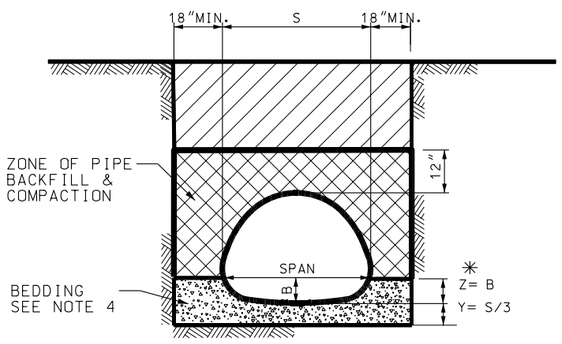

DETAIL "B"

FOR ARCH PIPE
HAVING SPANS LESS THAN 72" INCLUSIVE

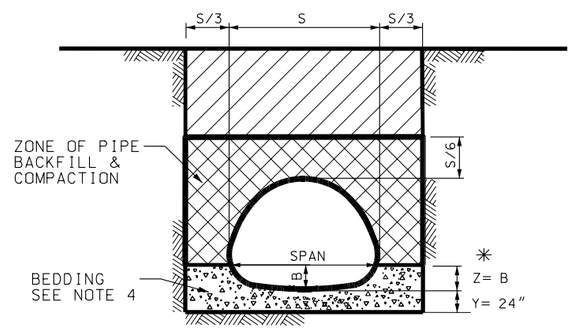

✳ Z = DEPTH OF BEDDING AT INVERT IS TO THE WIDEST POINT ON THE PIPE ARCH CULVERT.

DETAIL "D"

FOR ARCH PIPE
HAVING SPANS OF 74" AND LARGER

NOTES:

1. PRECOMPACTION & COMPACTION: PER AASHTO T 99 WITH DENSITY NOT LESS THAN 96 PERCENT OF LABORATORY DENSITY.
2. BEDDING DETAIL AS SHOWN IS FOR USE WITH UDOT's STANDARD DRAWINGS DG 1, DG 2 & DG 3.
3. RECESS THE BEDDING TO RECEIVE CULVERT JOINTS WHERE APPLICABLE.
4. HAUNCH AREAS UNDER PIPE MUST BE IN FIRM AND INTIMATE CONTACT WITH THE ENTIRE BOTTOM SURFACE OF THE PIPE WITHOUT DISTURBING THE PIPE FROM SPECIFIED LINE AND GRADE.
5. THE WIDTH OF THE TRENCH BOX, OR OTHER SHIELD, MUST EXCEED THE REQUIRED WIDTH OF THE BACKFILL IN THE BEDDING AND BACKFILL ZONES.

TABLE 1

TYPE OF BEDDING	TYPE OF SOIL FOUNDATION	TYPE OF BEDDING MATERIAL
TYPE I	OTHER THAN ROCK OR UNSTABLE SOIL	ON-SITE MATERIAL TO BE PRECOMPACTED
TYPE II	ROCK	ON - SITE MATERIAL
TYPE III	UNSTABLE	GRANULAR BACKFILL BORROW (2" MAX.)

UNSTABLE SOILS = FOUNDATION CONSISTING OF ALL ORGANIC SOILS OR MATERIALS SUCH AS PEAT, MOSS & BOG, OR FINE GRAINED SOILS (SILTS OR CLAYS) AND UNCEMENTED SANDS WHOSE WATER CONTENT EXCEED THEIR LIQUID LIMIT, SUCH SOILS WILL REQUIRE THAT A "TYPE III" BEDDING BE USED.

LEGEND:

= USE ON SITE BEDDING MATERIAL OR GRANULAR BACKFILL BORROW (2" MAX.) AS REQ'D. (IN ACCORDANCE WITH THE TYPE OF BEDDINGS I,II OR III) MEETING THE FOLLOWING REQUIREMENTS:
- A. ON-SITE MATERIAL EXCLUDING UNSTABLE SOIL AS DEFINED BELOW.
- B. USE GRANULAR BACKFILL BORROW HAVING INTERMEDIATE FRACTIONS FROM NO.200 SIEVE TO 2" MAXIMUM MATERIAL.

= ZONE OF PIPE BACKFIL & COMPACTION. USE ON-SITE MATERIAL CONTAINING NO ROCK LARGER THEN 2" IN SIZE & FREE OF FROZEN LUMPS OR CLAY.

FLOWABLE FILL MAY BE USED FOR BACKFILL AND BEDDING.

NO.	DATE	APPR.	REMARKS

REVISIONS

UTAH DEPARTMENT OF TRANSPORTATION
STANDARD DRAWINGS FOR ROAD AND BRIDGE CONSTRUCTION
SALT LAKE CITY, UTAH

RECOMMENDED FOR APPROVAL — JULY 03,2002 DATE

CHAIRMAN STANDARDS COMMITTEE APPROVED — JULY 03,2002 DATE

DEPUTY DIRECTOR

STANDARD DRAWING TITLE: PLASTIC PIPE,METAL PIPE OR PIPE ARCH CULVERT BEDDING

STD DWG
DG 5

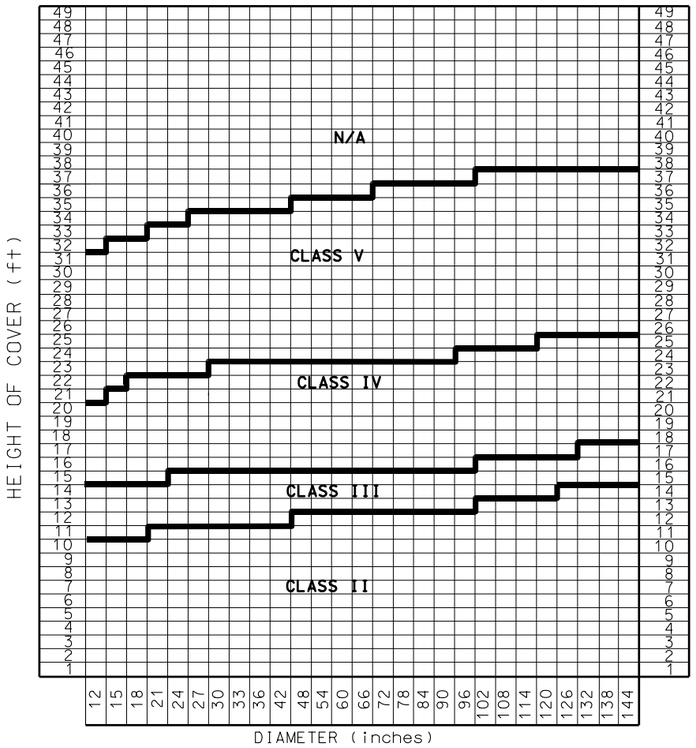

REINFORCED CIRCULAR PIPE FILL HEIGHT TABLE

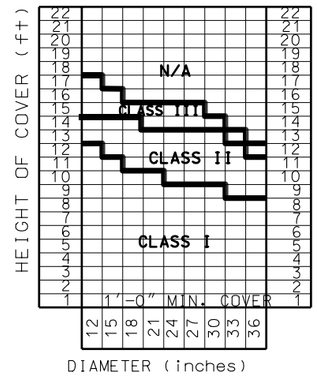

NON-REINFORCED CIRCULAR PIPE FILL HEIGHT TABLE

NOTES:

1. PRECOMPACTION & COMPACTION: REFER TO AASHTO T-99
2. RECESS THE BEDDING TO RECEIVE CULVERT JOINTS WHERE APPLICABLE.
3. HAUNCH AREAS UNDER PIPE MUST BE IN FIRM AND INTIMATE CONTACT WITH THE ENTIRE BOTTOM SURFACE OF THE PIPE WITHOUT DISTURBING THE PIPE FROM SPECIFIED LINE AND GRADE.
4. USE A MINIMUM 12 inches HEIGHT (H) OF FILL BETWEEN THE TOP THE CULVERT AND BOTTOM OF ROADWAY SURFACING FOR REINFORCED AND NON-REINFORCED CONCRETE PIPES.
5. MAINTAIN A MINIMUM 24 inches OF COVER FOR REINFORCED AND 48 inches OF COVER FOR NON-REINFORCED PIPE DURING CONSTRUCTION.

INSTALLATION SOILS AND MINIMUM COMPACTION REQUIREMENTS

TYPE OF BEDDING	TYPE OF SOIL FOUNDATION	BEDDING THICKNESS	HAUNCH & OUTER BEDDING	LOWER SIDE
TYPE I	OTHER THAN ROCK OR UNSTABLE SOIL	Do/24 BUT NOT LESS THAN 6"	95 % A1,A3	90% A1, A3 OR 95% A2, A4 OR 100% A5, A6 OR NATURAL SOILS OF EQUAL FIRMNESS
TYPE II	ROCK	Do/12 BUT NOT LESS THAN 12"	95 % A1,A3	90% A1, A3 OR 95% A2, A4 OR 100% A5, A6 OR NATURAL SOILS OF EQUAL FIRMNESS
TYPE III	UNSTABLE *	NOT LESS THAN 12"	95 % A1,A3	90% A1, A3 OR 95% A2, A4 OR 100% A5, A6 OR NATURAL SOILS OF EQUAL FIRMNESS

* UNSTABLE SOIL FOUNDATION : FOUNDATION CONSISTING OF ORGANIC SOILS OR MATERIALS SUCH AS PEAT. MOSS & BOG OR FINE GRAINED SOILS (SILTS OR CLAYS) AND UNCEMENTED SANDS WHOSE WATER CONTENT EXCEEDS THEIR LIQUID LIMIT, SUCH SOILS WILL REQUIRE THAT A "TYPE III" BEDDING BE USED.

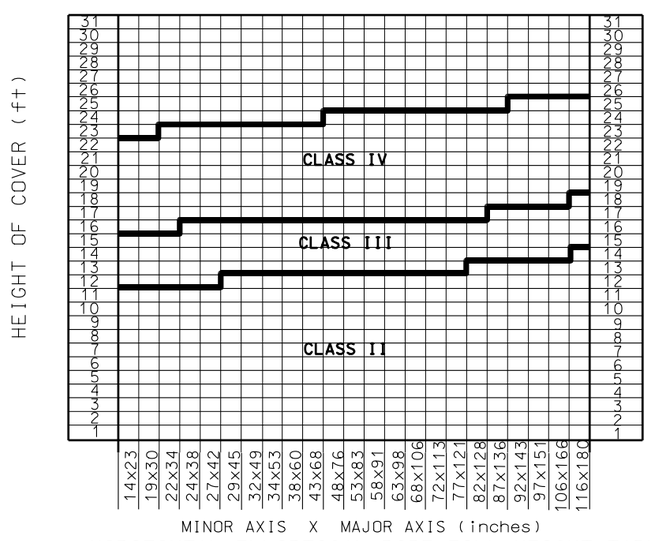

HORIZONTAL ELLIPTICAL PIPE FILL HEIGHT TABLE

LEGEND:

= USE ON SITE BEDDING MATERIAL OR GRANULAR BACKFILL BORROW (2"MAX.) AS REQ'D. (IN ACCORDANCE WITH THE TYPE OF BEDDINGS I,II OR III) MEETING THE FOLLOWING REQUIREMENTS:

A. ON-SITE MATERIAL EXCLUDING UNSTABLE SOIL AS DEFINED BELOW.
B. USE GRANULAR BACKFIL BORROW HAVING INTERMEDIATE FRACTIONS FROM NO.200 SIEVE TO 2" MAXIMUM MATERIAL.

= ZONE OF PIPE BACKFIL & COMPACTION. USE ON-SITE MATERIAL CONTAINING NO ROCK LARGER THEN 2" IN SIZE & FREE OF FROZEN LUMPS OR CLAY.

BACKFILL / BEDDING REQUIREMENTS

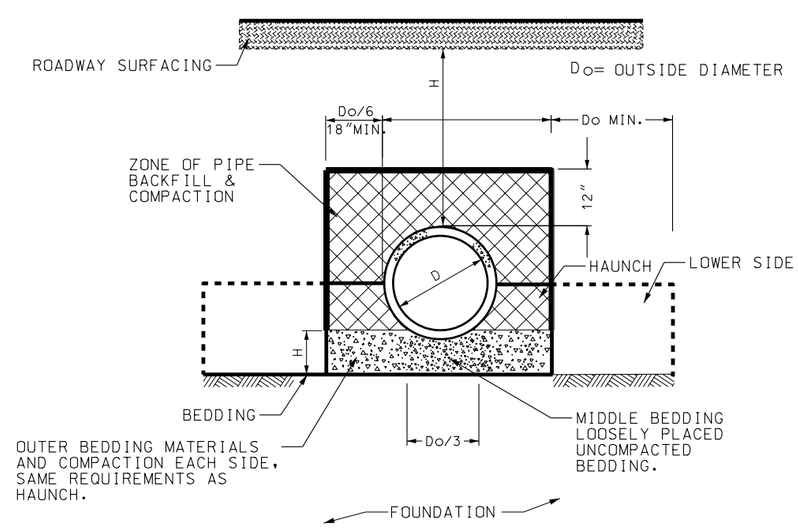

REVISIONS

NO.	DATE	APPR.	REMARKS

UTAH DEPARTMENT OF TRANSPORTATION
STANDARD DRAWINGS FOR ROAD AND BRIDGE CONSTRUCTION
SALT LAKE CITY, UTAH

RECOMMENDED FOR APPROVAL — JULY 03,2002 DATE
CHAIRMAN STANDARDS COMMITTEE APPROVED — JULY 03,2002 DATE
DEPUTY DIRECTOR

PRECAST CONCRETE PIPE CULVERT

STANDARD DRAWING TITLE

STD DWG
DG 6

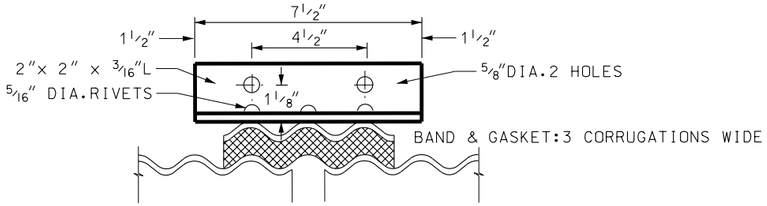

18"– 30" DIAMETER INCLUSIVE

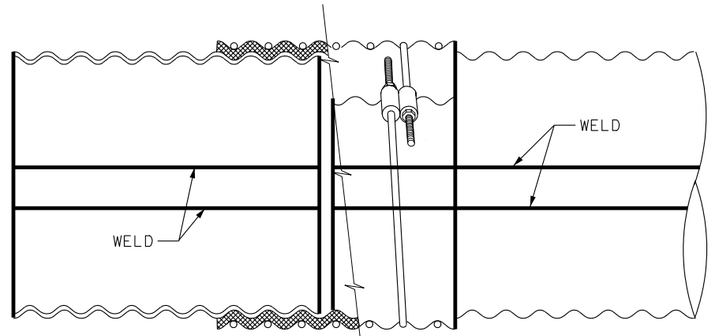

BAND WIDTH

7.5"FOR 18"– 30" DIA. C.M.P. INCLUSIVE
12" FOR 36"– 60" DIA. C.M.P. INCLUSIVE
24" FOR 66"– 84" DIA. C.M.P. INCLUSIVE
1 PIECE BAND FOR 18" – 42" DIA. C.M.P.
2 PIECE BAND FOR 48" – 84" DIA. C.M.P.

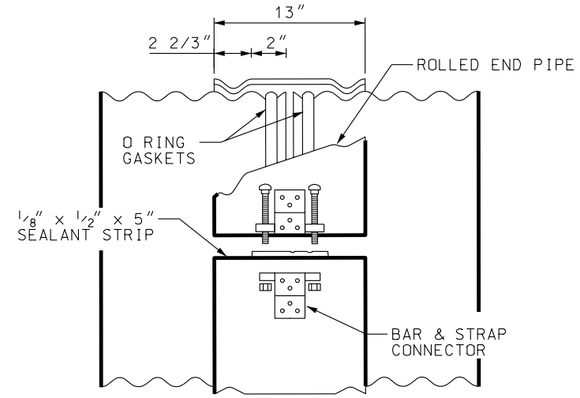

BAND THICKNESS: MATCH PIPE WALL THICKNESS, BUT IN NO CASE LESS THAN 16 GAUGE AND NEED NOT EXCEED 14 GAUGE. USE TWO PIECE BAND FOR PIPE OVER 42" DIAMETER.

TYPE "C"

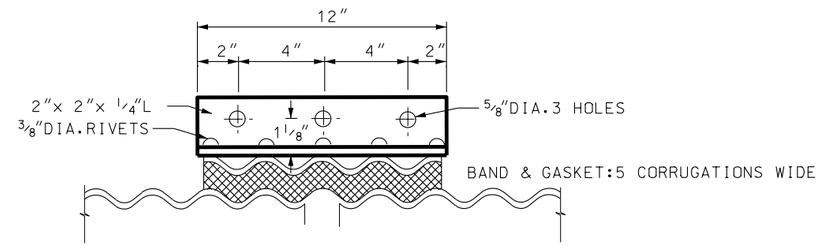

36"– 60" DIAMETER INCLUSIVE

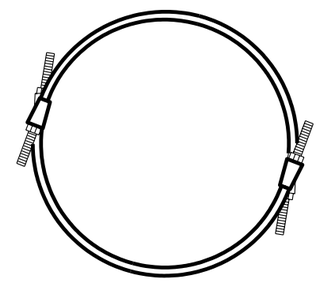

TYPE "B" C.M.P. COUPLING

SIZE OF ROD & SILO TYPE LUG

1/4" DIA. FOR 18" – 21" DIA. C.M.P.
3/4" DIA. FOR 24" – 36" DIA. C.M.P.
1/2" DIA. FOR 42" – 84" DIA. C.M.P.
1 PIECE HOOPS FOR 18" – 42" DIA. C.M.P.
2 PIECE HOOPS FOR 48" – 84" DIA. C.M.P.

LONGITUDINAL SEAMS OF C.M.P. AT 45°.

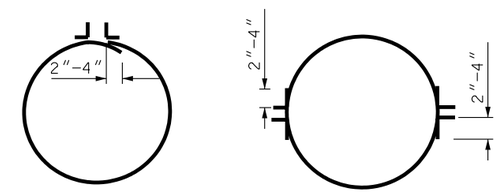

ONE PIECE BAND
FOR 18"– 42"DIA.
PIPE CULVERTS.

TWO PIECE BAND
FOR 48"– 84"DIA.
PIPE CULVERTS.

ALTERNATE OVERLAPS FOR TWO PIECE BANDS, FOR BOTH TYPES, AS SHOWN ON DIAGRAM

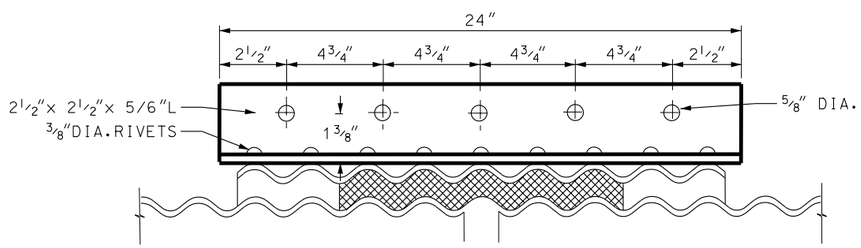

66"– 84" DIAMETER INCLUSIVE

BAND: 9 CORRUGATIONS WIDE
GASKET:5 CORRUGATIONS WIDE

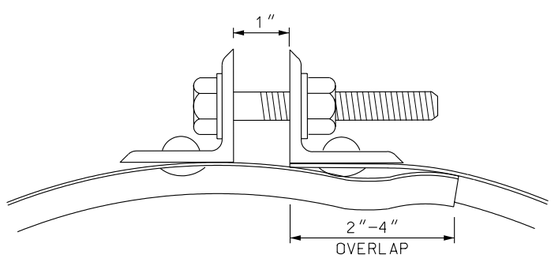

1/2"DIA. HEX. BOLT & NUT WITH WASHER OR
1/2" DIA. CARRIAGE BOLT & NUT WITH WASHER
(9/16" × 3/4" SLOTTED OPENING)

TYPE "A" C.M.P. COUPLING

TABLE 1

NOMINAL PIPE DIAMETER inch	GASKET LENGTH inch
15	44
18	54
21	63
24	72
27	80
30	90
33	97
36	107
42	126
48	144
54	160
60	179
66	198
72	214
78	232
84	248
90	267
96	286

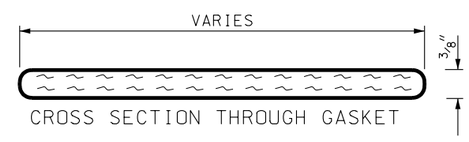

CROSS SECTION THROUGH GASKET

NOTES:

1. THICKNESS OF CONNECTING BANDS: IN ACCORDANCE WITH STANDARD SPECIFICATIONS.
2. KEEP DIRT & GRAVEL FROM BETWEEN PIPE & BAND.
3. USE A CHAIN HOIST, CHAIN OR CABLE CINCHING TO PRODUCE A TIGHT JOINT BEFORE NUTS ARE TIGHTENED.
4. USE A 2"MINIMUM OVERLAP FOR BANDS.
5. COMPLY WITH TABLE 1 FOR GASKETS DIMENSIONS USE A CLOSED CELL NEOPRENE, SKINNED ALL FOUR SIDES MATERIAL MEETING THE REQUIREMENTS OF ASTM D 1056 GRADE SCE-43L. GASKETS; 1-PIECE CONTINUOUS CONSTRUCTION.
6. FOR FASTENING ANGLES USE FLATHEAD RIVETS FREE OF SHARP POINTS OR EDGES (AASHTO M 36-60).

NO.	DATE	APPR.	REMARKS

REVISIONS

UTAH DEPARTMENT OF TRANSPORTATION
STANDARD DRAWINGS FOR ROAD AND BRIDGE CONSTRUCTION
SALT LAKE CITY, UTAH

RECOMMENDED FOR APPROVAL — JULY 03,2002 DATE
CHAIRMAN STANDARDS COMMITTEE APPROVED — JULY 03,2002 DATE
DEPUTY DIRECTOR

GASKETED JOINTS OR COUPLING BANDS FOR C.M.P.
STANDARD DRAWING TITLE

STD DWG
DG 7

END SECTIONS FOR CIRCULAR PIPE CORRUGATIONS

3″ × 1″ ; 2 2/3″ × 1/2″
5″ × 1″ ; 3/4″ × 3/4″ × 7 1/2″
AND 3/4″ × 1″ × 11 1/2″

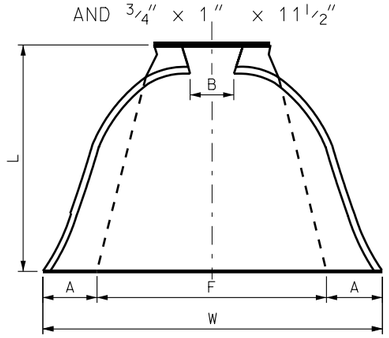

PLAN

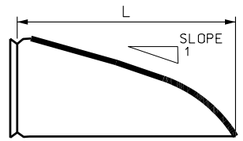

TYPICAL CROSS SECTION

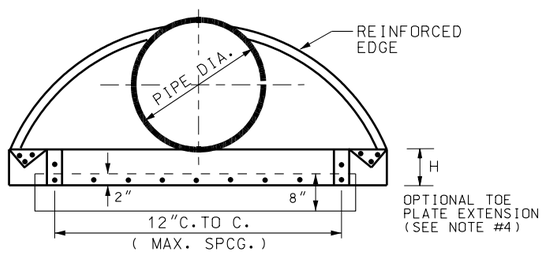

ELEVATION

LINE NO.	PIPE DIA	THICK--NESS	END SECTION DIMENSIONS						
			A	B	H	F	L	W MAX.WIDTH	APPROXIMATE AVERAGE END SECTION SLOPE
	inch	inch	inch	inch	inch	inch	inch	inch	
1	12	0.064	5	7	6	22	21	44	2 1/4
2	15	0.064	6	8	6	28	26	52	2 1/4
3	18	0.064	7	10	6	34	31	58	2 1/8
4	21	0.064	8	12	6	40	36	66	2 1/8
5	24	0.064	9	13	6	46	41	72	2 1/8
6	30	0.079	11	16	8	55	51	88	2 1/8
7	36	0.079	13	19	9	70	60	105	2
8	42	0.109	15	25	10	82	69	122	2 1/8
9	48	0.109	17	29	12	88	78	131	2
10	54	0.109	17	33	12	100	84	143	2
11	60	0.109	17	36	12	112	87	157	1 7/8
12	66	0.109	17	39	12	118	87	162	1 5/8
13	72	0.109	17	44	12	120	87	169	1 7/8
14	78	0.109	17	48	12	130	87	178	1 3/8
15	84	0.109	17	52	12	136	87	184	1 1/3
16	90	0.109	17	58	12	142	87	188	1 1/4
17	96	0.109	17	58	12	144	87	197	1 1/8

FILL SLOPE NEED NOT MATCH THE END SECTION SLOPE.
FILL CAN BE SHAPED AT EACH SITE TO FIT.

1. SOME LARGER SIZES MAY REQUIRE FIELD ASSEMBLY.
2. OPTIONAL TOE PLATES MAY BE PROVIDED TO DEPTH SPECIFIED.
3. FOR 78″ × 52″ AND 84″ × 58″ SIZES REINFORCED EDGES TO BE SUPPLEMENTED WITH GALVANIZED STIFFENER ANGLES. THE ANGLES TO BE ATTACHED BY GALVANIZED NUTS AND BOLTS FOR STEEL UNITS OR ALUMINIUM NUTS AND BOLTS FOR ALUMINIUM UNITS.

TYPE 1

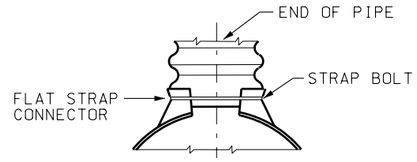

AVALIABLE IN SIZES 12″ THROUGH 24″ ROUND AND 17″ × 13″ THROUGH 28″ × 22″ PIPE-ARCHES

TYPE 2

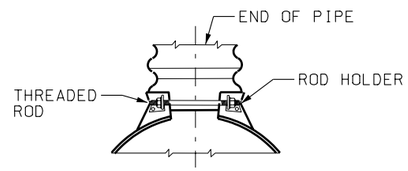

AVALIABLE IN SIZES 30″ THROUGH 96″ ROUND AND 35″ × 24″ THROUGH 57″ × 38″ PIPE-ARCHES

TYPE 3

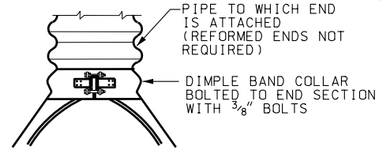

AVAILABLE FOR ALL ROUND AND PIPE ARCH SIZES SHOWN (TYPE 1 AND TYPE 2 CONDITIONS ARE RECOMMENDED FOR THE SMALLER SIZES WITH ANNULAR ENDS)

APPLICABLE SPECIFICATIONS (CIRCULAR AND ARCH PIPE)

1. CONFORM TO:
   AASHTO M 218 (GALVANIZED STEEL SHEET)
   AASHTO M 197 (ALUMINIUM ALLOY SHEET)
2. ALL 3 PIECE BODIES TO HAVE 12 GAUGE MIN. SIDES AND 10 GAUGE MIN.CENTER PANELS. MULTIPLE PANEL BODIES TO HAVE SEAMS WHICH ARE TO BE TIGHTLY JOINED BY GALVANIZED RIVETS OR BOLTS FOR STEEL UNITS AND ALUMINIUM RIVETS OR BOLTS FOR ALUMINUM UNITS.
3. GALVANIZED STEEL OR ALUMINIUM TOE PLATE TO BE AVAILABLE AS AN ACCESSORY. WHEN SPECIFIED, AND WILL BE THE SAME THICKNESS AS THE END SECTION.
4. GALVANIZED STEEL OR ALUMINIUM LIFTING LUG AVAILABLE AS AN ACCESSORY, WHEN SPECIFIED.
5. END SECTIONS CAN BE USED WITH ANY OR PIPE OR PIPE ARCH WALL THICKNESS SPECIFIED.

END SECTIONS FOR CORRUGATED METAL PIPE ARCHES

3″ × 1″ ; 5″ × 1″
AND 2 2/3″ × 1/2″

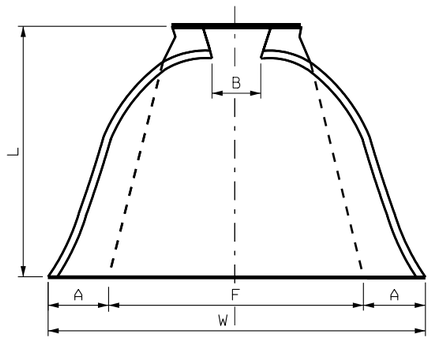

PLAN

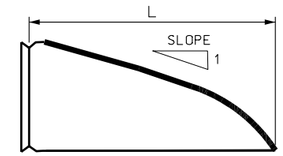

TYPICAL CROSS SECTION

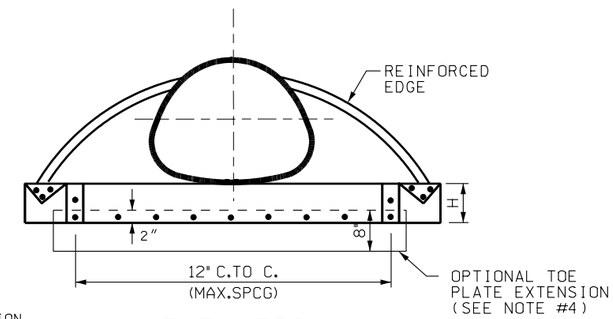

ELEVATION

LINE NO.	SPAN × RISE	EQUIV ROUND	THICKNESS		END SECTION DIMENSIONS						
			GALV. STEEL	ALUM.	A MIN.	B MAX.	H MIN.	F MIN.	L ±50	W MAX.WIDTH	APPROXIMATE AVERAGE AND SECTION SLOPE
	inch	inch	inch	inch	inch	inch	inch	inch	inch	inch	
1	17x13	15	0.064	5	5	9	6	28	20	52	2 1/8
2	21x15	18	0.064	6	6	11	6	34	24	58	2
3	24x18	21	0.064	7	7	12	6	40	28	63	2 1/8
4	28x20	24	0.064	7	7	16	6	46	32	70	2
5	35x24	30	0.079	9	9	16	6	58	39	85	1 7/8
6	42x29	36	0.079	11	11	18	7	73	46	104	1 7/8
7	49x33	42	0.109	12	12	21	9	82	53	117	1 3/4
8	57x38	48	0.109	16	16	26	12	88	62	132	1 7/8
9	64x43	54	0.109	17	17	30	12	100	69	144	1 7/8
10	71x47	60	0.109	17	17	36	12	112	77	156	1 7/8
11	77x52	66	0.109	17	17	36	12	124	77	167	1 5/8
12	83x57	72	0.109	17	17	44	12	130	77	177	1 1/2

FILL SLOPE NEED NOT MATCH THE END SECTION SLOPE.
FILL CAN BE SHAPED AT EACH SITE TO FIT.

1. SOME LARGER SIZES MAY REQUIRE FIELD ASSEMBLY.
2. OPTIONAL TOE PLATES MAY BE PROVIDED TO DEPTH SPECIFIED.
3. FOR 78″ × 52″ AND 84″ × 58″ SIZES REINFORCED EDGES TO BE SUPPLEMENTED WITH GALVANIZED STIFFENER ANGLES. THE ANGLES TO BE ATTACHED BY GALVANIZED NUTS AND BOLTS FOR STEEL UNITS OR ALUMINIUM NUTS AND BOLTS FOR ALUMINIUM UNITS.
4. ANGLE REINFORCMENT WILL BE PLACED UNDER THE CENTER PANEL SEAMS ON THE 88″ × 58″ SIZES.

NO.	DATE	APPR.	REMARKS

REVISIONS

UTAH DEPARTMENT OF TRANSPORTATION
STANDARD DRAWINGS FOR ROAD AND BRIDGE CONSTRUCTION
SALT LAKE CITY, UTAH

RECOMMENDED FOR APPROVAL — JULY 03,2002 DATE
CHAIRMAN STANDARDS COMMITTEE APPROVED — JULY 03,2002 DATE
DEPUTY DIRECTOR

STANDARD DRAWING TITLE
METAL CULVERT END SECTION

STD DWG
DG 8

METAL & PLASTIC CULVERTS

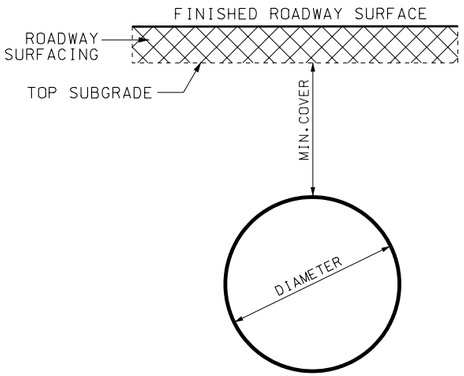

METAL PIPE ARCHES

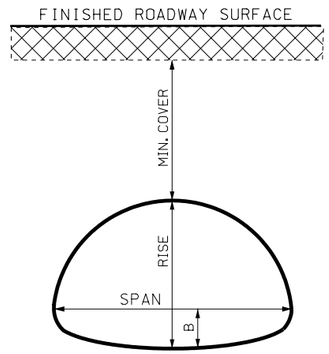

MINIMUM COVER

A. MEASURE MINIMUM COVER FROM THE TOP OF PIPE CULVERT TO THE BOTTOM OF ROADWAY SURFACING.

B. MEASURE MAXIMUM FILL HEIGHT FROM THE TOP OF THE PIPE THE PIPE TO THE TOP OF THE PAVEMENT FOR BOTH FLEXIBLE AND RIGID PAVEMENTS.

C. MINIMUM COVER OVER THE CROWN OF THE PIPE IS ADEQUATE ONLY FOR FINISHED CONSTRUCTION. PROVIDE ADEQUATE COVER TO PROTECT PIPE AND PIPE ARCH FROM DAMAGE DURING CONSTRUCTION..

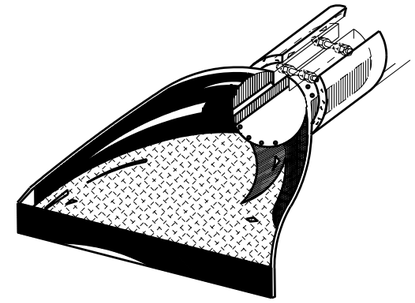

METAL INSERT

FOR CONNECTING CONCRETE PIPE OR CORRUGATED POLYETHYLENE PIPE TO METAL END SECTION.

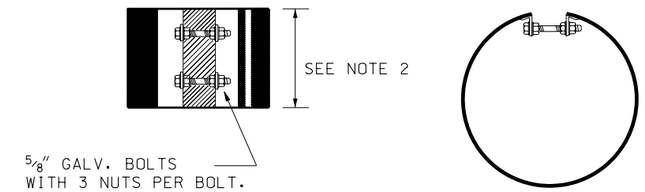

METAL INSERTS

1. FABRICATED END SECTION FROM NON FLAMMABLE MATERIALS.
2. CONNECT METAL END SECTIONS TO CONCRETE PIPES OR PLASTIC PIPES USING METAL INSERTS.
3. FOR PIPE DIAMETERS UP TO AND INCLUDING 60 inch. USE A MINIMUM OF 2 BOLTS WITH A LENGTH OF 12 inches MINIMUM.
4. FOR PIPE DIAMETERS GREATER THAN 60 inch USE A MINIMUM OF 3 BOLTS WITH A LENGTH OF 18 inch MINIMUM.
5. GALVANIZED METAL INSERT AND ALL BOLTS, WASHERS AND RIVETS OR WELDS.
6. USE THE SAME WALL THICKNESS FOR METAL INSERT AND METAL END SECTION.
7. CLEAN AND COAT ALL WELDS WITH APPROVED ZINC RICH COMPOUND AS RECOMMENDED BY THE SHEET MANUFACTURE.

MULTIPLE INSTALLATIONS

PIPE ARCHES

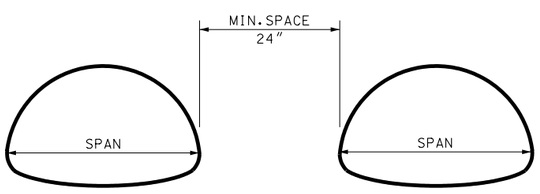

SPAN (inch)	MINIMUM SPACE (inch)
UP TO 36	24
72 TO 86	1/3 SPAN

PIPE CULVERTS

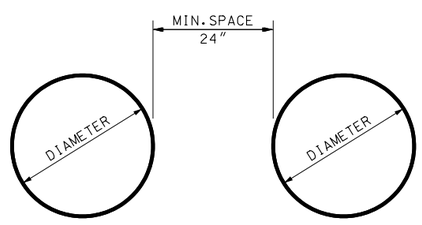

DIAMETER (inch)	MINIMUM SPACE (inch)
UP TO 24	24
48 TO 96	1/2 DIAMETER
96 TO 120	48

REVISIONS

NO.	DATE	APPR.	REMARKS

UTAH DEPARTMENT OF TRANSPORTATION
STANDARD DRAWINGS FOR ROAD AND BRIDGE CONSTRUCTION
SALT LAKE CITY, UTAH

RECOMMENDED FOR APPROVAL — JULY 03,2002 DATE

CHAIRMAN STANDARDS COMMITTEE APPROVED — JULY 03,2002 DATE

DEPUTY DIRECTOR

MISCELLANEOUS PIPE DETAILS

STANDARD DRAWING TITLE

STD DWG
DG 9

CHECK DAMS

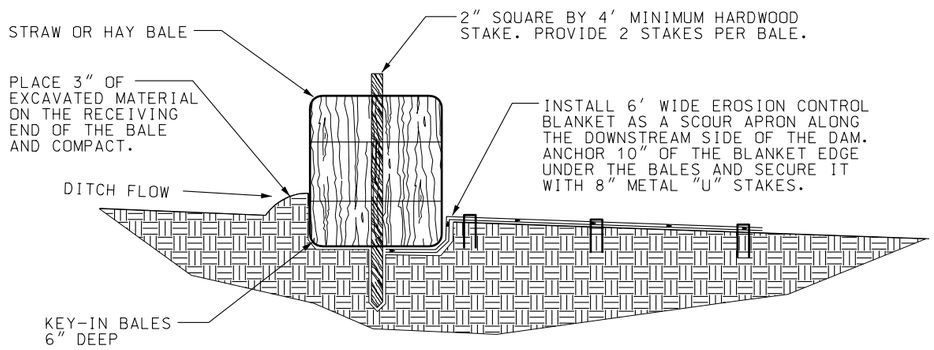

SECTION Y - Y

CONSTRUCT THE CHECK DAM SO THAT POINT "A" IS APPROXIMATELY 4" LOWER THAN POINT "B".

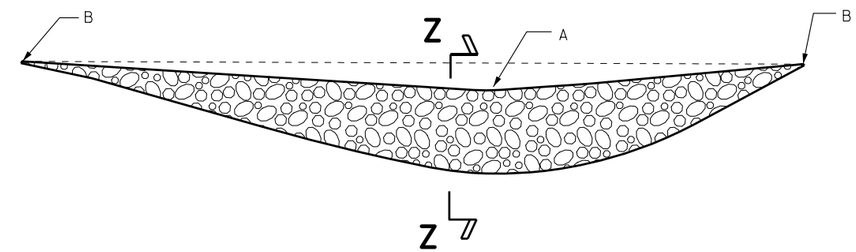

STONE CHECK DAM

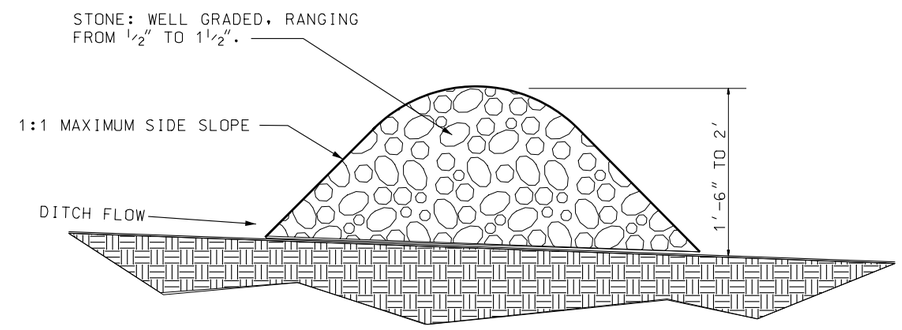

SECTION Z - Z

CONSTRUCT THE CHECK DAM SO THAT POINT "A" IS A MINIMUM OF 4" LOWER THAN POINT "B".

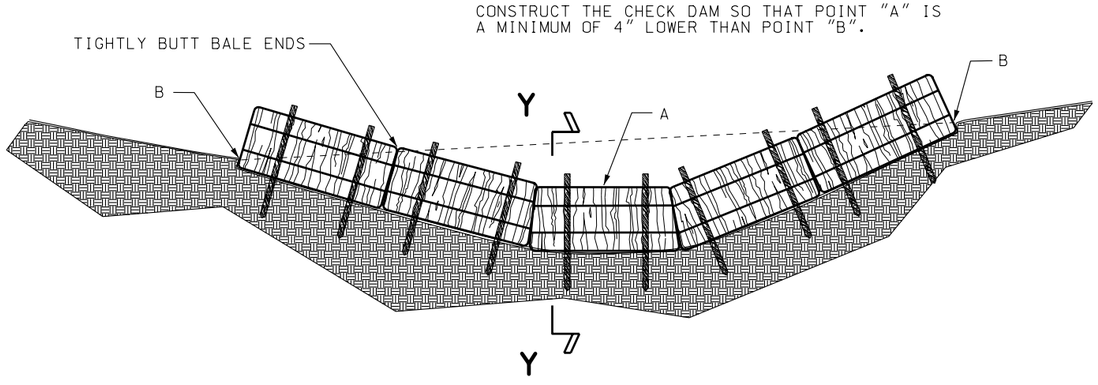

STRAW OR HAY BALE CHECK DAM

NOTES:

1. PLACE CHECK DAMS PERPENDICULAR TO THE FLOWLINE OF THE DITCH.
2. DO NOT PLACE CHECK DAMS ACROSS NATURAL STREAM BEDS.
3. CONSTRUCT CHECK DAMS TO ENSURE WATER DOES NOT FLOW AROUND THE ENDS OF THE DAM.

REVISIONS

NO.	DATE	APPR.	REMARKS

UTAH DEPARTMENT OF TRANSPORTATION
STANDARD DRAWINGS FOR ROAD AND BRIDGE CONSTRUCTION
SALT LAKE CITY, UTAH

RECOMMENDED FOR APPROVAL — JULY 03,2002 DATE

CHAIRMAN STANDARDS COMMITTEE APPROVED — JULY 03,2002 DATE

DEPUTY DIRECTOR

TEMPORARY EROSION CONTROL (CHECK DAMS)

STANDARD DRAWING TITLE

STD DWG
EN 1

SILT FENCE

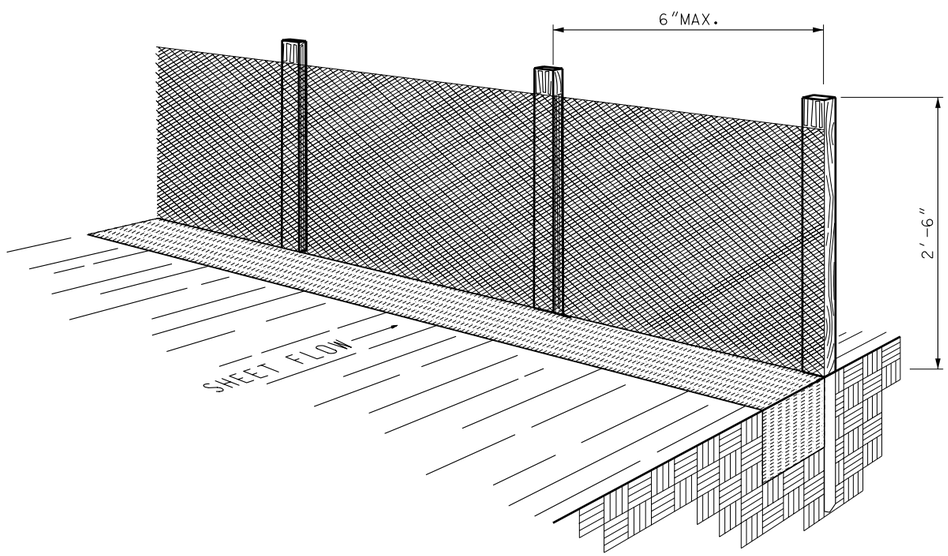

PERSPECTIVE VIEW

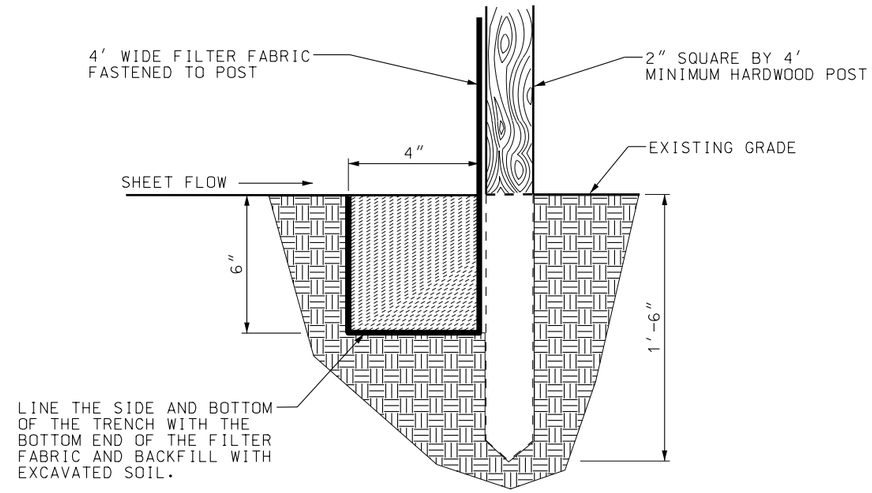

SECTION

NOTES:

1. WHERE POSSIBLE, LAYOUT THE SILT FENCE 5′ TO 10′ BEYOND THE TOE OF SLOPE.
2. ALIGN THE FENCE ALONG THE CONTOUR AS CLOSE AS POSSIBLE.
3. WHEN EXCAVATING THE TRENCH, USE MACHINERY THAT WILL PRODUCE NO MORE THAN THE DESIRED DIMENSIONS.
4. EXTEND THE BOTTOM 1′- 4″ OF FILTER FABRIC TO LINE ALL THREE SIDES OF THE TRENCH.
5. TO AVOID EXCESSIVE PONDING OF WATER AT LOW POINTS ALONG THE FENCE, PROVIDE AN OPENING IN THE SILT FENCE AND INSTALL A CHECK DAM.
6. AVOID USING JOINTS ALONG THE FENCE AS MUCH AS POSSIBLE. IF A JOINT IS NECESSARY, SPLICE THE FILTER FABRIC AT A POST WITH 6″ OVERLAPS AND SECURELY FASTEN BOTH ENDS TO THE POST.
7. MAINTAIN A PROPERLY FUNCTIONING SILT FENCE THROUGHOUT THE DURATION OF THE PROJECT OR UNTIL DISTURBED AREAS HAVE BEEN VEGETATED.
8. REMOVE SEDIMENT AS IT ACCUMULATES AND PLACE IT IN A STABLE AREA APPROVED BY THE ENGINEER.

REVISIONS

NO.	DATE	APPR.	REMARKS

UTAH DEPARTMENT OF TRANSPORTATION
STANDARD DRAWINGS FOR ROAD AND BRIDGE CONSTRUCTION
SALT LAKE CITY, UTAH

RECOMMENDED FOR APPROVAL — JULY 03,2002 DATE

CHAIRMAN STANDARDS COMMITTEE APPROVED — JULY 03,2002 DATE

DEPUTY DIRECTOR

STANDARD DRAWING TITLE
TEMPORARY
EROSION CONTROL
(SILT FENCE)

STD DWG
EN 2

SLOPE DRAIN AND TEMPORARY BERM

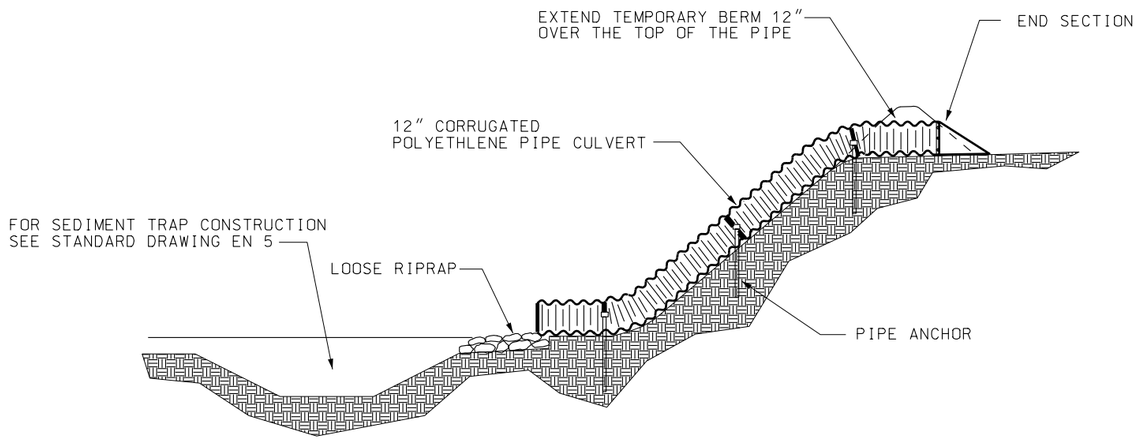

SLOPE DRAIN SECTION

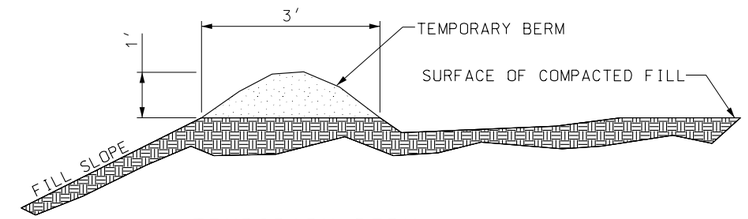

TEMPORARY BERM

NOTES FOR TEMPORARY BERM:

1. COMPACT THE RIDGE OF EXISTING SOIL TO PROVIDE A NON-ERODIBLE BERM THAT DIVERTS STORM RUNOFF FROM RECENTLY CONSTRUCTED SLOPES. REPAIR ANY EROSION OF THE BERM IMMEDIATELY.
2. TEMPORARY BERMS ARE TYPICALLY USED IN CONJUCNCTION WITH SLOPE DRAINS.

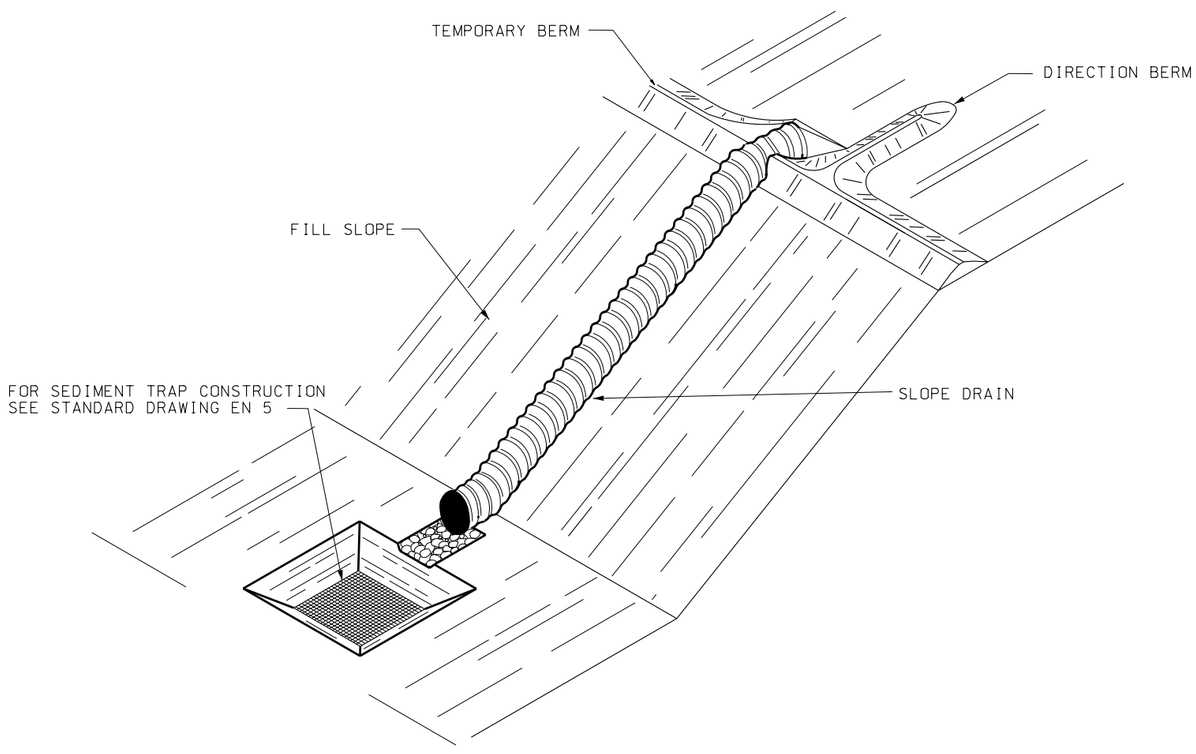

SLOPE DRAIN ISOMETRIC

NOTES FOR SLOPE DRAIN:

1. COMPACT THE SOIL SURFACE AND BERMS AROUND THE ENTRANCE TO THE PIPE END SECTION TO PREVENT WATER FROM UNDERMINING THE PIPE AND ERODING THE SLOPE. REPAIR ANY EROSION AROUND THE INLET, OUTLET OR SLOPE IMMEDIATELY.
2. ANCHOR THE PIPE TO THE GROUND EVERY 10′ TO PREVENT PIPE MOVEMENT AND SUBSEQUENT FAILURES DURING STORM EVENTS.
3. USE WATER-TIGHT FITTINGS AT ALL SLOPE DRAIN CONNECTIONS.
4. EXTEND THE DRAIN A MINIMUM OF 3′ BEYOND THE TOE OF THE SLOPE AND PROVIDE OUTLET PROTECTION.
5. EXTEND THE SLOPE DRAIN AS REQUIRED TO COINCIDE WITH THE HEIGHT OF THE EMBANKMENT.
6. MAINTAIN PROPERLY FUNCTIONING SLOPE DRAINS UNTIL SLOPES HAVE BEEN PERMANENTLY STABILIZED.
7. 50 PERCENT OF THE RIPRAP TO BE BETWEEN 6″ AND 8″ WITH A MAXIMUM SIZE OF 12″ AND A MINIMUM SIZE OF 4″.

REVISIONS

NO.	DATE	APPR.	REMARKS

UTAH DEPARTMENT OF TRANSPORTATION
STANDARD DRAWINGS FOR ROAD AND BRIDGE CONSTRUCTION
SALT LAKE CITY, UTAH

RECOMMENDED FOR APPROVAL — JULY 03,2002 DATE

CHAIRMAN STANDARDS COMMITTEE APPROVED — JULY 03,2002 DATE

DEPUTY DIRECTOR

TEMPORARY EROSION CONTROL (SLOPE DRAIN AND TEMPORARY BERM)

STANDARD DRAWING TITLE

STD DWG

EN 3

DROP-INLET BARRIERS

STRAW AND HAY BALE DROP-INLET BARRIER

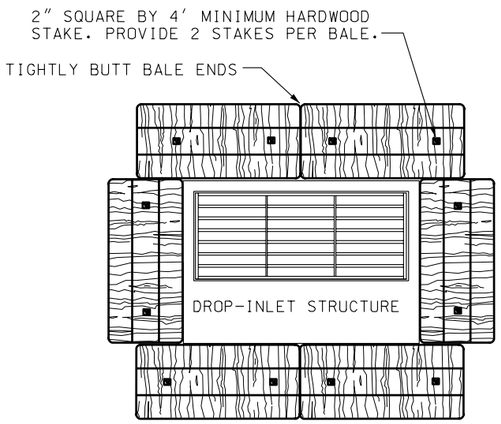

PLAN VIEW

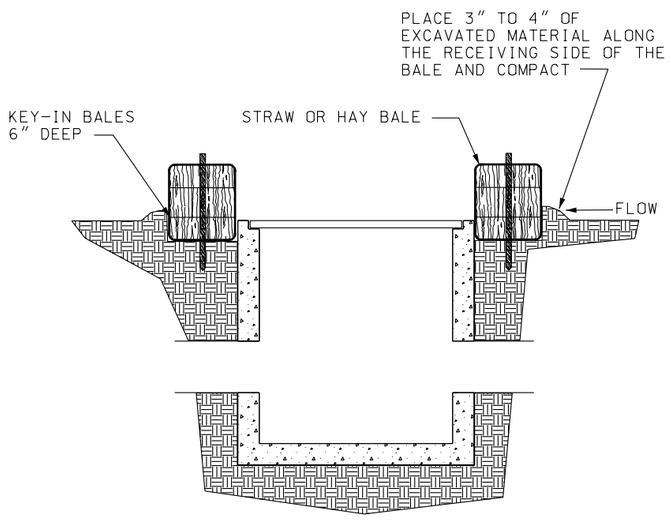

SECTION

NOTES:

1. KEY-IN BALES IN AN EXCAVATED TRENCH AROUND THE PERIMETER OF THE DROP INLET STRUCTURE THAT IS 6" DEEP BY A BALES WIDTH WIDE.
2. OVERLAP ON CORNERS MUST BE AT LEAST HALF A BALE WIDE.
3. DEPENDING ON THE SIZE OF THE INLET STRUCTURE, MORE BALES THAN SHOWN MAY BE REQUIRED.
4. IN MEDIAN AREAS, CONSTRUCT SO THAT THE TOPS OF THE BALES ARE NOT HIGHER THAN THE ADJACENT ROADWAY.
5. MAINTAIN A PROPERLY FUNCTIONING SEDIMENT BARRIER THROUGHOUT CONSTRUCTION OR UNTIL DISTURBED AREAS CONTRIBUTING TO THE INLET HAVE BEEN PAVED OR VEGETATED.
6. REMOVE SEDIMENT AS IT ACCUMULATES AND PLACE IT IN A STABLE AREA APPROVED BY THE ENGINEER.

SILT FENCE DROP-INLET BARRIER

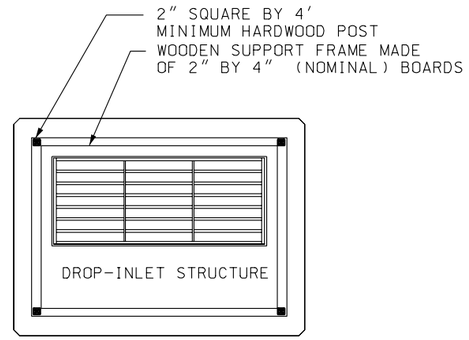

PLAN VIEW

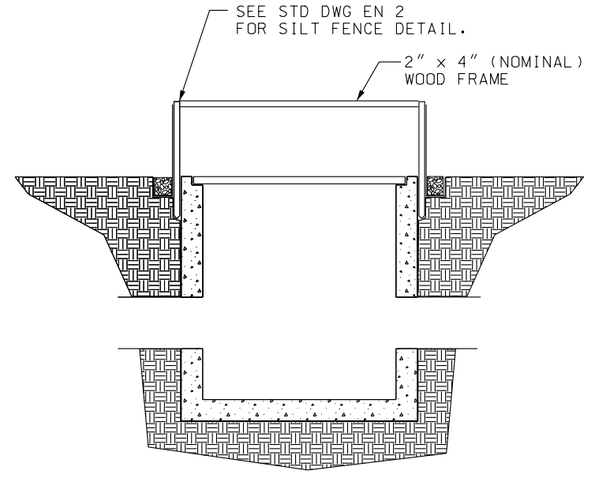

SECTION

NOTES:

1. EXCAVATE A TRENCH AROUND THE CORNER THE PERIMETER OF THE DROP-INLET THAT IS 6" DEEP AND 4" WIDE.
2. DRIVE POSTS AT EACH CORNER OF THE INLET STRUCTURE. IF THE DISTANCE BETWEEN CORNER POSTS EXCEEDS 4', PLACE ANOTHER POST(S) BETWEEN THEM.
3. CONNECT THE TOPS OF ALL THE POSTS WITH A WOODEN SUPPORT FRAME MADE OF 2" BY 4" BOARDS. USE NAILS OR SCREWS FOR FASTENING.
4. IN MEDIAN AREAS, CONSTRUCT SO THAT THE TOP OF THE SILT FENCE IS NOT HIGHER THAN THE ADJACENT ROADWAY.
5. MAINTAIN A PROPERLY FUNCTIONING SILT FENCE BARRIER THROUGHOUT CONSTRUCTION OR UNTIL DISTURBED AREAS CONTRIBUTING TO THE INLET HAVE BEEN PAVED OR VEGETATED.
6. REMOVE SEDIMENT AS IT ACCUMULATES AND PLACE IT IN A STABLE AREA APPROVED BY THE ENGINEER.

STONE DROP-INLET BARRIER

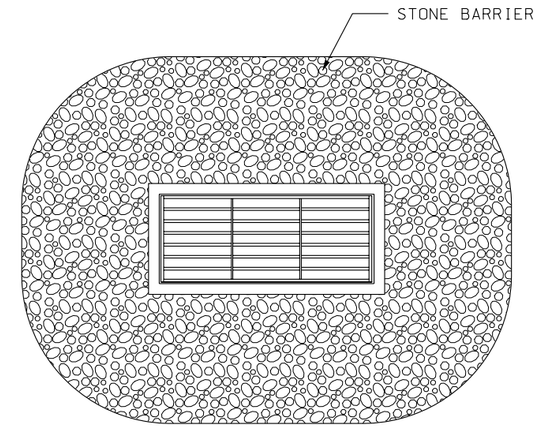

PLAN VIEW

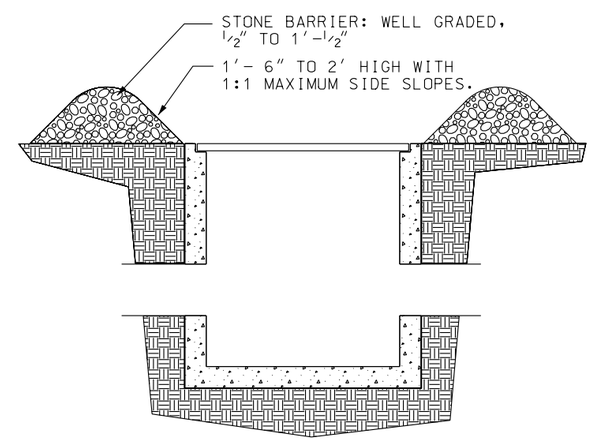

SECTION

NOTES:

1. PLACE STONE BARRIER AS SHOWN AROUND THE INLET OPENING.
2. IN MEDIAN AREAS, CONSTRUCT SO THAT THE TOP OF THE STONE BARRIER IS NOT HIGHER THAN THE ADJACENT ROADWAY.
3. MAINTAIN A PROPERLY FUNCTIONING STONE BARRIER THROUGHOUT CONSTRUCTION OR UNTIL DISTURBED AREAS CONTRIBUTING TO THE INLET HAVE BEEN PAVED OR VEGETATED.
4. REMOVE SEDIMENT AS IT ACCUMULATES AND PLACE IT IN A STABLE AREA APPROVED BY THE ENGINEER.

REVISIONS				
NO.	DATE	APPR.	REMARKS	

UTAH DEPARTMENT OF TRANSPORTATION
STANDARD DRAWINGS FOR ROAD AND BRIDGE CONSTRUCTION
SALT LAKE CITY, UTAH

RECOMMENDED FOR APPROVAL — JULY 03,2002 DATE

CHAIRMAN STANDARDS COMMITTEE APPROVED — JULY 03,2002 DATE

DEPUTY DIRECTOR

STANDARD DRAWING TITLE: TEMPORARY EROSION CONTROL (DROP-INLET BARRIERS)

STD DWG EN 4

SEDIMENT TRAP

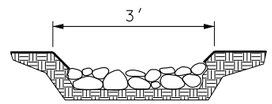

SECTION A-A

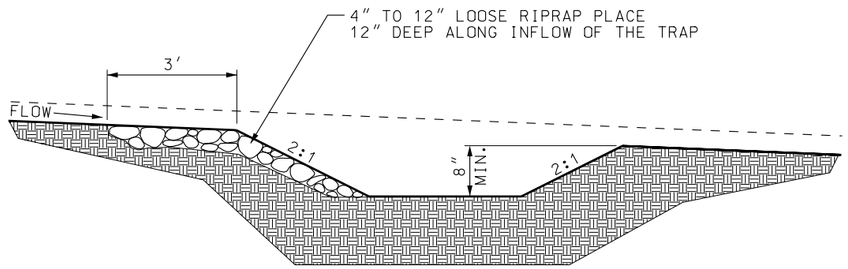

SECTION B-B

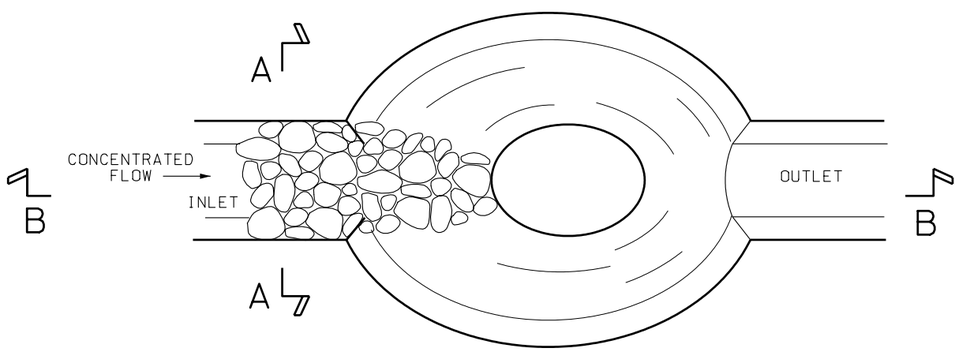

PLAN VIEW

NOTES:

1. PLACE SEDIMENT TRAPS AT LOCATIONS SHOWN ON THE PLANS OR AS DIRECTED BY THE ENGINEER.
2. THE STORAGE CAPACITY OF EACH SEDIMENT TRAP WILL BE IDENTIFIED IN THE PROJECT PLAN SET.
3. CONSTRUCT TRAP LENGTH TWICE AS LONG AS THE WIDTH.
4. MAINTAIN A PROPERLY FUNCTIONING SEDIMENT TRAP THROUGHOUT CONSTRUCTION OR UNTIL DISTURBED AREAS CONTRIBUTING TO THE BASIN HAVE BEEN PAVED OR VEGETATED.
5. REMOVE SEDIMENT AS IT ACCUMULATES AND PLACE IT IN A STABLE AREA APPROVED BY THE ENGINEER.

CURB INLET BARRIER

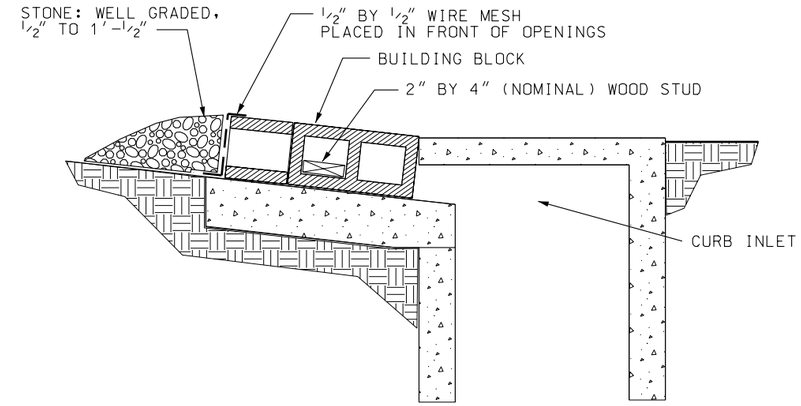

SECTION

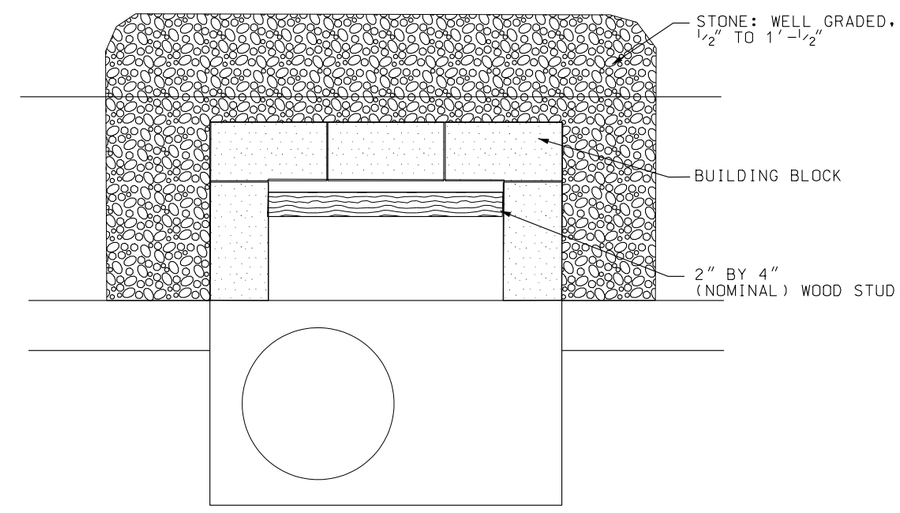

PLAN VIEW

NOTES:

1. PLACE BUILDING BLOCKS, WIRE MESH AND STONE AS SHOWN AROUND THE CURB INLETS.
2. MAINTAIN A PROPERLY FUNCTIONING STONE BARRIER THROUGHOUT CONSTRUCTION OR UNTIL DISTURBED AREAS CONTRIBUTING TO THE INLET HAVE BEEN PAVED OR VEGETATED.
3. REMOVE SEDIMENT AS IT ACCUMULATES AND PLACE IT IN A STABLE AREA APPROVED BY THE ENGINEER.

REVISIONS

NO.	DATE	APPR.	REMARKS

UTAH DEPARTMENT OF TRANSPORTATION
STANDARD DRAWINGS FOR ROAD AND BRIDGE CONSTRUCTION
SALT LAKE CITY, UTAH

RECOMMENDED FOR APPROVAL — JULY 03,2002 DATE

CHAIRMAN STANDARDS COMMITTEE APPROVED — JULY 03,2002 DATE

DEPUTY DIRECTOR

TEMPORARY EROSION CONTROL (SEDIMENT TRAP AND CURB INLET BARRIER)

STANDARD DRAWING TITLE

STD DWG
EN 5

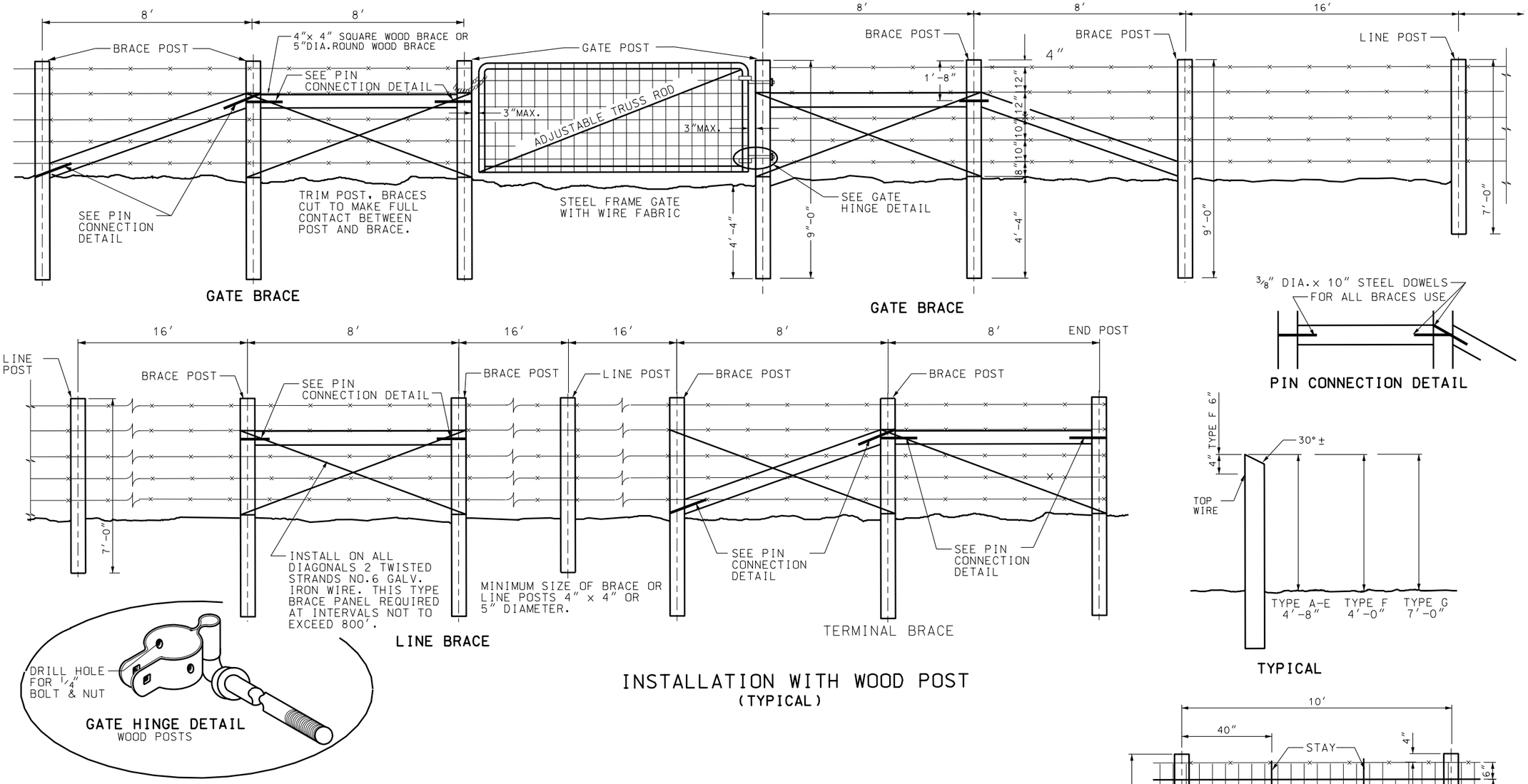

INSTALLATION WITH WOOD POST
(TYPICAL)

POST SIZE, SPACING AND BRACING FOR TYPES A,B,D,E AND F FENCE THE SAME AS SHOWN IN TYPICAL INSTALLATION ABOVE. USE TWO STAYS EVENLY SPACED BETWEEN EACH SET OF POSTS.

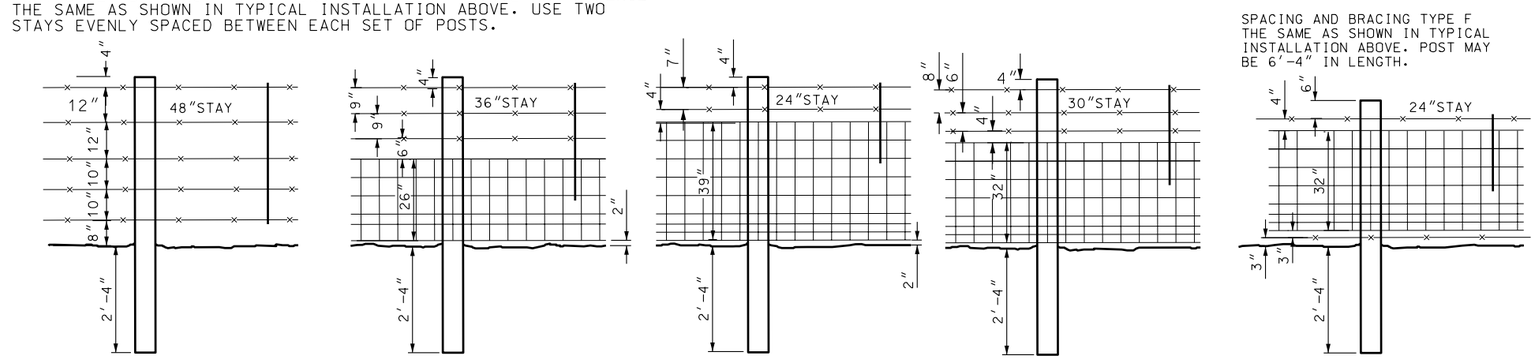

TYPE A

TYPE B

TYPE D

TYPE E

TYPE F
TO BE INSTALLED IN DEER COUNTRY

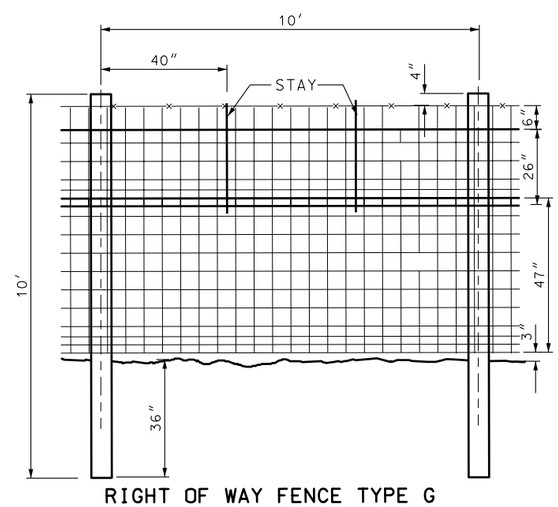

RIGHT OF WAY FENCE TYPE G
(DEER BARRIER)

NOTE: LAP THE 47″ & 26″ MESH WIRE 2″. WIRE TIE OR CLAMP THE 47″ x 26″ WIRE MESH TOGETHER. DO NOT EXCEED 2 FOOT SPACING OF THE CONNECTIONS.

NO.	DATE	APPR.	REVISIONS	REMARKS

UTAH DEPARTMENT OF TRANSPORTATION
STANDARD DRAWINGS FOR ROAD AND BRIDGE CONSTRUCTION
SALT LAKE CITY, UTAH

RECOMMENDED FOR APPROVAL — JULY 03,2002 DATE

CHAIRMAN STANDARDS COMMITTEE APPROVED — JULY 03,2002 DATE

DEPUTY DIRECTOR

RIGHT OF WAY FENCE AND GATES (WOOD POST)

STANDARD DRAWING TITLE

STD DWG
FG 1A

INSTALLATION WITH WOOD POSTS
(TYPICAL.)

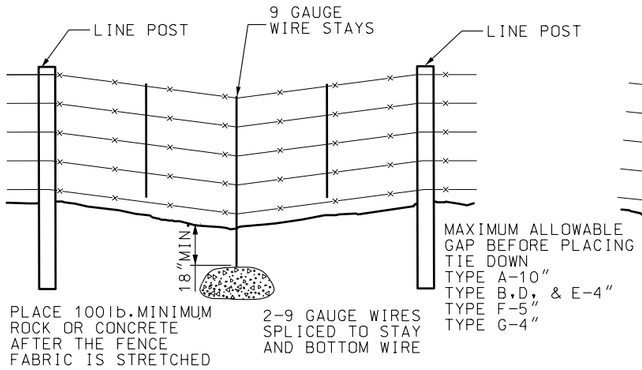

TYPICAL SAG SECTION

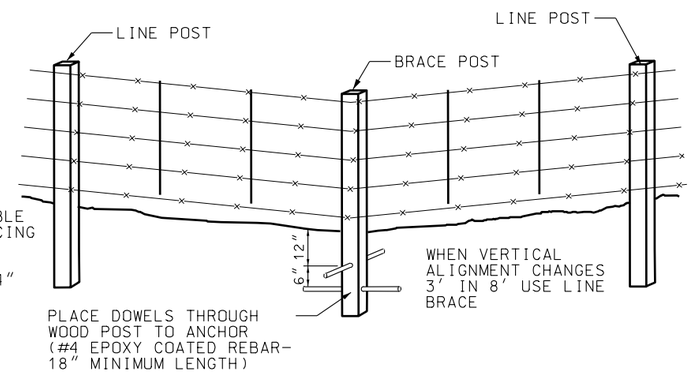

TYPICAL VERTICAL ALIGNMENT CHANGE

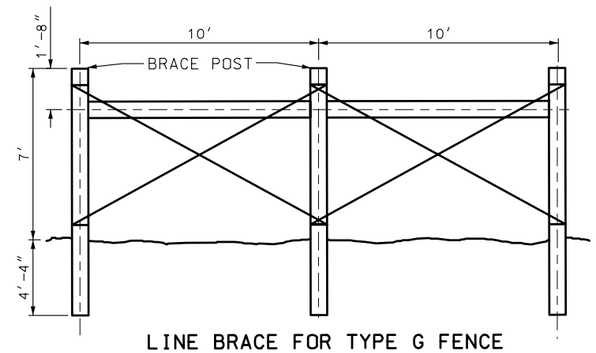

LINE BRACE FOR TYPE G FENCE

BRACE AT INTERWALS NOT EXCEEDING 400'.

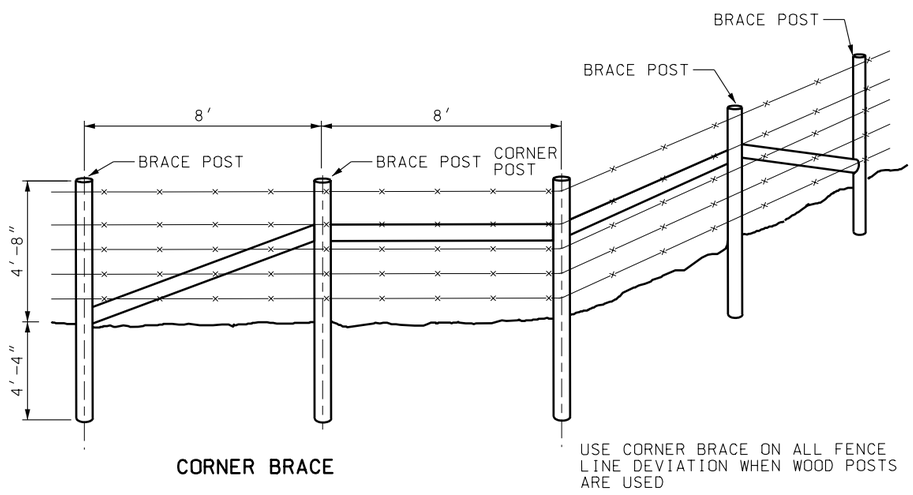

CORNER BRACE

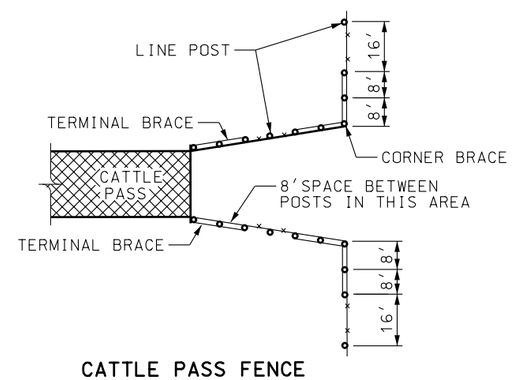

CATTLE PASS FENCE DETAIL

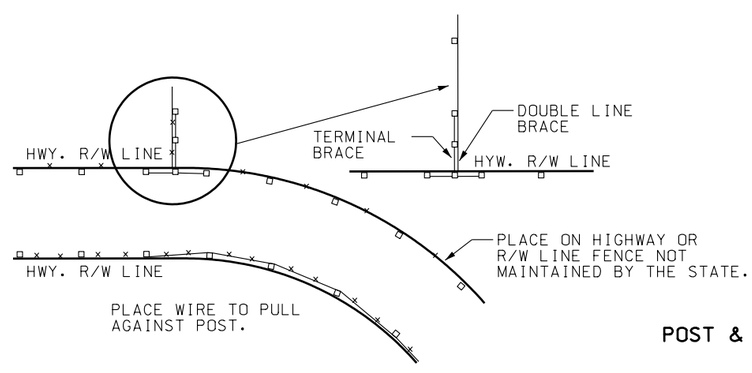

POST & WIRE LOCATION

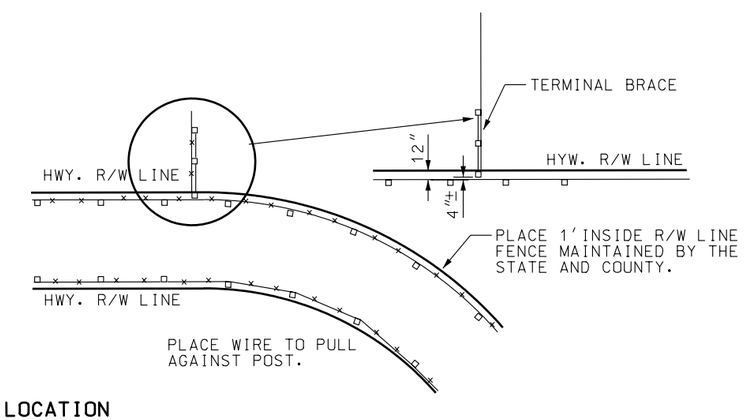

POST & WIRE LOCATION

NO.	DATE	APPR.	REMARKS

REVISIONS

UTAH DEPARTMENT OF TRANSPORTATION
STANDARD DRAWINGS FOR ROAD AND BRIDGE CONSTRUCTION
SALT LAKE CITY, UTAH

RECOMMENDED FOR APPROVAL — JULY 03,2002 DATE

CHAIRMAN STANDARDS COMMITTEE APPROVED — JULY 03,2002 DATE

DEPUTY DIRECTOR

RIGHT OF WAY FENCE AND GATES (WOOD POST)

STANDARD DRAWING TITLE

STD DWG

FG 1B

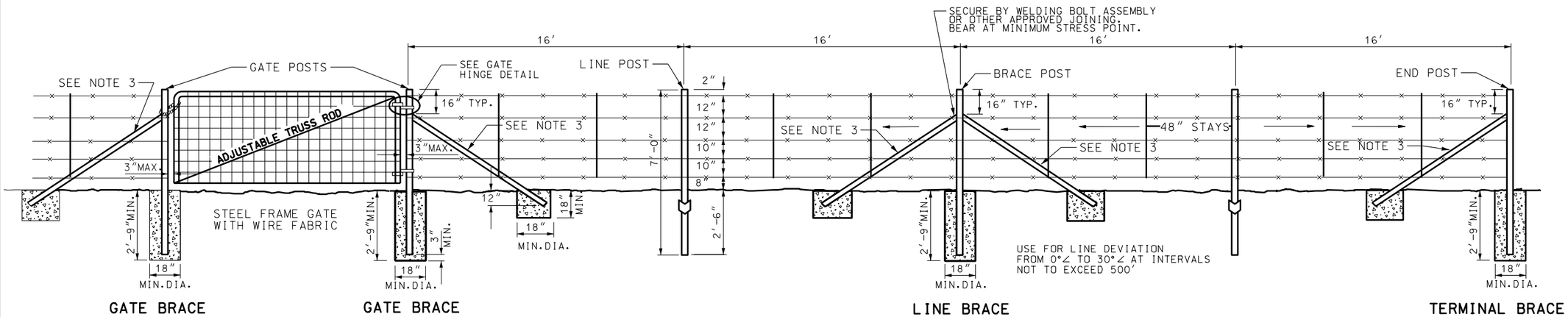

GATE BRACE GATE BRACE LINE BRACE TERMINAL BRACE

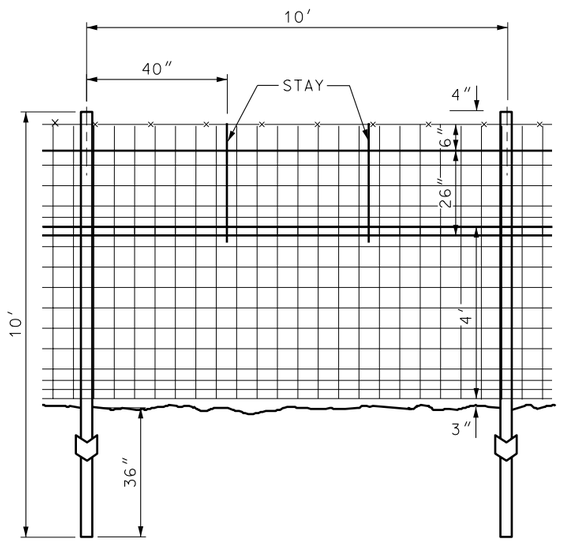

RIGHT OF WAY FENCE TYPE G (DEER BARRIER)

FOR FENCETYPES A, B, D, E AND F POST SIZE, SPACING AND BRACING ARE AS SHOWN IN TYPICAL INSTALLATION ABOVE. SPACE 2 STAYS EVENLY BETWEEN EACH SET OF POSTS.

INSTALLATION WITH METAL POSTS
(TYPICAL)

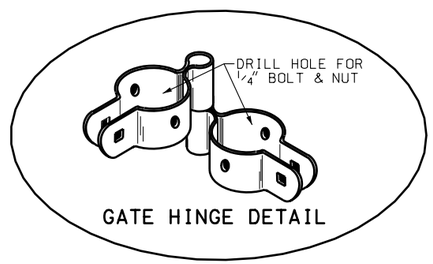

GATE HINGE DETAIL

NOTES:

1. SET METAL POSTS IN CLASS "B" CONCRETE.
2. LINE POSTS FOR TYPE A,B,D,,E & F FENCE
   A-TEE CHANNELS OR "Y" OR "U" SECTIONS, MINIMUM WEIGHT 1.33 lb/ft. ON LENGTH.
   B-STEEL PIPES,1.900 inch OUTSIDE DIAMETER SCHEDULE 40 PIPE, WEIGHT 2.72 lb/ft OF LENGTH OR HIGH TENSILE TRIPLE COATED STEEL PIPE, WEIGHT 2.23 lb/ft OF LENGTH.
   C-ALTERNATE LINE POSTS APPROVED BY THE ENGINEER TO HAVE A MINIMUM RESISTING SECTION MODULUS OF 0.32 in^3 PERPENDICULAR AND 0.12 in^3 PARALLEL TO THE FENCE LINE. ANCHOR PLATES TO POSTS, MINIMUM SURFACE AREA OF 20 in^2, MINIMUM 18 GAUGE THICKNESS AND MINIMUM WEIGHT 0.67 lb/EACH
3. BRACE AND CORNER PSTS (ASTM A 36)
   A-BRACE AND CORNER POSTS FOR TYPE A,B,D,E & F FENCES USE 2½″x 2½″x ¼″ ANGLES, MINIMUM WEIGHT 4.10 lb/ft.
   B-BRACES FOR TYPE A,B,D,E& F FENCES, USE 2″x 2″ x ¼″ ANGLES, MINIMUM WEIGHT 3.19 lb/ft.
   C-PIPES USED AS CORNER AND BRACE POSTS, USE 2.375 in. OUTSIDE DIAMETER, WEIGHT 3.65lb/ft. OR HIGH TENSILE TRIPLE COATED STEEL, 2.375 inch OUTSIDE DIAMETER WEIGHT 3.11 lb/ft.
4. LINE POSTS FOR TYPE A,B,D,E & F FENCE: 7′-0″ LENGTH
   LINE POSTS FOR TYPE G FENCE: 10′-0″
5. TERMINATE MESH AND BARBER WIRE AT EACH CORNER POST.
6. USE CORNER POST BRACES ON ALL FENCE LINE DEVIATIONS GREATER THAN 30°. USE CORNER POST BRACES ON TYPE G FENCE WITH DEVIATIONS GREATER THAN 15°.
7. GALVANIZE METAL PER (ASTM A 702) OR PAINTED (ASTM A 123)

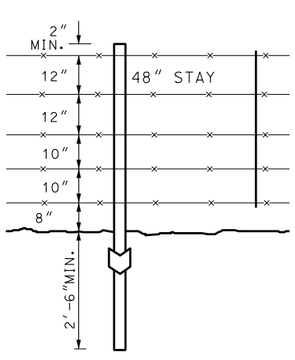

TYPE A

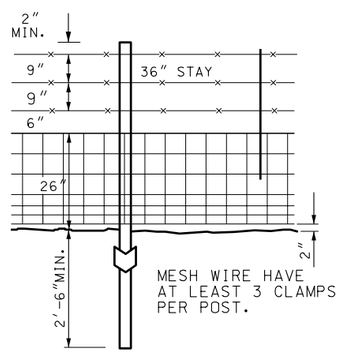

TYPE B

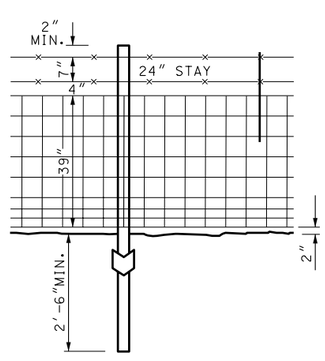

TYPE D

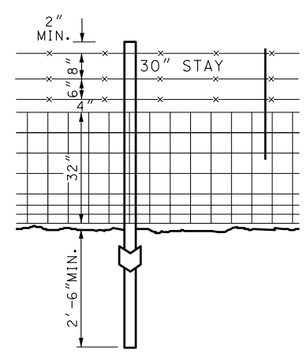

TYPE E

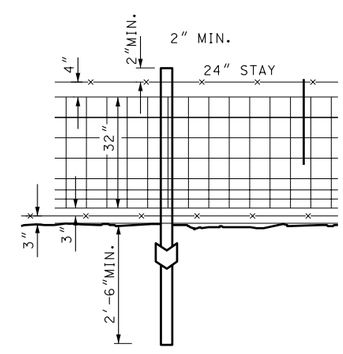

TYPE F

TO BE INSTALLED IN DEER COUNTRY

NO.	DATE	APPR.	REMARKS

REVISIONS

UTAH DEPARTMENT OF TRANSPORTATION
STANDARD DRAWINGS FOR ROAD AND BRIDGE CONSTRUCTION
SALT LAKE CITY, UTAH

RECOMMENDED FOR APPROVAL — JULY 03,2002 DATE

CHAIRMAN STANDARDS COMMITTEE APPROVED — JULY 03,2002 DATE

DEPUTY DIRECTOR

RIGHT OF WAY FENCE AND GATES (METAL POST)

STANDARD DRAWING TITLE

STD DWG FG 2A

INSTALLATION WITH METAL POSTS
(TYPICAL)

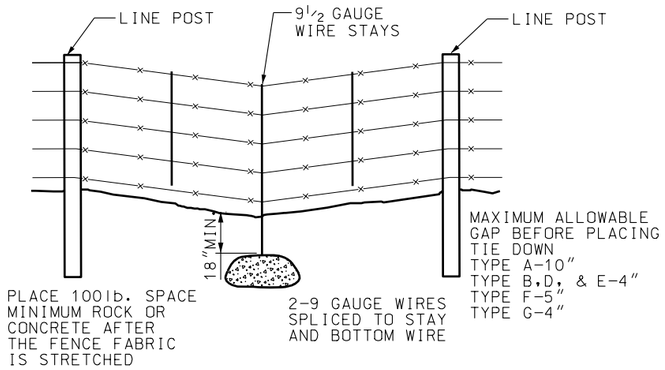

TYPICAL SAG SECTION

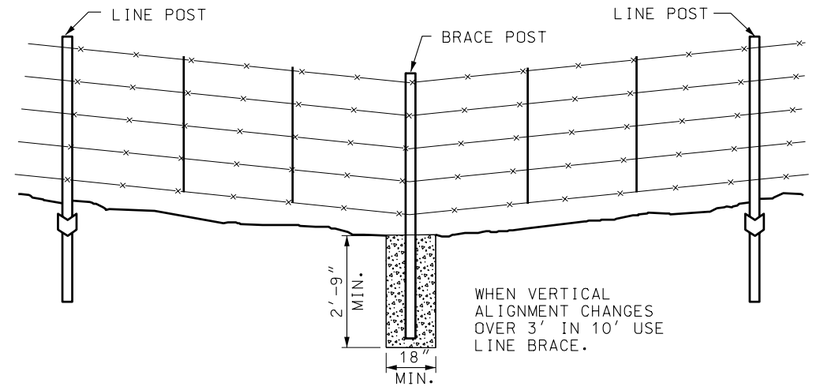

TYPICAL VERTICAL ALIGNMENT CHANGE

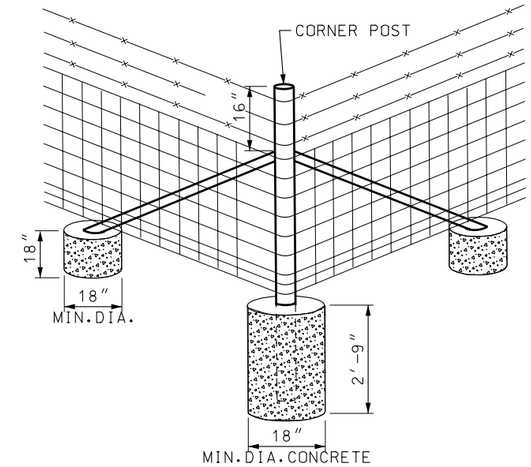

CORNER BRACE
SEE NOTE #6 STD DWG FG 2A

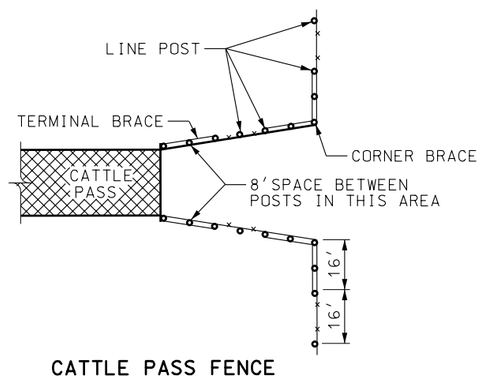

CATTLE PASS FENCE DETAIL

DEER COUNTRY
NOTE: LAP THE 47″ & 26″ MESH WIRE 2″. TIE OR CLAMP 47″ & 26″ MESH WIRE TOGETHER. THE SPACING NOT TO EXCEED 2′-0″ SPACING OF CONNECTINGS.

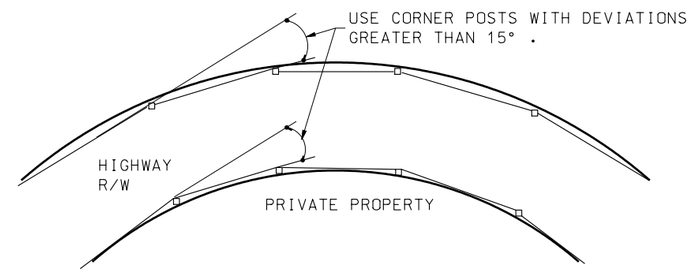

DEER BARRIER ON CURVES
SEE NOTE #6 STD DWG FG 2A

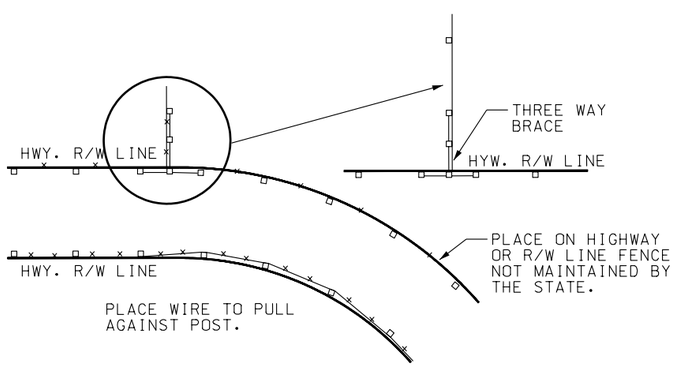

POST & WIRE LOCATION

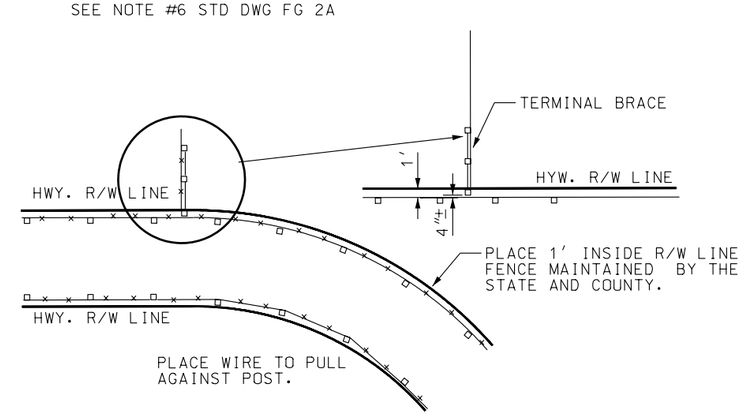

POST & WIRE LOCATION

NO.	DATE	APPR.	REMARKS

REVISIONS

UTAH DEPARTMENT OF TRANSPORTATION
STANDARD DRAWINGS FOR ROAD AND BRIDGE CONSTRUCTION
SALT LAKE CITY, UTAH

RECOMMENDED FOR APPROVAL — JULY 03,2002 DATE

CHAIRMAN STANDARDS COMMITTEE APPROVED — JULY 03,2002 DATE

DEPUTY DIRECTOR

RIGHT OF WAY
FENCE AND GATES
(METAL POST)

STANDARD DRAWING TITLE

STD DWG
FG 2B

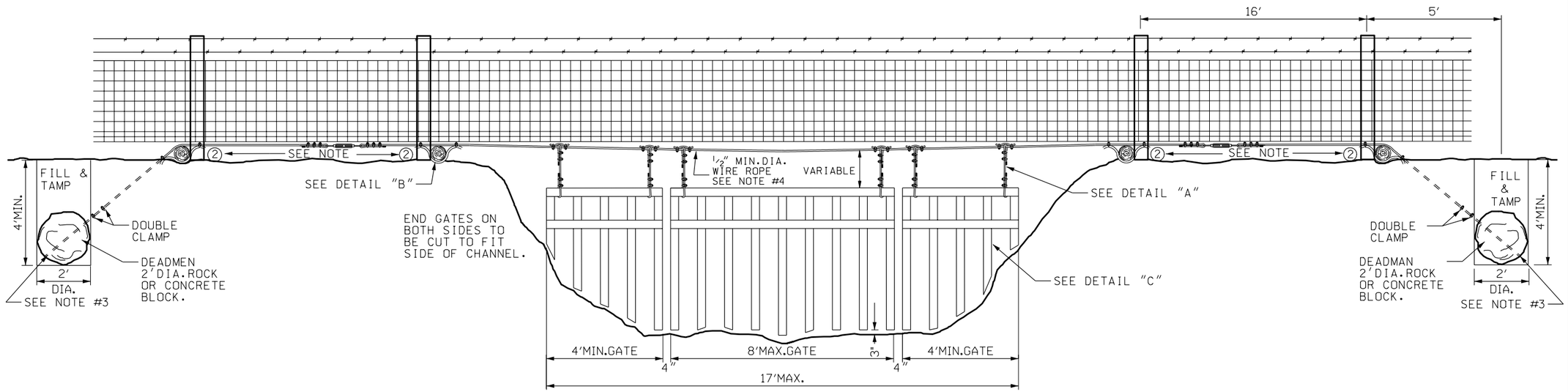

INSTALLATION DETAIL

DETAIL "B"

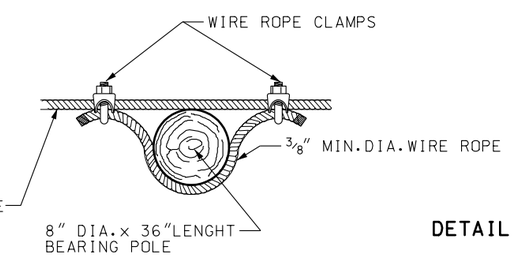

DETAIL "A"

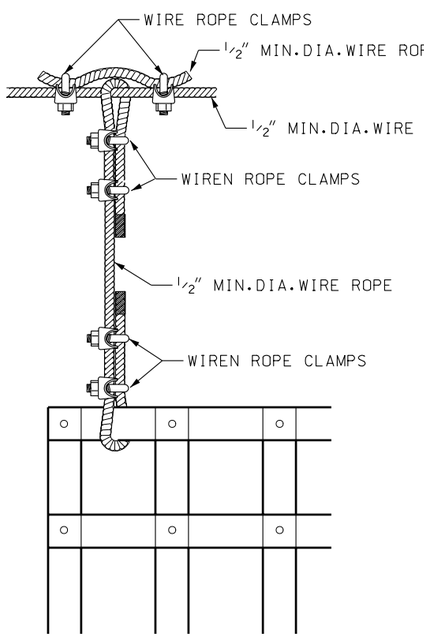

DETAIL "C"

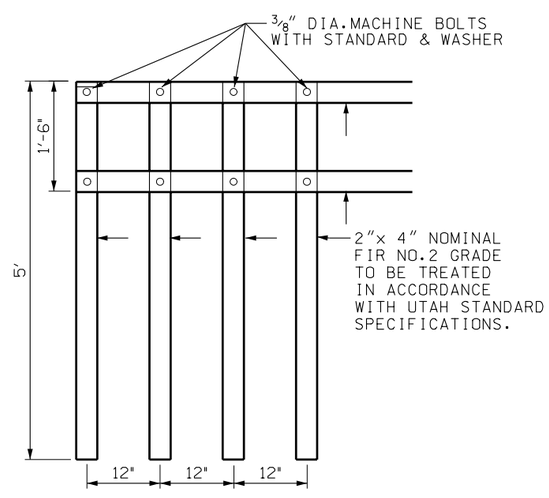

NOTES:

1. INSTALL BEARING POLES,DEADMAN AND TURN BUCKLE THE SAME ON BOTH SIDES ON THE CHANNEL.
2. INSTALL WIRE ROPE ON THE UPSTREAM SIDE OF THE FENCE POSTS.
3. WRAP WIRE ROPE AROUND ROCK AND CLAMP WITH A DOUBLE CLAMP.
4. USE ½″ DIA. WIRE 6″× 12″ WITH A BREAKING STRENGTH OF 10000 lbs.

DETAIL "D"

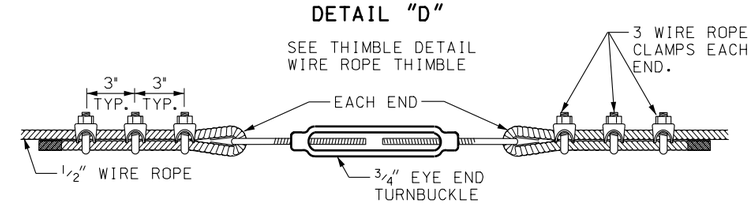

THIMBLE DETAIL

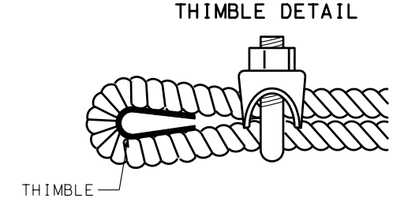

REVISIONS				
NO.	DATE	APPR.		REMARKS

UTAH DEPARTMENT OF TRANSPORTATION
STANDARD DRAWINGS FOR ROAD AND BRIDGE CONSTRUCTION
SALT LAKE CITY, UTAH

RECOMMENDED FOR APPROVAL — JULY 03,2002 DATE

CHAIRMAN STANDARDS COMMITTEE APPROVED — JULY 03,2002 DATE

DEPUTY DIRECTOR

STANDARD DRAWING TITLE

SWING GATES
TYPE 1
FOR GATES LESS THAN 17′

STD DWG
FG 3

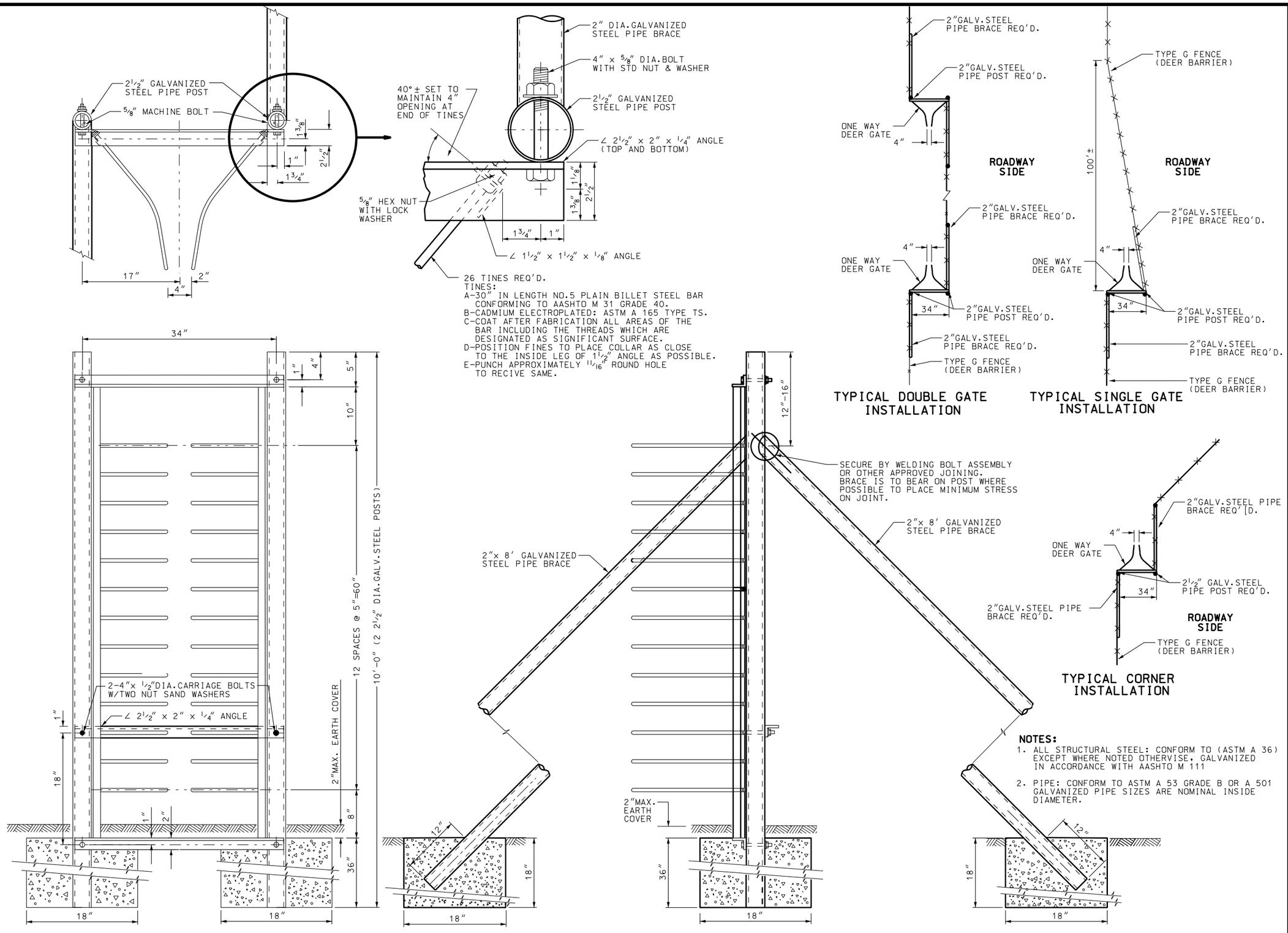

NOTES:

1. ALL STRUCTURAL STEEL: CONFORM TO (ASTM A 36) EXCEPT WHERE NOTED OTHERVISE, GALVANIZED IN ACCORDANCE WITH AASHTO M 111
2. PIPE: CONFORM TO ASTM A 53 GRADE B OR A 501 GALVANIZED PIPE SIZES ARE NOMINAL INSIDE DIAMETER.

NO.	DATE	APPR.	REVISIONS	REMARKS

UTAH DEPARTMENT OF TRANSPORTATION

STANDARD DRAWINGS FOR ROAD AND BRIDGE CONSTRUCTION
SALT LAKE CITY, UTAH

RECOMMENDED FOR APPROVAL — JULY 03,2002 DATE

CHAIRMAN STANDARDS COMMITTEE APPROVED — JULY 03,2002 DATE

DEPUTY DIRECTOR

STANDARD DRAWING TITLE

DEER GATES

STD DWG

FG 4

NOTES:

1. ON BOTH SIDES OF CHANNEL INSTALL BEARING PIPES, CONCRETE BLOCKS AND TURN BUCKLES.
2. INSTALLED WIRE ROPE ON THE UPSTREAM SIDE OF THE POSTS. USE 1/2" DIA. WIRE 6"x 12" WITH BREAKING STRENGTH OF 10000 lbs.

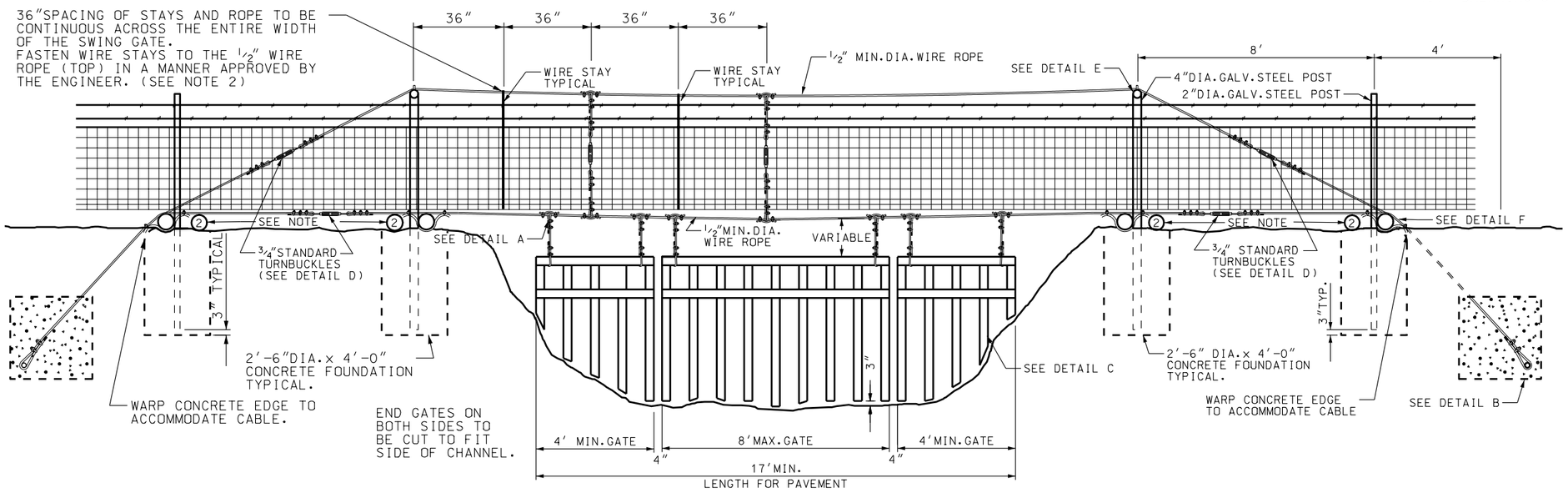

INSTALLATION DETAIL

DETAIL G

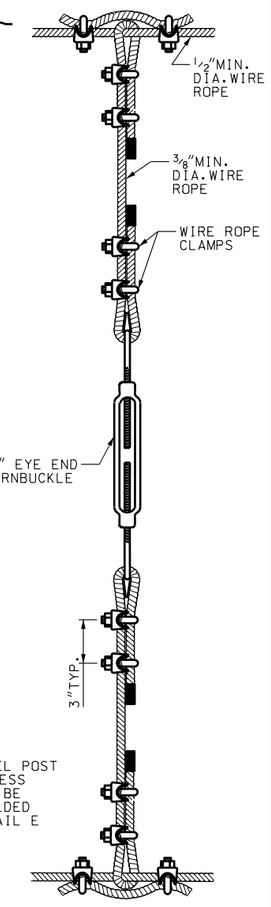

DETAIL B

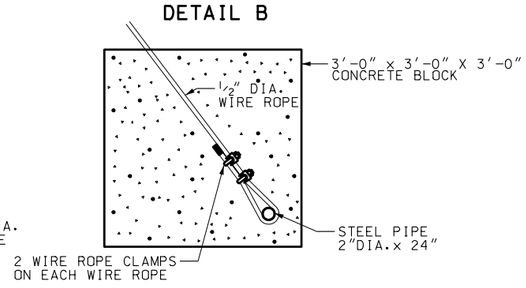

DETAIL A

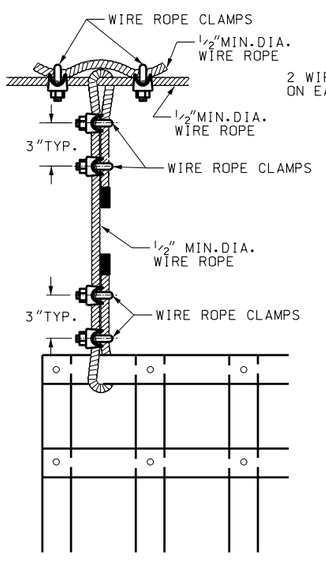

DETAIL D

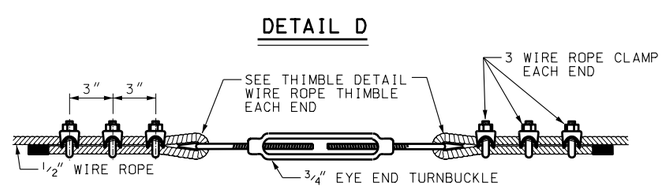

DETAIL F

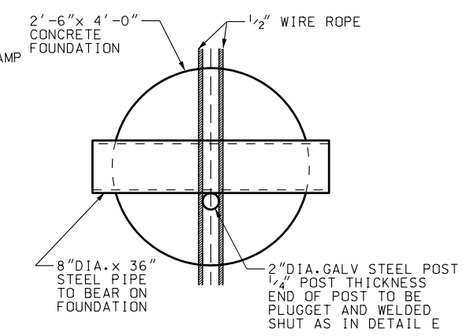

DETAIL C

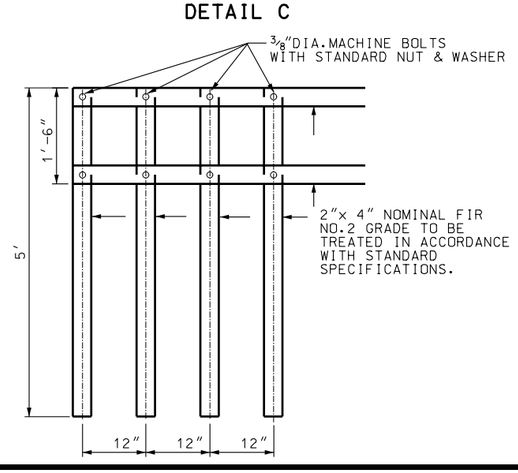

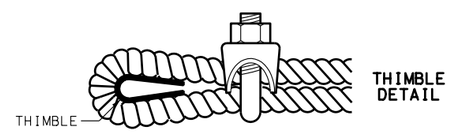

DETAIL E

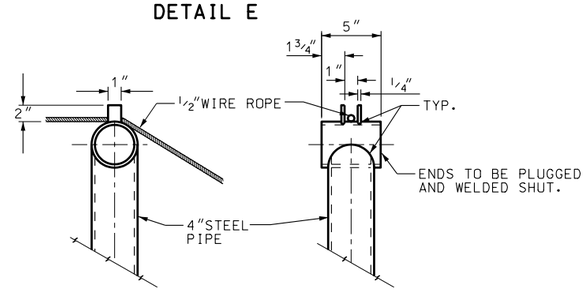

NO.	DATE	APPR.	REMARKS

REVISIONS

UTAH DEPARTMENT OF TRANSPORTATION
STANDARD DRAWINGS FOR ROAD AND BRIDGE CONSTRUCTION
SALT LAKE CITY, UTAH

RECOMMENDED FOR APPROVAL — JULY 03,2002 DATE

CHAIRMAN STANDARDS COMMITTEE APPROVED — JULY 03,2002 DATE

DEPUTY DIRECTOR

STANDARD DRAWING TITLE

SWING GATES TYPE II

FOR GATES WIDER THAN 17'

STD DWG

FG 5

NOTES:

1. POSTS: SCHEDULE 40 PIPE. TRIPLE COATED HIGH TENSILE STEEL PIPE OR ROLL-FORMED C-SECTION OF THE SIZE SHOWN IN THE CHART AND AS DEFINED IN THE STANDARD SPECIFICATION. WEIGHT IN lb/ft WITH TOLERANCE OF 5 PERCENT. OTHER TYPES OF POSTS WITH EQUAL OR GREATER SECTION MODULUS MAY BE USED IF APPROVED, IN ADVANCE, BY THE ENGINEER.
2. FABRIC HEIGHTS LESS THAN 5': TRUSS RODS AND BRACES NOT REQUIRED.

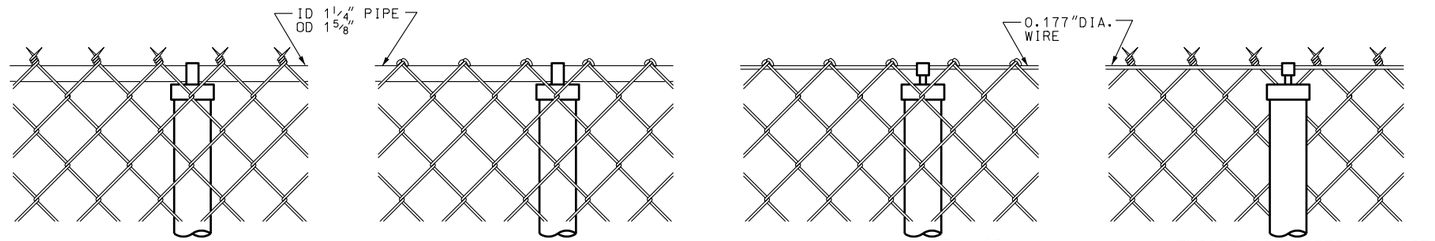

TWISTED & BARBED SELVAGE TYPE I

KNUCKLED SELVAGE TYPE II

KNUCKLED SELVAGE WITH TENSION WIRE TYPE III

TWISTED & BARBED SELVAGE WITH TENSION WIRE TYPE IV

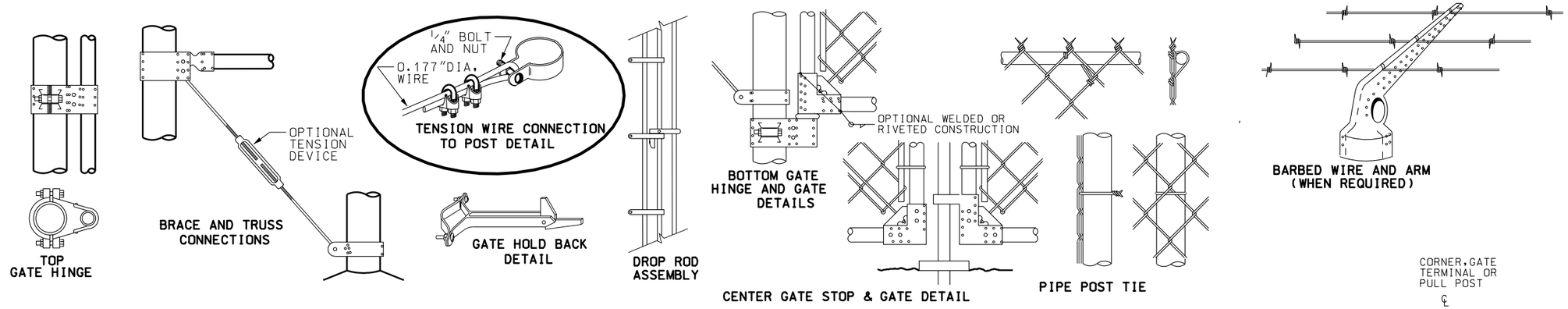

TOP GATE HINGE

BRACE AND TRUSS CONNECTIONS

TENSION WIRE CONNECTION TO POST DETAIL

GATE HOLD BACK DETAIL

DROP ROD ASSEMBLY

BOTTOM GATE HINGE AND GATE DETAILS

CENTER GATE STOP & GATE DETAIL

PIPE POST TIE

BARBED WIRE AND ARM (WHEN REQUIRED)

TYPICAL MULTIPLE BAY SEGMENT

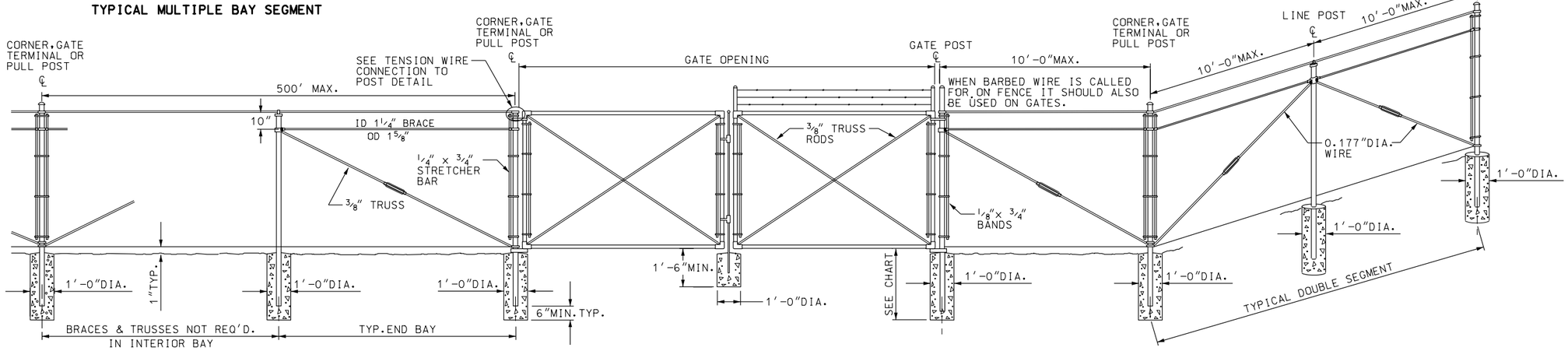

HEIGHT	GATE OPENING	GATE POST	GATE FRAME
UNDER 6'	SINGLE TO 6' OR DOUBLE TO 12'	2"	1"
	SINGLE OVER 6' TO 8' OR DOUBLE OVER 12' TO 16'	2½"	1½"
	SINGLE OVER 8' TO 12' OR DOUBLE 16' TO 24'	3½"	
6' AND OVER *	SINGLE TO 6' OR DOUBLE TO 12'	2½"	1½"
	SINGLE OVER 6' TO 13' OR DOUBLE OVER 12' TO 24'	3½"	
	SINGLE OVER 13' TO 18' OR DOUBLE OVER 24' TO 36'	6"	
	SINGLE OVER 18' OR DOUBLE OVER 36'	8"	

* GATES OVER 6' IN HEIGHT AND WIDER THAN 12' WILL REQUIRE 3 INDUSTRIAL PRESSED STEEL HINGES.

HEIGHT OF FABRIC	DEPTH OF POSTS	LENGTH OF END CORNER OR PULL POSTS	LENGTH OF LINE POSTS	SIZE OF POSTS									
				END, CORNER & PULL POSTS				LINE POST MIN. SIZE					
				NOM. SIZE	OUTSIDE DIA.	PIPE WEIGHT		NOM. SIZE	OUTSIDE DIA.	PIPE WEIGHT		OUTSIDE DIMENSIONS C-SECTION	WT/FT
						ASTM A 120	TRIPLE COAT			ASTM A 120	TRIPLE COAT		
7'	3'	10'	9'-8"	2½"	2.875"	5.79	4.64	2"	2.375"	3.65	3.11	1.875 x 1.625	2.28
6'	3'	9'	8'-8"	2"	2.375"	3.65	3.11	1½"	1.900"	2.72	2.23	1.875 x 1.625	1.85
5'	3'	8'	7'-8"	2"	2.375"	3.65	3.11	1½"	1.900"	2.72	2.23	1.875 x 1.625	1.85
4'	2'	6'	5'-8"	2"	2.375"	3.65	3.11	1½"	1.900"	2.72	2.23	1.875 x 1.625	1.85
3'	2'	5'	4'-8"	2"	2.375"	3.65	3.11	1½"	1.900"	2.72	2.23	1.875 x 1.625	1.85

NO.	DATE	APPR.	REMARKS

REVISIONS

UTAH DEPARTMENT OF TRANSPORTATION
STANDARD DRAWINGS FOR ROAD AND BRIDGE CONSTRUCTION
SALT LAKE CITY, UTAH

RECOMMENDED FOR APPROVAL — JULY 03, 2002 DATE

CHAIRMAN STANDARDS COMMITTEE APPROVED — JULY 03, 2002 DATE

DEPUTY DIRECTOR

STANDARD DRAWING TITLE: CHAIN LINK FENCE

STD DWG FG 6

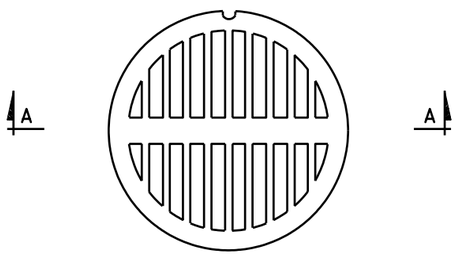

GRATED COVER PLAN

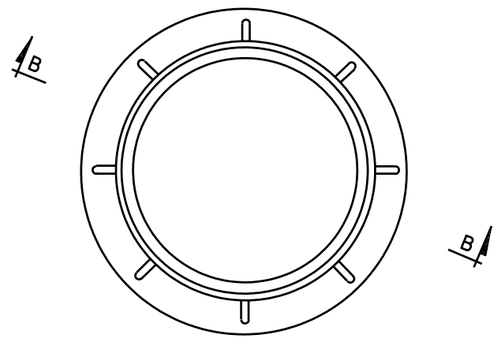

FRAME PLAN

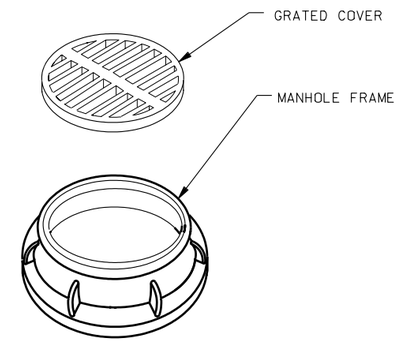

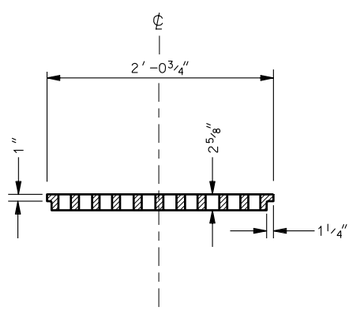

SECTION A-A

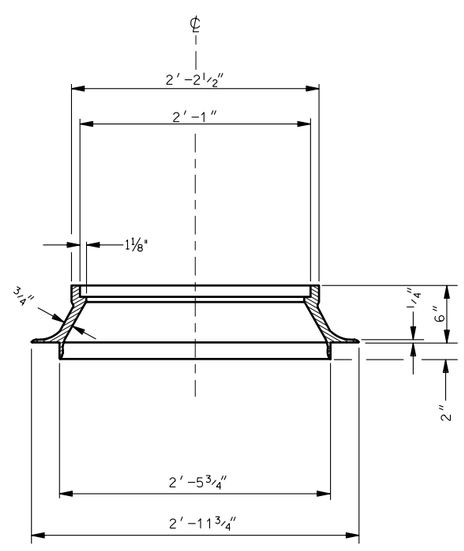

SECTION B-B

NOTES:

1. MANHOLE FRAME AND COVER FURNISHED IN CAST GRAY IRON CONFORMING TO AASHTO DESIGNATION M 105, CLASS 30B.
2. USE PRECAST CONCRETE GRADE RINGS TO ACHIVE FUNISH GRADE ELEVATION. PRECAST GRADE ARE FURNISHED IN HEIGHTS OF 4″, 6″ AND 8″, TOTAL HEIGHT OF GRADE RINGS NOT TO EXCEED 1′-0″. CONFORM ALL PRECAST GRADE RINGS TO AASHTO DESIGNATION M 199.
3. DIMENSION OF GRATE OPENINGS MAY VARY AMONG MANUFACTURES. SUBMIT SHOP DRAWING FOR APPROVAL PRIOR TO INSTALLATION.
4. ESTIMATED WEIGHT OF FRAME AND COVER 385 LBS.

DESIGN DATA

MS 18 (HS 20) OR INTERSTATE ALTERNATE LOADING IN ACCORDANCE WITH CURRENT AASHTO AND INTERIM SPECIFICATIONS.

REVISIONS

NO.	DATE	APPR.	REMARKS

UTAH DEPARTMENT OF TRANSPORTATION
STANDARD DRAWINGS FOR ROAD AND BRIDGE CONSTRUCTION
SALT LAKE CITY, UTAH

RECOMMENDED FOR APPROVAL — JULY 03,2002 DATE

CHAIRMAN STANDARDS COMMITTEE APPROVED — JULY 03,2002 DATE

DEPUTY DIRECTOR

MANHOLE FRAME AND GRATED COVER

STANDARD DRAWING TITLE

STD DWG

GF 1

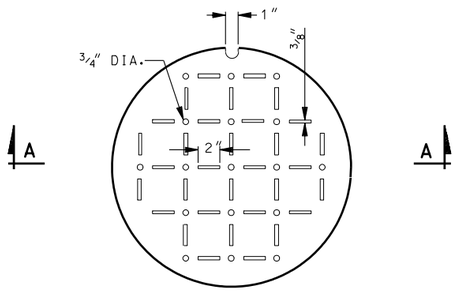

SOLID COVER PLAN

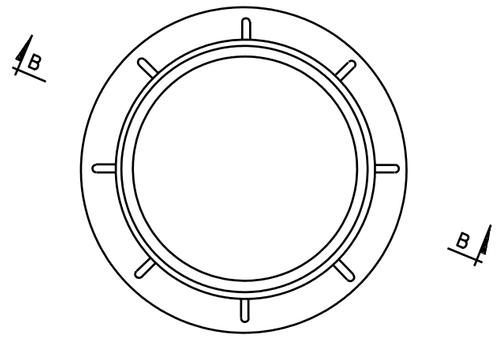

FRAME PLAN

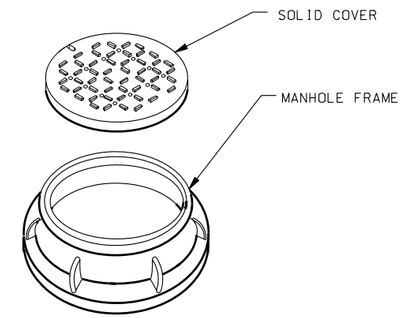

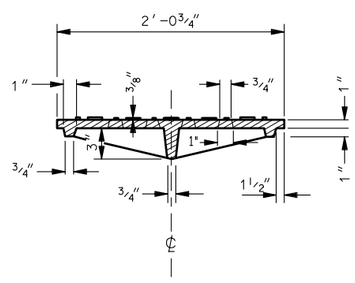

SECTION A-A

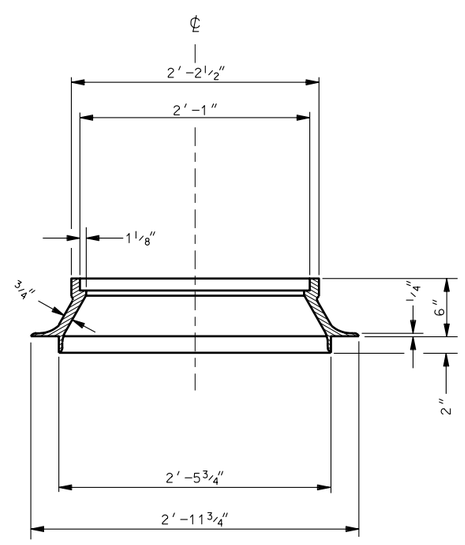

SECTION B-B

NOTES:

1. FURNISH MANHOLE FRAME AND COVER IN CAST GRAY IRON CONFORMING WITH AASHTO DESIGNATION M 105, CLASS 30B.
2. USE PRECAST CONCRETE GRADE RINGS TO ACHIEVE FINISH GRADE ELEVATION. PRECAST GRADE RING ARE FURNISHED IN HEIGHTS OF 4",6" AND 8". TOTAL HEIGHT OF GRADE RINGS NOT TO EXCEED 1'-0". ALL PRECAST GRADE RINGS CONFORM WITH AASHTO DESIGNATION M 199.
3. ESTIMATED WEIGHT OF FRAME AND COVER 402 LBS.

DESIGN DATA

MS-18 (HS-20) OR INTERSTATE ALTERNATE LOADING IN ACCORDANCE WITH CURRENT AASHTO AND INTERIM SPECIFICATIONS.

REVISIONS

NO.	DATE	APPR.	REMARKS

UTAH DEPARTMENT OF TRANSPORTATION
STANDARD DRAWINGS FOR ROAD AND BRIDGE CONSTRUCTION
SALT LAKE CITY, UTAH

RECOMMENDED FOR APPROVAL — JULY 03,2002 DATE

CHAIRMAN STANDARDS COMMITTEE APPROVED — JULY 03,2002 DATE

DEPUTY DIRECTOR

MANHOLE FRAME AND SOLID COVER

STANDARD DRAWING TITLE

STD DWG
GF 2

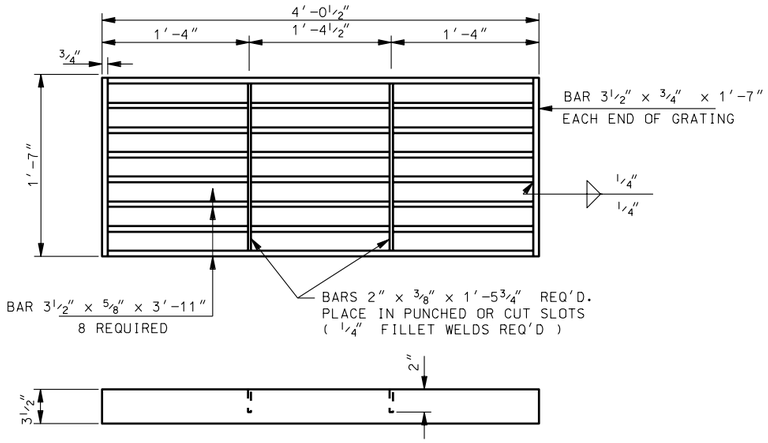

STANDARD GRATING

GRATE WEIGHT: 272 LBS

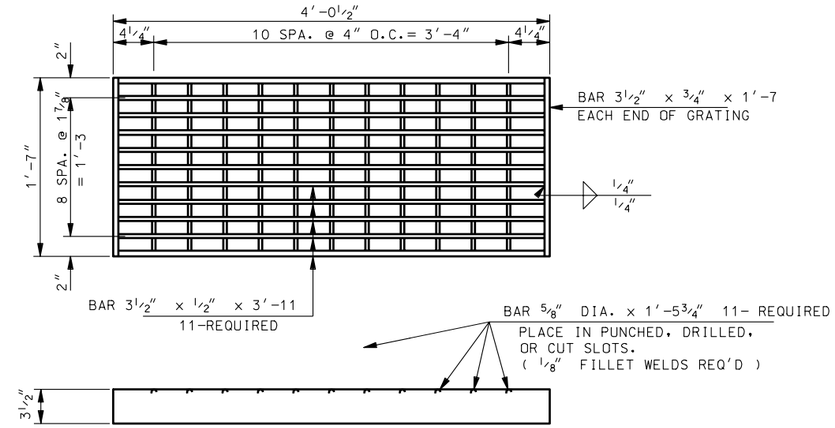

BICYCLE-SAFE GRATING

GRATE WEIGHT: 297 LBS

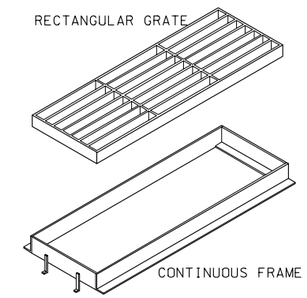

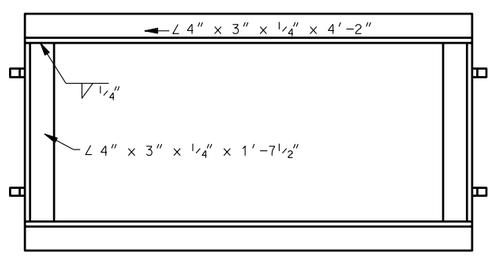

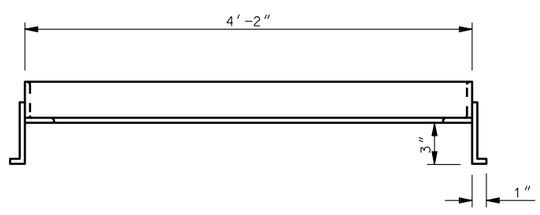

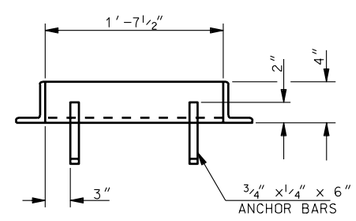

FRAME

FRAME WEIGHT: 68 LBS

NOTES:

1. HOT-DIP GALVANIZE GRATING AND FRAME AFTER FABRICATION IN ACCORDANCE WITH AASHTO DESIGNATION M 111 (ASTM A 123).
2. STRUCTURAL STEEL GRATING: USE STRUCTURAL CARBON STEEL CONFORMING TO AASHTO DESIGNATION M 270, GRADE 36 (ASTM A 709 GRADE 36).
3. SEE ROADWAY PLANS FOR TYPE OF GRATE REQUIRED.
4. ALL JOINTS REQUIRE 1/4" FILLET WELDS UNLESS NOTED OTHERWISE.

DESIGN DATA

MS 18 (HS-20) OR INTERSTATE ALTERNATE LOADING IN ACCORDANCE WITH CURRENT ASSHTO AND INTERIM SPECIFICATIONS.

STRUCTURAL STEEL: fs = 20,000 psi

REVISIONS

NO.	DATE	APPR.	REMARKS

UTAH DEPARTMENT OF TRANSPORTATION
STANDARD DRAWINGS FOR ROAD AND BRIDGE CONSTRUCTION
SALT LAKE CITY, UTAH

RECOMMENDED FOR APPROVAL — JULY 03,2002 DATE

CHAIRMAN STANDARDS COMMITTEE APPROVED — JULY 03,2002 DATE

DEPUTY DIRECTOR

RECTANGULAR GRATE & FRAME

STANDARD DRAWING TITLE

STD DWG
GF 3

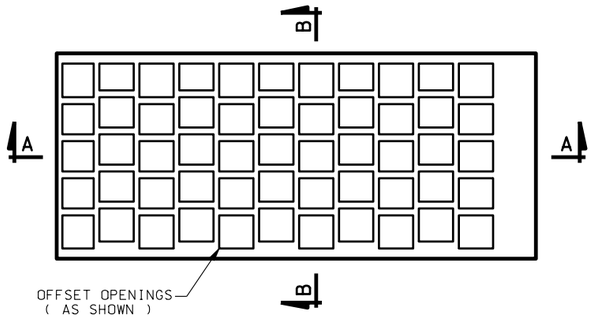

GRATE
WEIGHT: 266 LBS

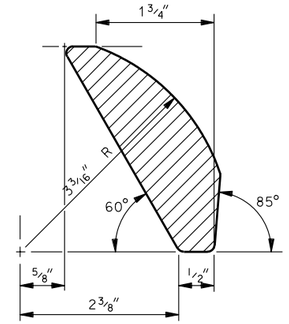

DETAIL "A"

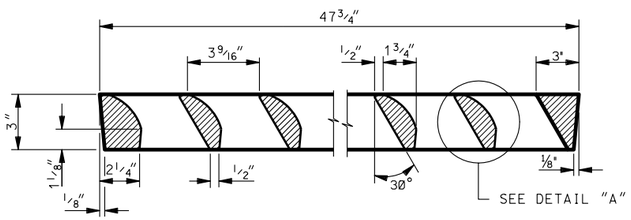

SECTION A-A

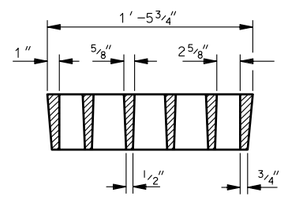

SECTION B-B

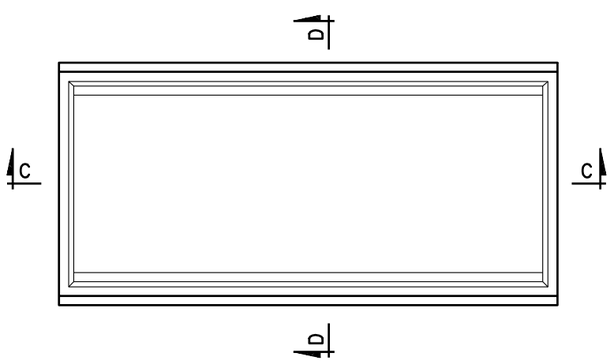

FRAME
WEIGHT: 160 LBS

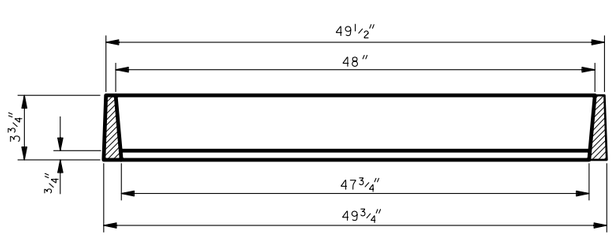

SECTION C-C

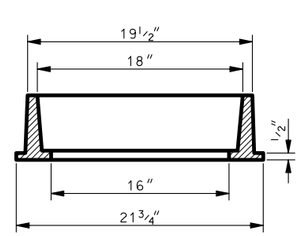

SECTION D-D

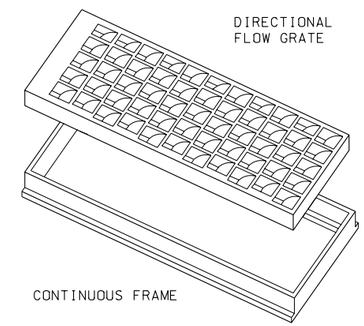

NOTES:

1. FURNISH GRATE AND FRAME IN EITHER DUCTILE IRON (ASTM A 536 GRADE 60) OR CAST GRAY IRON: AASHTO M 105, CLASS 30B (ASTM A 48).
2. INSTALLATION REQUIRES SUPPORT UNDER LONGITUDINAL AXIS OF FRAME, ORIENT GRADE WITH DIRECTION OF FLOW.

DESIGN DATA

MS 18 (HS-20) OR INTERSTATE ALTERNATE LOADING IN ACCORDANCE WITH CURRENT AASTO AND INTERIM SPECIFICATIONS.

DUCTILE IRON AND STRUCTURAL STEEL: fs = 20,000 psi

REVISIONS

NO.	DATE	APPR.	REMARKS

UTAH DEPARTMENT OF TRANSPORTATION
STANDARD DRAWINGS FOR ROAD AND BRIDGE CONSTRUCTION
SALT LAKE CITY, UTAH

RECOMMENDED FOR APPROVAL — JULY 03,2002 DATE

CHAIRMAN STANDARDS COMMITTEE APPROVED — JULY 03,2002 DATE

DEPUTY DIRECTOR

STANDARD DRAWING TITLE
DIRECTIONAL FLOW GRATE & FRAME

STD DWG
GF 4

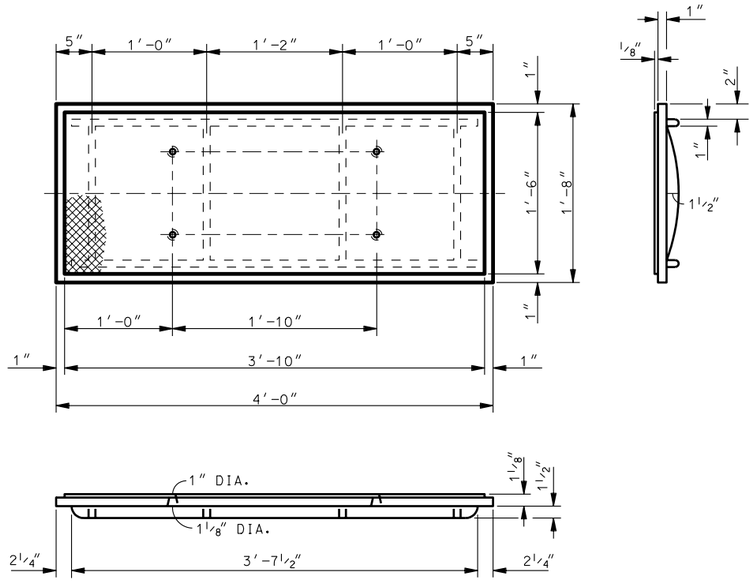

SOLID COVER DETAILS

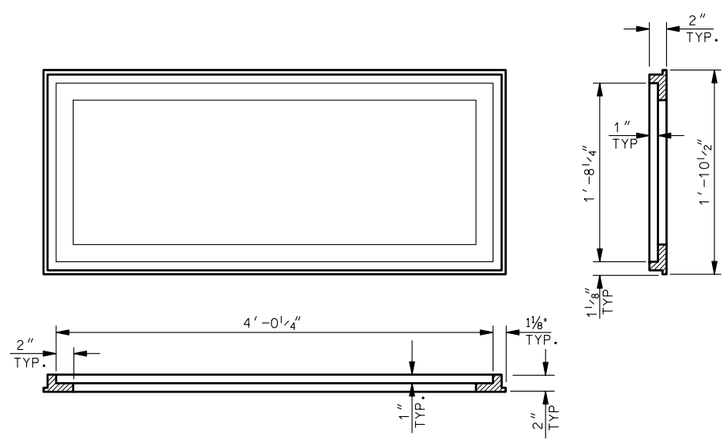

FRAME DETAILS

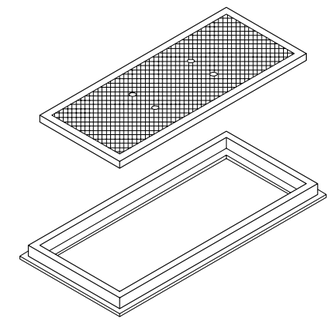

NOTES:

1. FURNISH SOLID COVER AND FRAME IN EITHER DUCTILE IRON (ASTM A 536, GRADE 60) OR CAST GRAY IRON: AASHTO M 105, CLASS 30B (ASTM A 48)
2. INSTALLATION REQUIRES SUPPORT UNDER LONGITUDINAL AXIS OF FRAME, ORIENT GRATE WITH DIRECTION OF FLOW.

DESIGN DATA

MS 18 (HS-20) OR INTERSTATE ALTERNATE LOADING IN ACCORDANCE WITH CURRENT AASHTO AND INTERIM SPECIFICATIONS.

DUCTILE IRON AND STRUCTURAL STEEL: Fs = 20,000 psi

REVISIONS

NO.	DATE	APPR.	REMARKS

UTAH DEPARTMENT OF TRANSPORTATION
STANDARD DRAWINGS FOR ROAD AND BRIDGE CONSTRUCTION
SALT LAKE CITY, UTAH

RECOMMENDED FOR APPROVAL — JULY 03,2002 DATE

CHAIRMAN STANDARDS COMMITTEE APPROVED — JULY 03,2002 DATE

DEPUTY DIRECTOR

SOLID COVER & FRAME

STANDARD DRAWING TITLE

STD DWG
GF 5

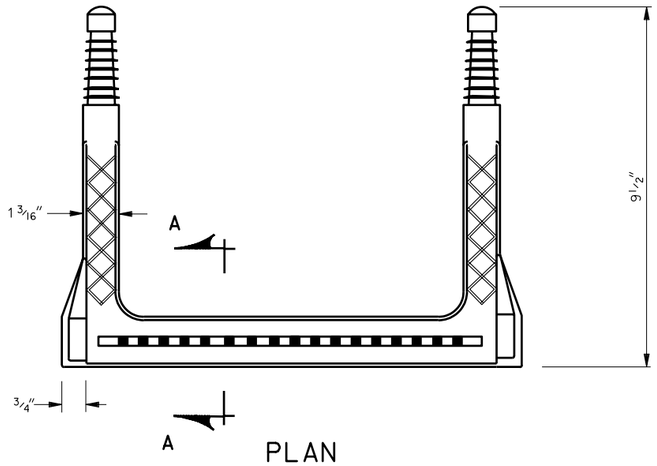

PLAN

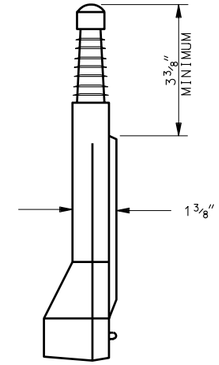

RIGHT SIDE VIEW

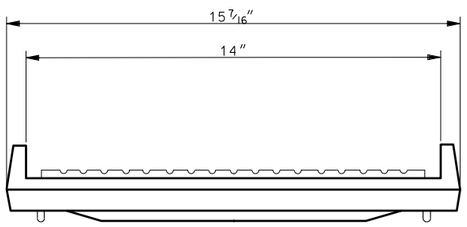

END VIEW

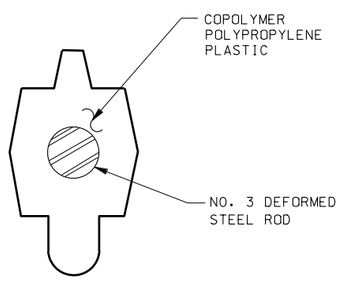

SECTION A-A

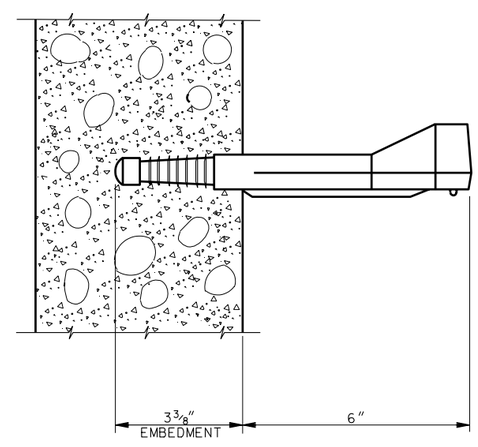

EMBEDMENT DETAIL

NOTES:

1. MANHOLE STEPS: CAPABLE OF WITHSTANDING A SINGLE CONCENTRATED LOAD OF 300 POUNDS APPLIED AT A DISTANCE OF 5 INCHES FROM THE FACE OF THE STRUCTURE WALL.
2. STEPS ARE TO BE VERTICALLY ALIGNED AND UNIFORMLY SPACED WITH A MINIMUM SPACING OF 12 INCHES AND A MAXIMUM SPACING OF 16 INCHES UNLESS SHOWN OTHERWISE ON STRUCTURE PLANS.
3. USE EITHER MANHOLE STEPS CAST-IN-PLACE, OR GROUTED INTO STRUCTURE WALL IN SUCH A MANNER AS TO PREVENT PULLOUT UNDER A LOAD OF 300 POUNDS APPLIED 5 INCHES FROM THE FACE OF THE STRUCTURE WALL.
4. STEEL REINFORCING OF MANHOLE STEPS: CONFORM TO AASHTO DESIGNATION M 31, GRADE 60, DEFORMED STEEL BAR. PLASTIC COATING OF MANHOLE STEPS: CONFORM TO ASTM DESIGNATION D 2146, TYPE II, GRADE 16906.
5. MANHOLE STEPS: CONFORM TO AASHTO DESIGNATION M 199 UNLESS NOTED OTHERWISE.
6. DIMENSIONS MAY VARY WITH MANUFACTURES DESIGN. USE ALTERNATIVE DESIGN WITH THE APPROVAL OF THE ENGINEER.

REVISIONS

NO.	DATE	APPR.	REMARKS

UTAH DEPARTMENT OF TRANSPORTATION
STANDARD DRAWINGS FOR ROAD AND BRIDGE CONSTRUCTION
SALT LAKE CITY, UTAH

RECOMMENDED FOR APPROVAL — JULY 03,2002 DATE

CHAIRMAN STANDARDS COMMITTEE APPROVED — JULY 03,2002 DATE

DEPUTY DIRECTOR

STANDARD DRAWING TITLE: MANHOLE STEPS

STD DWG
GF 6

STANDARD SCREW GATE SIZES FOR 5 FEET OF HEAD OR LESS												
A (INCH)	12	15	18	21	24	30	36	42	48	54	60	72
B (INCH)	12	12	12	21	12	18	24	24	24	30	30	36
	15	15	18		18	24	30	30	30	36	36	42
	18	18	24		24	30	36	36	36	42	42	48
	24	24	30		30	36	42	42	42	48	48	54
		30	36		36	42	48	48	48	54	54	60
					42	48	54	54	54	60	60	72
					48		60	72	60	72	72	
									72			

* FRAME HEIGHTS ARE AVAILABLE IN 1 FOOT INCREMENTS UP TO 10 FEET.
* OPENING SIZE : A X B

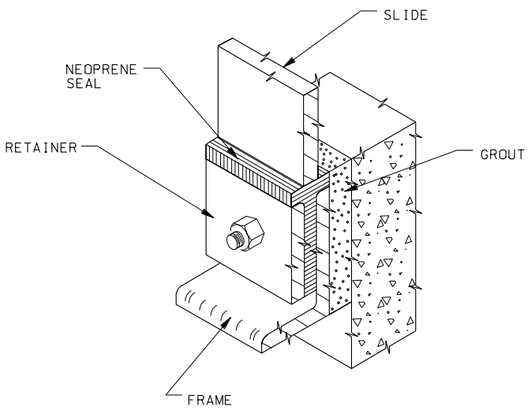

FLUSH BOTTOM CLOSURE

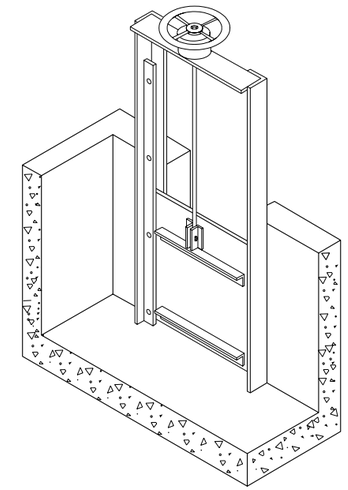

ISOMETRIC VIEW

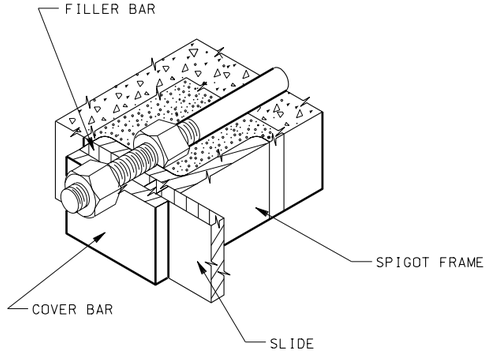

SPIGOT BACK MOUNTING

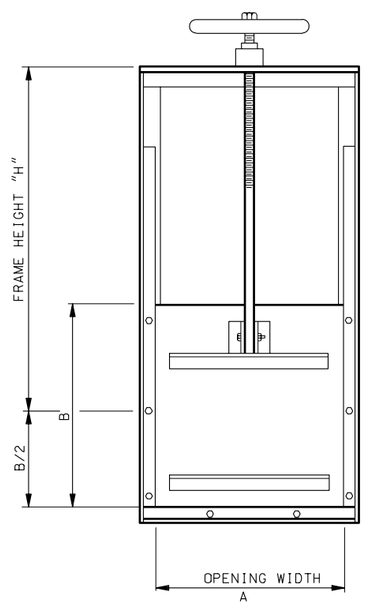

FRONT ELEVATION

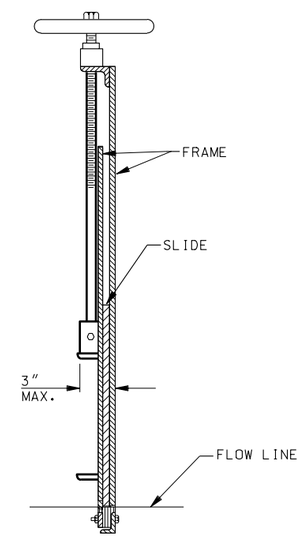

SECTION THRU

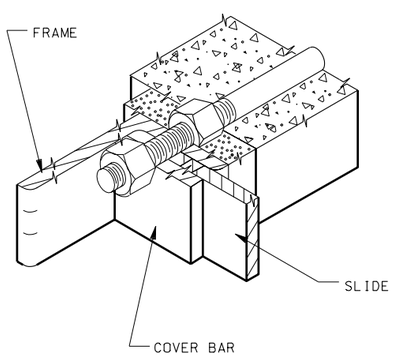

FLAT BACK MOUNTING

NOTES:

1. DESIGN SCREW GATES AND FRAMES FOR A MINIMUM FACE PRESSURE EQUAL TO 5 FEET OF HEAD ABOVE THE GATE OPENING AND ZERO BACK PRESSURE. SCREW GATES ARE INTENDED FOR A MAXIMUM OPENING SIZE OF 6 FT.x 6 FT.
2. CONSTRUCT SCREW GATE AND FRAME WITH CARBON STEEL CONFORMING TO AASHTO DESIGNATION M 183, GRADE 36, OPTIONAL GALVANIZING IN ACCORDANCE WITH AASHTO SPECIFICATION M 111.
3. MOUNT FRAME USING EITHER FLAT BACK OR SPIGOT BACK DETAILS DEPENDING ON CONDITIONS.
4. SUBMIT, IN ALL CASES, SHOP DRAWINGS FOR APPROVAL. SIMILAR SCREW GATES AND FRAMES CAN BE USED SUBJECT TO THE APPROVAL OF SHOP DRAWINGS.
5. SEE MANUFACTURES DETAILS FOR FRAME SIZES, AND PLACEMENT OF MOUNTING BOLTS.

DESIGN DATA

STRUCTURAL STEEL: fs = 20, 000 PSI
DESIGN SEATING HEAD : 0-5 FT.

REVISIONS

NO.	DATE	APPR.	REMARKS

UTAH DEPARTMENT OF TRANSPORTATION
STANDARD DRAWINGS FOR ROAD AND BRIDGE CONSTRUCTION
SALT LAKE CITY, UTAH

RECOMMENDED FOR APPROVAL — JULY 03,2002 DATE
CHAIRMAN STANDARDS COMMITTEE APPROVED — JULY 03,2002 DATE
DEPUTY DIRECTOR

STANDARD SCREW GATE & FRAME
STANDARD DRAWING TITLE

STD DWG
GF 7

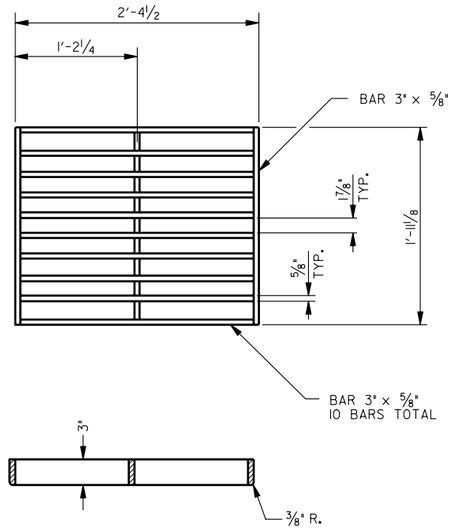

STANDARD GRATE

GRATE WEIGHT = 179 LBS.

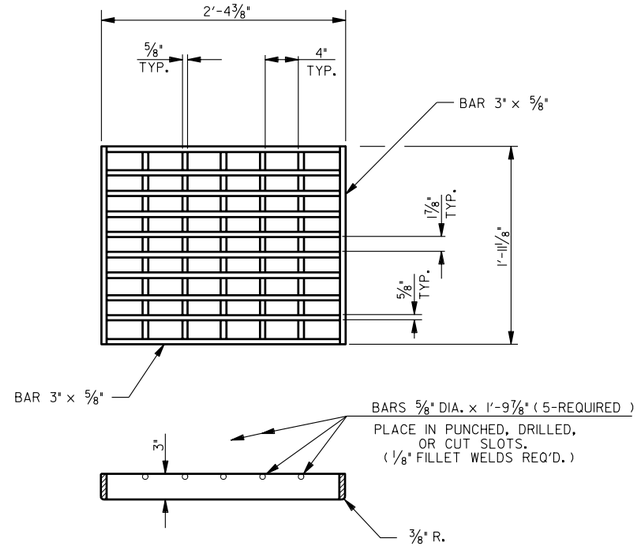

BICYCLE-SAFE GRATE

GRATE WEIGHT = 179 LBS.

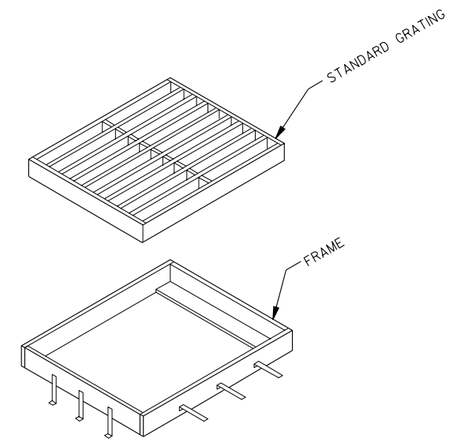

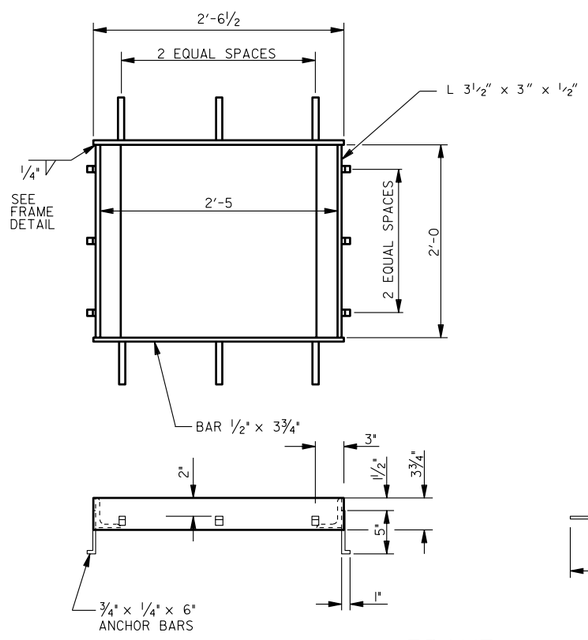

FRAME

FRAME WEIGHT = 77 LBS

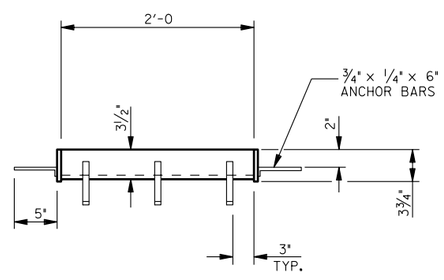

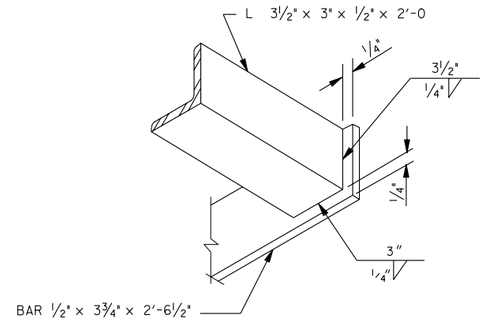

FRAME DETAIL

NOTES:

1. HOT-DIP GALVANIZE THE GRATING AND FRAME AFTER FABRICATION IN ACCORDANCE WITH AASHTO DESIGNATION M 111.
2. USE STRUCTURAL CARBON STEEL CONFORMING TO AASHTO DESIGNATION M 270 GRADE 36 FOR STRUCTURAL STEEL GRATING.
3. SEE ROADWAY PLANS FOR LOCATION AND NUMBER OF GRATES REQUIRED.
4. WELD ALL JOINTS WITH A ¼" FILLET WELD UNLESS NOTED OTHERWISE.

DESIGN DATA

GRATE AND FRAME: MEET HS-20 OR INTERSTATE ALTERNATE LOADING IN ACCORDANCE WITH AASHTO SPECIFICATIONS WHICH ARE IN EFFECT AT DATE OF REQUEST FOR BIDS.

STRUCTURAL STEEL: Fs=20,000psi

REVISIONS

NO.	DATE	APPR.	REMARKS

UTAH DEPARTMENT OF TRANSPORTATION
STANDARD DRAWINGS FOR ROAD AND BRIDGE CONSTRUCTION
SALT LAKE CITY, UTAH

RECOMMENDED FOR APPROVAL — JULY 03,2002 DATE

CHAIRMAN STANDARDS COMMITTEE APPROVED — JULY 03,2002 DATE

DEPUTY DIRECTOR

2' x 2'
GRATE AND FRAME

STANDARD DRAWING TITLE

STD DWG
GF 8

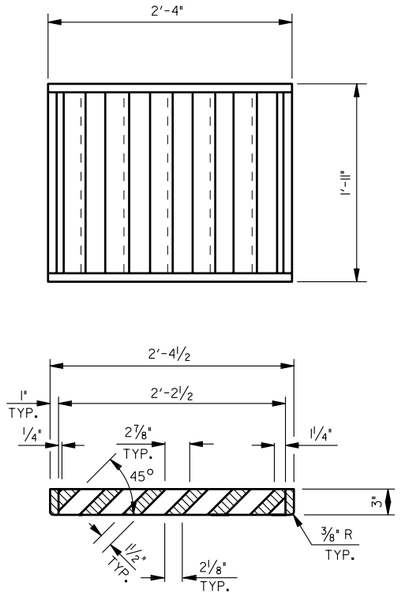

GRATE

GRATE WEIGHT = 410 LBS.

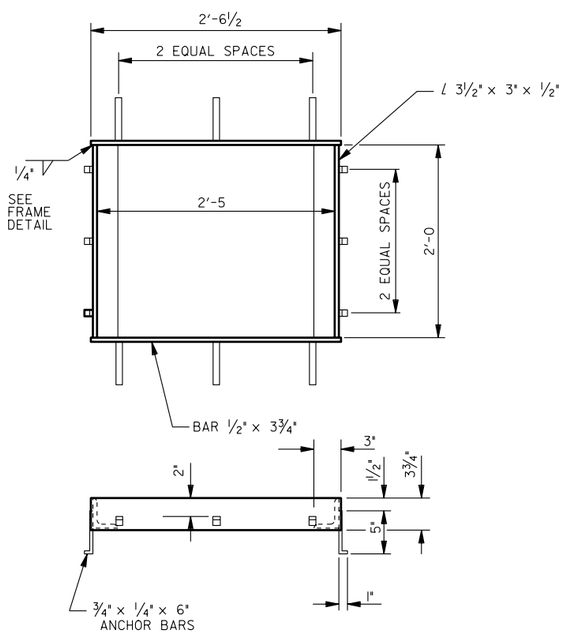

FRAME

FRAME WEIGHT = 77 LBS.

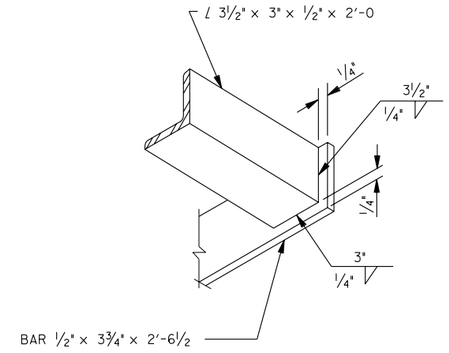

FRAME DETAIL

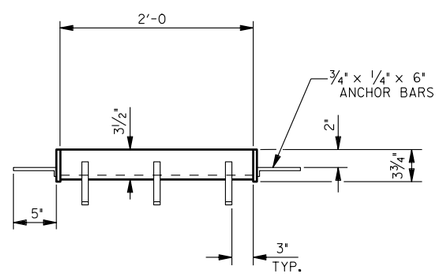

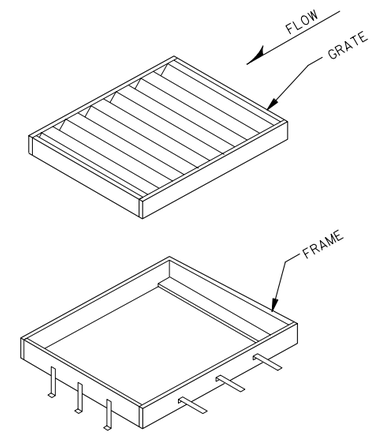

NOTES:

1. HOT-DIP GALVANIZE GRATING AND FRAME AFTER FABRICATION IN ACCORDANCE WITH AASHTO DESIGNATION M 111.
2. USE STRUCTURAL CARBON STEEL CONFORMING TO AASHTO DESIGNATION M 270, GRADE 36 FOR STRUCTURAL STEEL GRATING.
3. SEE ROADWAY PLANS FOR LOCATION AND NUMBER OF GRATES REQUIRED.
4. WELD ALL JOINTS WITH A ¼" FILLET WELD UNLESS NOTED OTHERWISE.
5. ORIENT GRATE WITH DIRECTION OF FLOW.

DESIGN DATA

GRATE AND FRAME: MEET HS 20-44 LOADING OR INTERSTATE ALTERNATE LOADING IN ACCORDANCE WITH AASHTO SPECIFICATIONS WHICH ARE IN EFFECT AT DATE OF REQUEST FOR BIDS.

STRUCTURAL STEEL: Fs=24,000psi

REVISIONS

NO.	DATE	APPR.	REMARKS

UTAH DEPARTMENT OF TRANSPORTATION
STANDARD DRAWINGS FOR ROAD AND BRIDGE CONSTRUCTION
SALT LAKE CITY, UTAH

RECOMMENDED FOR APPROVAL — JULY 03,2002 DATE

CHAIRMAN STANDARDS COMMITTEE APPROVED — JULY 03,2002 DATE

DEPUTY DIRECTOR

STANDARD DRAWING TITLE

28" x 24"
DIRECTIONAL FLOW
GRATE AND FRAME

STD DWG
GF 9

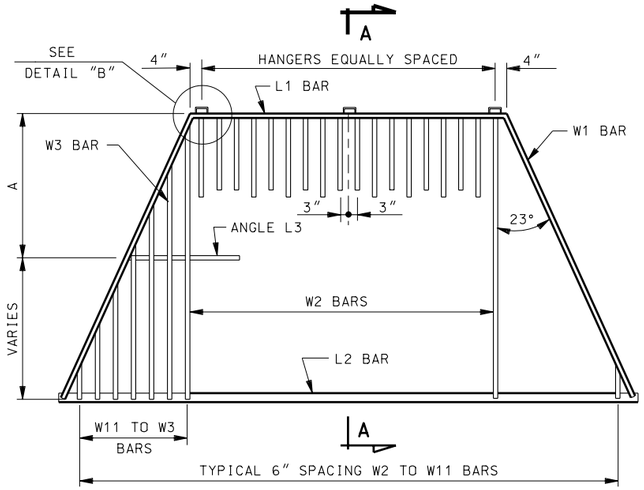

STEEL GRATING DETAIL

SEE STD DWG GF 11 & GF 12 FOR LINES 1 THRU 48

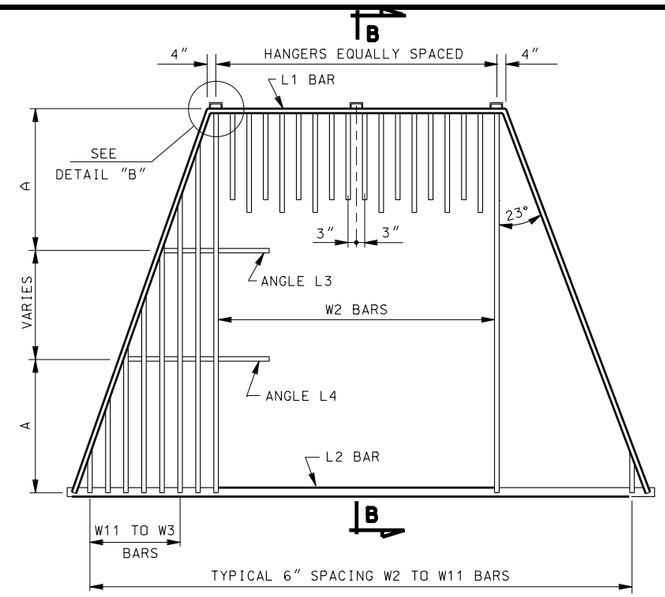

STEEL GRATING DETAIL

SEE STD DWG GF 12 FOR LINES 48 THERU 90

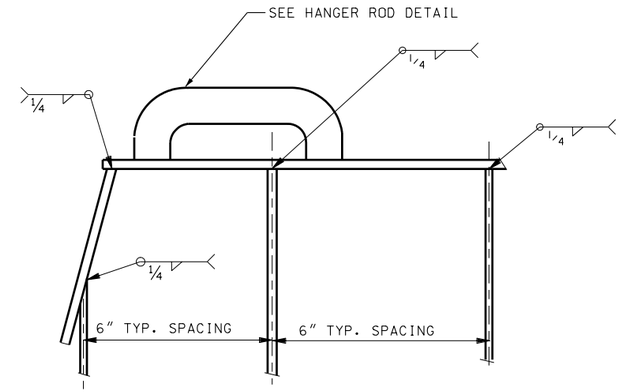

DETAIL "B"

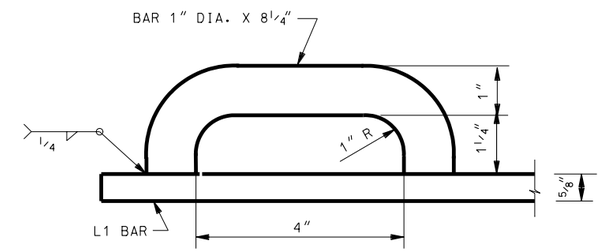

HANGER ROD DETAIL

(WEIGHT OF HANGER RODS 1.84 LBS. EACH)

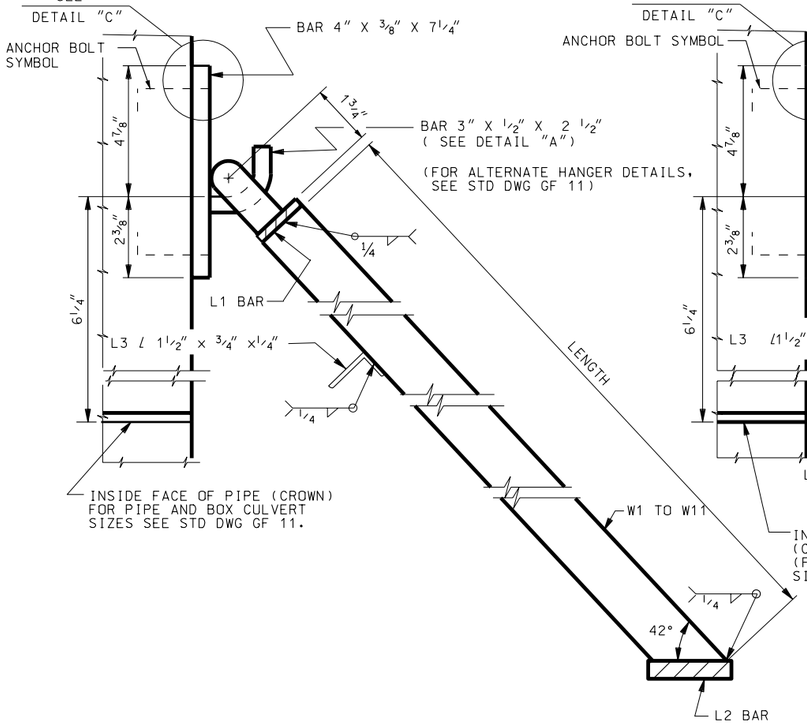

SECTION A–A

WHEN INSTALLING TRASH RACK ON CULVERT HEADWALL
USE CROWN OF CULVERT TO POSITION HANGERS ON HEADWALL

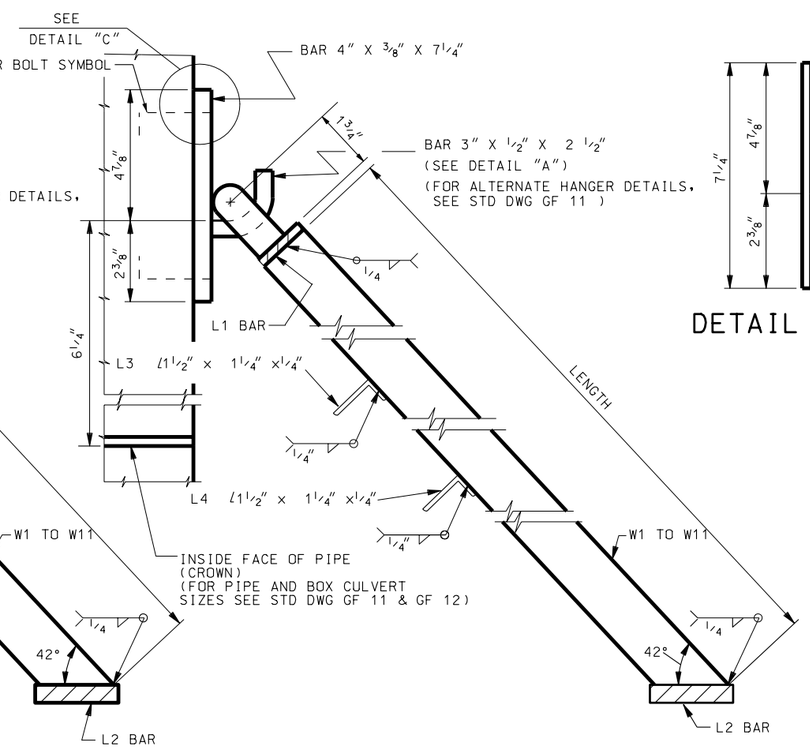

SECTION B–B

WHEN INSTALLING TRASH RACK ON CULVERT HEADWALL
USE CROWN OF CULVERT TO POSITION HANGERS ON HEADWALL

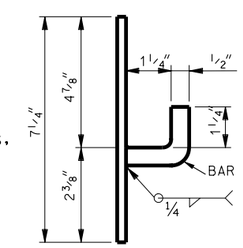

DETAIL "A"

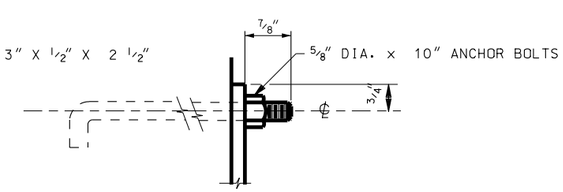

DETAIL "C"

2 ANCHOR BOLTS PER HANGER
(WEIGHT FOR BOLT & NUT 0.97 LBS.)

NOTES:

1. USE STRUCTURAL CARBON STEEL FOR ALL STRUCTURAL STEEL CONFORMING TO AASHTO DESIGNATION M 270 GRADE 36 (ASTM A 709M, GRADE 250) .
2. HOT-DIP GALVANIZE ALL STRUCTURAL STEEL AFTER FABRICATION IN ACCORDANCE WITH AASHTO DESIGNATION M 111(ASTM A 123)

DESIGN DATA

THE DESIGN IS IN ACCORDANCE WITH AASHTO AND INTERIM SPECIFICATIONS:
fs= 20,000 psi

REVISIONS			
NO.	DATE	APPR.	REMARKS

UTAH DEPARTMENT OF TRANSPORTATION
STANDARD DRAWINGS FOR ROAD AND BRIDGE CONSTRUCTION
SALT LAKE CITY, UTAH

RECOMMENDED FOR APPROVAL — JULY 03,2002 DATE
CHAIRMAN STANDARDS COMMITTEE APPROVED — JULY 03,2002 DATE
DEPUTY DIRECTOR

STANDARD DRAWING TITLE
STANDARD TRASH RACKS
90° X-ING L

STD DWG
GF 10

TO BE USED FOR (NOM. SIZE)								TRANSVERSE BARS									MAIN BARS																
								1- EACH REQUIRED									2- EACH			2-EACH REQUIRED									W1 TO W11		NO. OF HANGER AND HANGER RODS (SPACED EQUALLY)	WEIGHT OF STRUCT. STEEL
LINE	BOX CULVERTS	CORRUGATED METAL PIPES	CORRUGATED PIPE ARCHES	CONCRETE PIPE	MULTI-PLATE ELLIPSES	MULTI-PLATE PIPE ARCHES	A	L1			L2			L3	L4	W1	W2		W3	W4	W5	W6	W7	W8	W9	W10	W11				
								LENGTH	THICKNESS	WIDTH	LENGTH	THICKNESS	WIDTH	LENGTH	LENGTH	LENGTH	LENGTH	NO.	LENGTH	LENGTH	LENGTH	LENGTH	LENGTH	LENGTH	LENGTH	LENGTH	LENGTH	THICKNESS	WIDTH		LBS.
1		18″	29″ X 18″	18″			1′-5	1′-5	1/4″	1 1/4″	3′-11 3/4″	1/2″	1 5/8″	2′-8	0	3′-2 3/4″	2′-11 5/8″	2	2′-10 1/8″	1′-8 1/8″	0′-6 1/8″							1/4″	1 1/4″	2	55.8
2							1′-5	2′-4			4′-10 5/8″			3′-7		3′-2 3/4″	2′-11 5/8″	4	2′-9″	1′-7″	0′-5″										67.5
3		21″		21″			1′-7	1′-8			4′-6 1/2″			3′-1		3′-7 1/8″	3′-4 1/8″	4	2′-4 1/4″	1′-2 1/4″												64.5
4		24″		24″			1′-10	1′11			5′-1 1/4″			3′-6		4′-0 1/8″	3′-8 5/8″	4	3′-0 1/4″	1′-10 1/4″	0′- 8 1/4″											74.5
5			36″ x 22″				1′-10	2′-11			5′-10 3/4″			4′-6		3′-9 1/4″	3′-5 3/8″	6	2′-9 1/4″	1′-7 1/4″	0′-5 1/4″											84.4
6				27″			2′-0	2′-2			5′-8 1/8″			3′-11		4′-5 1/2″	4′-1 1/8″	4	3′-8 1/4″	2′-6 1/4″	1′-4 1/4″											84.4
7			43″ x 27″				2′-0	3′-6			7′-0 1/8″			5′-3		4′-5 1/2″	4′-1 1/8″	6	4′-0 1/8″	2′-10 7/8″	1′-8 1/8″	0′-6 1/8″										105.7
8			50″ x 31″				2′-3	4′-1			8′-0 3/8″			6′-0		5′-0″	4′-7 1/4″	8	4′-1″	2′-11″	1′-9″	0′-7″										125.9
9	24″ X 24″						1′-10	1′-11			5′-1 3/8″			3′-6		4′-0 1/8″	3′-8 3/8″	4	3′-0 1/4″	1′-10 1/4″	0′-8 1/4″											74.5
10		30″		30″			2′-2	2′-5			6′-3″			4′-4		4′-10 3/8″	4′-5 3/8″	4	4′-4 1/4″	3′-2 1/4″	2′-0 1/4″	0′-10 1/4″										96.2
11	36″ X 24″						1′-10	2′-11			6′-1 3/8″			4′-6		4′-0 1/2″	3′-8 3/8″	6	3′-0 1/4″	1′-10 1/4″	0′-8 1/4″											89.0
12	48″ X 24″						1′-10	3′-11			7′-1 3/8″			5′-6		4′-0 1/2″	3′-8 3/8″	8	3′-0 1/4″	1′-10 1/4″	0′-8 1/4″											103.6
13	60″ X 24″						1′-10	4′-11			8′-1 3/8″			6′-6		4′-0 1/2″	3′-8 3/8″	10	3′-0 1/4″	1′-10 1/4″	0′-8 1/4″											118.1
14	72″ X 24″						1′-10	5′-11			9′-1 3/8″			7′-6		4′-0 1/2″	3′-8 3/8″	12	3′-0 1/4″	1′-10 1/4″	0′-8 1/4″										2	132.7
15	84″ X 24″						1′-10	6′-11			10′-1 3/8″			8′-6		4′-0 1/2″	3′-8 3/8″	14	3′-0 1/4″	1′-10 1/4″	0′-8 1/4″										3	153.1
16	96″ X 24″						1′-10	7′-11			11′-1 3/4″			9′-6		4′-0 1/2″	3′-8 3/8″	16	3′-0 1/4″	1′-10 1/4″	0′-8 1/4″										3	167.6
17				33″			2′-5	2′-8	1/4″		6′-9 1/8″			4′-9		5′-3 1/4″	4′-10 1/8″	6	3′-10 1/4″	2′-8 1/4″	1′-6 1/4″										3	113.0
18		36″		36″			2′-7	2′-11	3/8″		7′-4 1/2″			5′-2		5′-7 7/8″	5′-2 3/8″	6	4′-5 7/8″	3′-3 1/8″	2′-1 7/8″	0′-11 1/8″									2	121.4
19			58″ x 36″				2′-7	4′-9			9′-2 1/2″			7′-0		5′-7 7/8″	5′-2 3/8″	10	4′-3 5/8″	3′-1 3/8″	1′11 5/8″	0′-9 1/8″										155.4
20	36″ X 36″						2′-7	2′-11			7′-4 1/2″			5′-2		5′-7 7/8″	5′-6 1/2″	6	4′-5 7/8″	3′-3 1/2″	2′-1 7/8″	0′-11 1/8″										121.4
21				39″			2′-9	3′-2			7′-11 3/8″			5′-7		6′-0 3/4″	5′-11 3/8″	6	5′-2″	4′-0″	2′-10″	1′-8″	0′-6″									135.0
22		42″		42″			2′-11	3′-5			8′-6 1/4″			5′-11		6′-5 1/2″	5′-2 3/8″	6	5′-9 7/8″	4′-7 1/2″	3′-5 5/8″	2′-3 1/2″	1′-1 1/8″									148.5
23	48″ x 36″						2′-7	3′-11			8′-4 1/2″			6′-2		5′-7 7/8″	5′-2 3/8″	8	4′-5 7/8″	3′-3 7/8″	2′-1 7/8″	0′-11 1/8″										139.8
24	60″ x 36″						2′-7	4′-11			9′-4 1/2″			7′-2		5′-7 7/8″	5′-8 3/8″	10	4′-5 7/8″	3′-3 7/8″	2′-1 7/8″	0′-11 1/8″										158.2
25			65″ x 40″				2′-10	5′-4			10′-2 3/4″			7′-9		6′-2 3/8″	5′-2 3/8″	10	5′-5 3/4″	4′-3 1/4″	3′-1 3/4″	1′-11 3/4″	0′-9 3/4″									2	180.1
26	72″ x 36″						2′-7	5′-11			10′-4 1/2″			8′-2		5′-7 7/8″	5′-2 3/8″	12	4′-6″	3′-4″	2′-2″	1′-0″									3	182.5
27			72″ x 44″				3′-1	5′-11			11′-2 1/8″			8′-7		6′-8 3/8″	5′-2 3/8″	12	5′5 7/8″	4′-3 7/8″	2′-1 7/8″	0′-11 7/8″	0′-9 7/8″									212.4
28	84″ x 36″						2′-7	6′-11			11′-4 1/2″			9′-2		5′-7 7/8″	5′-2 3/8″	14	4′-5 7/8″	3′-3 7/8″	2′-1 7/8″	0′-11 7/8″										200.8
29	96″ x 36″						2′-7	7′-11			12′-4 1/2″			10′-2		5′-7 7/8″	5′-2 3/8″	16	4′-5 7/8″	3′-3 7/8″	2′-1 7/8″	0′-11 7/8″										219.3
30	108″ x 36″						2′-7	8′-11			13′-4 1/2″			11′-2		5′-7 3/8″	5′-2 3/8″	18	4′-5 7/8″	3′-3 7/8″	2′-1 7/8″	0′-11 7/8″										237.7
31	120″ x 36″						2′-7	9′-11			14′-4 1/2″			12′-2		5′-7 3/8″	5′-2 3/8″	20	4′-5 7/8″	3′-3 7/8″	2′-1 7/8″	0′-11 7/8″									3	258.4
32	132″ x 36″						2′-7	10′-11			15′-4 1/2″			13′-2		5′-7 3/8″	5′-2 3/4″	22	4′-5 7/8″	3′-3 7/8″	2′-1 7/8″	0′-11 7/8″									4	280.3
33	144″ x 36″						2′-7	11′-11	3/8″	1 1/4″	16′-4 1/2″		1 5/8″	14′-2		5′-7 3/8″	5′-2 3/8″	24	4′-5 7/8″	3′-3 7/8″	2′-1 7/8″	0′-11 7/8″									4	298.7
34		48″		48″			3′-4	3′-11	1/4″	1 1/2″	9′-8 1/8″		2″	6′-10		7′-3 3/8″	6′-8 3/4″	8	6′-0 3/8″	4′-10 3/8″	3′-8 1/2″	2′-6 3/8″	1′-4 3/8″								4	196.0
35	48″ x 48″						3′-4	3′-11			9′-8 1/2″			6′-10		7′-3 3/8″	6′-8 3/4″	8	6′-0 3/8″	4′-10 3/8″	3′-8 1/2″	2′-6 3/8″	1′-4 3/8″							1 1/4″	5	201.8
36		54″		54″			3′-8	4′-5			10′-9 7/8″			7′-7		8′-1 3/8″	7′-5 3/4″	8	7′-4 1/4″	6′-2 1/4″	3′-0 1/4″	3′-10 1/4″	2′-8 1/4″	1′-6 1/4″						1 1/2″	2	246.3
37	60″ x 48″						3′-4	4′-11			10′-8 1/8″			7′-10		7′-3 3/8″	6′-8 3/4″	10	6′-0 3/8″	4′-10 3/8″	3′-8 1/2″	2′-6 3/8″	1′-4 3/8″							1 1/4″	2	206.6
38	72″ x 48″							5′-11			11′-8 1/2″			8′-10				12													2	228.7
39	84″ x 48″							6′-11			12′-8 1/2″			9′-10				14													2	250.9
40	96″ x 48″							7′-11			13′-8 1/2″			10′-10				16													3	278.9
41	108″ x 48″							8′-11			14′-8 1/2″			11′-10				18													3	301.1
42	120″ x 48″							9′-11			15′-8 1/2″			12′-10				20													3	323.2
43	132″ x 48″							10′-11			16′-8 1/2″			13′-10				22													4	351.2
44	144″ x 48″						3′-4	11′-11	1/4″	1 1/2″	17′-8 1/2″	1/2″	2″	14′-10	0	7′-3 3/8″	6′-8 3/4″	24	6′-0 3/8″	4′-10 3/8″	3′-8 1/2″	2′-6 3/8″	1′-4 3/8″						1/4″	1 1/4″	4	373.4

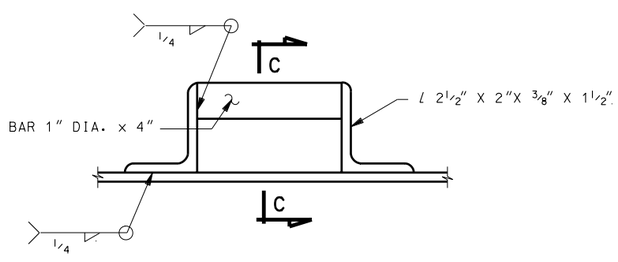

ALTERNATE HANGER ROD DETAIL

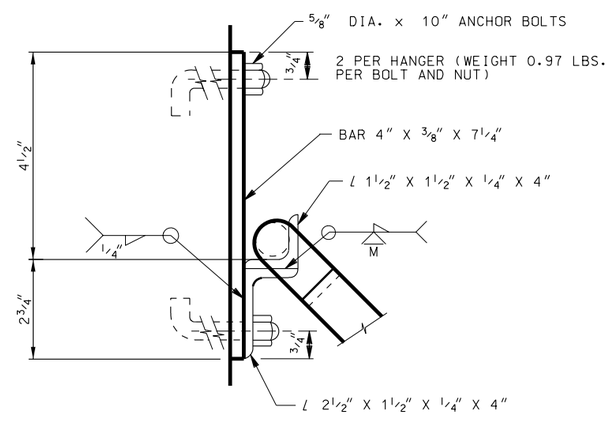

DETAIL "A"
(ALTERNATE HANGER DETAILS)

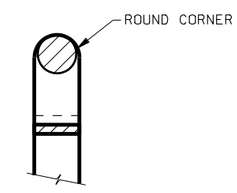

SECTION C-C

NO.	DATE	APPR.	REMARKS

REVISIONS

UTAH DEPARTMENT OF TRANSPORTATION
STANDARD DRAWINGS FOR ROAD AND BRIDGE CONSTRUCTION
SALT LAKE CITY, UTAH

RECOMMENDED FOR APPROVAL — JULY 03,2002 DATE

CHAIRMAN STANDARDS COMMITTEE APPROVED — JULY 03,2002 DATE

DEPUTY DIRECTOR

STANDARD TRASH RACKS

STANDARD DRAWING TITLE

STD DWG
GF 11

TO BE USED FOR (NOM. SIZE)								TRANSVERSE BARS								MAIN BARS															
								1- EACH REQUIRED								2- EA.		2-EACH REQUIRED									W1 TO W11				
								L1			L2			L3	L4	W1	W2		W3	W4	W5	W6	W7	W8	W9	W10	W11				
LINE	BOX CULVERTS	CORRUGATED METAL PIPES	CORRUGATED PIPE ARCHES	CONCRETE PIPE	MULTI-PLATE ELLIPSES	MULTI-PLATE PIPE ARCHES	A	LENGTH	THICKNESS	WIDTH	LENGTH	THICKNESS	WIDTH	LENGTH	LENGTH	LENGTH	LENGTH	NO.	LENGTH	LENGTH	LENGTH	LENGTH	LENGTH	LENGTH	LENGTH	LENGTH	LENGTH	THICKNESS	WIDTH	NO. OF HANGER AND HANGER RODS (SPACED EQUALLY)	WEIGHT OF STRUCT. STEEL LBS.
45	156″ x 48″						3′-4	12′-11	1/4″	1 1/2″	18′-8 1/8″	1/2″	2″	15′-10	0	7′-3 7/8″	6′-8 3/4″	26	6′-0 3/8″	4′-10 3/8″	3′-8 3/8″	2′-6 3/8″	1′-4 3/8″					1/4″	1 1/4″	4	395.6
46	168″ x 48″							13′-11			19′-8 1/8″			16′-10				28												5	423.5
47	180″ x 48″							14′-11			20′-8 1/8″			17′-10				30												5	445.7
48	192″ x 48″						3′-4	15′-11			21′-8 1/8″			18′-10	0	7′-3 7/8″	6′-8 3/4″	32	6′-0 3/8″	4′-10 3/8″	3′-8 3/8″	2′-6 3/8″	1′-4 3/8″						1 1/4″	5	467.9
49						73″ x 55″	2′-6	6′-0			12′-6 1/4″			8′-2	10′-4 1/2″	8′-3 3/8″	7′-1 1/4″	12	7′-0″	5′-10″	4′-8″	3′-6″	2′-4″	1′-2 ″						1 1/2″	6	339.1
50						76″ x 57″	2′-8	6′-3	1/4″		12′-11 7/8″			8′-6 1/2	10′-8 1/2″	8′-6 3/8″	7′-10 1/4″	12	7′-8 1/2″	6′-4 1/2″	5′-2 1/8″	4′-0 1/2″	2′-10 1/2″	1′-8 1/2″	0′-6 1/2″						6	357.5
51		60″		60″			2′-8	4′-11	3/8″		11′-11 1/2″			7′-2 1/2	9′-8″	8′-11 1/8″	8′-2 1/2″	10	7′-6″	6′-4 ″	5′-2″	4′-0″	2′-10″	1′-8″	0′-6″						2	310.7
52					56″ x 62″		2′-9	4′-7			11′-10 1/2″			6′-11 1/2	9′-6″	9′-2 1/2″	8′-5 1/8″	10	7′-4 3/8″	6′-2 3/8″	5′-0 3/8″	3′-10 3/8″	2′-8 3/8″	1′-6 3/8″						2	309.3
53						81″ x 59″	2′-8	5′-8			13′-7 3/8″			8′-11 1/2	11′-4″	8′-9 3/4″	8′-1 1/8″	14	7′-1 1/8″	5′-11 1/8″	4′-9 1/8″	3′-7 1/8″	2′-5 1/8″	1′-3 1/2″						3	367.2
54						84″ x 61″	2′-9	8′-11			14′-1″			9′-3 1/2	11′-9″	9′-1″	8′-4 1/4″	14	7′-7 3/4″	6′-5 3/4″	5′-3 3/4″	4′-1 3/4″	2′-11 3/4″	1′-9 3/4″	0′-7 3/4″						3	387.1
55						87″ x 63″	2′-10	7′-2			14′-6 3/8″			9′-7	12′-1″	9′-4 1/8″	8′-7″	14	8′-2 1/8″	7′-0 1/8″	5′-10 1/8″	4′-8 1/2″	3′-6 1/8″	2′-4 1/2″	1′-2 1/8″						3	405.7
56	60″ x 60″						2′-8	4′-11			11′-11 1/8″			7′-2 1/2	9′-8″	8′-11 1/4″	8′-2 1/2″	10	7′-6″	6′-4″	5′-2″	4′-0″	2′-10″	1′-8″	0′-6″						2	310.7
57		66″		66″			2′-11	5′-5			13′-1 1/4″			7′-11	10′-7″	9′-8 5/8″	8′-11 1/4″	10	8′-9 3/4″	7′-7 3/4″	6′-5 3/4″	5′-3 3/4″	4 -1 3/4″	2′-11 3/8″	1′-9 3/4″	0′-7 3/4″					3	365.5
58	72″ x 60″							5′-11			12′-11 1/2″			8′-5	10′-5 1/2″	8′-11 1/8″	8′-2″	12	7′-5″	6′-4 ″	5′-2″	4′-0″	2′-10″	1′-8″	0′-6″						4	354.5
59	84″ x 60″							6′-11			13′-11 1/8″			9′-5	11′-5 1/2″			14													3	380.8
60	96″ x 60″							7′-11			14′-11 1/2″			10′-5	12′-5 1/2″			16													3	412.8
61	108″ x 60″							8′-11			15′-11 1/2″			11′-5	13′-5 1/2″			18													3	444.8
62	120″ x 60″							9′-11			16′-11 1/2″			12′-5	14′-5 1/2″			20													4	482.7
63	132″ x 60″							10′-11			17′-11 1/2″			13′-5	15′-5 1/2″			22													4	514.7
64	144″ x 60″							11′-11			18′-11 1/2″			14′-5	16′-5 1/2″			24													4	546.6
65	156″ x 60″							12′-11			19′-11 1/2″			15′-5	17′-5 1/2″			26													5	584.6
66	168″ x 60″							13′-11			20′-11 1/2″			16′-5	18′-5 1/2″			28													5	616.8
67	180″ x 60″							14′-11			21′-11 1/2″			17′-5	19′-5 1/2″			30													5	648.6
68	192″ x 60″						2′-11	15′-11			22′-11 5/8″			18′-5	20′-5 1/2″	8′-11 1/8″	8′-2″	32	7′-5″	6′-4	5′-2″	4′-0″	2′-10″	1′-8″	0′-6″						6	686.5
69					62″ x 68″		3′-0	5′-1			12′-11 7/8″			7′-8	10′-5″	10′- 0 1/4″	9′-2 1/2″	10	8′-8 1/2″	7′-6 3/8″	6′-4 3/8″	5′-2 3/8″	4′-0 3/8″	2′-10 3/8″	1′-8 3/8″	0′-6 3/8″						6	380.7
70						92″ x 63″	2′-11	7′-7			15′-2″			10′-1	12′-6″	9′-7 3/8″	8′-10″	16	7′-8 7/8″	6′-6 7/8″	5′-4 7/8″	4′-2 7/8″	3′-0 7/8″	1′-10 3/8″	0′-8 7/8″						3	432.2
71						95″ x 67″	3′-0	7′-10			15′-7 1/2″			10′-5	13′-1″	9′-10 5/8″	9′-1″	16	8′-3 3/8″	7′-1 3/8″	5′-11 3/8″	4′-9 3/8″	3′-7 3/8″	2′-5 1/8″	1′-3 3/8″						3	452.2
72						98″ X 69″	3′-2	8′-1	3/8″		16′-1/8″			10′-9	13′-4 1/2″	10′-1 3/8″	9′-4″	16	8′-9 7/8″	7′-7 7/8″	6′-5 3/8″	5′-3 7/8″	4′-1 7/8″	2′-11 3/8″	1′-9 7/8″	0′-7 1/2″				1 1/2″	3	473.8
73		72″		72″			3′-2	5′-11	1/2″		14′-2 7/8″			8′-8	11′-8″	10′-6 3/8″	9′-8 3/4″	12	9′-0″	7′-10″	6′-8″	5′-6″	4′-4″	3′-2″	2′-0″	0′-10″				1 3/4″	4	472.8
74					67″ x 75″		3′-4	5′-6			14′-1 3/4″			8′-4 1/2	11′-3 1/2″	10′-11 1/2″	10′-0 7/8″	10	10′-0 3/8″	8′-10 3/8″	7′-8 5/8″	6′-6 5/8″	5′-4 3/8″	4′-2 5/8″	3′-0 3/8″	1′-10 5/8″	0′-8 5/8″				4	475.6
75						103″ X 71″	3′-2	8′-6			16′-8 5/8″			11′-3	14′-0″	10′-5″	9′-6 7/8″	16	9′-6 3/8″	8′-4 5/8″	7′-2 3/8″	5′-0 5/8″	4′-10 3/8″	3′-8 1/8″	2′-6 3/8″	1′-4 5/8″					4	570.8
76						106″ X 73″	3′-3	8′-9			17′-2 1/2″			11′-6 1/2	14′-4 1/8″	10′-8 1/4″	9′-9 7/8″	18	8′-11 1/8″	7′-9 1/8″	6′-7 1/8″	6′-3 1/2″	4′-3 1/2″	3′-1 1/8″	1′-11 1/8″	0′-9 1/8″					4	598.4
77						112″ X 75″	3′-4	9′-3			17′-10 3/4″			12′-1 1/2	15′-0 1/2″	10′-11 1/2″	10′-0 1/4″	18	9′-9 1/8″	8′-7 1/8″	7′-5 1/8″	6′-3 1/8″	5′-1 1/8″	3′-11 1/8″	2′-9 1/8″	1′-7 1/8″					4	632.1
78						114″ X 77″	3′-5	9′-5			18′-3 3/8″			12′-4	15′-4″	11′-2 3/4″	10′-9 7/8″	18	10′-2 1/2″	9′-0 1/2″	7′-10 1/2″	6′-8 1/4″	5′-6 1/2″	4′-4 1/2″	3′-2 1/2″	2′-0 1/2″	0′-10 1/2″				3	651.1
79	72″ x 72″						3′-2	5′-11			14′-2 7/8″			8′-8	11′-6 1/2″	10′-6 3/8″	9′-8 3/8″	12	9′-0″	7′-10″	6′-8″	5′-6″	4′-4″	3′-2″	2′-0″	0′-10″				3	467.0
80	84″ x 72″							6′-11			15′-2 7/8″			9′-8	12′-6 1/2″			14													3	508.1
81	96″ x 72″							7′-11			16′-2 7/8″			10′-8	13′-6 1/2″			16													3	549.1
82	108″ x 72″							8′-11			17′-2 7/8″			11′-8	14′-6 1/2″			18													4	595.9
83	120″ x 72″							9′-11			18′-2 1/2″			12′-8	15′-6 1/2″			20													4	636.9
84	132″ x 72″							10′-11			19′-2 7/8″			13′-8	16′-6 1/2″			22													4	678.0
85	144″ x 72″							11′-11			20′-2 7/8″			14′-8	17′-6 1/2″			24													5	724.8
86	156″ x 72″							12′-11			21′-2 1/2″			15′-8	18′-6 1/2″			26													5	765.8
87	168″ x 72″							13′-11			22-′1/2″			16′-8	19′-6 1/2″			28													5	806.9
88	180″ x 72″							14′-11			23′-2 7/8″			17′-8	20′-6 1/2″			30													6	853.7
89	192″ x 72″						3′-2	15′-11			24′-2 7/8″			18′-8	21′-6 1/2″	10′-6 3/8″	9′-8 3/8″	32	9′-0″	7′-10″	6′-8″	5′-6″	4′-4″	3′-2″	2′-0″	0′-10″				6	894.7
90						96″ x 74″	3′-3	7′-11	1/2″	1 1/2″	16′-5 5/8″	1/2″	2″	10′-8 1/2	13′-8″	10′-10″	9′-11 5/8″	15	9′-10″	8′-8″	7′-6″	6′-4″	5′-2″	4′-0″	2′-10″	1′-8″				1 3/4″	3	540.7

REVISIONS

NO.	DATE	APPR.	REMARKS

UTAH DEPARTMENT OF TRANSPORTATION
STANDARD DRAWINGS FOR ROAD AND BRIDGE CONSTRUCTION
SALT LAKE CITY, UTAH

RECOMMENDED FOR APPROVAL — JULY 03,2002 DATE

CHAIRMAN STANDARDS COMMITTEE APPROVED — JULY 03,2002 DATE

DEPUTY DIRECTOR

STANDARD DRAWING TITLE

STANDARD TRASH RACKS

STD DWG

GF 12

MEDIAN WITH RAISED ISLAND

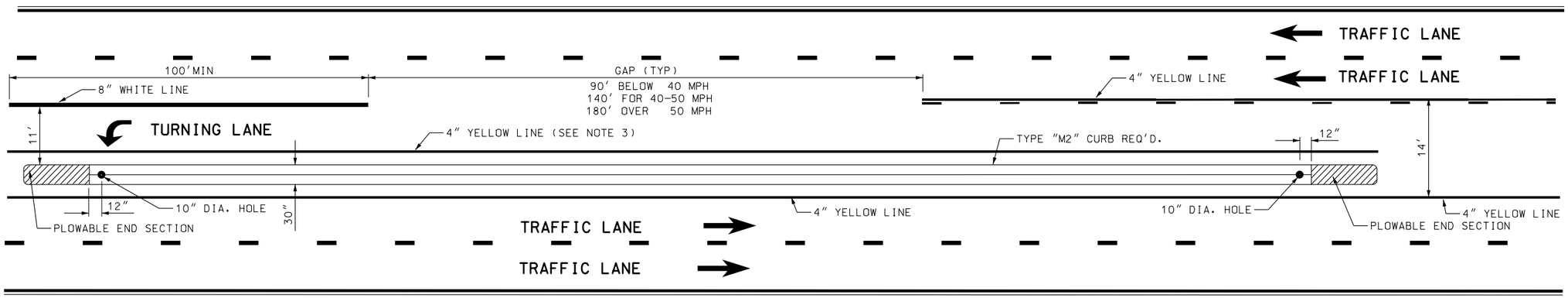

RAISED ISLAND DETAIL
TYPE "M2" CURB

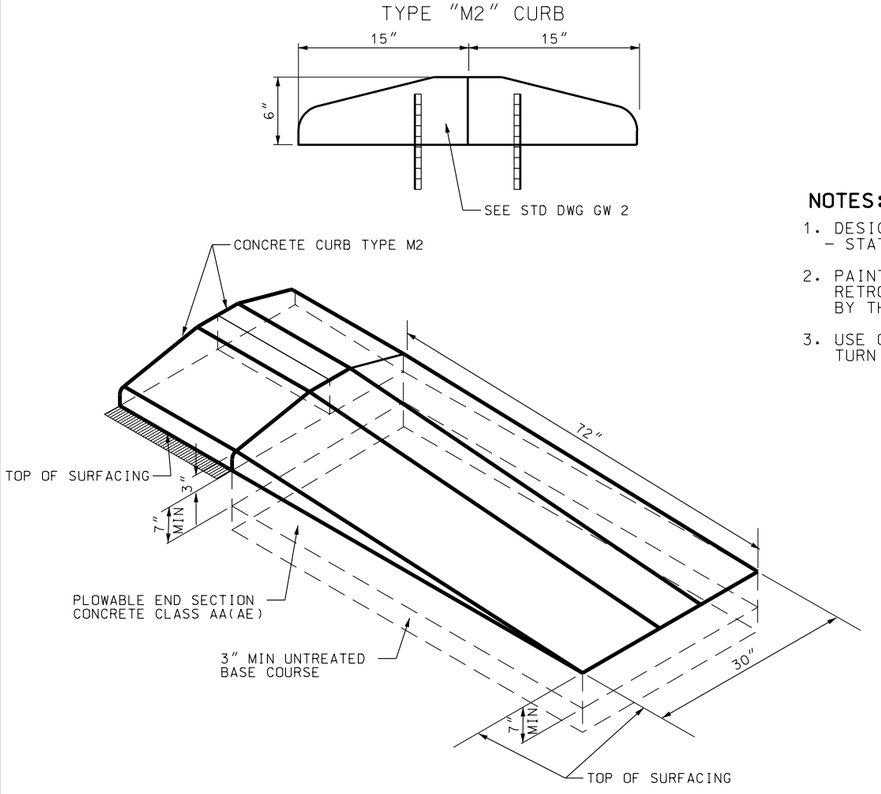

NOTES:

1. DESIGN TO SHOW CONTROL POINTS - STATION & OFFSET.
2. PAINT ISLAND CURBS WITH RETROFLECTIVE PAINT AS DETERMINED BY THE DIRECTION OF TRAVEL.
3. USE OF 4" YELLOW LINE INSIDE LEFT TURN LANE OPTIONAL.

RAISED ISLAND DETAIL
TYPE "B5" CURB

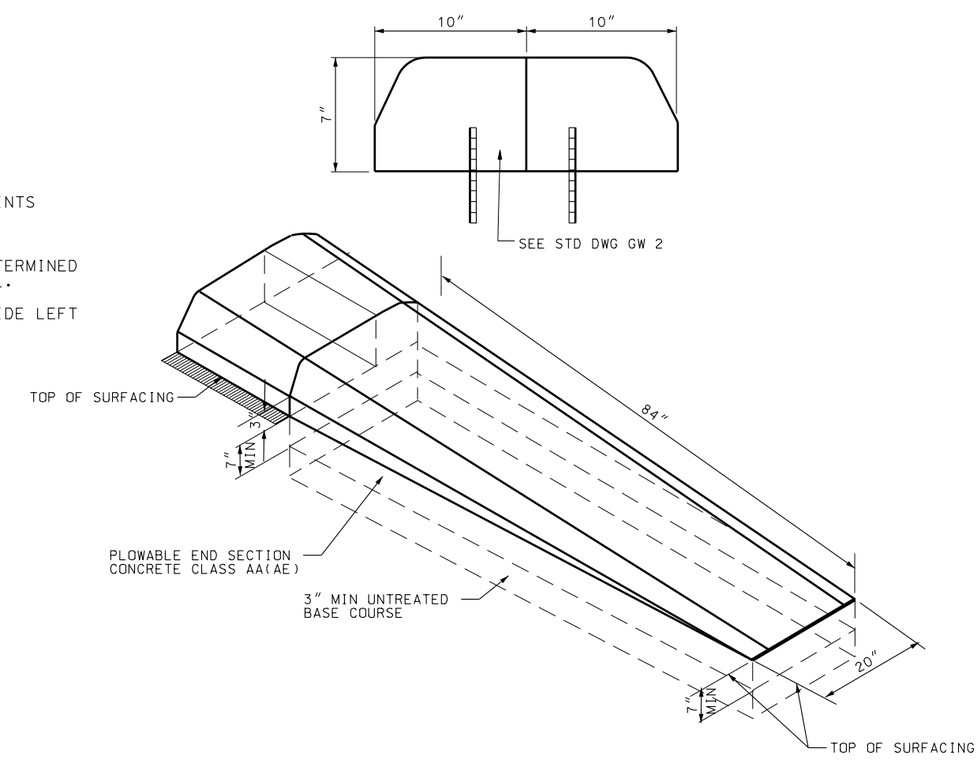

PLOWABLE END SECTION DETAILS

REVISIONS

NO.	DATE	APPR.	REMARKS

UTAH DEPARTMENT OF TRANSPORTATION
STANDARD DRAWINGS FOR ROAD AND BRIDGE CONSTRUCTION
SALT LAKE CITY, UTAH

RECOMMENDED FOR APPROVAL — JULY 03,2002 DATE

CHAIRMAN STANDARDS COMMITTEE APPROVED — JULY 03,2002 DATE

DEPUTY DIRECTOR

RAISED MEDIAN AND PLOWABLE END SECTION

STANDARD DRAWING TITLE

STD DWG
GW 1

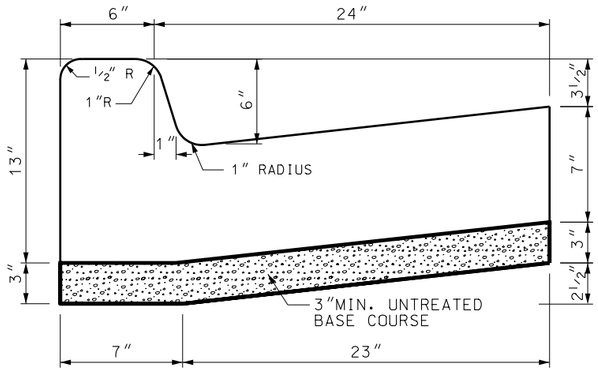

TYPE B1

CURB & GUTTER
AREA = 1.680 SQ.FT.

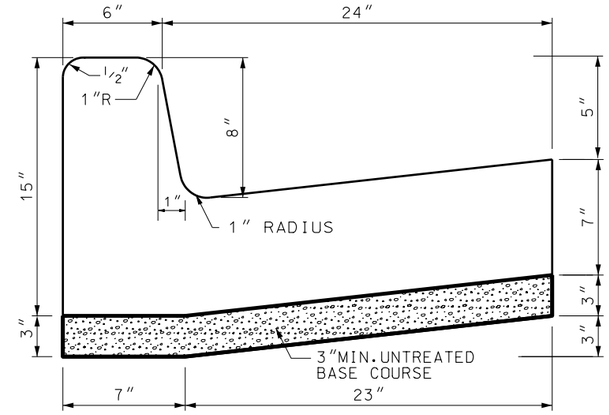

TYPE B2

CURB & GUTTER
AREA = 1.765 SQ.FT.

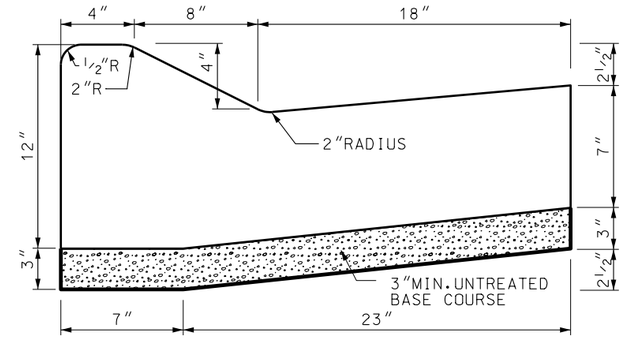

TYPE M1

CURB & GUTTER
AREA = 1.700 SQ.FT.

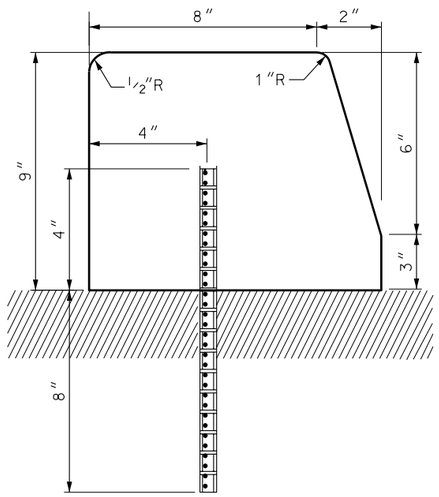

TYPE B3

CURB
AREA = 0.580 SQ.FT.

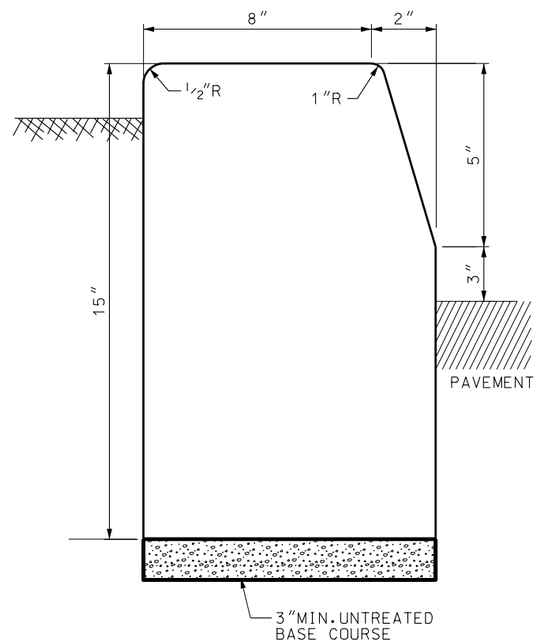

TYPE B4

CURB
AREA = 1.033 SQ.FT.

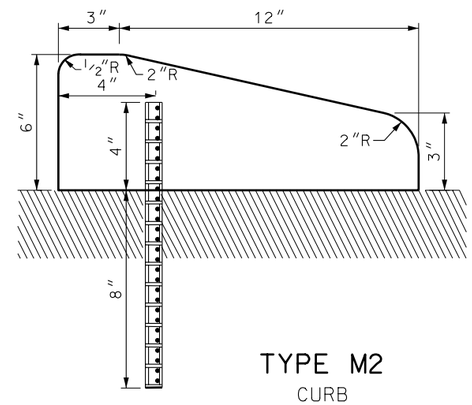

TYPE M2

CURB
AREA = 0.484 SQ.FT.

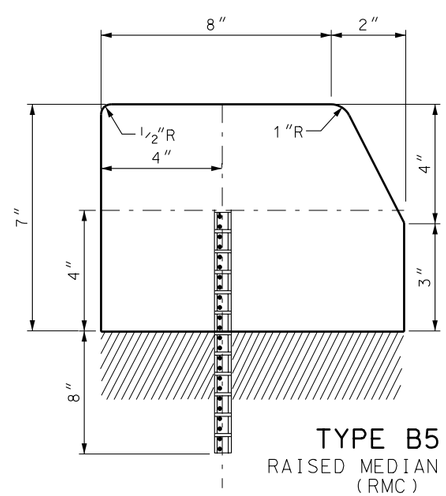

TYPE B5

RAISED MEDIAN CURB
(RMC)
AREA = 0.490 SQ.FT.

NOTES:

1. DRAINAGE CURBS: TYPE B1,B2 & M1
2. MOUNTABLE CURBS: TYPES M1 & M2 FOR APPLICATION REFER TO THE AASHTO POLICY ON GEOMETRIC DESIGN OF HIGHWAYS AND STREETS.
3. BARRIER CURBS TYPES B1, B2, B3, B4 & B5 USED WITH DESIGN SPEED UP TO 40 MPH EXCEPT IN PREDOMINATELY URBAN OR RAPIDLY DEVELOPING RURAL AREAS WHERE BARRIER CURB MAY BE USED WITH DESIGN SPEEDS UP TO 50 MPH.
4. DOWELS: 3/4" DEFORMED BARS ON 5' MAX.CENTERS.
5. PRECAST CURBS:
   A. MINIMUM OF 10' IN LENGTH.
   B. DOWELS AT A MINIMUM OF 3 PER 10' LENGTH.
   C. INCLUDE ADEQUATE REINFORCING STEEL TO WITH STAND HANDLING STRESSES.
6. CONCRETE CLASS AA "AE"
7. USE TYPE B4 ONLY AS BORDER CURB.
8. CURB HEIGHT IS MEASURED VERTICALLY FROM THE FLOW LINE OF THE GUTTER TO TOP BACK OF CURB.
9. REFER TO ROADWAY PLANS FOR UNTREATED BASE COURSE SIZE.

REVISIONS

NO.	DATE	APPR.	REMARKS

UTAH DEPARTMENT OF TRANSPORTATION
STANDARD DRAWINGS FOR ROAD AND BRIDGE CONSTRUCTION
SALT LAKE CITY, UTAH

RECOMMENDED FOR APPROVAL — JULY 03,2002 DATE

CHAIRMAN STANDARDS COMMITTEE APPROVED — JULY 03,2002 DATE

DEPUTY DIRECTOR

STANDARD DRAWING TITLE: CONCRETE CURB & GUTTER

STD DWG
GW 2

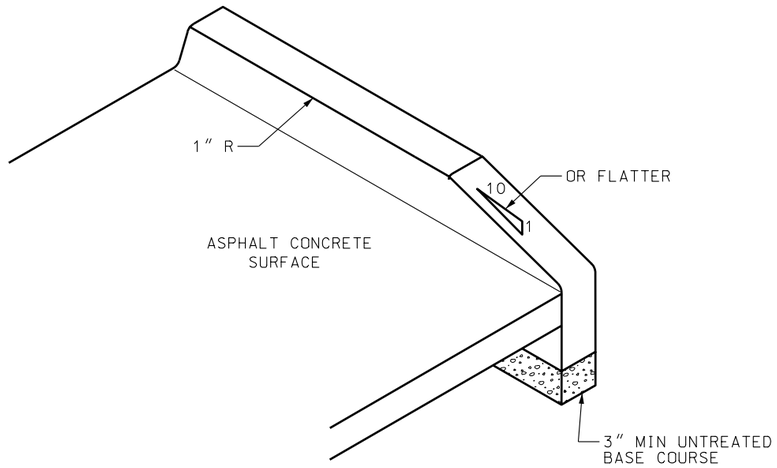

TYPICAL
CURB END DETAIL

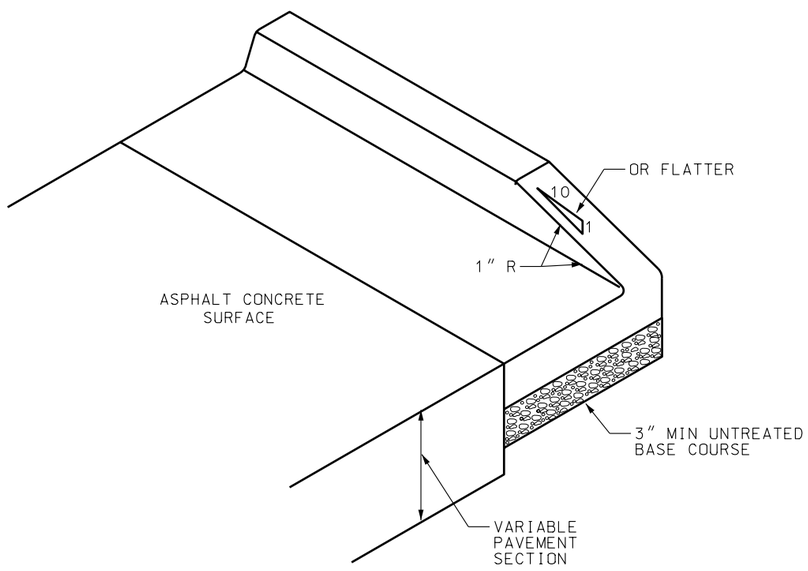

TYPICAL
CURB & GUTTER
END DETAIL

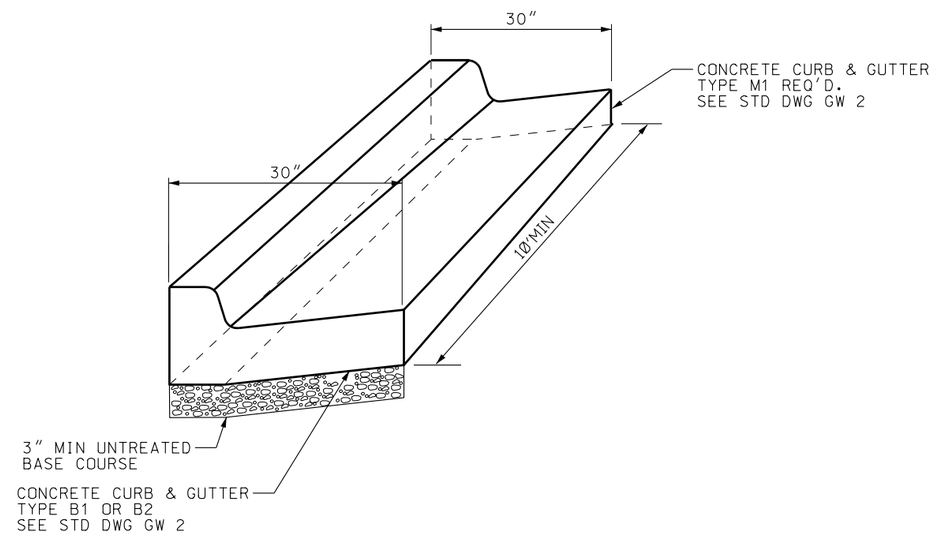

CURB & GUTTER
TRANSITION DETAIL

REVISIONS

NO.	DATE	APPR.	REMARKS

UTAH DEPARTMENT OF TRANSPORTATION
STANDARD DRAWINGS FOR ROAD AND BRIDGE CONSTRUCTION
SALT LAKE CITY, UTAH

RECOMMENDED FOR APPROVAL — JULY 03,2002 DATE

CHAIRMAN STANDARDS COMMITTEE APPROVED — JULY 03,2002 DATE

DEPUTY DIRECTOR

CONCRETE
CURB & GUTTER
DETAILS

STANDARD DRAWING TITLE

STD DWG
GW 3

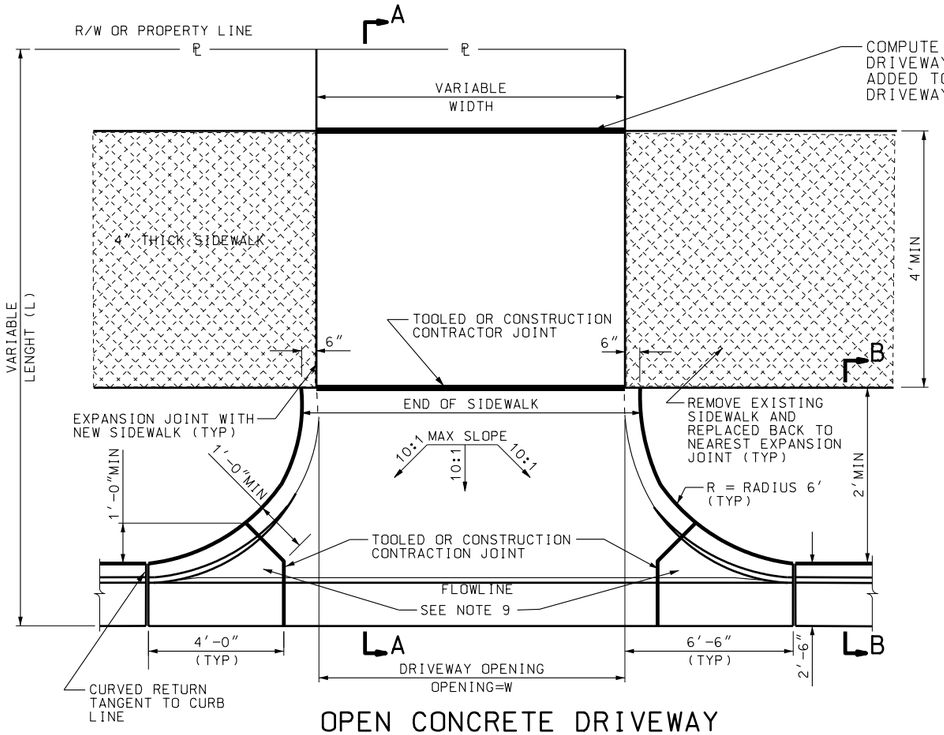

OPEN CONCRETE DRIVEWAY

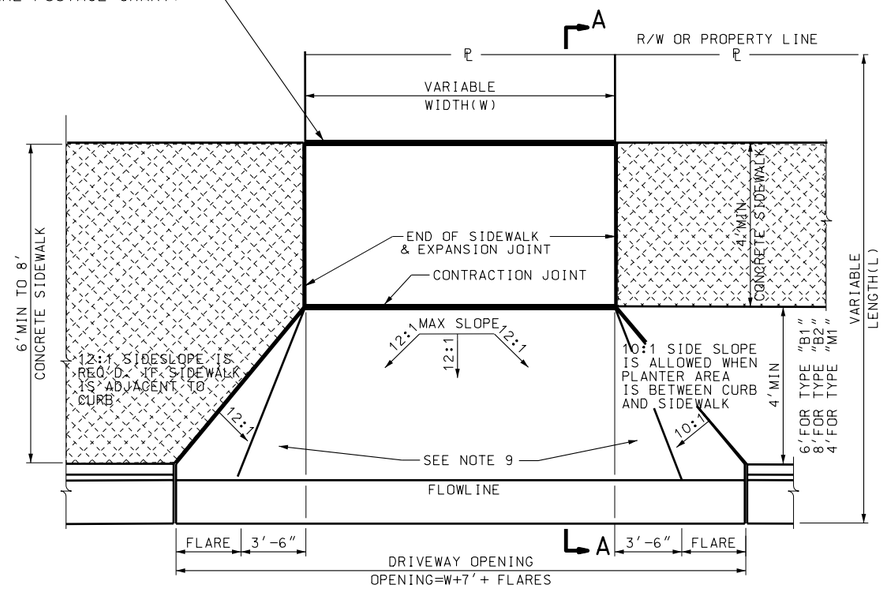

FLARED DRIVEWAY

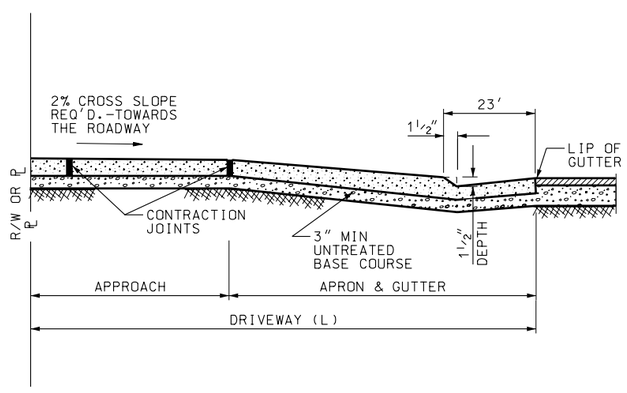

SECTION A-A

DRIVEWAY RADIUS AND FLARE AREA CHART			
OPEN CONCRETE DRIVEWAY	ft²	FLARED DRIVEWAY	ft²
6' RADIUS	44.13	12:1 FLARES	
		1- TYPE "B1" CURB & GUTTER	88.09
		2- TYPE "B2" CURB & GUTTER	129.92
		3- TYPE "M1" CURB & GUTTER	44.56
NOTE:			
ft2 QUANTITY = BOTH SIDES OF			
DRIVEWAY ROUNDED TO THE		10:1 FLARES	
NEAREST 0.5 ft²		1- TYPE "B1" CURB & GUTTER	78.90
		2- TYPE "B2" CURB & GUTTER	115.39
		3- TYPE "M1" CURB & GUTTER	34.66

NOTES:

1. DRIVEWAY DIMENSIONS (MAX.& MIN.) ARE LOCATED IN U.D.O.T. "MANUAL FOR THE ACCOMMODATION OF UTILITIES AND THE CONTROL AND PROTECTION OF STATE HIGHWAY RIGHTS OF WAY" CURRENT EDITION.
2. MAXIMUM DISTANCE BETWEEN TOOLED OR CONSTRUCTION JOINTS 10' LATERALLY AND LONGITUDINALLY SPACED EQUALLY.
3. PROVIDE EXPANSION JOINTS WHERE CONCRETE SIDEWALK BUTTS AGAINST CONCRETE DRIVEWAYS AND IN CONCRETE SIDEWALK AT 30 FEET INTERVALS.
4. DO NOT PAY FOR SIDEWALK INSIDE THE DRIVEWAY LIMITS (WIDTH AND LENGTH)
5. OPEN CONCRETE DRIVEWAY - FLARED DRIVEWAY
   A: RESIDENTIAL = 6 inch THICK. COMMERCIAL = 7 inch THICK
   B: EXTEND DRIVEWAY APPROACH TO R/W - PROPERTY LINE
   C: IF THE GRADES SHOWN ON THE SLOPE DETAIL CANNOT BE MET, DEPRESS THE LONGITUDINAL SLOPE OF THE SIDEWALK AT A RATE OF 5 PERCENT TO MEET THE APRON - APPROACH ELEVATION.
6. USE CLASS AA(AE) CONCRETE FOR SIDEWALK AND DRIVEWAYS
7. USE UNTREATED BASE COURSE UNDER ALL SIDEWALKS AND DRIVEWAYS.
8. 10:1 = 10% SLOPE; 12:1 = 8.33% SLOPE.
9. QUANTITIES FOR DRIVEWAYS INCLUDE RADIUS AND FLARES TO LIP OF GUTTER.

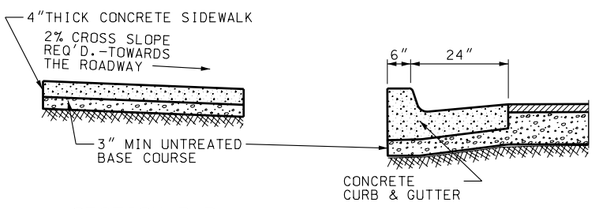

SECTION B-B

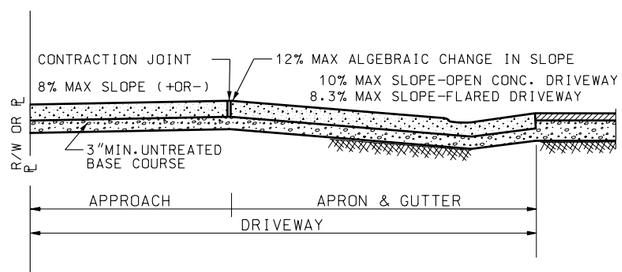

SLOPE DETAIL

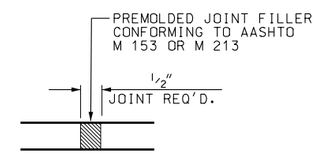

EXPANSION-CONTRACTION JOINT DETAIL

REVISIONS

NO.	DATE	APPR.	REMARKS

UTAH DEPARTMENT OF TRANSPORTATION
STANDARD DRAWINGS FOR ROAD AND BRIDGE CONSTRUCTION
SALT LAKE CITY, UTAH

RECOMMENDED FOR APPROVAL — JULY 03,2002 DATE

CHAIRMAN STANDARDS COMMITTEE APPROVED — JULY 03,2002 DATE

DEPUTY DIRECTOR

STANDARD DRAWING TITLE: CONCRETE DRIVEWAYS & SIDEWALKS

STD DWG GW 4

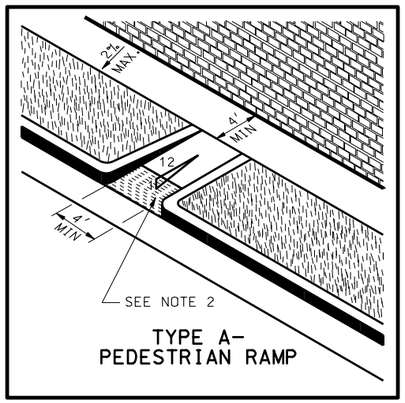

TYPE A–
PEDESTRIAN RAMP

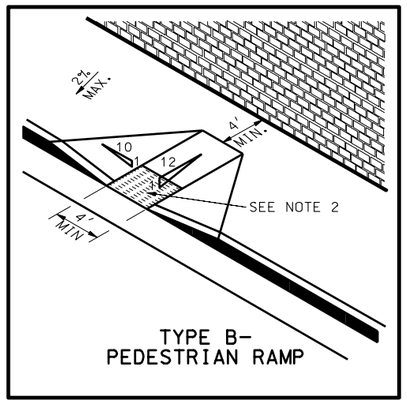

TYPE B–
PEDESTRIAN RAMP

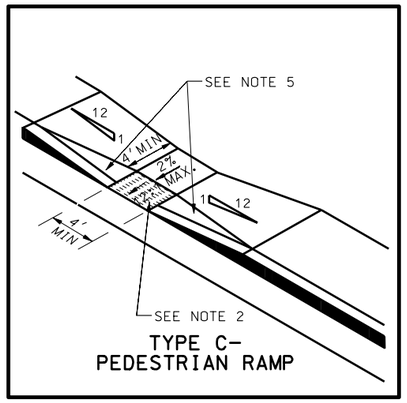

TYPE C–
PEDESTRIAN RAMP

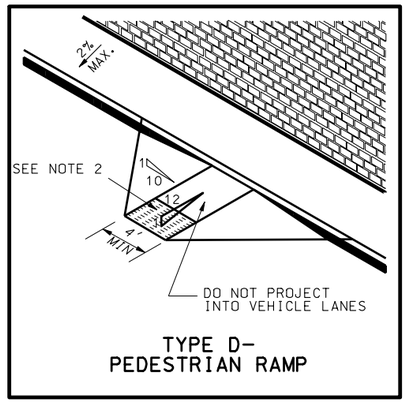

TYPE D–
PEDESTRIAN RAMP

TYPE A – PEDESTRIAN RAMP
THE ENTIRE RAMP SLOPE IS ACHIEVED OUTSIDE THE SIDEWALK SECTION. A STEEP FACED CURB IS USED ALONG THE RAMP. THIS TYPE OF RAMP IS ALWAYS PREFERRED BECAUSE IT PROVIDES A CONSISTENT SIDEWALK SECTION FREE OF RAMP CROSS-SLOPES.

TYPE B – PEDESTRIAN RAMP
THE STEEPEST ALLOWABLE SLOPE OCCURS ALONG THE SIDEWALK AT 10:1. PROVIDE AT LEAST 4' OF SIDEWALK WIDTH BEYOND THE RAMP.

TYPE C – PEDESTRIAN RAMP
USE THIS TYPE OF RAMP WHEN THERE IS INSUFFICIENT WIDTH TO ACCOMMODATE TYPE B PEDESTRIAN RAMP. THE STEEPEST ALLOWABLE SLOPE OCCURS ALONG THE SIDEWALK AT 12:1. PROVIDE AT LEAST 4' X 4' SIDEWALK AT THE BASE OF THE RAMP.

TYPE D – PEDESTRIAN RAMP
DO NOT PROJECT THE BUILT-UP RAMP SECTION INTO TRAFFIC LANE.

TYPE E – PEDESTRIAN RAMP
USE THIS TYPE OF RAMP AT INTERSECTIONS WHEN CROSSWALK FACILITIES ARE PROVIDED.

TYPE F – PEDESTRIAN MEDIAN BREAK
USE THIS TYPE OF MEDIAN ACCESS WHEN CROSSWALK FACILITIES ARE PROVIDED.

FIGURE 1
ILLUSTRATES THE CROSS SECTION AND PROFILE VIEW OF TYPE D AND TYPE G PEDESTRIAN RAMPS. CONSTRUCT THE RAMP BASE SURFACE EVEN WITH THE PAVEMENT SURFACE AT THE FACE OF THE CURB.

NOTES:
1. PEDESTRIAN RAMPS TYPE A, B, C AND D ARE ACCEPTABLE FOR USE AT MID-BLOCK CROSSWALKS.
2. PROVIDE DETECTABLE WARNING AREA AT THE BASE OF THE CURB RAMP (2-FEET LONG MINIMUM). INSTALL DETECTABLE WARNINGS BY IMPRESSING AND REMOVING EXPANDED METAL MESH INTO THE BASE OF THE RAMP SURFACE WHILE THE CONCRETE IS STILL IN A PLASTIC STATE. SEE FIGURE 3 FOR DIMENSION DETAILS.
3. PROVIDE ONE DESIGNATED "VAN ACCESSIBLE" PARKING SPACE IN EVERY EIGHT ACCESSIBLE PARKING SPACES, BUT NOT LESS THAN ONE.
4. REFER TO THE MUTCD (LATEST EDITION) FOR RESERVED PARKING SIGNING FOR DISABLED PERSONS (R7-8).
5. WARP SIDEWALK TO MATCH.

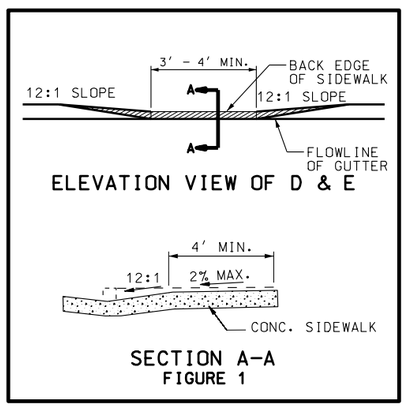

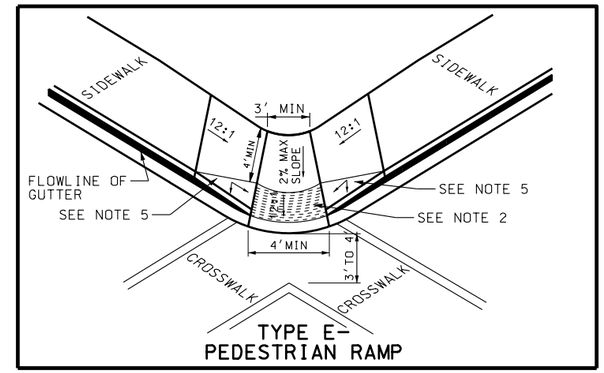

TYPE E–
PEDESTRIAN RAMP

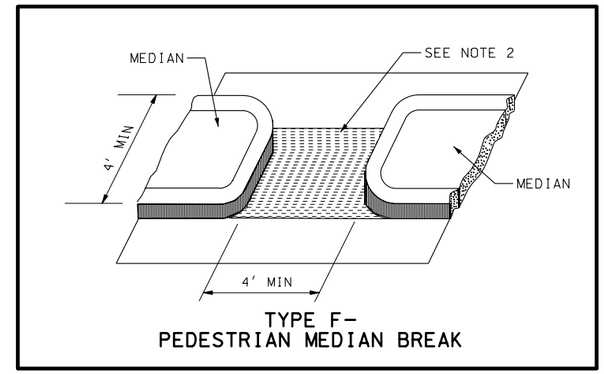

TYPE F–
PEDESTRIAN MEDIAN BREAK

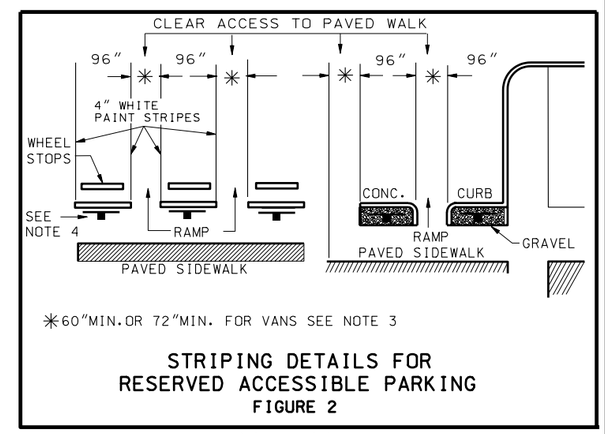

STRIPING DETAILS FOR
RESERVED ACCESSIBLE PARKING
FIGURE 2

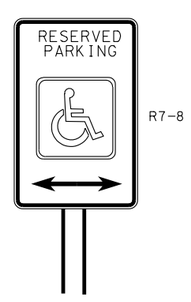

RESERVED ACCESSIBLE
PARKING SIGNING
SEE NOTE 4

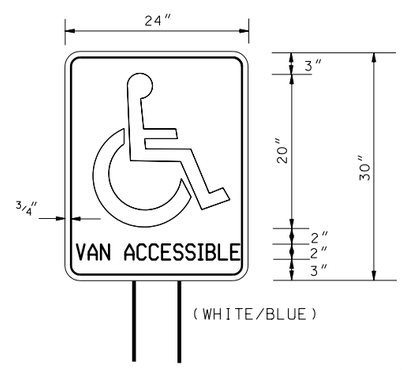

SIGNING FOR "VAN ACCESSIBLE"
PARKING SPACES
SEE NOTE 3

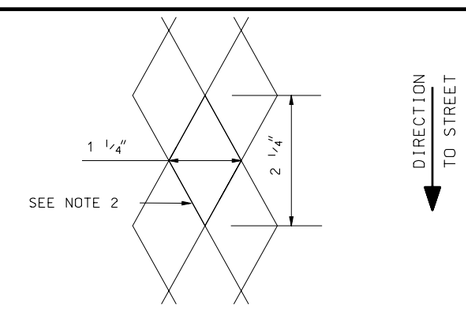

DETECTABLE WARNING
FIGURE 3

REVISIONS

NO.	DATE	APPR.	REMARKS

UTAH DEPARTMENT OF TRANSPORTATION
STANDARD DRAWINGS FOR ROAD AND BRIDGE CONSTRUCTION
SALT LAKE CITY, UTAH

RECOMMENDED FOR APPROVAL — JULY 03,2002 DATE
CHAIRMAN STANDARDS COMMITTEE APPROVED — JULY 03,2002 DATE
DEPUTY DIRECTOR

STANDARD DRAWING TITLE
PEDESTRIAN ACCESS

STD DWG
GW 5

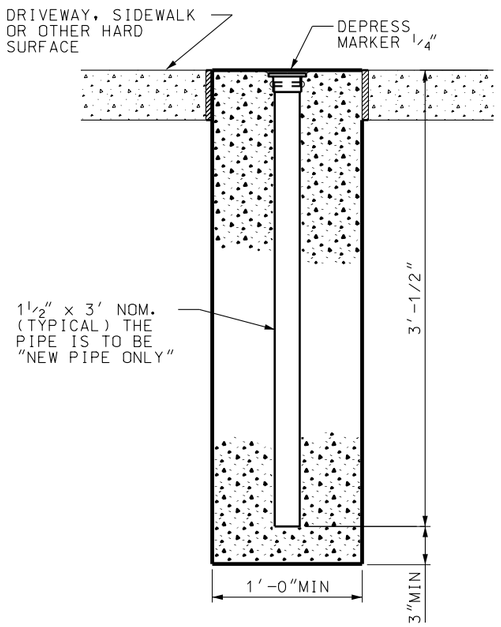

"A"

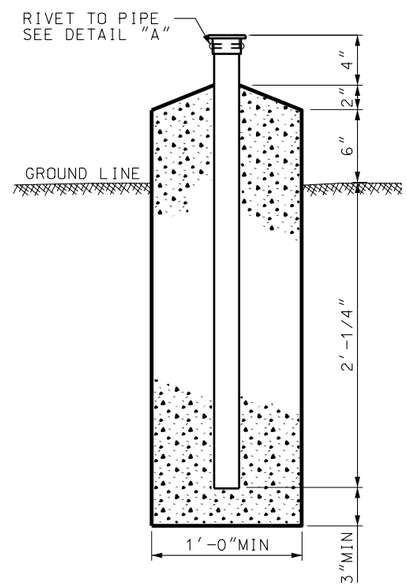

"B"

ALTERNATE INSTALLATIONS

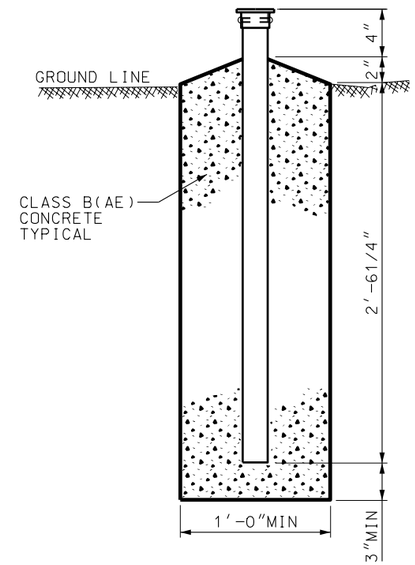

STANDARD INSTALLATION

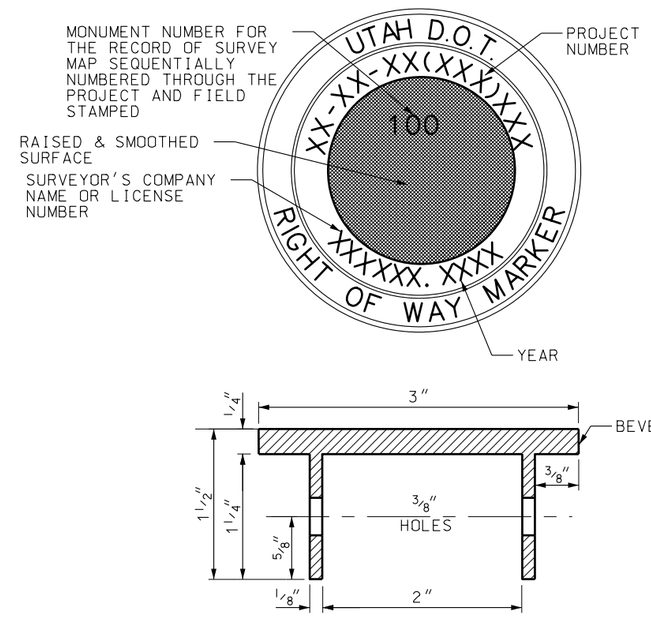

BRONZE CAP
DETAIL "A"

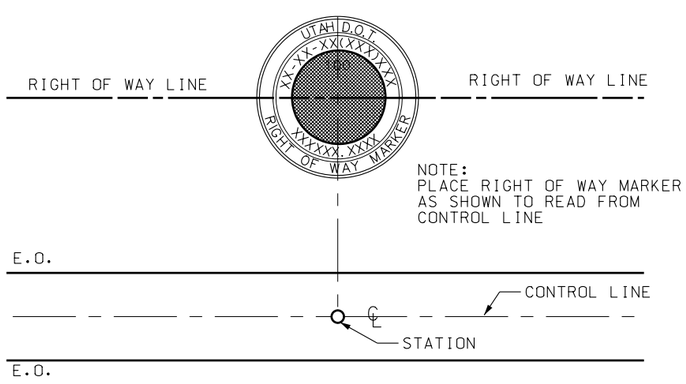

NOTES:

1. PLACE RIGHT OF WAY MARKERS AT EACH ANGLE POINT IN A RIGHT OF WAY LINE. PLACE RIGHT OF WAY MARKERS ON EACH RIGHT OF WAY LINE OPPOSITE THE PS, SC, CS AND ST OR OPPOSITE THE PC AND PT. WHERE THE RIGHT OF WAY PARALLELS THE CENTER LINE OF THE HIGHWAY AROUND A CURVE.
2. PLACE RIGHT OF WAY MARKERS IN ADDITION SO THAT NO INTERVAL WILL EXCEED 1000'. PLACE INTERMEDIATE MARKERS PREFERABLY ON SECTION LINES OR INTERSECTING PROPERTY LINES.
3. GRIND TO A SMOOTH SURFACE ALL EXPOSED SURFACES OF THE BRONZE CAP.
4. DEPRESS ALL LETTERS MINIMUM OF 1/16".
5. USE 3/16" HIGH LETTERS AND FIGURES.
6. USE ALTERNATE "A" INSTALLATION WHEN PLACING TOP OF BRONZE CAP FLUSH WITH HARD SURFACE AREA'
7. USE ALTERNATE "B" INSTALLATION WHEN PLACING MARKERS IN HEAVY BRUSH OR FOREST LANDS
8. ON THE RECORD OF SURVEY MAP SHOW THE STATION, OFFSET, PROJECT COORDINATES AND ELEVATION..

REVISIONS

NO.	DATE	APPR.	REMARKS

UTAH DEPARTMENT OF TRANSPORTATION
STANDARD DRAWINGS FOR ROAD AND BRIDGE CONSTRUCTION
SALT LAKE CITY, UTAH

RECOMMENDED FOR APPROVAL — JULY 03,2002 DATE

CHAIRMAN STANDARDS COMMITTEE APPROVED — JULY 03,2002 DATE

DEPUTY DIRECTOR

STANDARD DRAWING TITLE: RIGHT OF WAY MARKER

STD DWG
GW 6

THROUGH ROAD SPEED MPH	D (FEET)		
	$\frac{V_C}{1.5N - .5} \leq 50$	$50 < \frac{V_C}{1.5N - .5} \leq 400$	$\frac{V_C}{1.5N - .5} > 400$
35	65	100	100
≥ 55	150	150	200

THROUGH ROAD SPEED MPH	D_A (FEET)	
	$NV_CV_M \leq 4000$	$NV_CV_M > 4000$
35	65	200
≥ 55	65	295

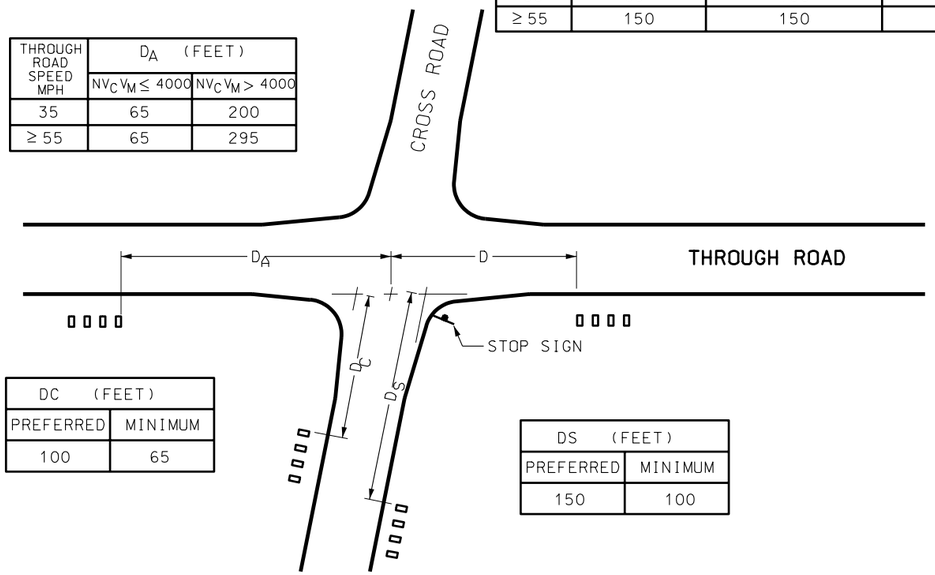

DC (FEET)	
PREFERRED	MINIMUM
100	65

DS (FEET)	
PREFERRED	MINIMUM
150	100

V_C = AVERAGE DAILY TRAFFIC ON CROSS ROAD VEHICLES PER DAY

V_M = AVERAGE DAILY TRAFFIC ON THROUGH ROAD VEHICLES PER DAY

N = NUMBER OF MAILBOXES AT MAIL STOP

MINIMUM CLEARANCE DISTANCE TO NEAREST MAILBOX IN MAIL STOPS AT INTERSECTIONS

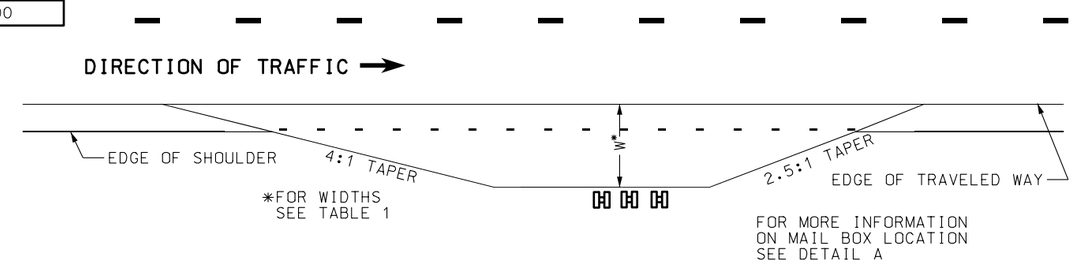

MAIL STOP LAYOUT FOR ROADS CARRYING LOW TRAFFIC SPEEDS ≤ 40 MPH AND FOR LOCAL AND COLLECTORS ROADS CARRYING ≤ 400 VEHICLES PER DAY

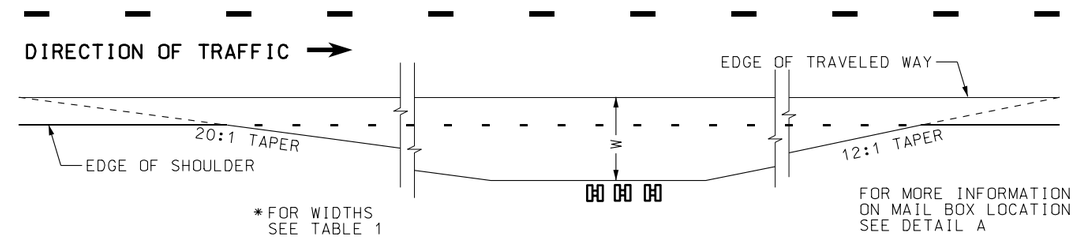

MAIL STOP LAYOUT FOR ROADS CARRYING HIGH SPEED TRAFFIC > 40 MPH

LATERAL PLACEMENT OF MAILBOXES

TABLE 1

HIGHWAY TYPE AND TRAFFIC CONDITIONS	WIDTH OF ALL-WEATHER SURFACE OF TURNOUT OR AVAILABLE SHOULDER AT MAILBOX - FEET		DISTANCE ROADSIDE FACE OF MAILBOX IS TO BE OFFSET BEHIND EDGE OF TURNOUT OR USABLE SHOULDER - INCHES	
	PREFERRED	MINIMUM	PREFERRED	MINIMUM
RURAL HIGHWAY ADT OVER 10,000 VPD	> 12	8	8 TO 12	0
RURAL HIGHWAY ADT = 1,500 TO 10,000 VPD	12	8		
RURAL HIGHWAY ADT = 100 TO 1500 VPD	10	8		
RURAL ROAD ADT UNDER 100 VPD	8	6		10
RURAL ROAD ADT UNDER 50 VPD SPEED = 40 MPH OR LESS	6	2		8
RESIDENTIAL STREET WITHOUT CURB OR ALL-WEATHER SHOULDER	2	0		8 *
CURBED RESIDENTIAL STREET	NOT APPLICABLE		8 TO 12 BEHIND TRAFFIC FACE OF CURB	6 BEHIND TRAFFIC FACE OF CURB

ADT = AVERAGE DAILY TRAFFIC VPD = VEHICLES PER DAY

* IF A TURN OUT IS PROVIDED, THIS MAY BE REDUCED TO ZERO.

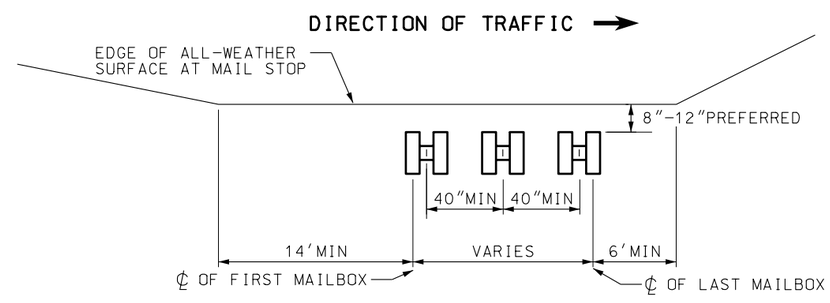

DETAIL A

MAILBOX LOCATION AT MAIL STOP

NO.	DATE	APPR.	REMARKS

REVISIONS

UTAH DEPARTMENT OF TRANSPORTATION
STANDARD DRAWINGS FOR ROAD AND BRIDGE CONSTRUCTION
SALT LAKE CITY, UTAH

RECOMMENDED FOR APPROVAL — JULY 03,2002 DATE

CHAIRMAN STANDARDS COMMITTEE APPROVED — JULY 03,2002 DATE

DEPUTY DIRECTOR

NEWSPAPER AND MAILBOX STOP LAYOUT

STANDARD DRAWING TITLE

STD DWG
GW 7

SHELF

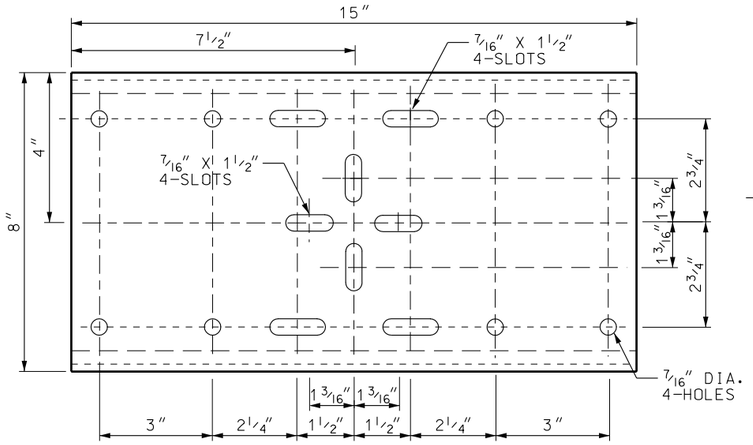

PLATFORM

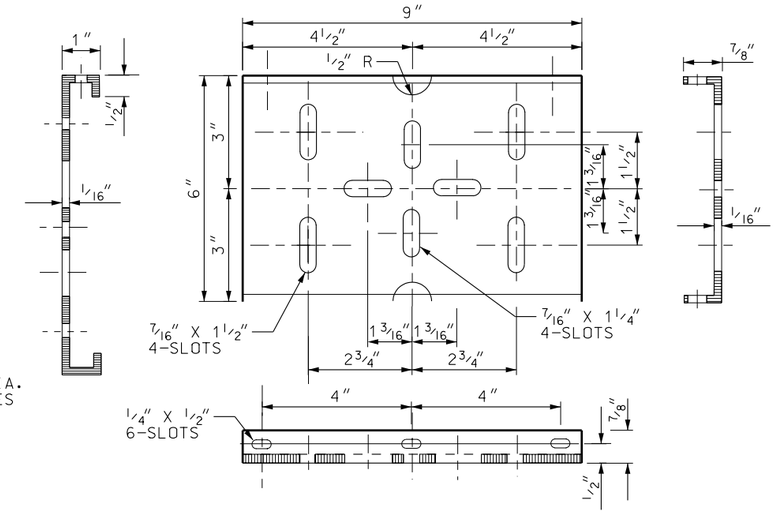

CANTILEVERED MAILBOX SUPPORT

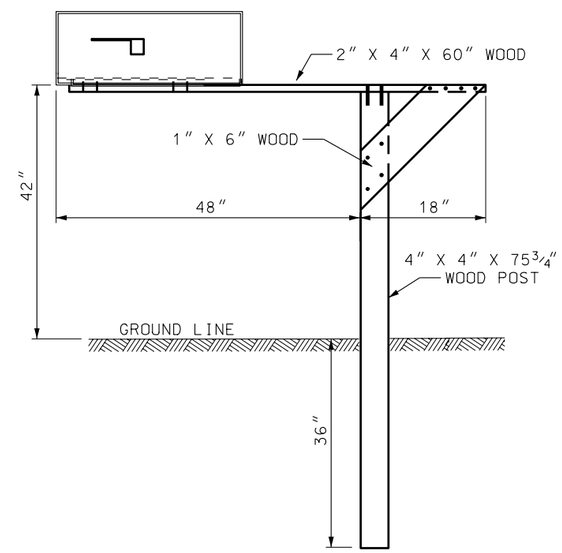

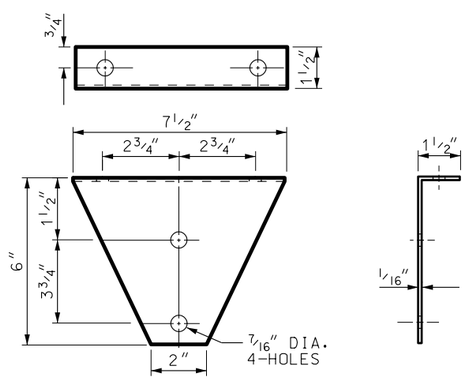

BRACKET

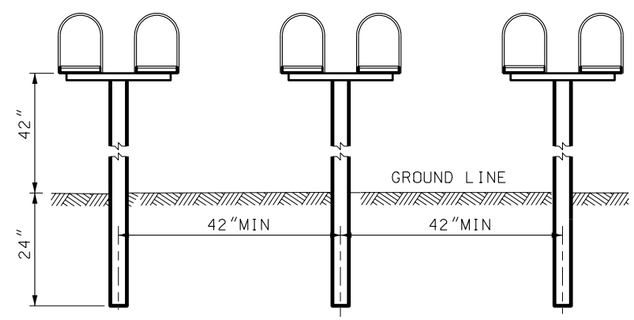

SPACING FOR MULTIPLE POST INSTALLATION

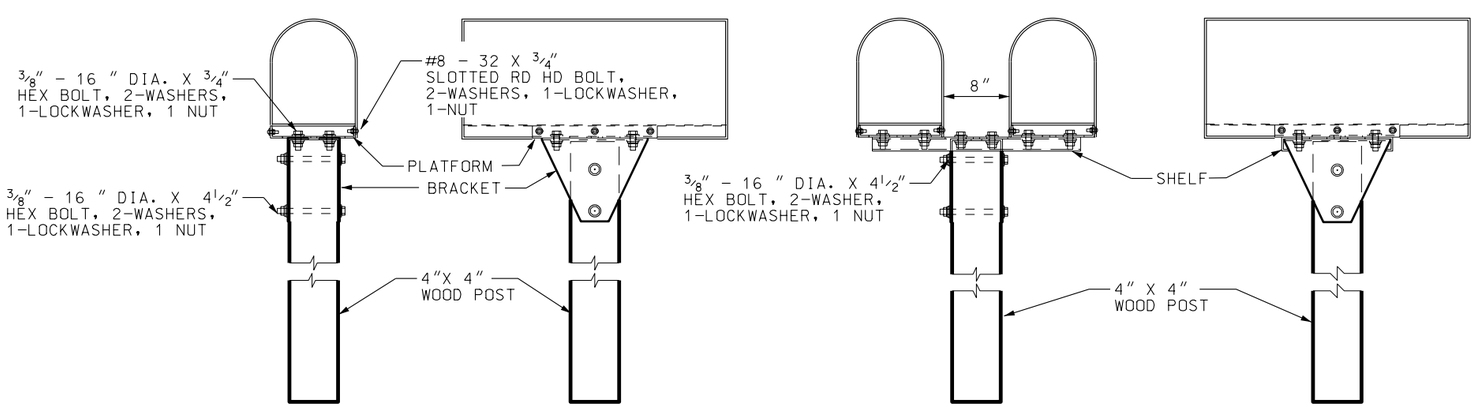

SINGLE AND DOUBLE MAILBOX ASSEMBLIES
SERIES A

NOTE:

1. USE OF ALTERNATE SYSTEMS MEETING NCHRP-350 REQUIREMENTS ALLOWED AS APPROVED BY THE REGION TRAFFIC ENGINEER.

REVISIONS			
NO.	DATE	APPR.	REMARKS

UTAH DEPARTMENT OF TRANSPORTATION
STANDARD DRAWINGS FOR ROAD AND BRIDGE CONSTRUCTION
SALT LAKE CITY, UTAH

RECOMMENDED FOR APPROVAL — JULY 03,2002 DATE

CHAIRMAN STANDARDS COMMITTEE APPROVED — JULY 03,2002 DATE

DEPUTY DIRECTOR

NEWSPAPER AND MAILBOX SUPPORT HARDWARE

STANDARD DRAWING TITLE

STD DWG
GW 8

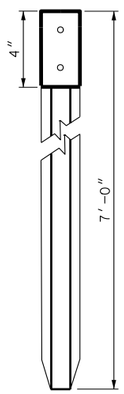

TYPE I
SINGLE UNIT
SEE NOTE 1

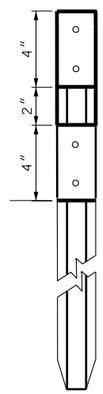

TYPE II
DOUBLE UNIT
SEE NOTE 1

(OF COLOR SPECIFIED)

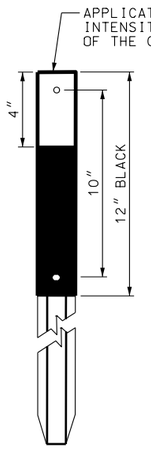

CULVERT MARKER
SEE NOTE 2

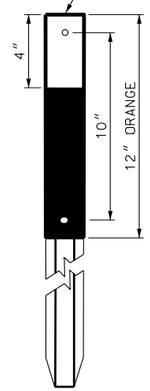

MAINTENANCE MARKER
SEE NOTE 2

FREEWAY TURNAROUND MARKER
SEE NOTE 9

NOTES:

1. USE GALVANIZED STEEL POSTS FABRICATED WITH 5/16" HOLES ON 1" SPACING. PUNCH HOLES ON THE CENTERLINE OF THE POST. PLACE TOP HOLE 1" FROM THE TOP OF POST. PUNCH HOLES THE FULL LENGTH OF THE POST.
2. PAINT THE SPECIFIED COLOR OR ATTACH 3" X 12" X 1/10" COLORED PLASTIC ON CULVERT AND MAINTENANCE MARKERS. USE BLACK ABOVE ORANGE WHEN BOTH MARKERS (MAINTENANCE AND CULVERT) ARE REQUIRED ON ONE DELINEATOR.
3. MOUNT BARRIER REFLECTORS ON CONCRETE AND BRIDGE PARAPETS WITH TWO 1/4" X 1/4" METAL HIT ANCHORS.
4. MOUNT BARRIER REFLECTORS ON CONCRETE BARRIER AS SHOWN ON STD DWG BA 2A.
5. MOUNT STRAIGHT REFLECTORS ON WOOD POSTS WITH TWO 2 1/2" ELECTRO GALVANIZED RING SHANK NAILS WITH NEOPRENE WASHERS.
6. MOUNT STRAIGHT REFLECTORS ON STEEL POSTS WITH TWO 1/4" X 3/4" BOLTS AND SELF LOCKING NUTS.
7. MOUNT BARRIER REFLECTORS ON GUARDRAIL POSTS AS SHOWN ON STD DWG BA 4A.
8. INSTALL DELINEATOR PLATE ON THE SIDE OF THE POST FACING TRAFFIC. PREFERRED ORIENTATION OF POST TO ONCOMING TRAFFIC IS AS SHOWN. HOWEVER, EXISTING POST WITH THE OPPOSITE ORIENTATION IS ACCEPTABLE. INSTALL ON OPEN FACE SIDE WITH TWO 1/4" DIAMETER EXPANSION RIVETS (GRIP RANGE 1 3/8" TO 1 5/8"). INSTALL ON OPPOSITE SIDE WITH TWO 1/4" POP RIVETS WITH BACKING WASHERS.
9. REFER TO STD DWG ST 2 FOR FREEWAY TURNAROUND DELINEATION MARKINGS AND HARDWARE.

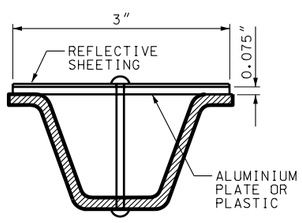

DELINEATOR INSTALLATION
SEE NOTE 8

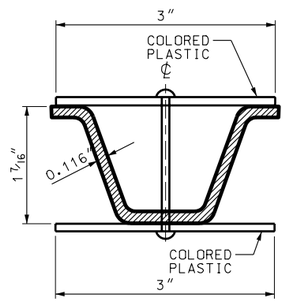

CULVERT/MAINTENANCE MARKER INSTALLATION

FOR 2 LB/FT POST WITH COLORED PLASTIC ATTACHED. SEE NOTE 2.

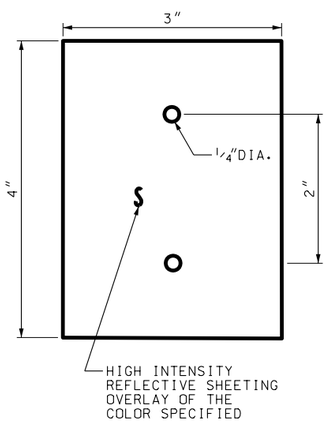

DELINEATOR PLATE
SEE NOTE 8

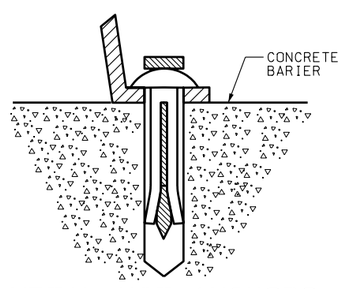

METAL HIT ANCHORS
SEE NOTE 3

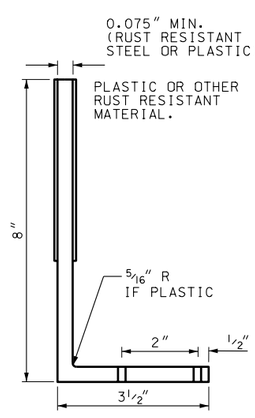

"L" REFLECTOR

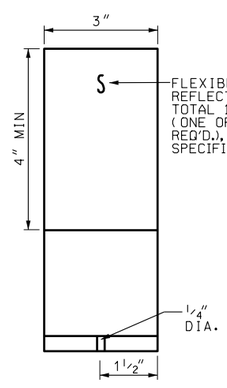

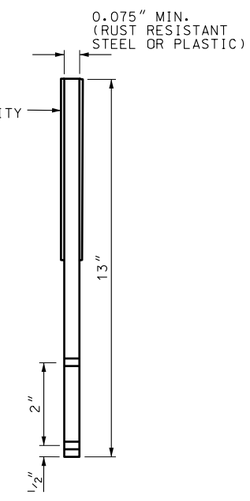

STRAIGHT REFLECTOR

BARRIER REFLECTORS
SEE NOTES 3, 4, 5, 6, 7

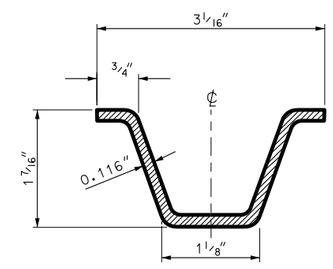

CROSS SECTION
FOR 2 LB/FT POST

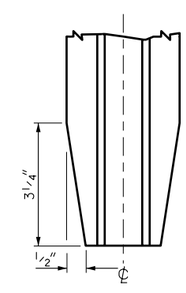

POST TAPER DETAIL

NO.	DATE	APPR.	REMARKS

REVISIONS

UTAH DEPARTMENT OF TRANSPORTATION
STANDARD DRAWINGS FOR ROAD AND BRIDGE CONSTRUCTION
SALT LAKE CITY, UTAH

RECOMMENDED FOR APPROVAL — JULY 03,2002 DATE

CHAIRMAN STANDARDS COMMITTEE APPROVED — JULY 03,2002 DATE

DEPUTY DIRECTOR

DELINEATION HARDWARE
STANDARD DRAWING TITLE

STD DWG
GW 9

ACCELERATION LANE

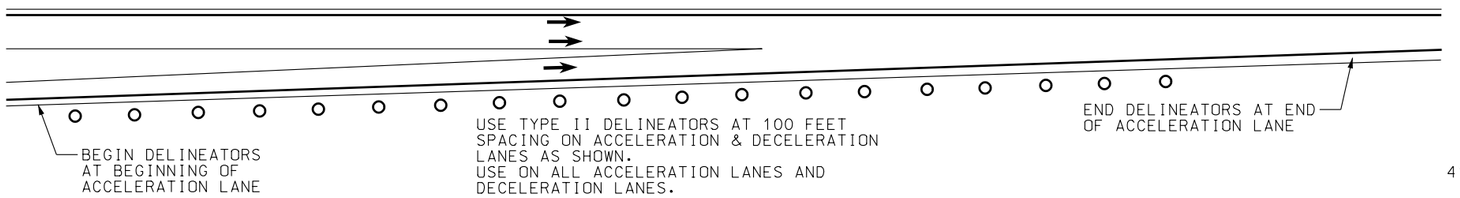

DECELERATION LANE

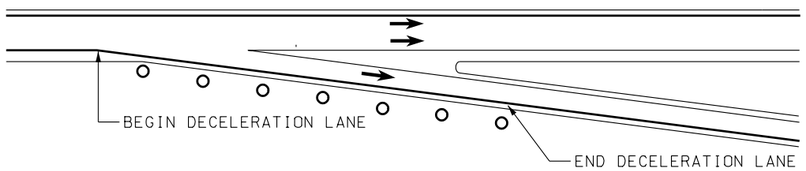

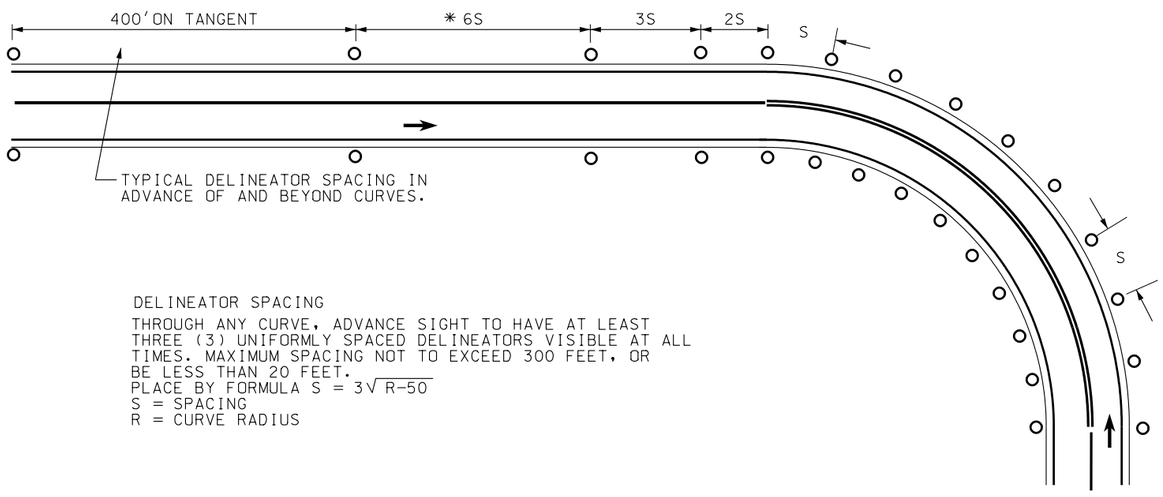

DELINEATOR SPACING

THROUGH ANY CURVE, ADVANCE SIGHT TO HAVE AT LEAST THREE (3) UNIFORMLY SPACED DELINEATORS VISIBLE AT ALL TIMES. MAXIMUM SPACING NOT TO EXCEED 300 FEET, OR BE LESS THAN 20 FEET.

PLACE BY FORMULA $S = 3\sqrt{R-50}$

S = SPACING

R = CURVE RADIUS

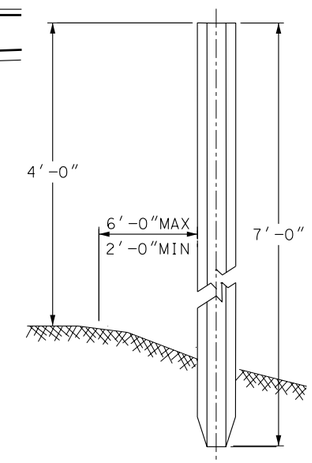

DELINEATOR

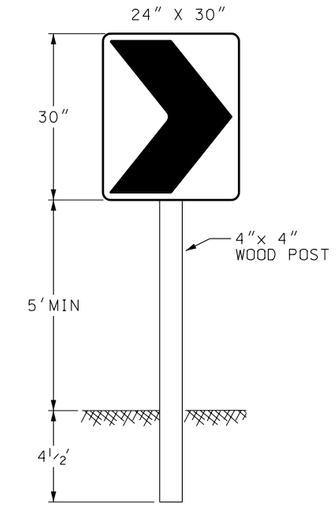

CHEVRON ALIGNMENT PANEL

NOTES:

1. BARRIERS ARE DEFINED AS BEING GUARDRAIL, CONCRETE BARRIER & BRIDGE PARAPET WALL.
2. MOUNT BARRIER REFLECTORS ON ENTIRE LENGTH OF BARRIER AS PER BARRIER TYPE STANDARD. USE REFLECTOR SPACING (L) OF 50 FEET IN PERMANENT LOCATIONS, AND 25 FEET FOR TEMPORARY SITUATIONS. USE REFLECTOR COLOR TO MATCH THE PAINT STRIPE.
3. IF GUARDRAIL IS NOT ATTACHED INSTALL OBJECT MARKER OM-3R IN PLACE OF DELINEATOR AT LEADING EDGE OF BRIDGE PARAPET.
4. IF POSTED SPEED EXCEEDS A CURVE ADVISORY SPEED BY 15 MPH OR GREATER, INSTALL CHEVRON ALIGNMENT PANELS. FOR ADVANCE SIGN,USE AT LEAST TWO UNIFORMLY SPACED PANELS VISIBLE AT ALL TIMES. THE FIRST PANEL TO BE VISIBLE AT LEAST 500 FEET BEFORE THE CURVE.

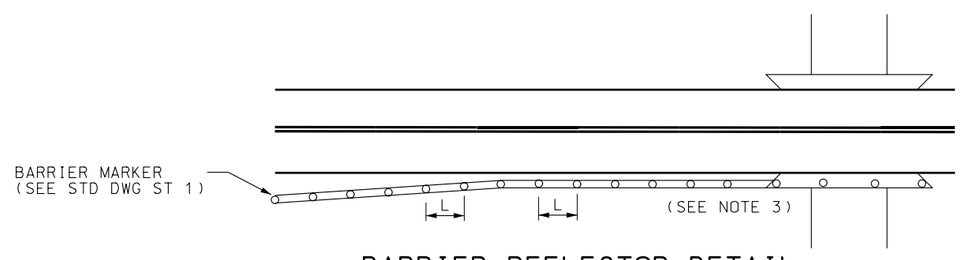

BARRIER REFLECTOR DETAIL
(SEE NOTE 2)

REVISIONS			
NO.	DATE	APPR.	REMARKS

UTAH DEPARTMENT OF TRANSPORTATION
STANDARD DRAWINGS FOR ROAD AND BRIDGE CONSTRUCTION
SALT LAKE CITY, UTAH

RECOMMENDED FOR APPROVAL — JULY 03,2002 DATE

CHAIRMAN STANDARDS COMMITTEE APPROVED — JULY 03,2002 DATE

DEPUTY DIRECTOR

STANDARD DRAWING TITLE: DELINEATION APPLICATION

STD DWG
GW 10

JOINTS FOR HIGHWAYS WITH CONCRETE TRAFFIC LANES AND SHOULDERS

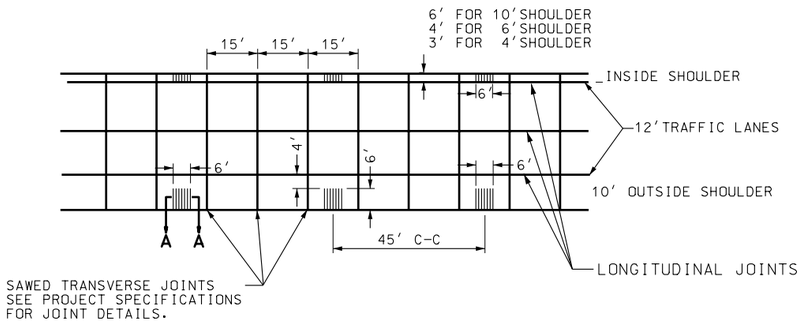

TYPICAL JOINT LOCATION
AND RUMBLE STRIP DETAIL

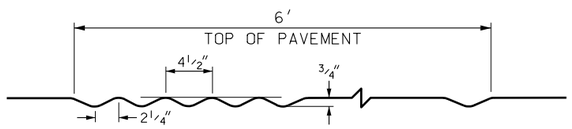

SECTION A–A
URBAN AND/OR RURAL

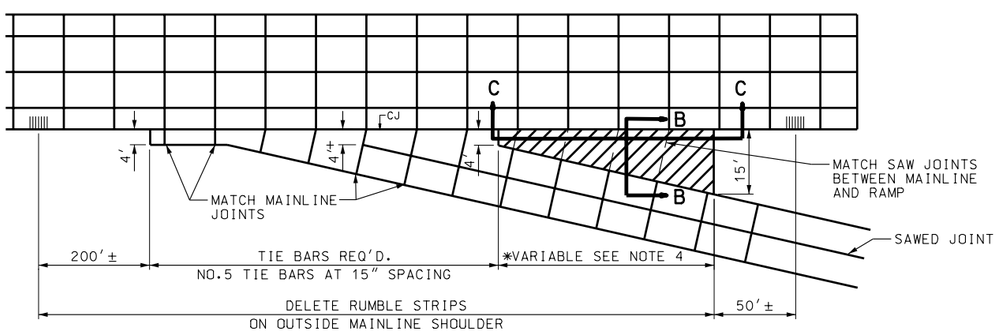

SHOULDER TRANSITION FOR RAMPS
RAMP GORE PAVING DETAIL

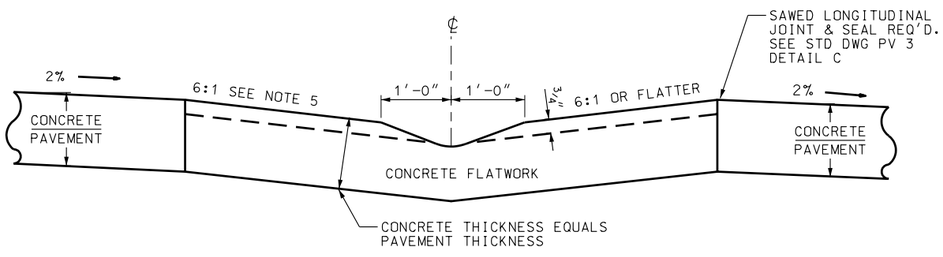

SECTION B–B

NOTES:

1. DO NOT PLACE RUMBLE STRIPS OVER STRUCTURES.
2. IN FORMING THE RUMBLE STRIP REMOVE EXCESS MATERIAL SUCH THAT THERE IS NO PROJECTION OF THE CONCRETE ABOVE THE FINISH GRADE OF THE PAVEMENT.
3. RUMBLE STRIPS NOT REQUIRED WHERE CONCRETE CURB & GUTTER IS PLACED.
4. ESTIMATED QUANTITIES FOR CONCRETE FLATWORK ARE CALCULATED ON TANGENT SECTION. IN ALL CASES LENGTH OF GORE PAVING WILL BE CARRIED AHEAD UNTIL THE DISTANCE BETWEEN PAVING IS 15 feet.
5. SLOPE MAY VARY TO MEET DESIGN CONDITIONS ON RAMP AND MAINLINE. GRADE TO DRAIN, ADJUST FOR FIELD CONDITIONS. CORRUGATIONS NORMAL TO MAINLINE.
6. CONTACT JOINT (CJ) TIE BARS REQUIRED AT ALL LOCATIONS WHERE CONCRETE IS TO BE EXTENDED SEE STD DWG PV 3 AND PV 4 FOR JOINS DETAILS.

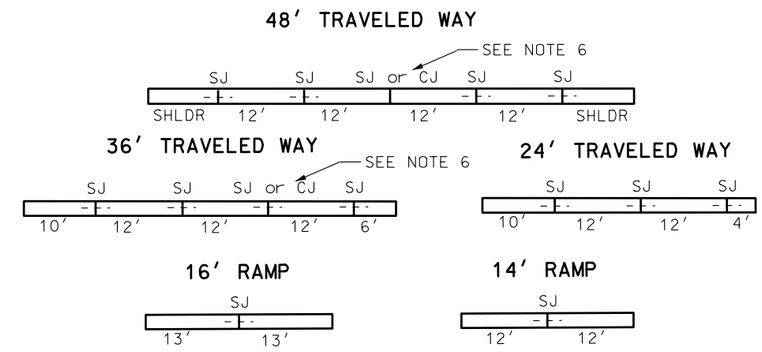

REQUIRED PAVING CONFIGURATIONS

CJ – CONTACT JOINT
SJ – SAW JOINT

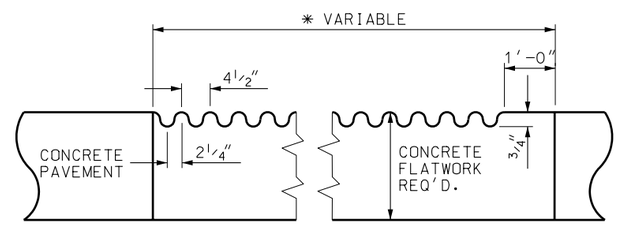

SECTION C–C

NO.	DATE	APPR.	REMARKS

REVISIONS

UTAH DEPARTMENT OF TRANSPORTATION
STANDARD DRAWINGS FOR ROAD AND BRIDGE CONSTRUCTION
SALT LAKE CITY, UTAH

RECOMMENDED FOR APPROVAL — JULY 03,2002 DATE

CHAIRMAN STANDARDS COMMITTEE APPROVED — JULY 03,2002 DATE

DEPUTY DIRECTOR

JOINTS FOR HIGHWAYS WITH CONCRETE TRAFFIC LANES AND SHOULDERS
STANDARD DRAWING TITLE

STD DWG
PV 1

PAVEMENT / APPROACH SLAB DETAILS

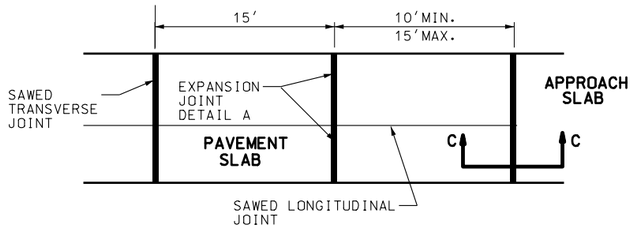

NORMAL APPROACH SLAB

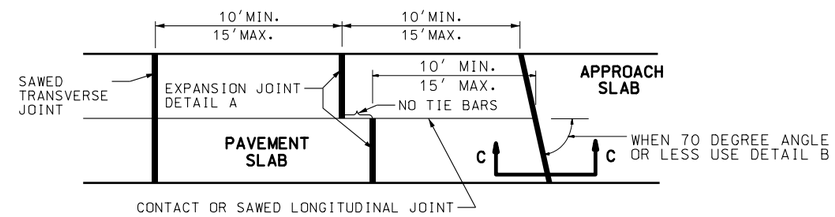

SKEWED APPROACH SLAB

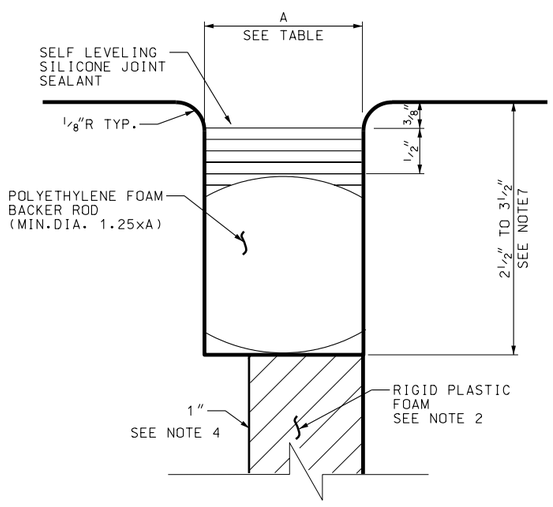

DETAIL "D"

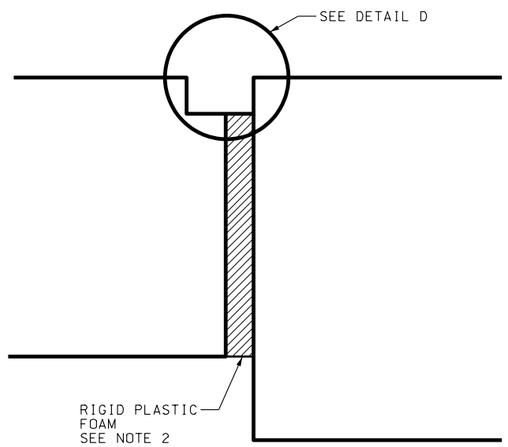

SECTION C-C

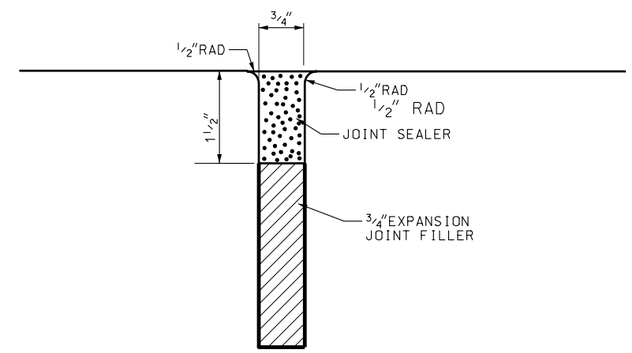

DETAIL "A"
(EXPANSION JTS.)

NOTES:

1. PLACE A TUBE OVER THE LUBRICATED END OF ALL DOWEL BARS AND PROVIDE A MINIMUM 2″ CLEARANCE POCKET ASSURED BY MEANS OF A POSITIVE SPACING DEVICE.
2. USE CLOSED CELL,RIGID PLASTIC FOAM. CUT RIGID PLASTIC FOAM TO CONFORM TO THE CROSS SECTION OF THE PAVEMENT AND FURNISH IN STRIPS EQUAL TO THE WIDTH OF THE PAVEMENT SLAB. MAKE THE TOP SURFACE SMOOTH AND HAVE HOLES PUNCHED FOR THE DOWEL BARS. PROVIDE A SNUG FIT WITHOUT LOSS IN THICKNESS OF THE MATERIAL.
3. PLACE DOWEL BARS PARALLEL TO THE CONTROL LINE AND SURFACE OF THE SLAB AT MID DEPTH OF PAVEMENT.
4. FOR BRIDGES GREATER THAN 250 feet LENGTH, USE 1 1/2″ FOR TEMPERATURES LESS THAN 50°F. AT TIME OF ROADWAY PAVING.
5. DO NOT INSTALL JOINT SEALANT ABOVE 90°F. OR BELOW 50°F.
6. FOR STEPPED END APPROACH SLABS, APPLY DETAIL D ALONG LONGITUDINAL EDGES OF STEP. HOWEVER, DO NOT PLACE DOWELS ALONG LONGITUDINAL EDGES.
7. DEPTH TO BE DETERMINED BY CONTRACTOR BASE ON ACTUAL COMPRESSED BACKER ROD HEIGHT.

APPROACH SLAB JOINT WIDTH (in)

TEMPERATURE (DEG F)	DIMENSION A (FOR BRIDGES GREATER THAN 250′ LENGTH)	DIMENSION A (FOR ALL OTHER BRIDGES)
90	1 1/4 (SEE NOTE 5)	1 1/4 (SEE NOTE 5)
60	1 3/4	1 1/2
35	2	1 1/4 (SEE NOTE 5)

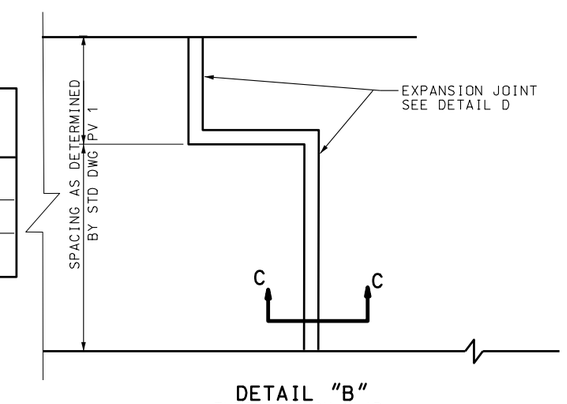

DETAIL "B"
TYPICAL EACH SLAB

REVISIONS

NO.	DATE	APPR.	REMARKS

UTAH DEPARTMENT OF TRANSPORTATION
STANDARD DRAWINGS FOR ROAD AND BRIDGE CONSTRUCTION
SALT LAKE CITY, UTAH

RECOMMENDED FOR APPROVAL — JULY 03,2002 DATE

CHAIRMAN STANDARDS COMMITTEE APPROVED — JULY 03,2002 DATE

DEPUTY DIRECTOR

PAVEMENT/APPROACH SLAB DETAILS

STANDARD DRAWING TITLE

STD DWG
PV 2

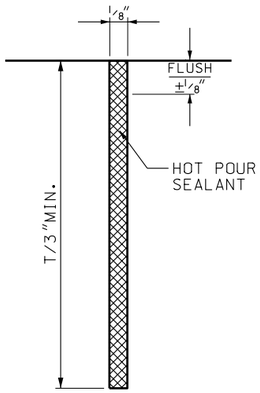

DETAIL "A"

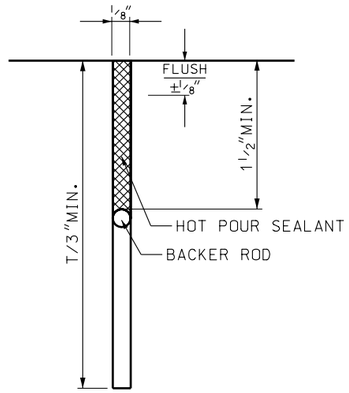

DETAIL "B"
OPTIONAL INSTALLATION

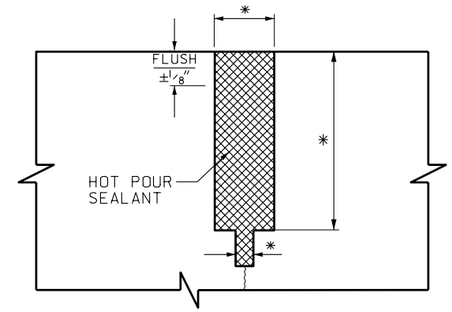

DETAIL "D"

EXISTING SILICONE JOINT
REHAB DETAIL

* ALL DIMENSIONS AS PER
EXISTING PAVEMENT

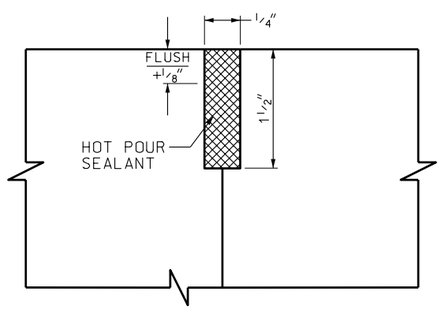

DETAIL "C"

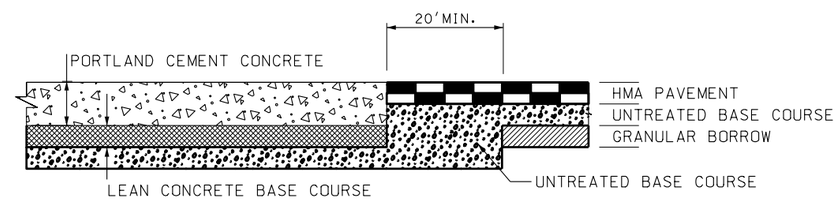

CONCRETE TO FLEXIBLE
PAVEMENT TRANSITION
DETAIL "E"

NO.	DATE	APPR.	REMARKS

REVISIONS

UTAH DEPARTMENT OF TRANSPORTATION
STANDARD DRAWINGS FOR ROAD AND BRIDGE CONSTRUCTION
SALT LAKE CITY, UTAH

RECOMMENDED FOR APPROVAL — JULY 03,2002 DATE

CHAIRMAN STANDARDS COMMITTEE APPROVED — JULY 03,2002 DATE

DEPUTY DIRECTOR

CONCRETE PAVEMENT
DETAILS FOR URBAN
AND INTERSTATE

STANDARD DRAWING TITLE

STD DWG
PV 3

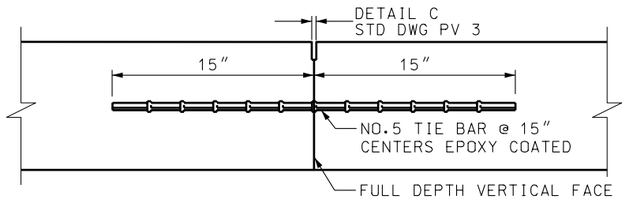

LONGITUDINAL CONTACT JOINT (CJ)
DETAIL "A"

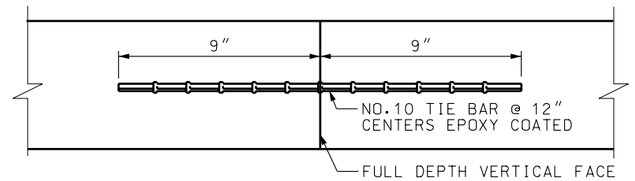

CONTACT JOINT
DETAIL "B"
FOR MID PANEL REPLACEMENT

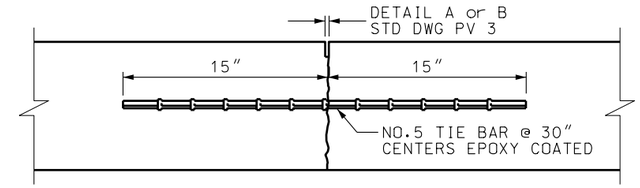

SAWED LONGITUDINAL JOINT
DETAIL "C"

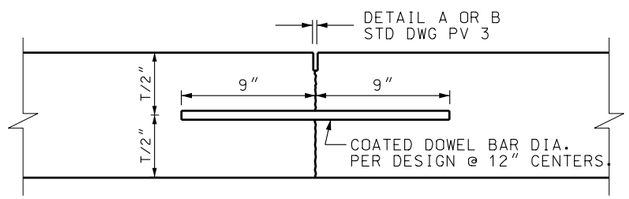

LOAD TRANSFER DOWEL BAR PLACEMENT
TRANSVERSE JOINT
DETAIL "D"

PROVIDE DOWEL BARS PARALLEL TO THE CENTERLINE AND TO THE PAVEMENT SURFACE (1/4″)
LIMIT TO 1/4″ DEVIATIONS FROM PARALLEL IN THE LENGTH OF THE DOWEL±BARS.

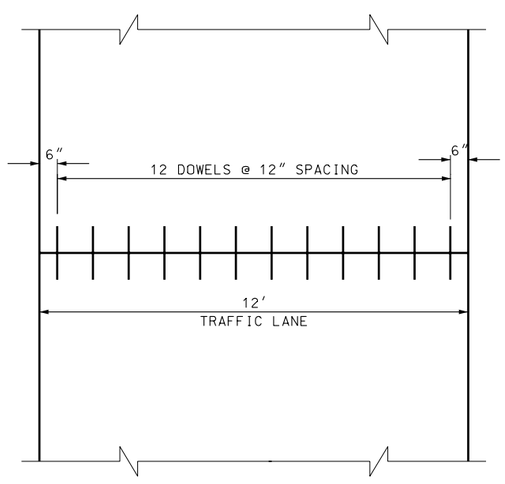

LOAD TRANSFER DOWEL BAR LAYOUT

TYPICAL PAVEMENT PANEL REPLACEMENT

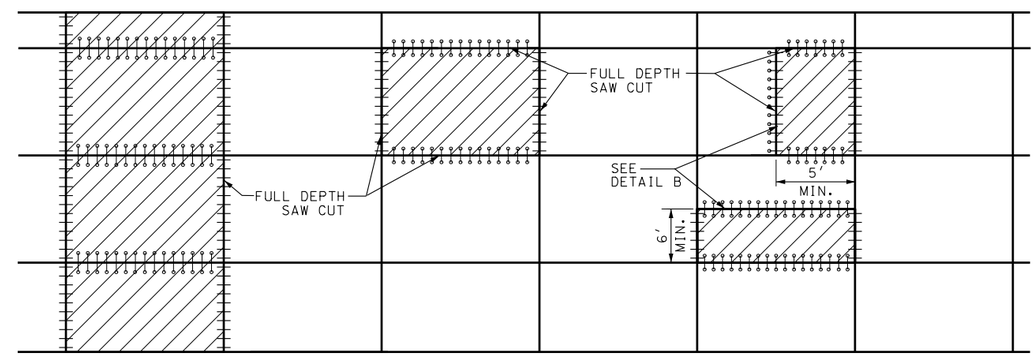

FULL WIDTH REPLACEMENT

— DOWEL BARS
@ 12″ O.C.

⊶ TIE BARS
@ 15″ O.C. FOR CONTACT JT.
@ 30″ O.C. FOR SAWED JT.

FULL PANEL REPLACEMENT

— DOWEL BARS @ 12″ O.C.
⊶ TIE BARS @ 15″ O.C.

PARTIAL PANEL REPLACEMENT

⊶ TIE BARS @ 15″ O.C.
— DOWEL BARS @ 12″ O.C.
⊶ TIE BARS @ 12″ O.C.

DOWELS – EPOXY COATED

SMOOTH BAR 1 1/4″ x 18″

TIE BARS – EPOXY COATED

LONGITUDINAL SAWED	NO.5 x 30″ DEFORMED REBAR
LONGITUDINAL CONTACT	NO.5 x 18″ " "
TRANSVERSE	NO.10 x 18″ " "

O.C. = ON CENTER

REVISIONS

NO.	DATE	APPR.	REMARKS

UTAH DEPARTMENT OF TRANSPORTATION
STANDARD DRAWINGS FOR ROAD AND BRIDGE CONSTRUCTION
SALT LAKE CITY, UTAH

RECOMMENDED FOR APPROVAL — JULY 03,2002 DATE

CHAIRMAN STANDARDS COMMITTEE APPROVED — JULY 03,2002 DATE

DEPUTY DIRECTOR

CONCRETE PAVEMENT
DETAILS FOR URBAN
AND INTERSTATE

STANDARD DRAWING TITLE

STD DWG
PV 4

CONCRETE PAVEMENT DETAILS

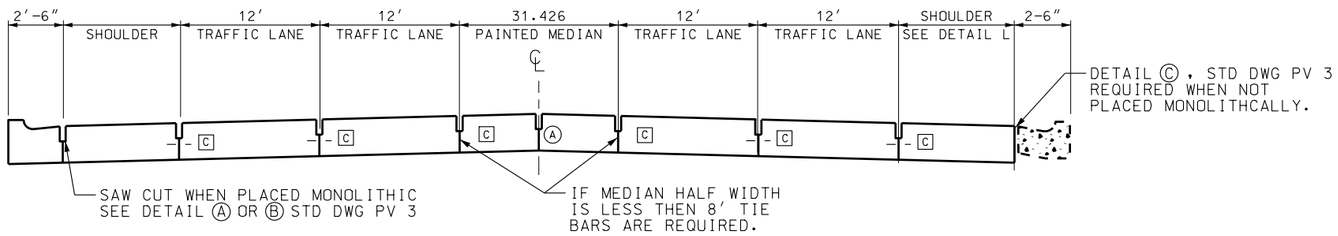

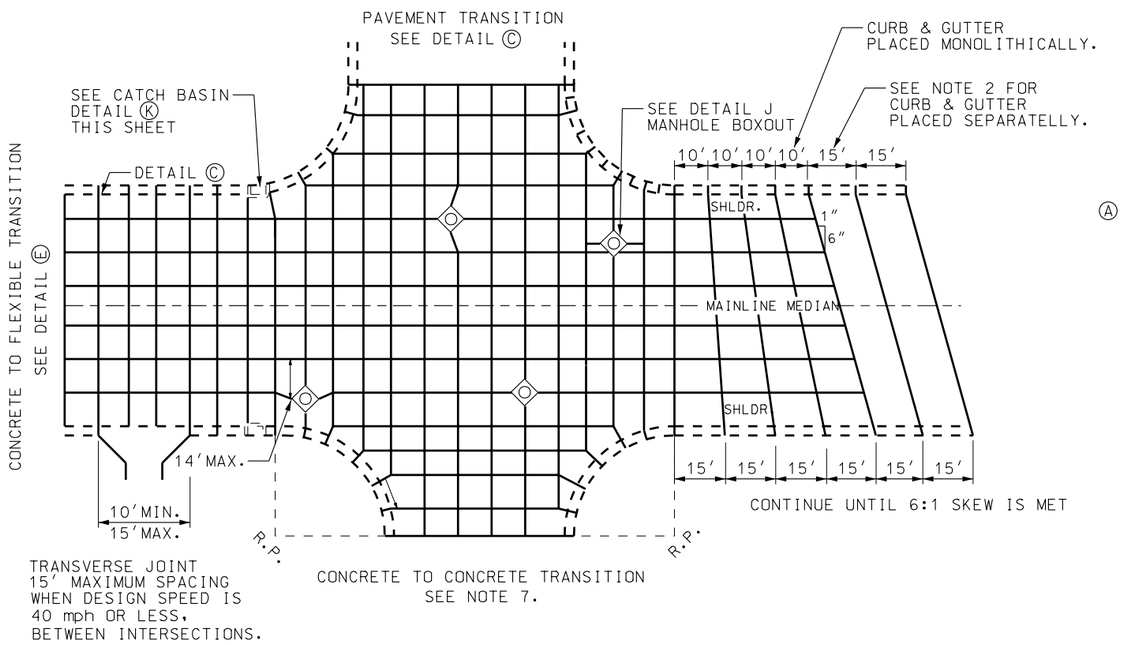

INTERSECTION JOINT LAYOUT

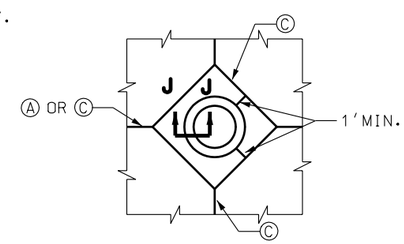

MANHOLE BOXOUT
DETAIL J

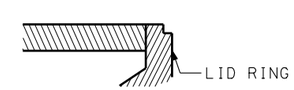

SECTION J- J

NOTES:

1. CURB & GUTTER JOINTS TO BE CONTINUOUS WITH PAVEMENT WHEN PLACED MONOLITHICALLY WITH PAVEMENT.
2. CURB & GUTTER JOINTS NORMAL TO THE FLOWLINE AND AT ONE HALF THE PAVEMENT JOINT SPACING, WHEN PLACED SEPARATELLY FROM THE PAVEMENT.
3. WHERE CONCRETE PAVEMENT IS PLACED AGAINST EXISTING CURB & GUTTER, DRIVEWAYS AND WALKWAYS PLACE A BOND BREAKER AS SHOWN IN DETAIL L AND SECTION K-K
4. REFER TO PROJECT SPECIFICATIONS FOR JOINT INFORMATION AND DETAILS.
5. PREFERRED TRANSVERSE JOINT LOCATIONS ARE: MORE THAN 5' FROM LARGE APPURTENANCES WITH NO BOXOUT: OR AT THE CORNER OF RECTANGULAR BOXOUTS OR APPURTENANCES.
6. WHEN A JOINT FALLS WITHIN 5' OF OR CONTACTS BASINS, MANHOLES, OR OTHER STRUCTURES, SHORTEN ONE OR MORE PANELS EITHER SIDE OF OPENING TO PERMIT JOINT TO FALL AT CORNERS OF RECTANGULAR STRUCTURES.
7. DETAIL C REQ'D. WHEN CROSS STREET IS CONCRETE AND AT STRUCTURES.
8. SEE STD DWG GW 3 FOR CURG & GUTTERS DETAILS.
9. SEE STD DWG GW 6 FOR DRIVEWAY DETAILS.
10. LETTER INSIDE ◯ DENOTES DETAIL, STD DWG PV 3
11. LETTER INSIDE ☐ DENOTES DETAIL, STD DWG PV 4

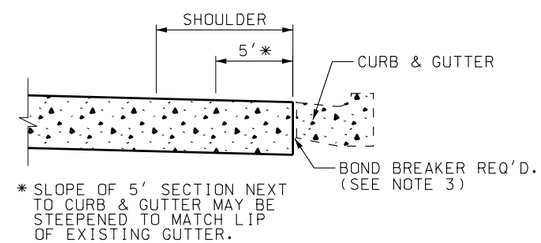

DETAIL L

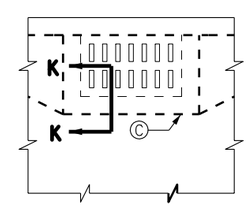

CATCH BASIN
DETAIL K

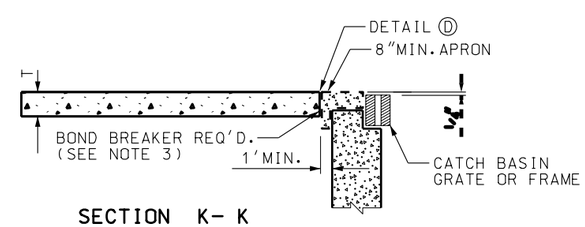

SECTION K- K

NO.	DATE	APPR.	REMARKS

REVISIONS

UTAH DEPARTMENT OF TRANSPORTATION
STANDARD DRAWINGS FOR ROAD AND BRIDGE CONSTRUCTION
SALT LAKE CITY, UTAH

RECOMMENDED FOR APPROVAL — JULY 03,2002 DATE
CHAIRMAN STANDARDS COMMITTEE APPROVED — JULY 03,2002 DATE
DEPUTY DIRECTOR

URBAN CONCRETE PAVEMENT DETAILS
STANDARD DRAWING TITLE

STD DWG
PV 5

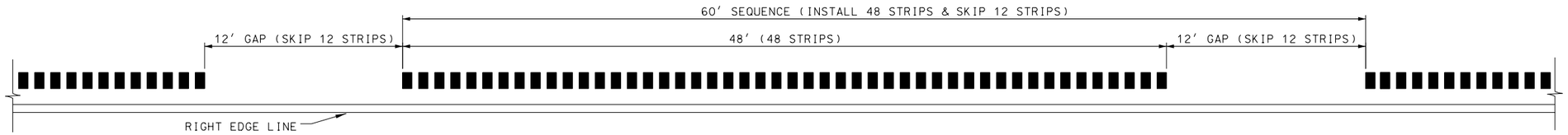

TYPICAL GAPPING DETAIL

TABLE 1
LONGITUDINAL RUMBLE STRIP APPLICATION

ROADWAY TYPE	RIGHT SHOULDER WIDTH (RSW)	GROOVE WIDTH (BOTH SHOULDERS)	LOCATION OF RIGHT SHOULDER STRIP
UNDIVIDED	< 4′	6″	EDGE LINE
UNDIVIDED	≥ 4′	8″	12″ OFFSET FROM EDGE LINE
DIVIDED	< 6′	8″	EDGE LINE OR 4″ OFFSET
DIVIDED	≥ 6′	12″	12″ OFFSET FROM EDGE LINE

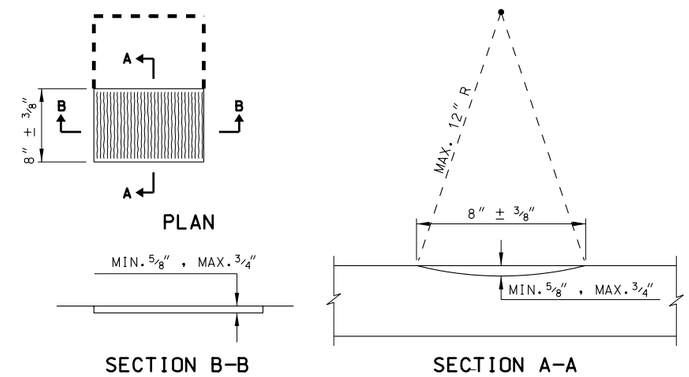

RUMBLE STRIP DETAILS

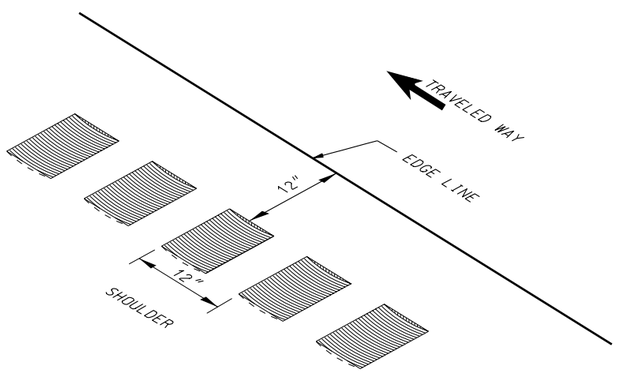

TYPICAL SHOULDER INSTALLATION
LEFT SHOULDER DETAIL

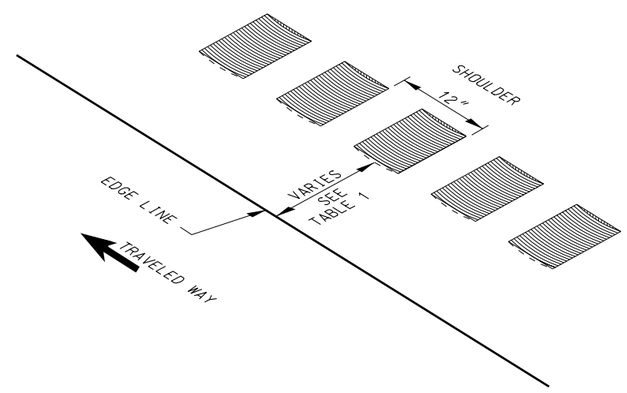

TYPICAL SHOULDER INSTALLATION
RIGHT SHOULDER DETAIL

NOTES:

1. MILL RUMBLE STRIPS TO LEAVE A RECTANGULAR SHAPE WITH UNIFORM EDGES. DO NOT DAMAGE ADJACENT PAVEMENT DURING MILLING OPERATION.
2. DO NOT PLACE RUMBLE STRIPS ON STUCTURES OR APPROACH SLABS.
3. RESTART RUMBLE STRIP SEQUENCE (48 STRIPS, SKIP 12 STRIPS) WHEN RUMBLE STRIPS ARE HALTED OR INTERRUPTED.

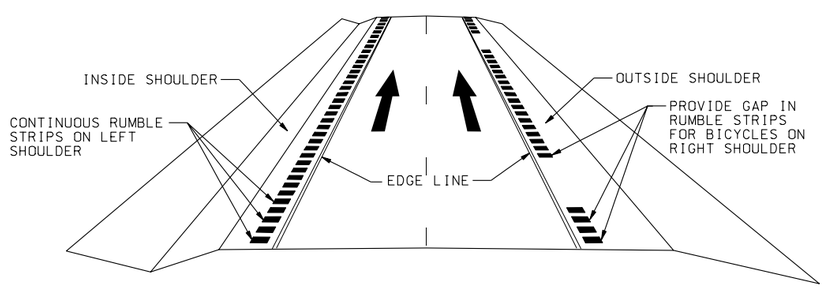

PERSPECTIVE VIEW (MULTI-LANE ROADWAY)

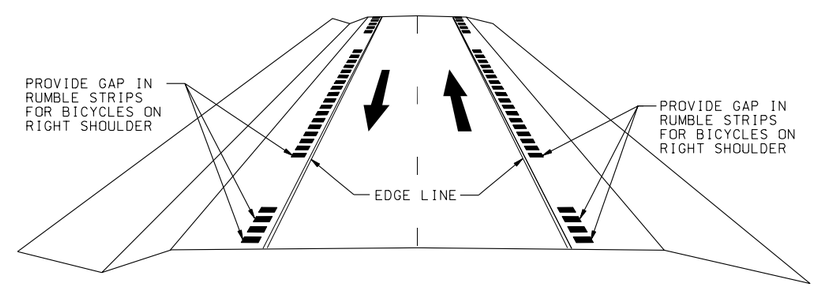

PERSPECTIVE VIEW (TWO-LANE ROADWAY)

REVISIONS

NO.	DATE	APPR.	REMARKS

UTAH DEPARTMENT OF TRANSPORTATION
STANDARD DRAWINGS FOR ROAD AND BRIDGE CONSTRUCTION
SALT LAKE CITY, UTAH

RECOMMENDED FOR APPROVAL — JULY 03,2002 DATE

CHAIRMAN STANDARDS COMMITTEE APPROVED — JULY 03,2002 DATE

DEPUTY DIRECTOR

STANDARD DRAWING TITLE: RUMBLE STRIPS

STD DWG: PV 6

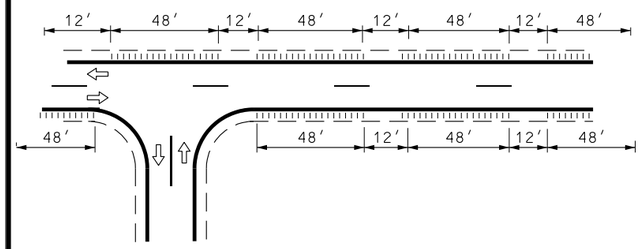

INSTALLATION ON
HIGHWAYS WITH NO ACCESS CONTROL
(SEE NOTE 4)

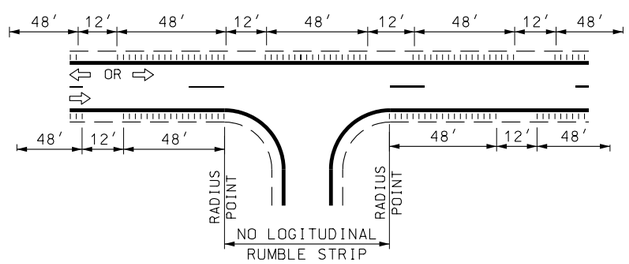

TYPICAL HEAVY USE DRIVEWAY
OR CROSSROAD EXCEPTION DETAIL

USE CONTINUOUS RUMBLE STRIP ON
LEFT SHOULDER IN ONE WAY TRAFFIC
SITUATIONS.

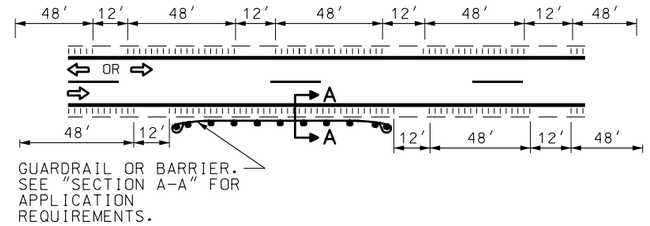

TYPICAL GUARDRAIL AND/OR BARRIER

USE CONTINUOUS RUMBLE STRIP ON
LEFT SHOULDER IN ONE WAY TRAFFIC
SITUATIONS.

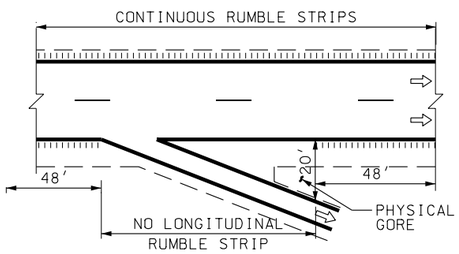

RAMP EXCEPTION DETAIL
ENTRANCE RAMP SIMILAR

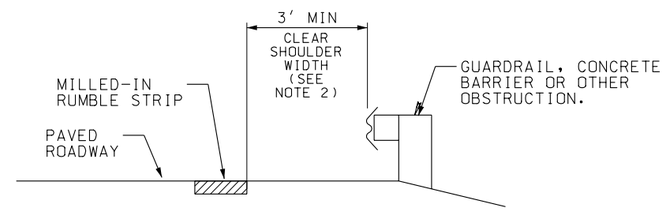

SECTION A-A
ROADSIDE BARRIER EXCEPTION

SEE NOTE 3

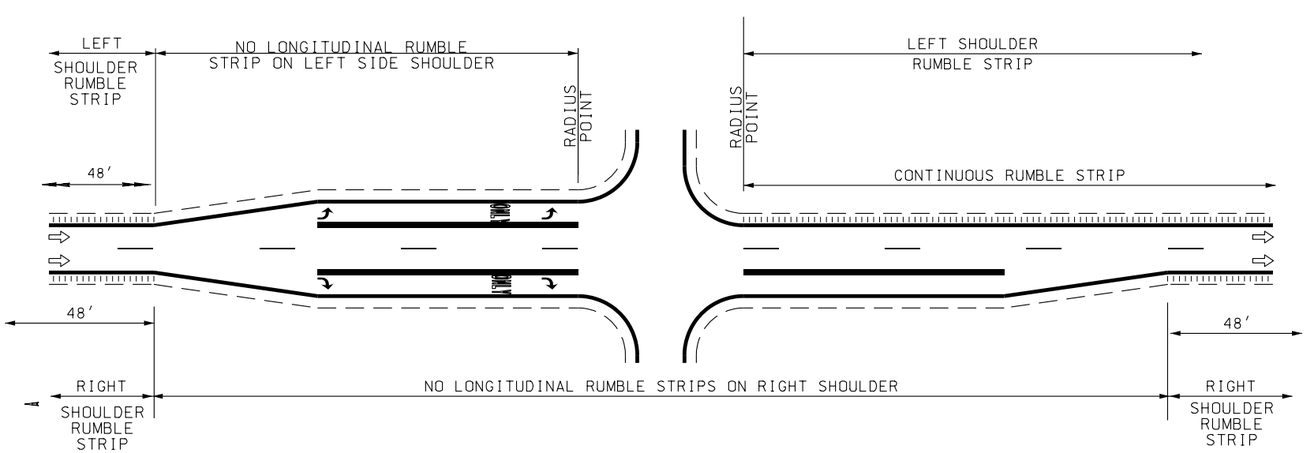

TYPICAL INTERSECTION, TURN LANE &
ACCELERATION LANE EXCEPTION DETAIL

NOTES:

1. OMIT RUMBLE STRIPS ACROSS PRINCIPAL INTERSECTING ROADWAYS AS PER DETAILS.
2. IF BICYCLE TRAFFIC EXISTS OR IS ANTICIPATED THEN PROVIDE A MINIMUM EFFECTIVE CLEAR SHOULDER WIDTH OF 3 FEET. APPLY THIS REQUIREMENT TO BOTH SHOULDERS OF UNDIVIDED HIGHWAYS AND THE RIGHT SHOULDER ONLY ON DIVIDED HIGHWAYS.
3. MAINTAIN 3 FEET MINIMUM CLEAR SHOULDER WIDTH BETWEEN OBSTRUCTION AND INSIDE EDGE OF RUMBLE STRIP, OTHERWISE ELIMINATE RUMBLE STRIP.
4. ON HIGHWAY WITH NO ACCESS CONTROL PLACE RUMBLE STRIP AS PER STD DWG PV 6.

NO.	DATE	APPR.	REMARKS

REVISIONS

UTAH DEPARTMENT OF TRANSPORTATION
STANDARD DRAWINGS FOR ROAD AND BRIDGE CONSTRUCTION
SALT LAKE CITY, UTAH

RECOMMENDED FOR APPROVAL — JULY 03,2002 DATE

CHAIRMAN STANDARDS COMMITTEE APPROVED — JULY 03,2002 DATE

DEPUTY DIRECTOR

STANDARD DRAWING TITLE: RUMBLE STRIPS - TYPICAL APPLICATION

STD DWG
PV 7

DESIGN INFORMATION

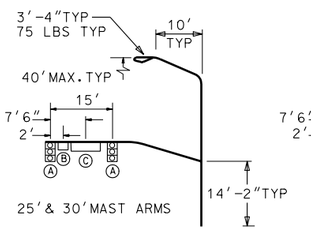

25' & 30' MAST ARMS

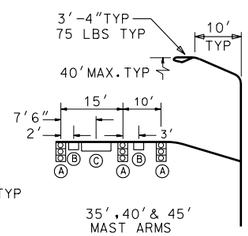

35', 40' & 45' MAST ARMS

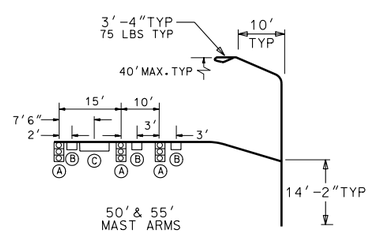

50' & 55' MAST ARMS

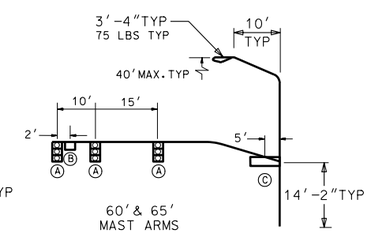

60' & 65' MAST ARMS

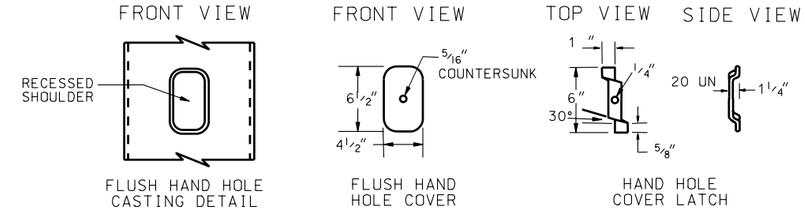

ATTACH LATCH & COVER TOGETHER WITH
1/4" x 2"-20 UN FLAT HEAD BOLT.
END OF BOLT TO BE PEENED.

DEVICE	DESCRIPTION	PROJ.- AREA (FT)2	WEIGHT (LBS)
(A) SIGNAL	1' SECTION WITH 6 " BACK PLATE	10	55
(B) SIGN	REGULATORY 2' X 2' 6"	5	20
(C) SIGN	STREET NAME 1' 4" X 8'	10.64	43

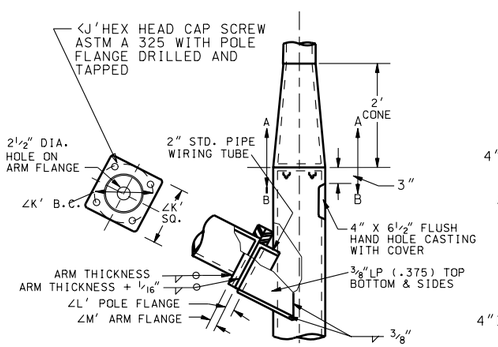

SIGNAL ARM CONNECTION

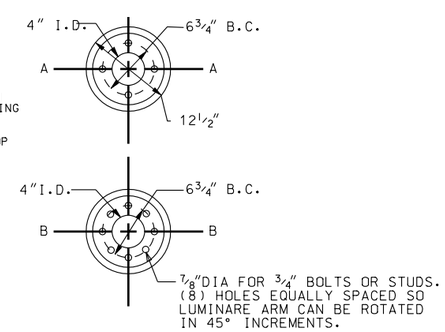

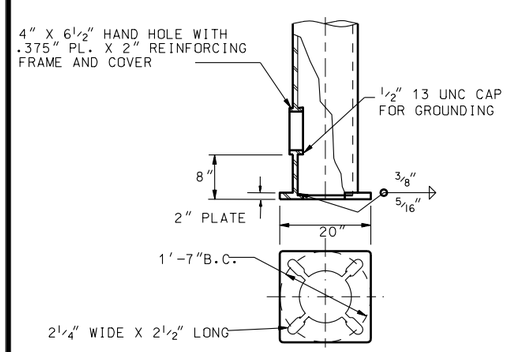

BASE DETAIL

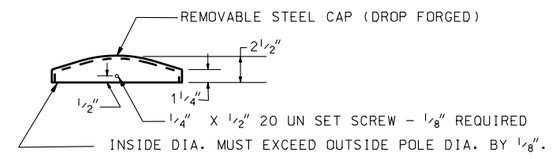

STEEL POLE CAP DETAIL
(REMOVABLE)

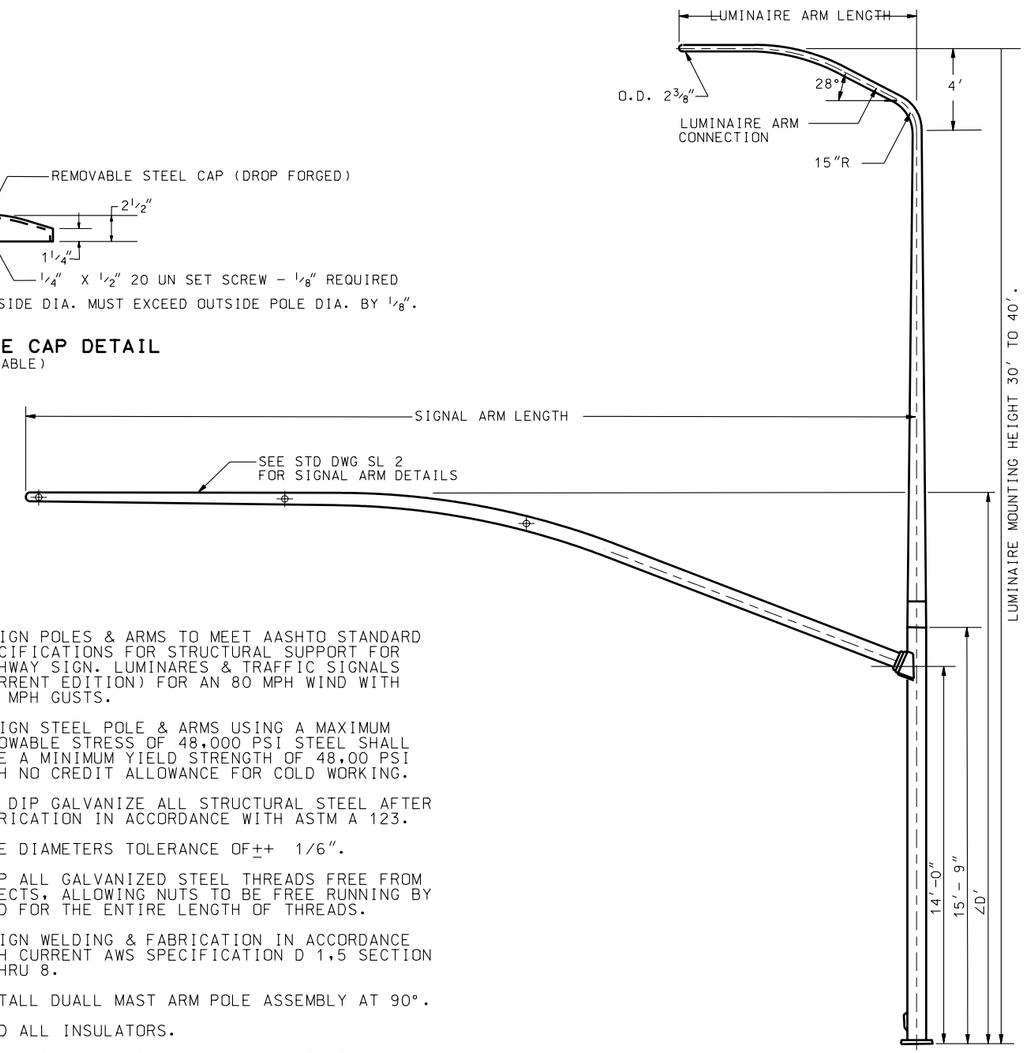

FOR FOUNDATION REQUIREMENTS
SEE STD DWG SL 4

ARM LENGTH	D	J	K	L	M
25' TO 45'	20'- 4"	1 1/4" - 7 NC X 3"	14"	1 1/2"	1 1/4"
50' TO 65'	20'- 10"	1 1/2" - 6 NC X 4"	16"	2"	2"

NOTE:

1. DESIGN POLES & ARMS TO MEET AASHTO STANDARD SPECIFICATIONS FOR STRUCTURAL SUPPORT FOR HIGHWAY SIGN. LUMINARES & TRAFFIC SIGNALS (CURRENT EDITION) FOR AN 80 MPH WIND WITH 104 MPH GUSTS.
2. DESIGN STEEL POLE & ARMS USING A MAXIMUM ALLOWABLE STRESS OF 48,000 PSI STEEL SHALL HAVE A MINIMUM YIELD STRENGTH OF 48,00 PSI WITH NO CREDIT ALLOWANCE FOR COLD WORKING.
3. HOT DIP GALVANIZE ALL STRUCTURAL STEEL AFTER FABRICATION IN ACCORDANCE WITH ASTM A 123.
4. TUBE DIAMETERS TOLERANCE OF±+ 1/6".
5. KEEP ALL GALVANIZED STEEL THREADS FREE FROM DEFECTS, ALLOWING NUTS TO BE FREE RUNNING BY HAND FOR THE ENTIRE LENGTH OF THREADS.
6. DESIGN WELDING & FABRICATION IN ACCORDANCE WITH CURRENT AWS SPECIFICATION D 1,5 SECTION 1 THRU 8.
7. INSTALL DUALL MAST ARM POLE ASSEMBLY AT 90°.
8. BAND ALL INSULATORS.
9. DESIGN POLES & ARMS WITH CIRCULAR CROSS SECTIONS.
10. DIMENSION COUPLING AND TENON AS SHOWN, NO SUBSTITUTIONS ALLOWED.
11. PREPARE SHOP DRAWINGS.
12. ALL SHOWN UNLOADED-NO DEAD OR LIVE LOAD.
13. GRIND FLUSH ALL BUTT OR GROVE WELDS.

REVISIONS

NO.	DATE	APPR.	REMARKS

UTAH DEPARTMENT OF TRANSPORTATION
STANDARD DRAWINGS FOR ROAD AND BRIDGE CONSTRUCTION
SALT LAKE CITY, UTAH

RECOMMENDED FOR APPROVAL — JULY 03,2002 DATE

CHAIRMAN STANDARDS COMMITTEE APPROVED — JULY 03,2002 DATE

DEPUTY DIRECTOR

TRAFFIC SIGNALS
MAST ARM POLE AND
LUMINAIRE EXTENSION

STANDARD DRAWING TITLE

STD DWG
SL 1

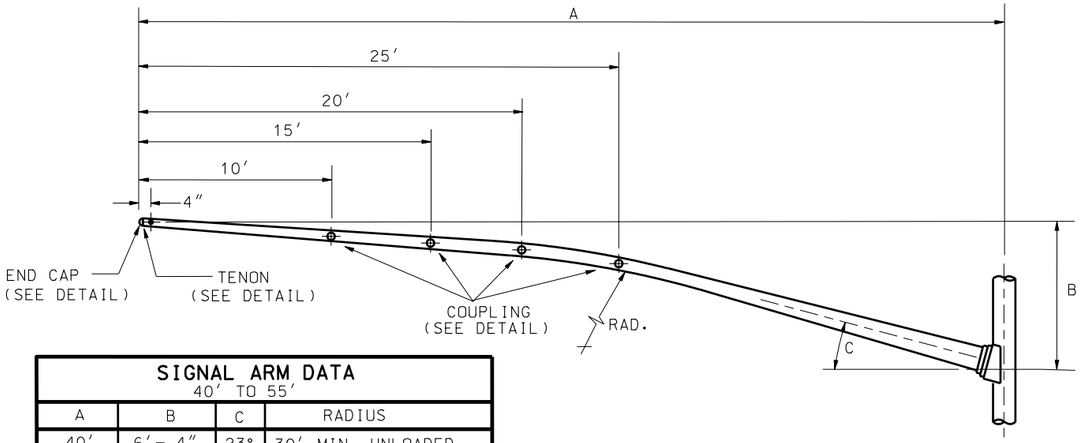

SIGNAL ARM DATA 40′ TO 55′			
A	B	C	RADIUS
40′	6′ – 4″	23°	30′ MIN. UNLOADED
45′	6′ – 4″	23°	30′ MIN. UNLOADED
50′	6′ – 10″	15°	70′ MIN. UNLOADED
55′	6′ – 10″	15°	70′ MIN. UNLOADED

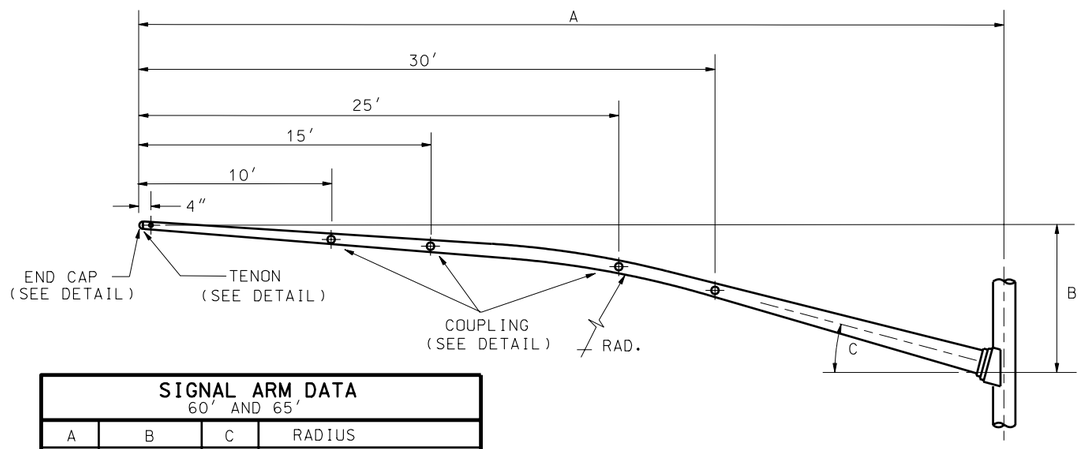

SIGNAL ARM DATA 60′ AND 65′			
A	B	C	RADIUS
60′	6′ – 10″	15°	70′ MIN. UNLOADED
65′	6′ – 10″	15°	70′ MIN. UNLOADED

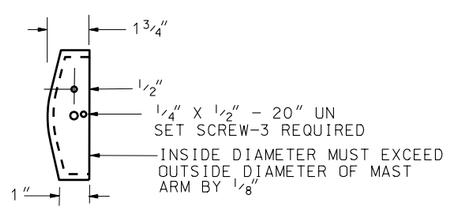

MAST ARM END CAP DETAIL
OR APPROVED EQUAL
(REMOVABLE)

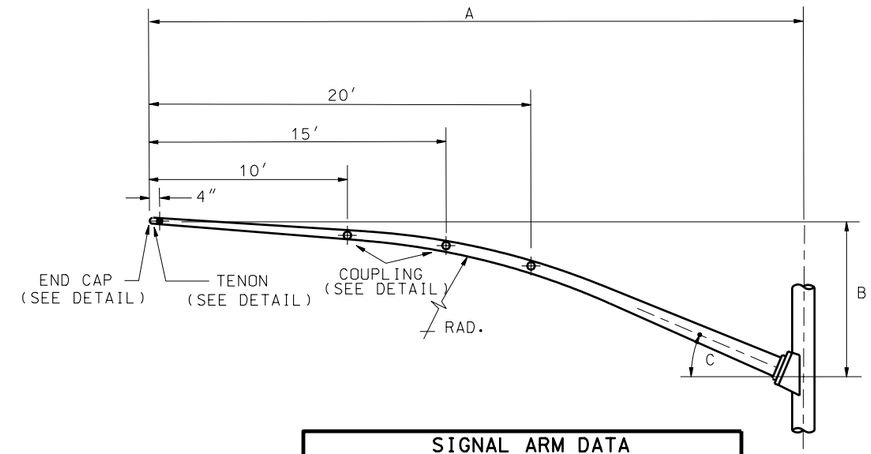

SIGNAL ARM DATA 25′ TO 35′			
A	B	C	RADIUS
25′	6′ – 4″	23°	30′ MIN. UNLOADED
30′	6′ – 4″	23°	30′ MIN. UNLOADED
35′	6′ – 4″	23°	30′ MIN. UNLOADED

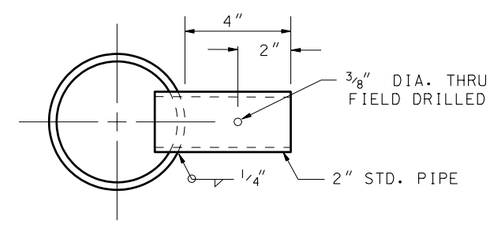

TENON DETAIL

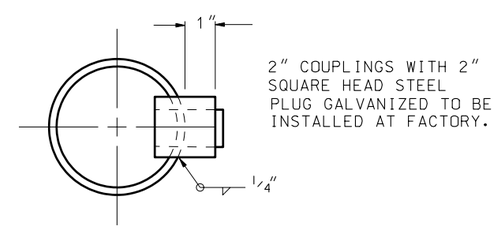

COUPLING DETAIL

REVISIONS

NO.	DATE	APPR.	REMARKS

UTAH DEPARTMENT OF TRANSPORTATION
STANDARD DRAWINGS FOR ROAD AND BRIDGE CONSTRUCTION
SALT LAKE CITY, UTAH

RECOMMENDED FOR APPROVAL — JULY 03,2002 DATE

CHAIRMAN STANDARDS COMMITTEE APPROVED — JULY 03,2002 DATE

DEPUTY DIRECTOR

TRAFFIC SIGNALS
MAST ARM DETAIL
25′ THRU 65′

STANDARD DRAWING TITLE

STD DWG
SL 2

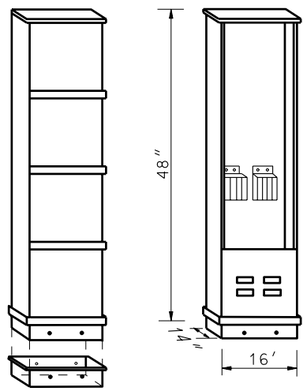

UNDERGROUND SERVICE PEDESTAL

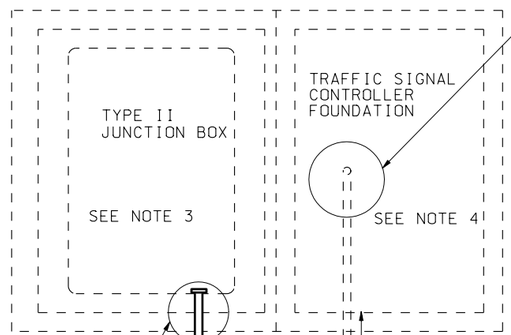

PROCEDURE SHOWN IS FOR SERVICE PEDESTAL AND NEW CONTROLLER FOUNDATION INSTALLATION.

1½" PVC. CONDUIT FOR STREET LIGHTING CRT. (IF CALLED FOR ON "TRAFFIC SIGNAL" DETAILED PLANS)

TYPE I DOUBLE JUNCTION BOX FOR STREET LIGHTING CRT.

POWER CABLES TO STREET LIGHTING

NO. 6 GROUND WIRE

GROUND ROD

36"MIN (NEC.REQ.110-16)

PROCEDURE SHOWN IS FOR SERVICE PEDESTAL ADDITION TO EXISTING SIGNAL CONTROLLER FOUNDATION

⅝" X 8' COPPER COATED STEEL GROUND ROD

4"

4"

TO POWER SOURCE

⅝" X 8' COPPER COATED STEEL GROUND ROD

UNDERGROUND SERVICE PEDESTAL

GROUND WIRE

UNDERGROUND SERVICE PEDESTAL

A- RATED 100 AMP AT 120/240 VOLTS.

B- PROVIDE FOR SIX FULL 1"POLES (INCLUDING MAINS) FOR BOTH METERED AND UN-METERED CIRCUITS BREAKER INTERIORS.

C- USE PLUG-IN CIRCUIT BREAKERS FOR INTERIORS.

D- USE DETACHABLE BASE FOR PRE-INSTALLATION IN CONCRETE FOUNDATION.

E- SECURE PIANO HINGED DOORS WITH MASTER PADLOCK NO.P-848

NOTES:

1. LOCATE SERVICE PEDESTAL ADJACENT TO TYPE II JUNCTION BOX ON EITHER SIDE OR BACK OF CONTROLLER FOUNDATION TO TAKE ADVANTAGE OF FIELD CONDITIONS. ENGINEER WILL DETERMINE EXACT POSITION.
2. INCLUDE METER SOCET WITH TEST BLOCK (SAFETY SOCKET) REQUIRED CIRCUIT BREAKERS. CONCRETE PAD, ALL PVC CONDUIT FOR CONTROLLER POWER,GROUNDING AND GROUNDING ROD, AND NO.8 POWER CABLES FROM SERVICE PEDESTAL TO SIGNAL CONTROLLER POWER INPUT IN THE ITEM FOR "UNDERGROUND SERVICE PEDESTAL".
3. ROUTE THE 1½" CONDUIT WITH THE 120 VOLT,NO.8 POWER CABLES FOR THE CONTROLLER POWER TO THE TYPE II JUNCTION BOX AS SHOWN FOR THE INSTALLATION OF THE UNDERGROUND SERVICE PEDESTAL AT EXISTING CONTROLLER FOUNDATION.
4. INSTALL THE 1½" CONDUIT WITH THE 120 VOLT, NO.8 POWER CABLES FOR THE CONTROLLER POWER THROUGH THE CONTROLLER FOUNDATION DIRECTLY TO THE CONTROLLER CABINET FOR THE INSTALLATION OF THE UNDERGROUND SERVICE PEDESTAL AND NEW CONTROLLER FOUNDATION.

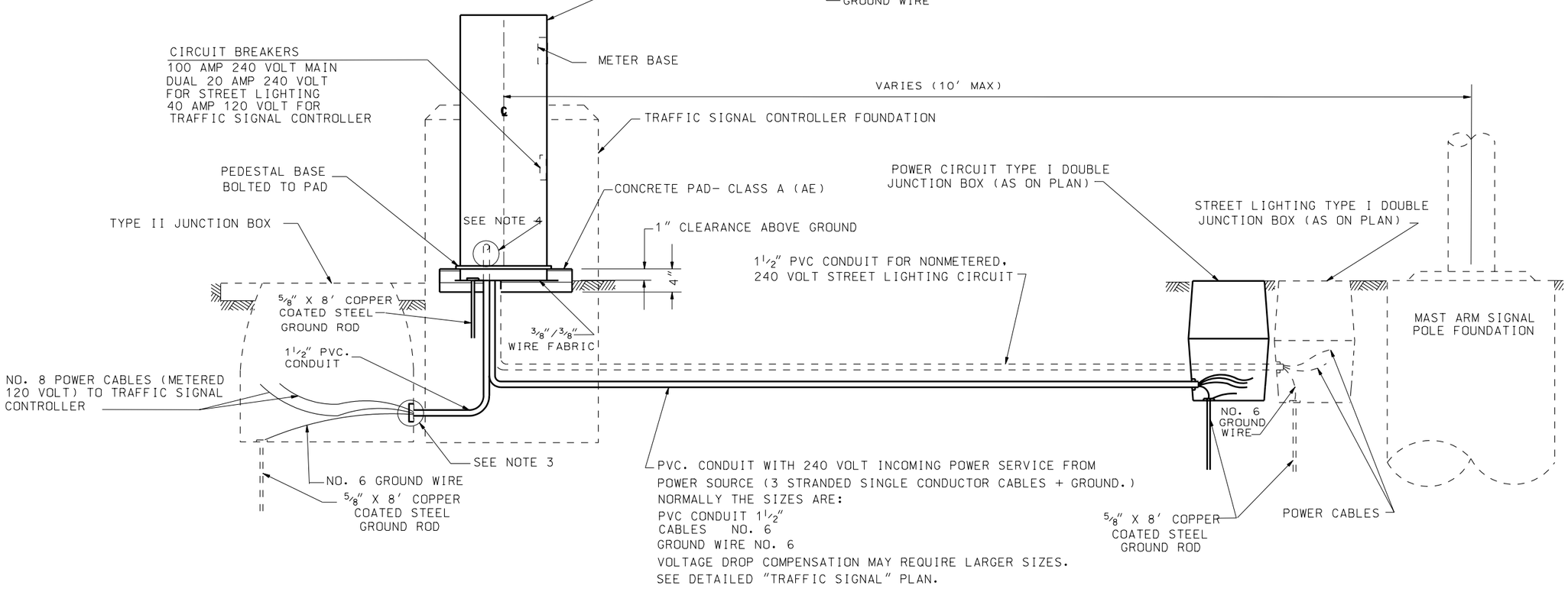

NO.	DATE	APPR.	REMARKS

REVISIONS

UTAH DEPARTMENT OF TRANSPORTATION
STANDARD DRAWINGS FOR ROAD AND BRIDGE CONSTRUCTION
SALT LAKE CITY, UTAH

RECOMMENDED FOR APPROVAL — JULY 03,2002 DATE

CHAIRMAN STANDARDS COMMITTEE APPROVED — JULY 03,2002 DATE

DEPUTY DIRECTOR

UNDERGROUND SERVICE PEDESTAL DETAIL

STANDARD DRAWING TITLE

STD DWG

SL 3

NOTE:

1. PROVIDE A MINIMUM 17′ 6″ CLEARANCE AND MAXIMUM 19′ CLEARANCE FROM TOP OF PAVEMENT TO BOTTOM OF SIGNAL HEAD.
2. CAST ALL FOUNDATIONS IN PLACE AGAINST UNDISTURBED EARTH. WELDING OF REINFORCING STEEL PROHIBITED.
3. USE A CIRCULAR FORM FOR THE TOP 18″ONLY.
4. INSTALL BOLTS SQUARE WITH ROADWAY OR AT ANGLE SHOWN ON PLANS.
5. PLACE ALL CONDUIT IN SAME TRENCH WHERE POSSIBLE.
6. CONSTRUCT SIGNAL POLE FOUNDATION 3′DIA.× 12′ BELOW FINISHED GRADE.
7. USE CONCRETE FOR FOUNDATION CLASS 'A'(AE).
8. CONFORM ANCHOR BOLTS TO MINIMUM REQUIREMENTS OF ASTM A 307. DO NOT WELD ANCHOR BOLT TO THE REINFORCING STEEL. GALVANIZE THE ANCHOR BOLTS IN ACCORDANCE WITH ASTM A 153.
9. CAP CONDUIT ON BOTH ENDS PRIOR TO INSTALLATION.

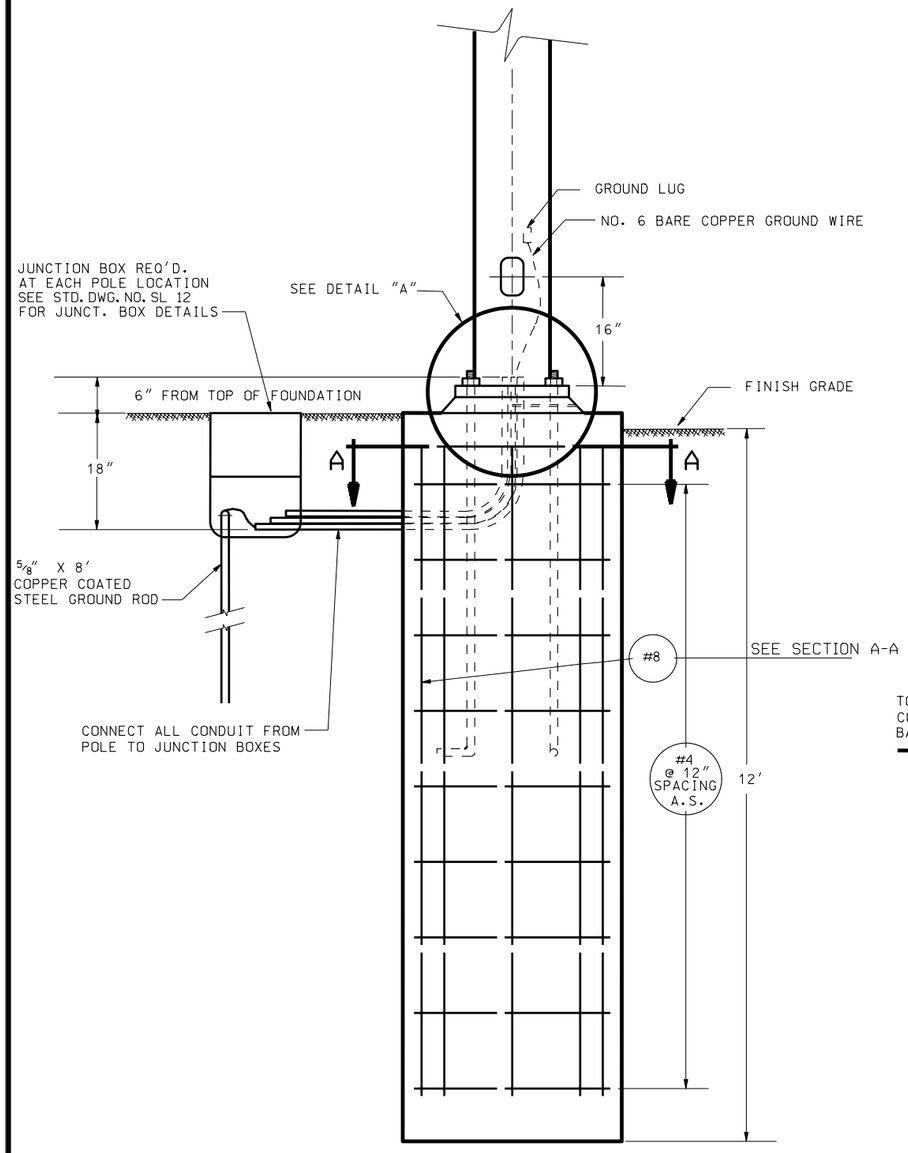

POLE FOUNDATION

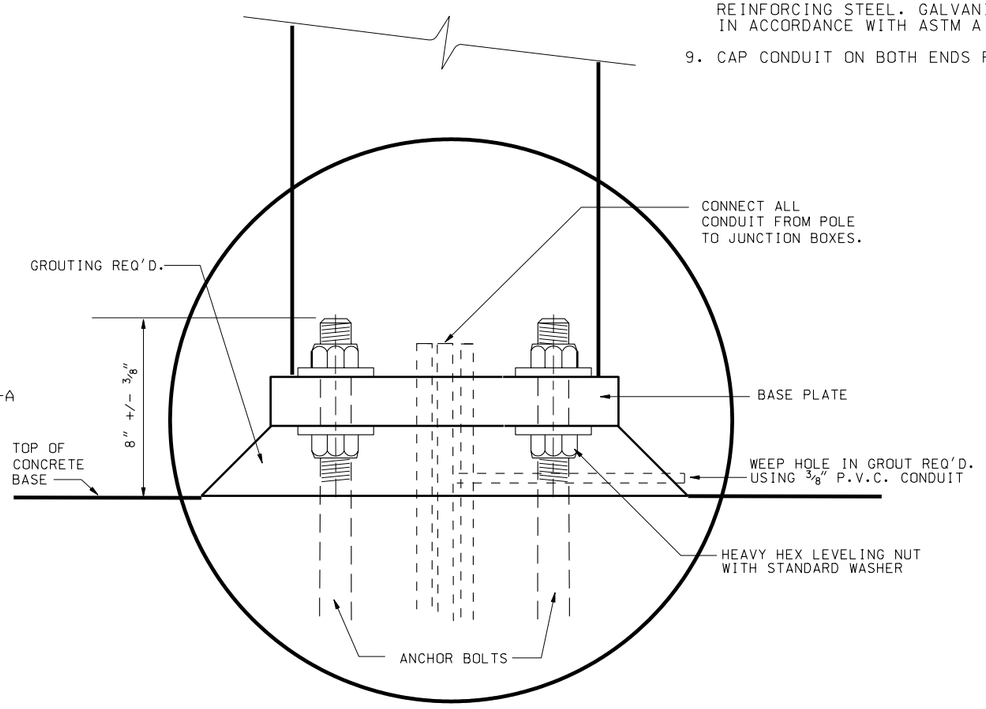

DETAIL "A"

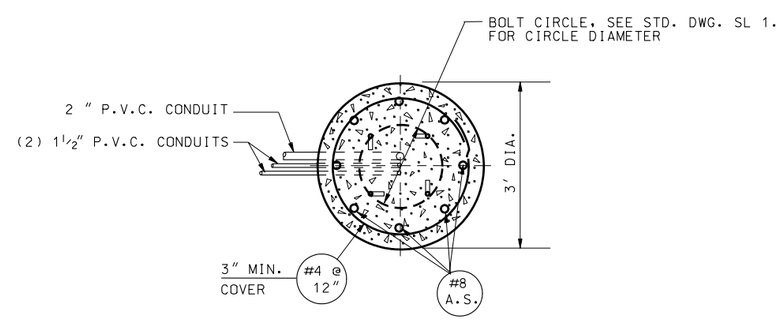

SECTION A-A

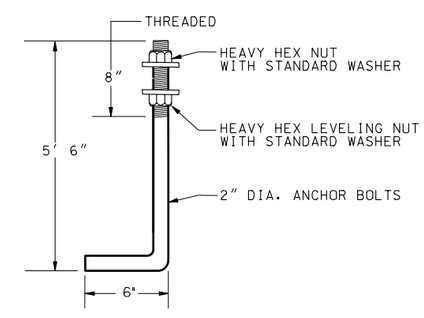

2-INCH ANCHOR BOLT ASSEMBLY
(4 REQUIRED)

NO.	DATE	APPR.	REMARKS

REVISIONS

UTAH DEPARTMENT OF TRANSPORTATION
STANDARD DRAWINGS FOR ROAD AND BRIDGE CONSTRUCTION
SALT LAKE CITY, UTAH

RECOMMENDED FOR APPROVAL — JULY 03,2002 DATE

CHAIRMAN STANDARDS COMMITTEE APPROVED — JULY 03,2002 DATE

DEPUTY DIRECTOR

STANDARD DRAWING TITLE
TRAFFIC SIGNALS
MAST ARM
POLE FOUNDATION

STD DWG
SL 4

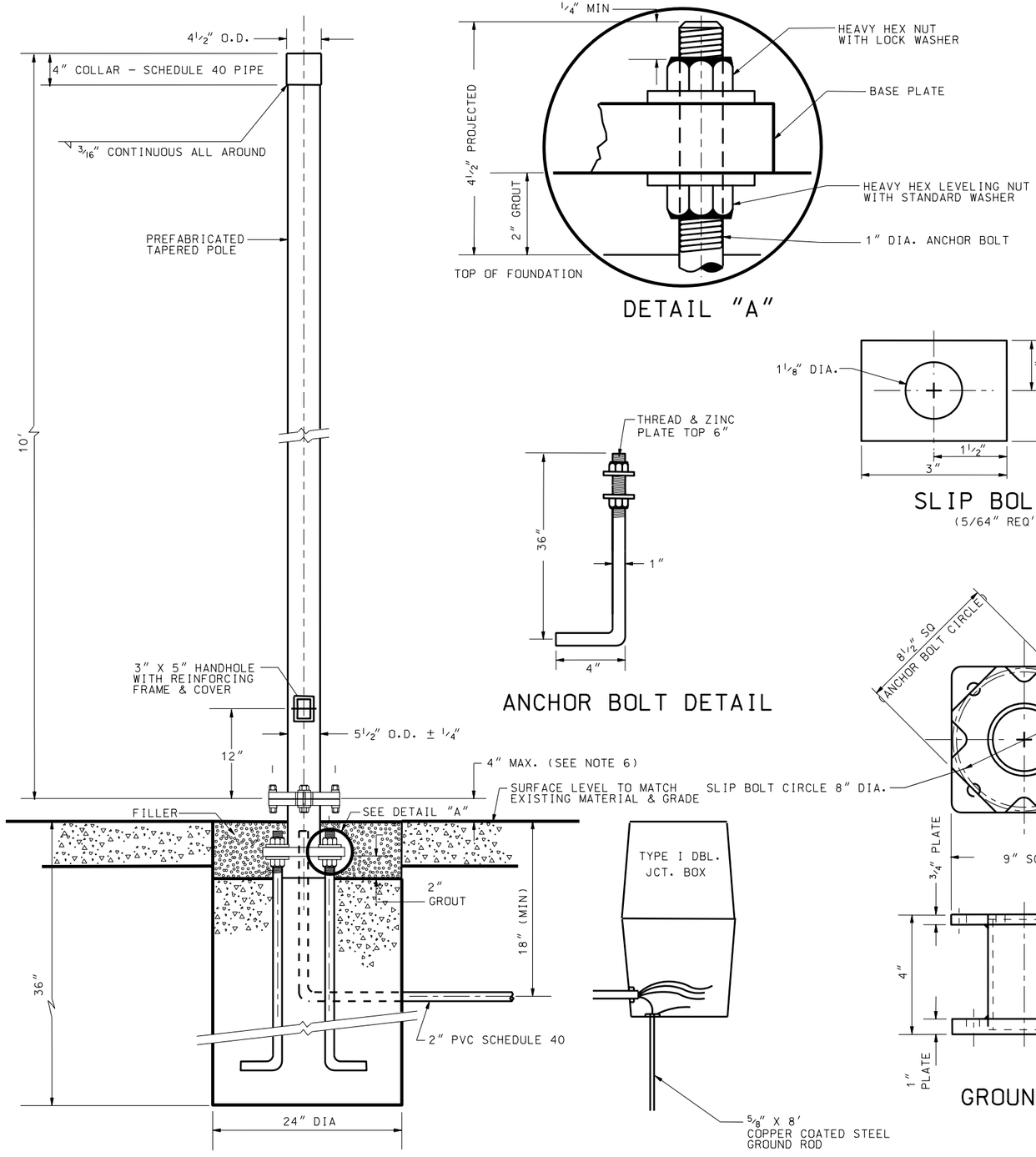

NOTES:

1. MEET SPECIFICATIONS ASTM A 570 GRADE C. GALVANIZED AASHTO M 111 (ASTM A 123) FOR TAPERED POLES. MEET THE REQUIREMENTS OF AASHTO "STANDARD SPECIFICATIONS FOR STRUCTURAL SUPPORTS FOR HIGHWAY SIGNS. LUMINARES WITH 104 MPH GUSTS FOR ALL POLES.
   ALLOWABLE STRESSES:
   ASTM A 570 GRADE C-F_B = 21.78 ksi (.bbFy)
   F_V = 10.89 ksi (@.33 Fy)
   INCREASE 40% FOR GROUP II & GROUP III LOADING.
2. FURNISH ANCHOR BOLTS CONFORMING TO ASTM A 307 EITHER FOOKED AS SHOWN OR WITH A REGULAR SQUARE HEAD & 1/2"x 3"x3" PLATE WASHER TACK WELDED TO BOLT HEAD. ZINC PLATE EXPOSED PORTIONS OF ANCHOR BOLTS IN ACCORDANCE WITH ASTM A 153 NS. DO NOT WELD ANCHOR BOLTS TO REINFORCING STEEL.
3. CAST-IN-PLACE THE FOUNDATION USING CLASS A(AE) CONCRETE.
4. USE SLIP BOLTS THAT ARE 5/8"x 3" ASTM A 325 AND ZINC PLATED. TORQUE EACH SLIP BOLT TO 40 FT/LBS RELEASED & THEN RETORQUE TO 80 FT/LBS.
5. CAP CONDUIT ON BOTH ENDS PRIOR TO POUR.
6. SEE STD DWG SN 6 FOR BREAKAWAY SUPPORT STUB HEIGHT MEASUREMENT.

REVISIONS			
NO.	DATE	APPR.	REMARKS

UTAH DEPARTMENT OF TRANSPORTATION
STANDARD DRAWINGS FOR ROAD AND BRIDGE CONSTRUCTION
SALT LAKE CITY, UTAH

RECOMMENDED FOR APPROVAL — JULY 03,2002 DATE

CHAIRMAN STANDARDS COMMITTEE APPROVED — JULY 03,2002 DATE

DEPUTY DIRECTOR

BREAKAWAY POST MOUNTED TRAFFIC SIGNAL POLE

STANDARD DRAWING TITLE

STD DWG SL 5

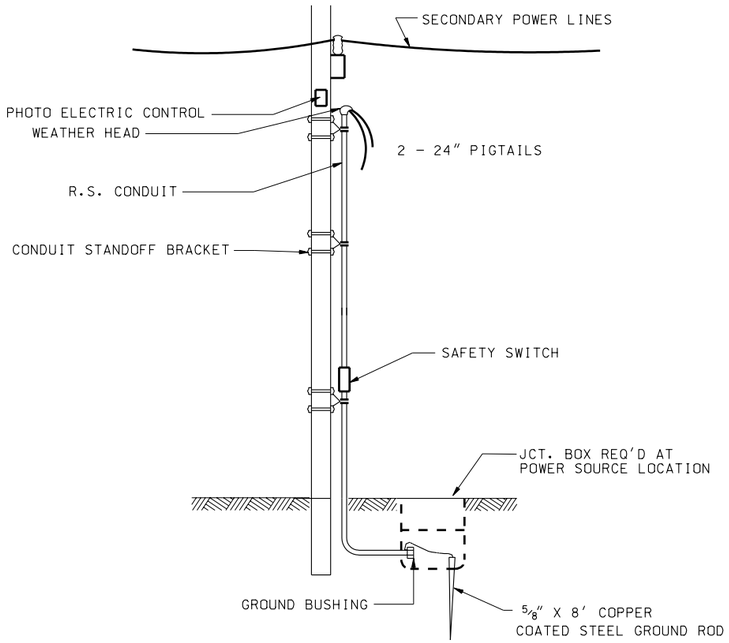

STREET LIGHTING POWER SOURCE

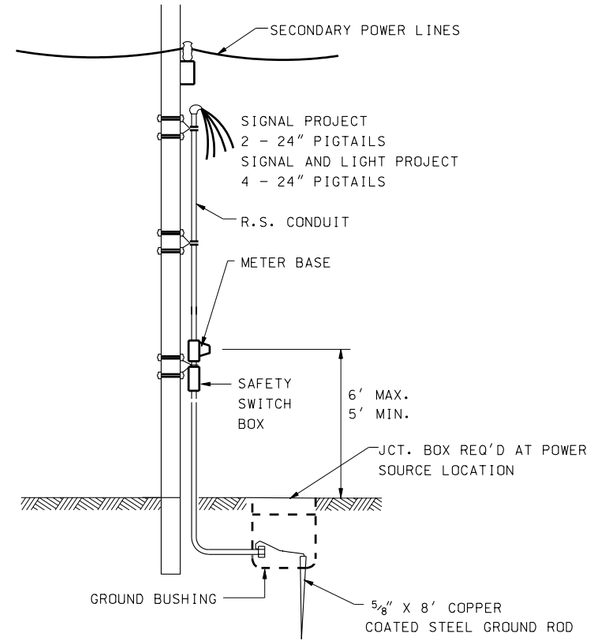

SIGNAL AND LIGHTING POWER SOURCE

NOTES:

1. STREET LIGHTING CIRCUIT REQUIRES DUAL 20 AMP CIRCUIT BREAKER SUITABLE FOR USE ON SERVICE EQUIPMENT.
2. SIGNAL CIRCUIT REQUIRES 40 AMP CIRCUIT BREAKER SUITABLE FOR USE ON SERVICE EQUIPMENT.
3. USE SINGLE CONDUCTOR COPPER CABLE NO.6 AWG TYPE RHH-USE-RHW FOR ALL CONDUCTORS.
4. USE EUSERC APPROVED CLAMP-JAW BY-PASS RELEASE METER SOCKET ON METER BASE. (REQ. ON SIGNAL PROJECTS ONLY)
5. USE A 3-POLE NEMA TYPE 3R AND SUPPLIED WITH A MASTER PADLOCK NO.P-848 ON ALL SAFETY SWITCH BOXES.
6. PLACE ALL CONDUIT IN THE SAME TRENCH WHERE POSSIBLE.
7. FURNISH AND INSTALL AS SHOWN.
8. USE NO.6 BARE COPPER GROUND WIRE.

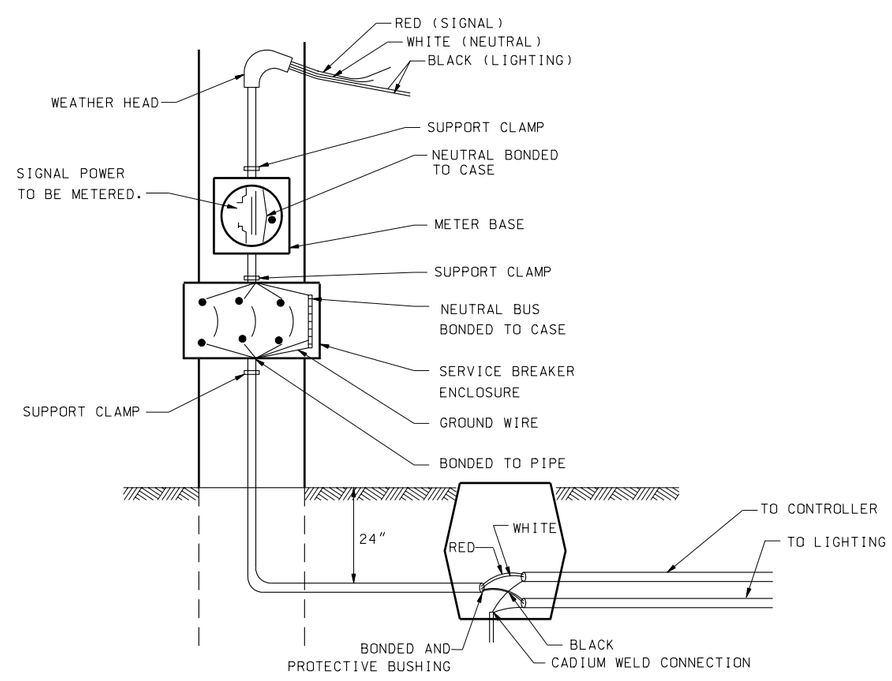

REVISIONS

NO.	DATE	APPR.	REMARKS

UTAH DEPARTMENT OF TRANSPORTATION
STANDARD DRAWINGS FOR ROAD AND BRIDGE CONSTRUCTION
SALT LAKE CITY, UTAH

RECOMMENDED FOR APPROVAL — JULY 03,2002 DATE

CHAIRMAN STANDARDS COMMITTEE APPROVED — JULY 03,2002 DATE

DEPUTY DIRECTOR

STANDARD DRAWING TITLE: POWER SOURCE DETAILS

STD DWG: SL 6

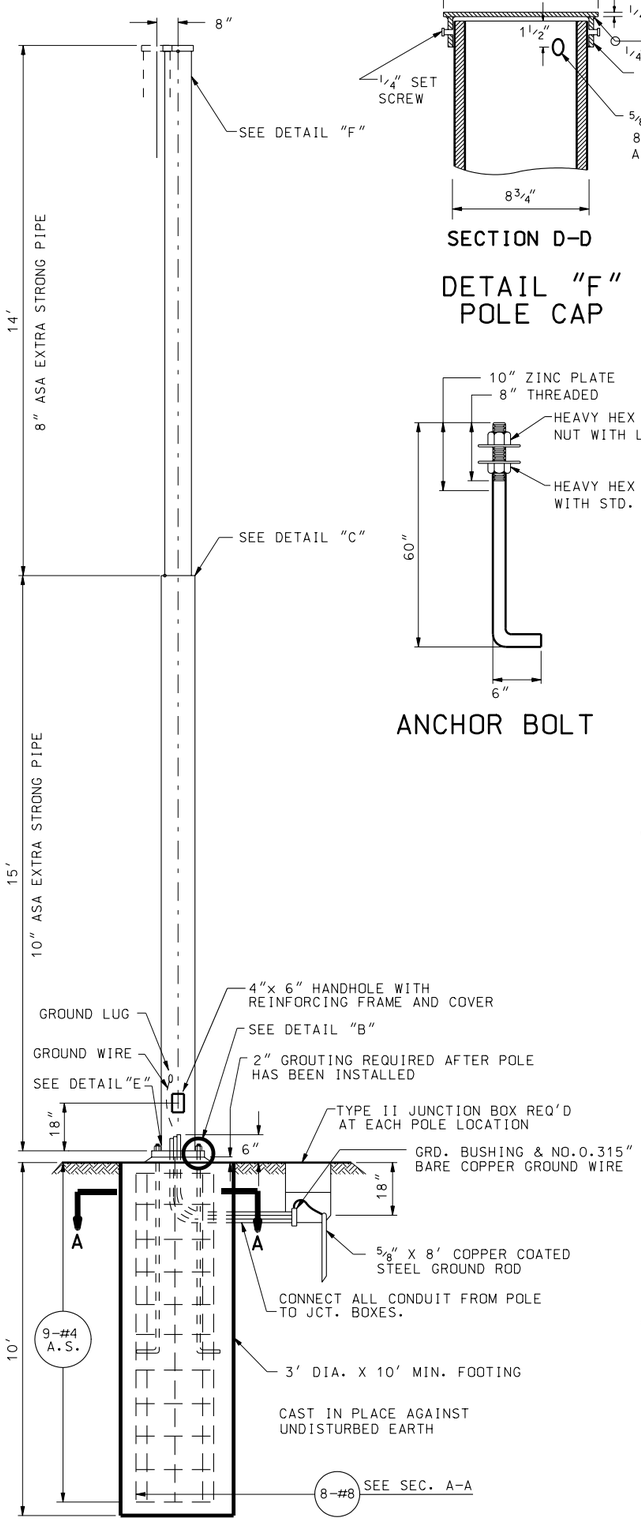

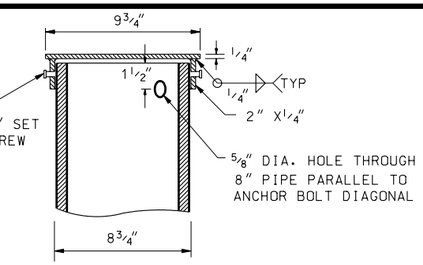

SECTION D-D

DETAIL "F"
POLE CAP

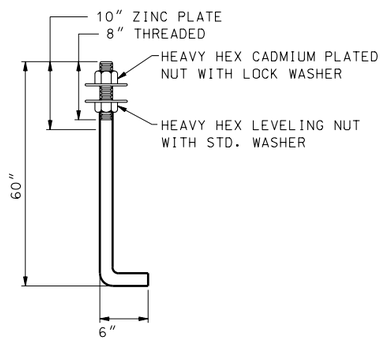

ANCHOR BOLT

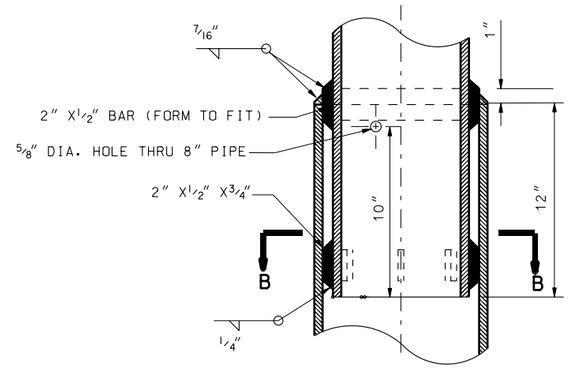

SECTION C-C

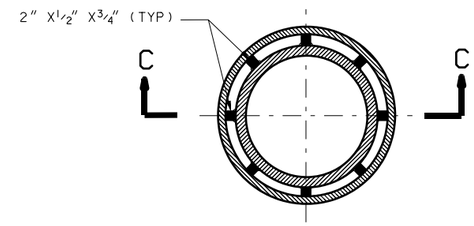

SECTION B-B

DETAIL "C"
POLE SPLICE

NOTES:

1. POLE IS DESIGNED PRIMARILY FOR THE USE OF STEEL MEETING SPECIFICATIONS ASTM A 53, GRADE B. OTHER POLE MATERIALS AND DESIGN ARE ACCEPTABLE SUBJECT TO THE APPROVAL OF DESIGN AND DRAWINGS BY THE ENGINEER PRIOR TO THE OPENING OF BIDS. STRUCTURAL STEEL SUPPORT FOR HIGHWAY SIGNS: CONFORM TO AASHTO STANDARD SPECIFICATION FOR STEEL SUPPORTS. LUMINAIRES AND TRAFFIC SIGNALS CURRENT EDITION FOR AN 80 MPH WIND WITH 104 MPH GUSTS FOR POLES. ALLOWABLE STRESS: ASTM A 53 GRADE B-FB=24,000 P.S.I.(0.66 FY) USE BASIC SIGNAL POLE FOR ALL POLES THROUGHOUT THE PROJECT. RAKE EACH POLE 8" OPPOSITE THE DIRECTION OF EACH SINGLE PULL. FABRICATE THE POLE CAP, BASE PLATE AND SPLICE MATERIALS FROM ASTM A 36 STEEL. HOT DIP GALVANIZED ALL STRUCTURAL STEEL AFTER FABRICATION IN ACCORDANCE WITH ASTM A 123.
2. FURNISH ANCHOR BOLTS CONFORMING TO ASTM A 307 EITHER HOOKED AS SHOWN OR WITH A REGULAR SQUARE HEAD AN 3/4"x 5" x 5" PLATE WASHER. TACK WELDED TO BOLT HEAD.
3. PLACE IN AUGERED FOUNDATION HOLE CLASS A (AE) CONCRETE.
4. FURNISH SHOP DRAWING IN ACCORDANCE WITH "STANDARD SPECIFICATION FOR ROAD AND BRIDGE CONSTRUCTION".
5. PLACE ALL CONDUIT IN SAME TRENCH WHEN AND WHERE POSSIBLE.

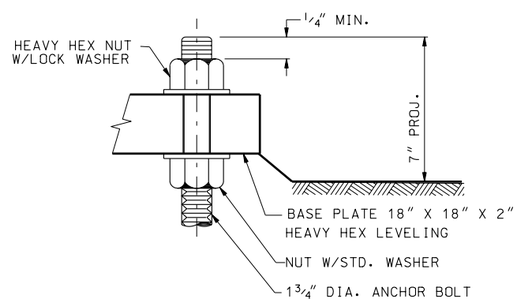

DETAIL "B"

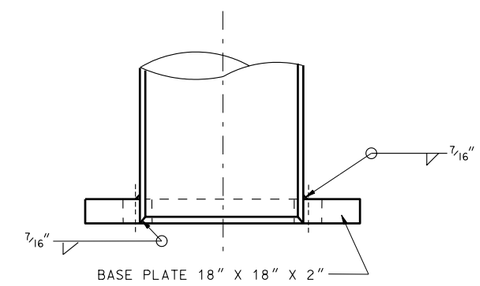

DETAIL "E"
BASE PLATE

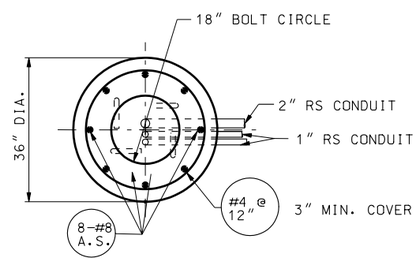

SECTION A-A

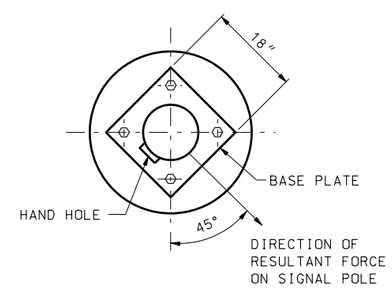

DETAIL "D"
ANCHOR BOLT LOCATION

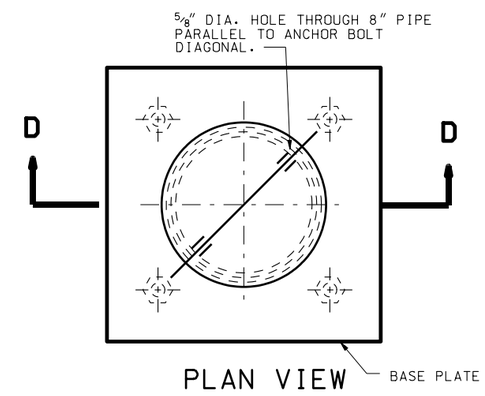

PLAN VIEW

REVISIONS				
NO.	DATE	APPR.	REMARKS	

UTAH DEPARTMENT OF TRANSPORTATION
STANDARD DRAWINGS FOR ROAD AND BRIDGE CONSTRUCTION
SALT LAKE CITY, UTAH

RECOMMENDED FOR APPROVAL — JULY 03,2002 DATE

CHAIRMAN STANDARDS COMMITTEE APPROVED — JULY 03,2002 DATE

DEPUTY DIRECTOR

STANDARD DRAWING TITLE: SPAN WIRE SIGNAL POLE DETAIL

STD DWG
SL 7

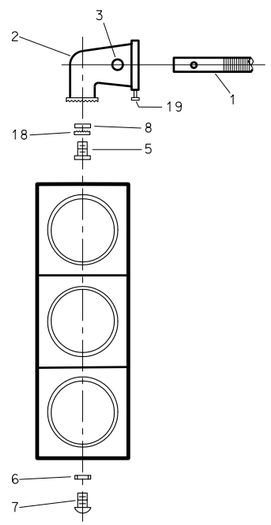

TYPE I

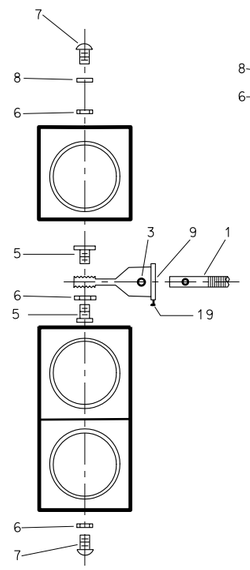

TYPE II

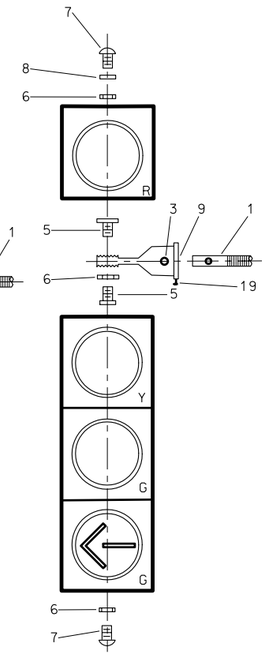

TYPE III

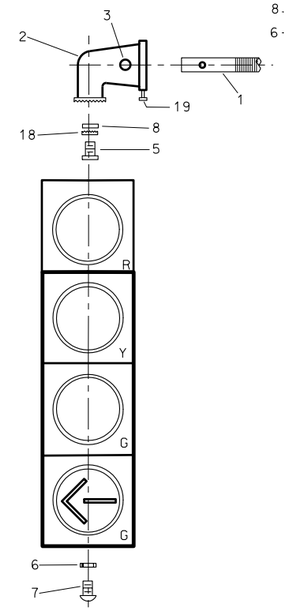

TYPE III-A

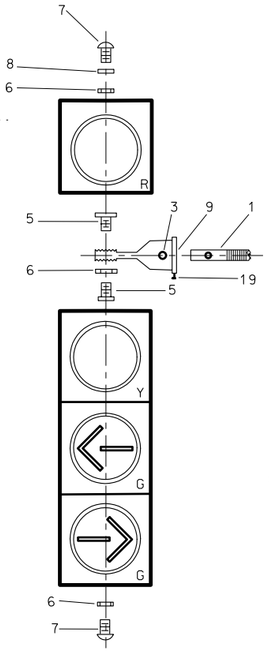

TYPE IV

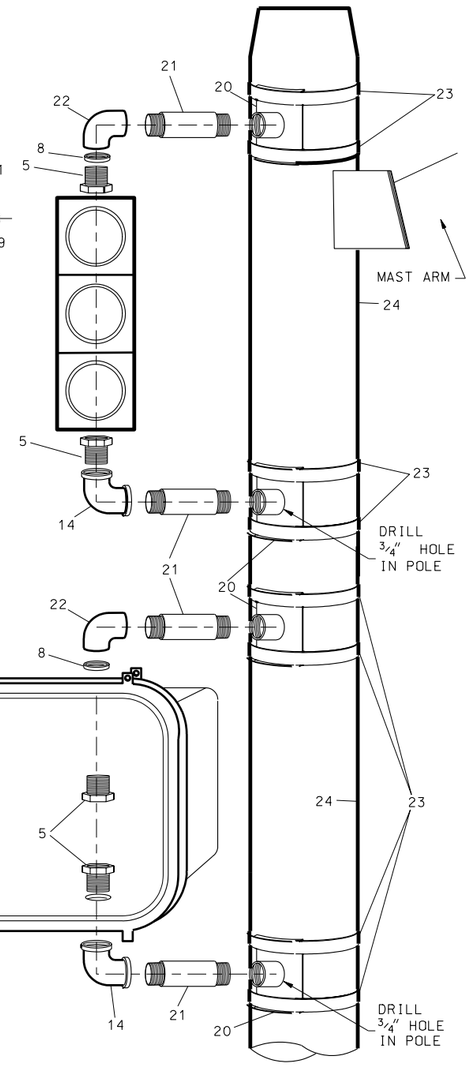

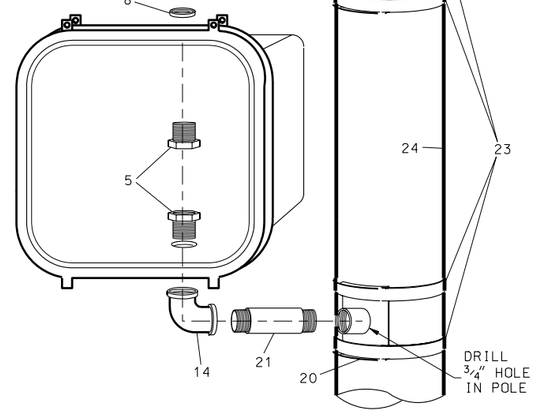

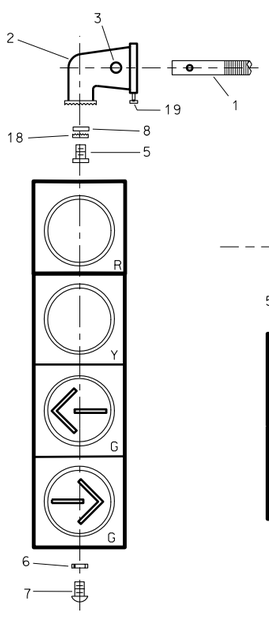

TYPE IV-A

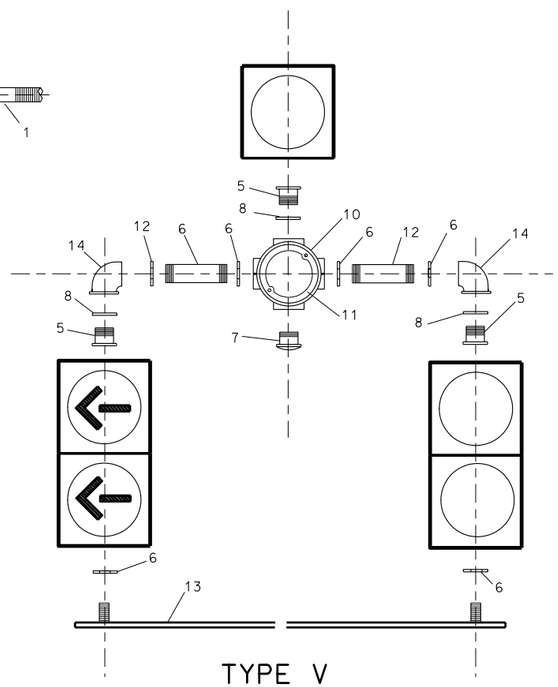

TYPE V

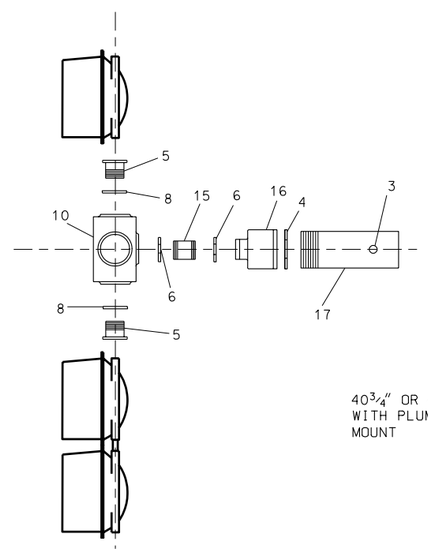

SIDE VIEW

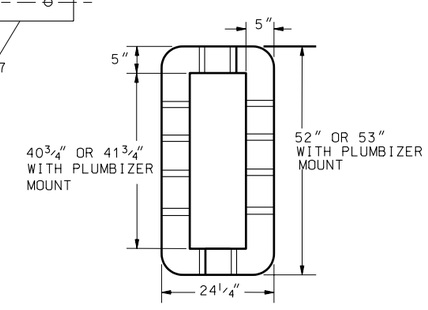

LOUVERED BACKPLATE DETAIL

LEGEND:

1. TENON, 2" GALV. STEEL PIPE THREADE ONE END.
2- MAST ARM PLUMBIZER, 1 1/2"I.D. THREADED WITH 2 1/8" I.D. FOR TENON (BRONZE ONLY).
3- BOLT 5/16"x 4" STAINLESS STEEL OR ZINC PLATED WITH DOUBLE HEX NUTS,TWO STAINLESS STEEL WASHER AND ONE LOCK WASHER.
4- LOCK NUT, 2 1/2".
5- LOCK NIPPLE, 1 1/2"x 1 3/4".
6- LOCK NUT, 1 1/2".
7- ORNAMENTAL CAP, LONG.
8- WASHER, STAINLESS STEEL.
9- ELEVATOR PLUMBIZER, BRONZE.
10- CENTER HUB W/COVER PLATE 4 WAY.
11- CORK GASKET FOR CENTER HUB.
12- GALVANIZED PIPE, 1 1/2"x 5" THREADED BOTH ENDS.
13- TIE BRACE, 2 WAY.
14- ELBOW, 90°, 1 1/2" SERRATED.
15- GALVANIZED PIPE 1 1/2"x 2" THREADED BOTH ENDS.
16- 1 1/2"x 2 1/2" REDUCER.
17- GALVANIZED PIPE 2 1/2"x 6" THREADED ONE END.
18- WASHER, SHAKEPROOF, ZINC PLATED.
19- SET SCREWS, 3 REQUIRED.
20- ROUND POLE PLATE.
21- GALVANIZED PIPE 1 1/2"x 12" THREADED BOTH ENDS.
22- 1 1/2" PLAIN ELBOW.
23- 3/4" STAINLESS STEEL BAND 2 WRAPS WRAPS.
24- POLE SHAFT.

NOTES:

A. USE VISORS FOR TRAFFIC SIGNALS THAT ARE TUNNEL TYPE 12"x 12" AND YELLOW IN COLOR.

B. SHOP DRAWINGS ARE REQUIRE IN ACCORDANCE WITH SUBSECTION 1-4-C OF THE STATE OF UTAH "SPECIFICATIONS FOR ROAD & BRIDGE CONSTRUCTION" 2000 EDITION.

C. ALL FITTING TO BE BRONZE EXCEPT GALVANIZED STEEL PIPE FITTINGS.

D. LOCATE TERMINAL BLOCK IN TOP SECTION.

E. INSTALL TYPE V SIGNAL ASSEMBLIES SO THAT HINGED SIGNAL FACES SWING OPEN TO THE OUTSIDE.

F. ORIENT ALL LENSES FOR TOP UPWARD ALIGMENT.

REVISIONS

NO.	DATE	APPR.	REMARKS

UTAH DEPARTMENT OF TRANSPORTATION
STANDARD DRAWINGS FOR ROAD AND BRIDGE CONSTRUCTION
SALT LAKE CITY, UTAH

RECOMMENDED FOR APPROVAL — JULY 03,2002 DATE

CHAIRMAN STANDARDS COMMITTEE APPROVED — JULY 03,2002 DATE

DEPUTY DIRECTOR

STANDARD DRAWING TITLE: SIGNAL HEAD DETAILS

STD DWG
SL 8

TOP

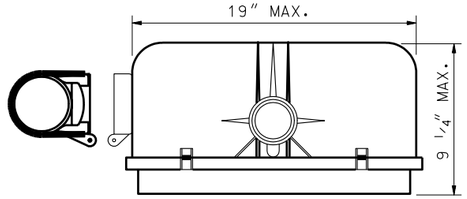

CLAMSHELL MOUNTING

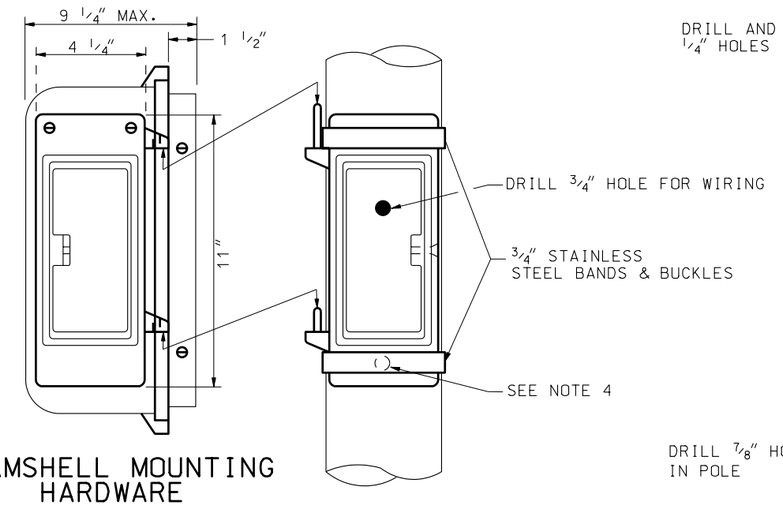

CLAMSHELL MOUNTING HARDWARE

OPEN VIEW

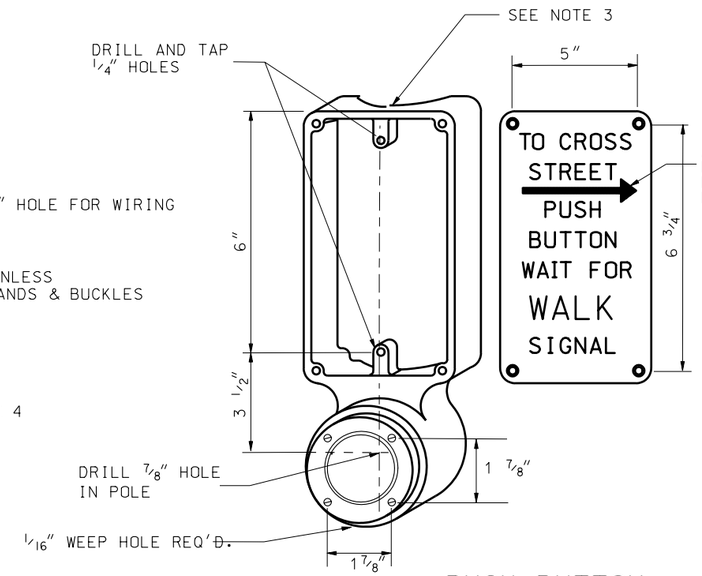

PIPE MOUNTING

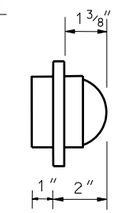

PUSH BUTTON ASSEMBLY

FRONT

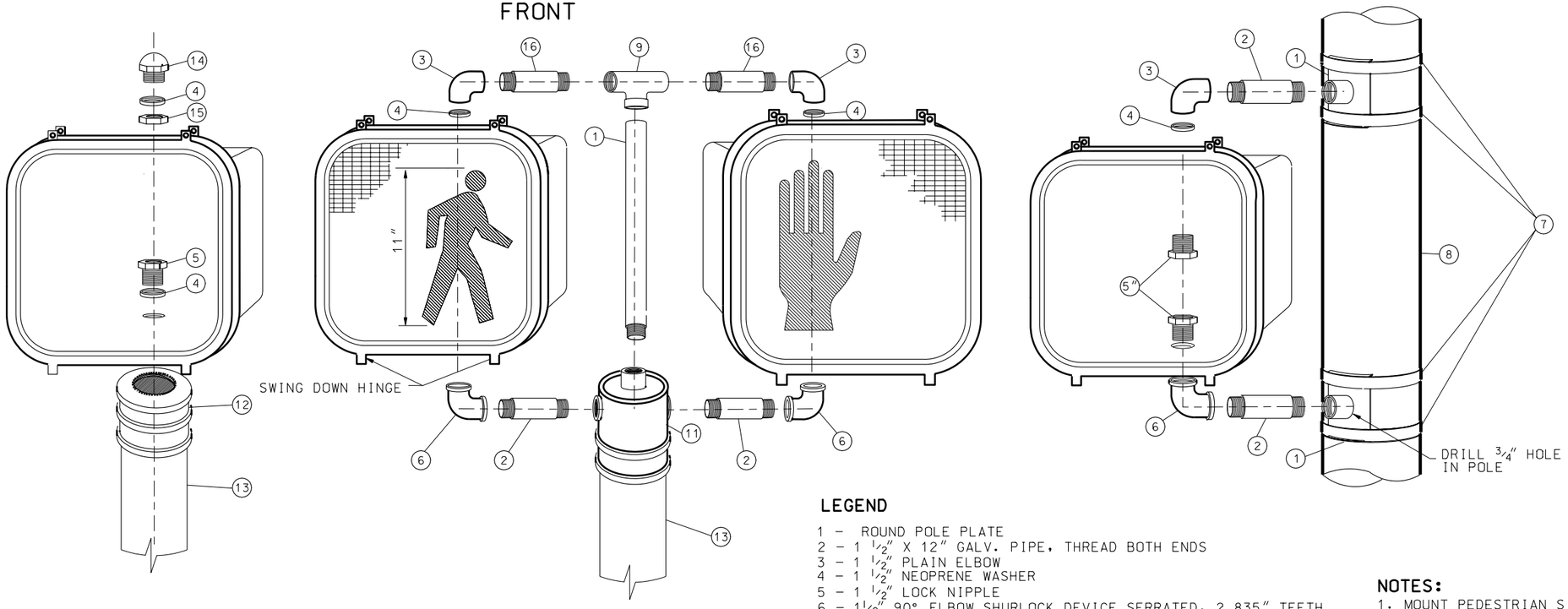

LEGEND

1 - ROUND POLE PLATE
2 - 1 1/2" X 12" GALV. PIPE, THREAD BOTH ENDS
3 - 1 1/2" PLAIN ELBOW
4 - 1 1/2" NEOPRENE WASHER
5 - 1 1/2" LOCK NIPPLE
6 - 1 1/2" 90° ELBOW SHURLOCK DEVICE SERRATED, 2.835" TEETH
7 - 3/4" STAINLESS STEEL BAND, 2 WRAPS
8 - POLE SHAFT (MASK ARM)
9 - 1 1/2" TEE WITH SET SCREW
10 - 1 1/2" GALV. PIPE, THREAD ONE END ONLY
11 - 4 1/2" INSIDE DIA. POLE TOP MOUNTED TERMINAL COLLAR
12 - 4 1/2" INSIDE DIA. ADAPTER WITH SERRATED PORTS
13 - 4" GALV. PIPE SHAFT
14 - 1 1/2" ORNAMENTAL CAP
15 - 1 1/2" LOCK NUT
16 - 1 1/2" GALV. PIPE, THREAD BOTH ENDS, CUT TO SIZE

NOTES:

1. MOUNT PEDESTRIAN SIGNALS 9' 3" ± 6" TO BOTTOM OF HOUSING.
2. MOUNT PUSH BUTTONS 42"TO 48" ABOVE GROUND OR SIDEWALK SURFACE.
3. RADIUS TO MATCH POLE OR BE ADJUSTABLE.
4. DRILL 1/2" MOUNTING HOLE AND ATTACH TO POLE WITH 1/2" BOLT (REQUIRED ON NON-TAPERED POLES ONLY).

NO.	DATE	APPR.	REMARKS

REVISIONS

UTAH DEPARTMENT OF TRANSPORTATION
STANDARD DRAWINGS FOR ROAD AND BRIDGE CONSTRUCTION
SALT LAKE CITY, UTAH

RECOMMENDED FOR APPROVAL — JULY 03,2002 DATE

CHAIRMAN STANDARDS COMMITTEE APPROVED — JULY 03,2002 DATE

DEPUTY DIRECTOR

PEDESTRIAN SIGNAL ASSEMBLY

STANDARD DRAWING TITLE

STD DWG
SL 9

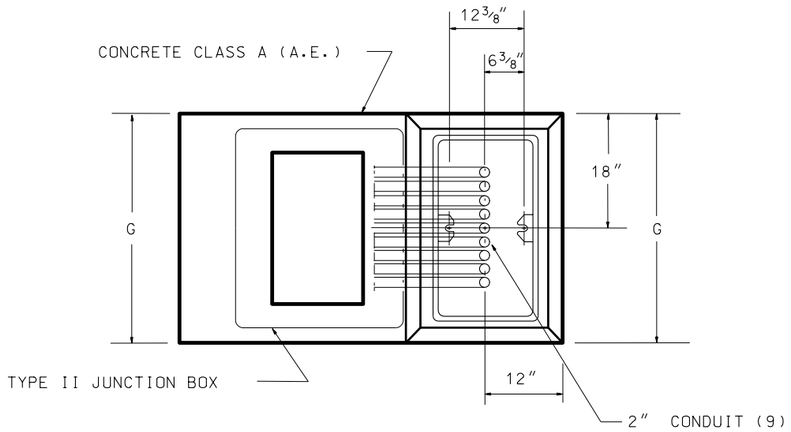

TYPE 5 CABINET BASE

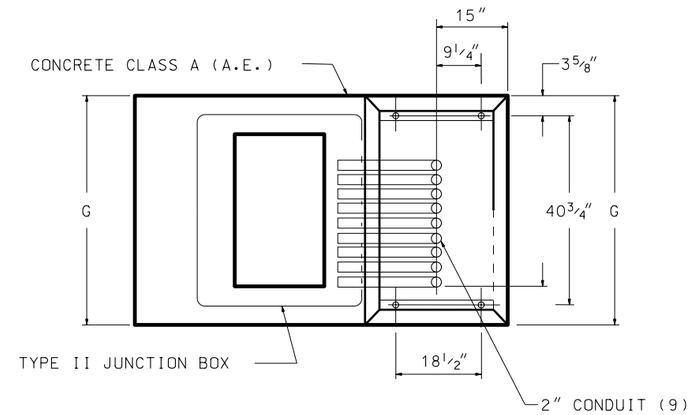

TYPE 6 CABINET BASE

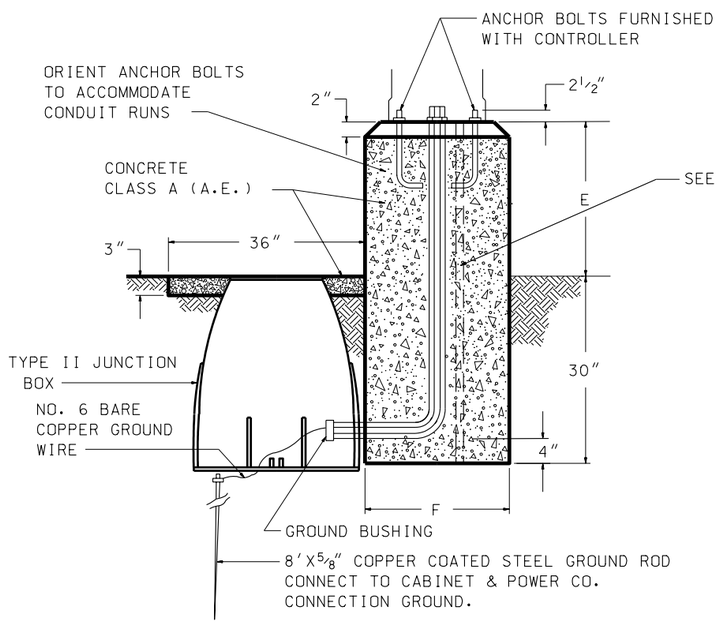

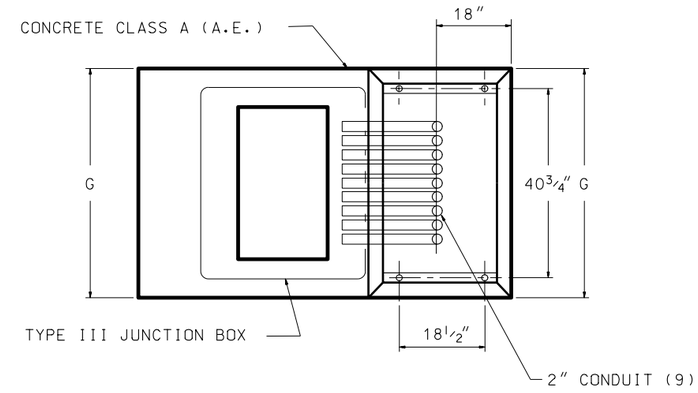

ATMS CABINET BASE

NOTE: THE ABOVE PROFILE DRAWING IS TYPICAL OF THE TYPE 5, TYPE 6 AND ATMS CABINET BASE.

CABINET	E	F	G
TYPE 5	22"	24"	36"
TYPE 6	22"	30"	48"
ATMS	22"	36"	36"

NOTES:

1. ATTACH THE GROUNDED SIDE OF THE POWER SUPPLY TO THE CONTROL CABINET GROUND TERMINAL.
2. INSTALL ALL WIRING IN A NEAT AND FIRM MANNER.
3. MAINTAIN A 1"MIN SPACING BETWEEN CONDUITS IN A CABINET BASE. CAP CONDUITS AT BOTH ENDS UNTIL USED.
4. IDENTIFY AND LABEL ALL FIELD TERMINALS.
5. GROUND CABINET WITH A 10' x 3/4" COPPER COATED STEEL GROUND ROD PLACED IN A 1 1/2" PVC CONDUIT FOUNDATION SLEEVE.
6. PLACE ALL CONDUIT IN THE SAME TRENCH WHERE POSSIBLE.

REVISIONS

NO.	DATE	APPR.	REMARKS

UTAH DEPARTMENT OF TRANSPORTATION
STANDARD DRAWINGS FOR ROAD AND BRIDGE CONSTRUCTION
SALT LAKE CITY, UTAH

RECOMMENDED FOR APPROVAL — JULY 03,2002 DATE

CHAIRMAN STANDARDS COMMITTEE APPROVED — JULY 03,2002 DATE

DEPUTY DIRECTOR

CONTROLLER BASE DETAIL

STANDARD DRAWING TITLE

STD DWG
SL 10

SAW CUT DETAIL
(CONCRETE)

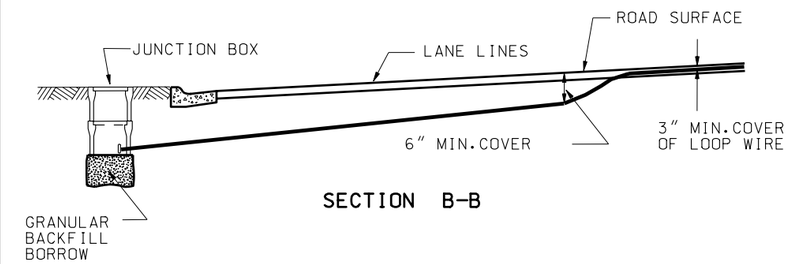

SECTION B-B

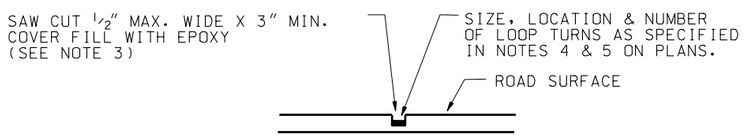

SECTION C-C

P.V.C DETAIL
(ASPHALT)

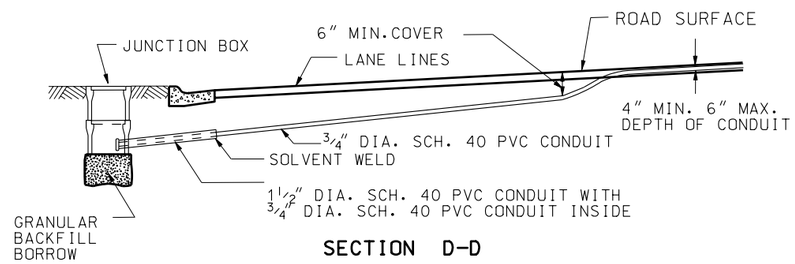

SECTION D-D

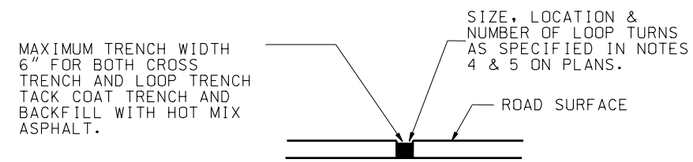

SECTION E-E

NOTES:

1. REPLACE TRENCHING MATERIAL REMOVED FOR DETECTOR CIRCUIT INSTALLATION WITH SPECIFIED MATERIAL WITHIN 8 HOURS.
2. INSTALL ALL CONDUITS IN SAME TRENCH WHERE POSSIBLE.
3. INSTALL ALL CONDUCTORS IN SAW CUT PLACE CABLE OR WIRE AT BOTTOM OF DRY SLOT. USE EPOXY SEAL WHICH DOES NOT CONTAIN ACETONE SOLVENT TO CLOSE SAW CUT.
4. USE 4 TURNS OF SINGLE CONDUCTOR #14 CABLE ON ALL LOOPS 6' X 12' AND SMALLER. USE 3 TURNS OF #14 CABLE ON ALL LOOPS 6' X 14' AND LARGER.
5. SEE PLAN SHEETS FOR DETECTOR LOOP LOCATION. STATION AND OFFSET GIVEN FOR THE CENTER OF LOOP.
6. USE A SEPARATE WIRE FOR EACH LOOP HOME RUN. USE CONTINUOUS WIRE FOR EACH LOOP. DO NOT USE SPLICES EXCEPT AT THE JUNCTION BOX WHERE THE LEAD-IN WIRE CONNECTS TO THE HOME RUN. DO NOT SPLICE THE LOOP CABLE, LEAD-IN CABLE, OR THE HOME RUN CABLES. TAG AND NUMBER EACH LOOP WIRE IN CONFORMANCE WITH THE DESIGN. PLACE LOOP DETECTOR WIRE COUNTER CLOCKWISE.
7. USE ONE TWIST PER FOOT IN SAW CUTS AND THREE TWISTS PER FOOT IN CONDUIT FOR LOOP DETECTOR IN TRENCH "A".
8. USE DETAIL AS INDICATED ON PLANS.
9. INSPECT AND TEST ALL LOOPS. RESISTANCE TO GROUND MUST BE GREATER THAN 200 MILLION OHMS AT 6000 VOLTS DO NOT EXCEED 0.8 OHMS SERIES RESISTANCE.

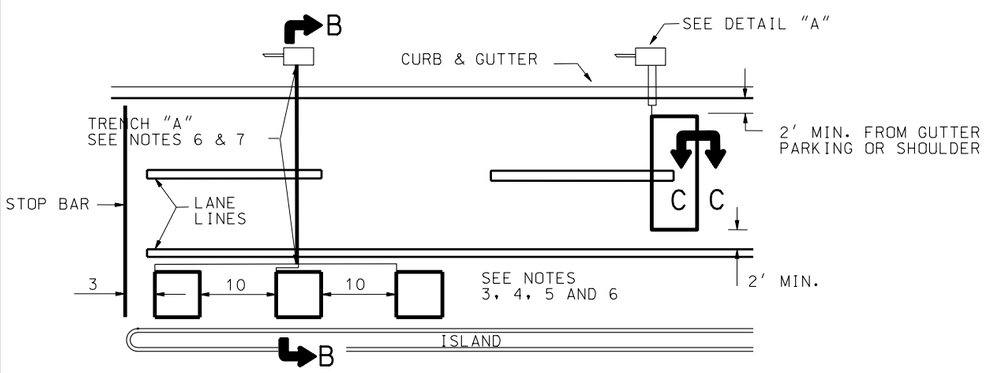

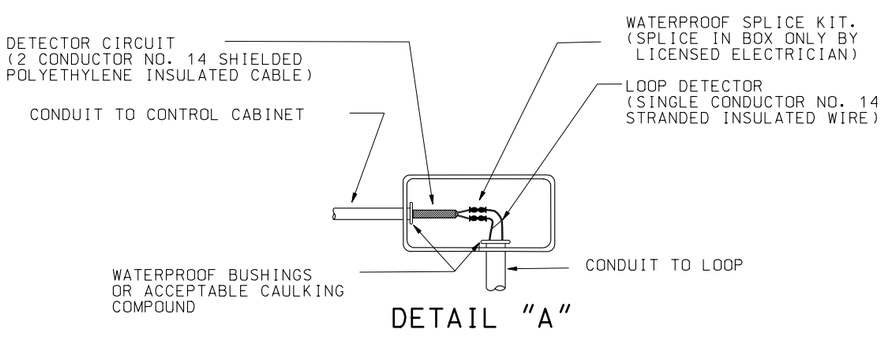

DETAIL "A"

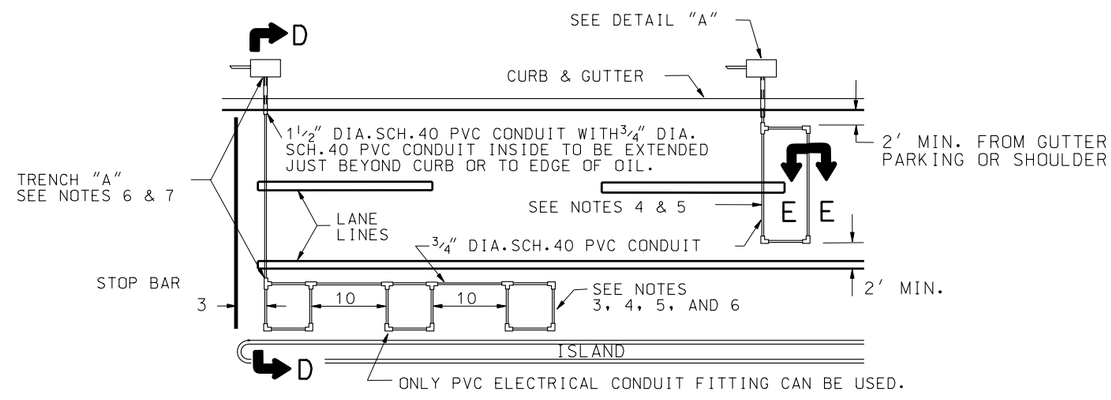

NO.	DATE	APPR.	REMARKS

REVISIONS

UTAH DEPARTMENT OF TRANSPORTATION
STANDARD DRAWINGS FOR ROAD AND BRIDGE CONSTRUCTION
SALT LAKE CITY, UTAH

RECOMMENDED FOR APPROVAL — JULY 03,2002 DATE

CHAIRMAN STANDARDS COMMITTEE APPROVED — JULY 03,2002 DATE

DEPUTY DIRECTOR

TRAFFIC SIGNALS
LOOP DETECTOR
DETAIL

STANDARD DRAWING TITLE

STD DWG
SL 11

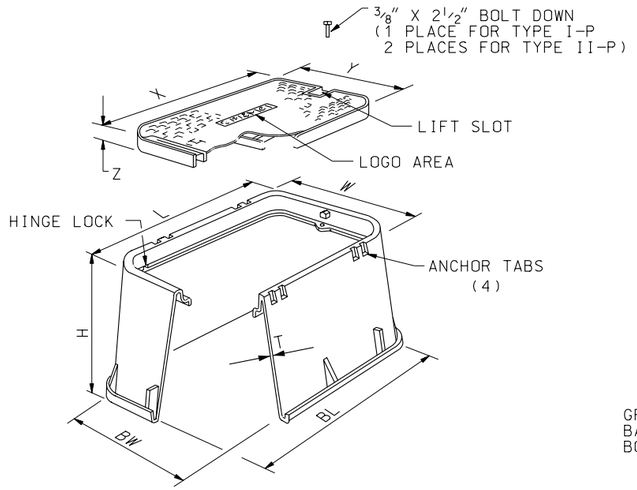

PLASTIC JUNCTION BOX

BOX AND LID DIMENSIONS

(INCHES)

BOX TYPE	L	W	H	BL	BW	T	X	Y	Z
I-P	17	11 3/4	12	19 1/4	14	1/4	15 3/8	10 1/8	1 3/4
II-P	25 1/4	16	15	29 3/4	20	1/4	23 1/4	13 3/4	2

NOTES: ALL DIMENSIONS LISTED ARE MINIMUM.

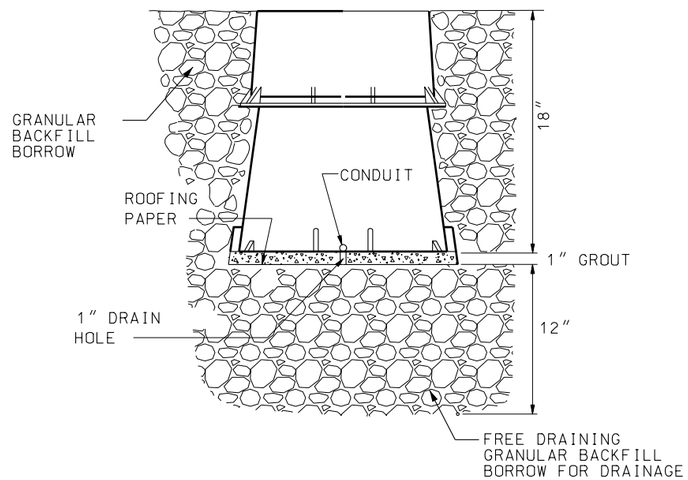

JUNCTION BOX AND EXTENSION TYPE I-P

NOTES:

1. PROVIDE SEALING COMPOUND ON ENDS OF EACH CONDUIT RUN.
2. OTHER JUNCTION BOXES ACCEPTABLE SUBJECT TO APPROVAL BY THE ENGINEER.
3. USE GRANULAR BACKFILL WELL TAMPED AROUND JUNCTION BOXES.
4. CAST CONDUIT HOLES IN JUNCTION BOX AT THE TIME OF PRECASTING OR DRILL AT THE TIME OF PLACEMENT WITH NO STRUCTURAL DAMAGE TO BOX. DIAMETER OF ALL DRILLED HOLES THE SAME AS OUTSIDE DIAMETER OF CONDUIT.
5. PLACE TOP OF THE JUNCTION BOX WITH SURROUNDING GRADE OR CONCRETE FLATWORK EXCEPT AS DIRECTED WHEN AREA IS SUBJECT TO WHEEL LOAD. IF WHEEL LOAD IS ANTICIPATED. COVER THE JUNCTION BOX WITH A STEEL PLATE OVERLAPPING THE JUNCTION BOX BY A MINIMUM OF 1 1/2" ON ALL SIDES AND A MINIMUM OF 4" LAYER OF ASPHALT.
6. REFER TO STD DWG AT 7 FOR POLYMER CONCRETE JUNCTION BOX.

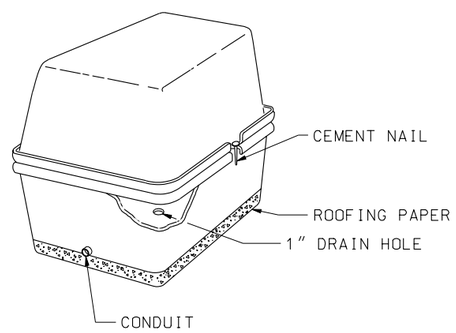

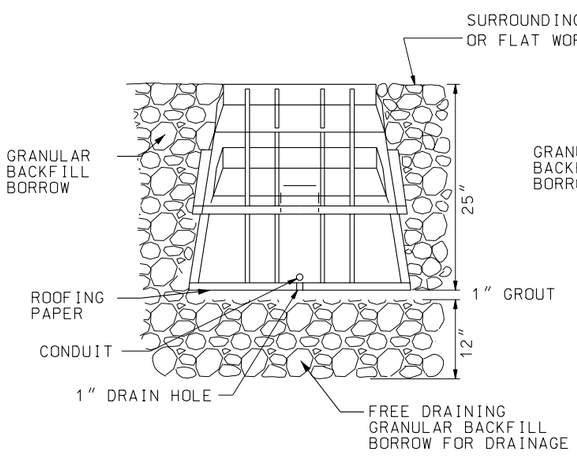

DOUBLE JUNCTION BOX TYPE II-P

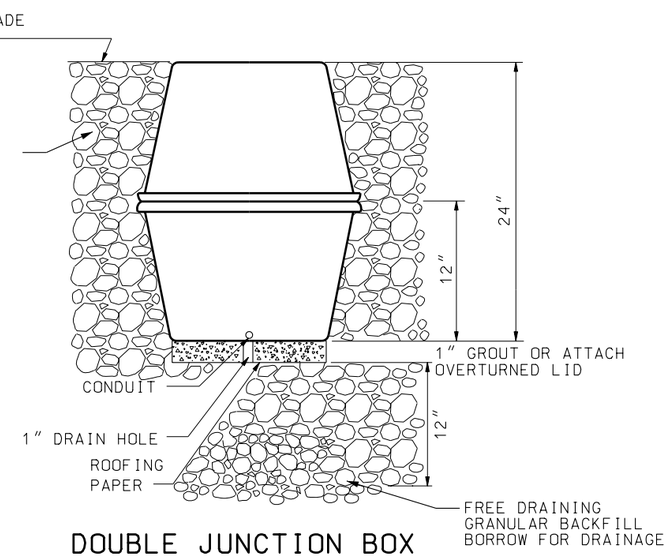

DOUBLE JUNCTION BOX TYPE I-P

REVISIONS

NO.	DATE	APPR.	REMARKS

UTAH DEPARTMENT OF TRANSPORTATION
STANDARD DRAWINGS FOR ROAD AND BRIDGE CONSTRUCTION
SALT LAKE CITY, UTAH

RECOMMENDED FOR APPROVAL — JULY 03,2002 DATE

CHAIRMAN STANDARDS COMMITTEE APPROVED — JULY 03,2002 DATE

DEPUTY DIRECTOR

JUNCTION BOX DETAILS

STANDARD DRAWING TITLE

STD DWG

SL 12

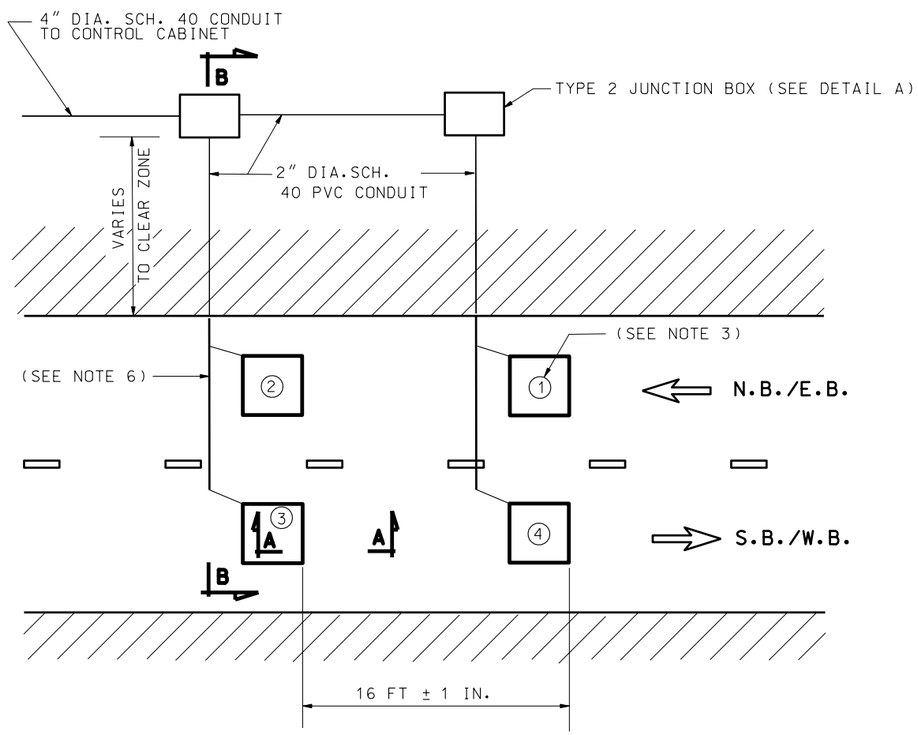

PLAN VIEW

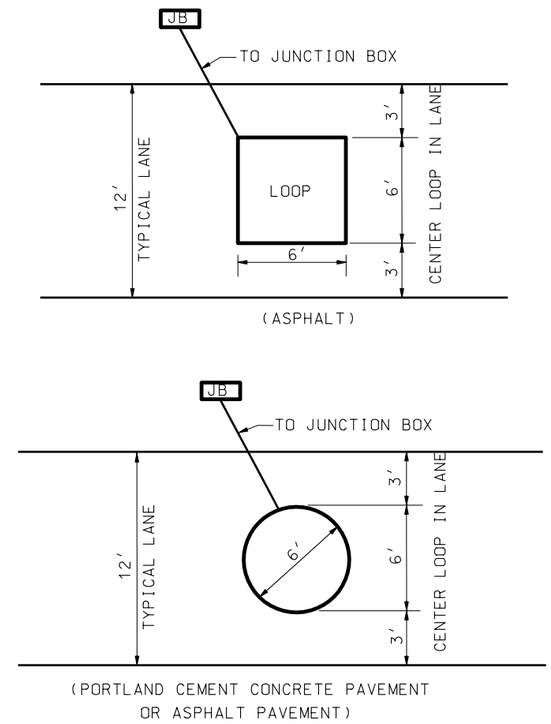

TYPICAL LOOP DETAIL

NOTES:

1. CONTACT UDOT TRAFFIC MONITORING SUPERVISOR, (801)964-4532. PRIOR TO CONSTRUCTION.
2. SEE PLAN SHEETS FOR DETECTOR LOOP LOCATIONS, STATION AND OFFSET GIVEN FOR CENTER LOOP.
3. TAG EACH LOOP WIRE IN EACH JUNCTION BOX. NUMBER EACH LOOP CONSECUTIVELY. BEGIN WITH FIRST LOOP IN NORTH BOUND (EAST BOUND) LANE. CLOSEST TO SHOULDER - IN DIRECTION OF TRAFFIC. THEN SECOND LOOP IN SAME LANE, THEN ADJACENT LANE, ENDING WITH SECOND LOOP IN OPPOSITE DIRECTION LANE CLOSEST TO SHOULDER.
4. USE SEPARATE WIRE FOR EACH LOOP. EACH LOOP WIRE TO BE CONTINUOUS, WITH NO SPLICES, EXCEPT WITH THE LEAD-IN WIRE AT THE JUNCTION BOX.
5. ALL LOOPS TO HAVE FOUR TURNS OF WIRE IN THE SAME DIRECTION, COUNTER CLOCKWISE, WITHOUT ANY TWIST.
6. TWIST WIRES BETWEEN LOOP AND JUNCTION BOX. ONE TWIST PER FOOT IN SAW CUT, THREE TWISTS PER FOOT IN CONDUIT.

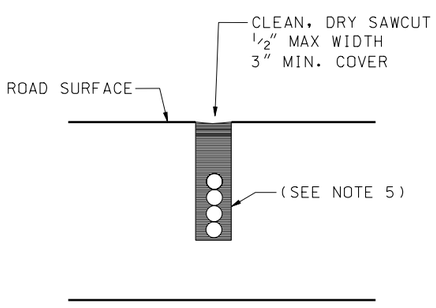

SECTION A-A

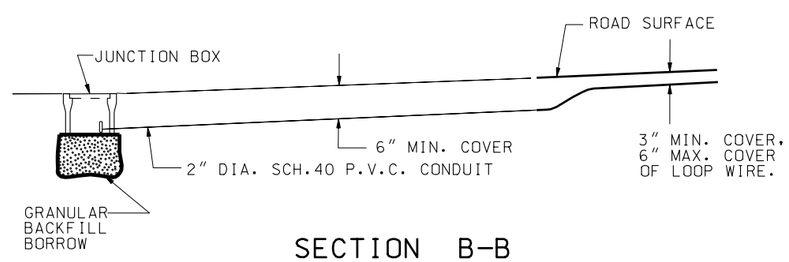

SECTION B-B

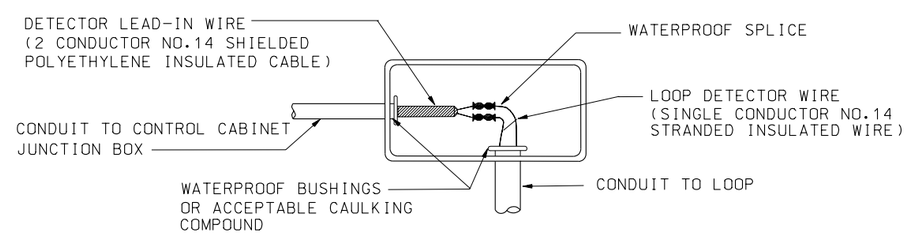

DETAIL "A"

REVISIONS

NO.	DATE	APPR.	REMARKS

UTAH DEPARTMENT OF TRANSPORTATION
STANDARD DRAWINGS FOR ROAD AND BRIDGE CONSTRUCTION
SALT LAKE CITY, UTAH

RECOMMENDED FOR APPROVAL — JULY 03,2002 DATE

CHAIRMAN STANDARDS COMMITTEE APPROVED — JULY 03,2002 DATE

DEPUTY DIRECTOR

STANDARD DRAWING TITLE: TRAFFIC COUNTING LOOP DETECTOR DETAIL

STD DWG
SL 13

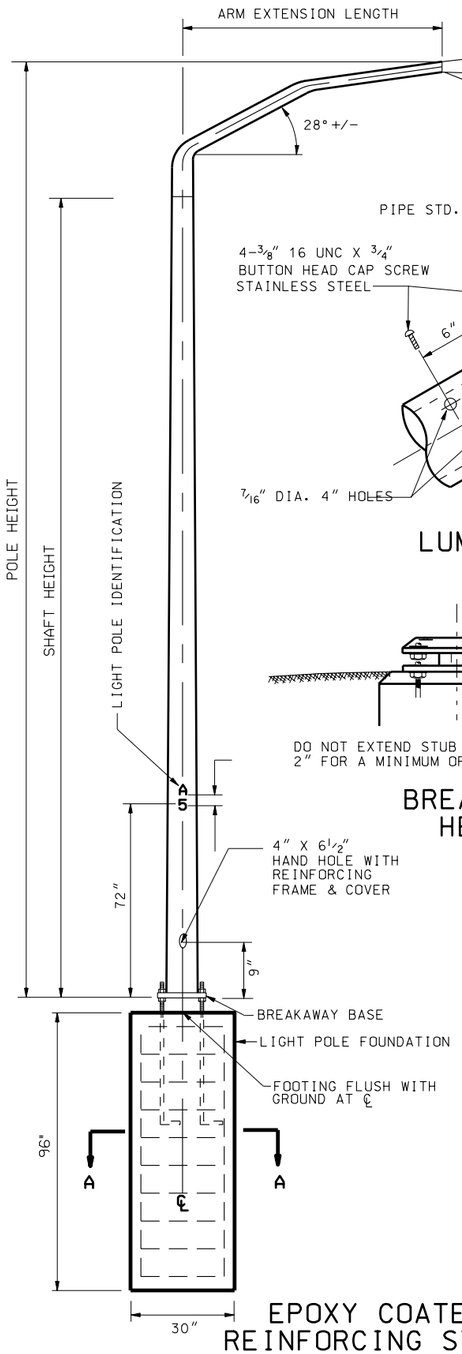

EPOXY COATED REINFORCING STEEL

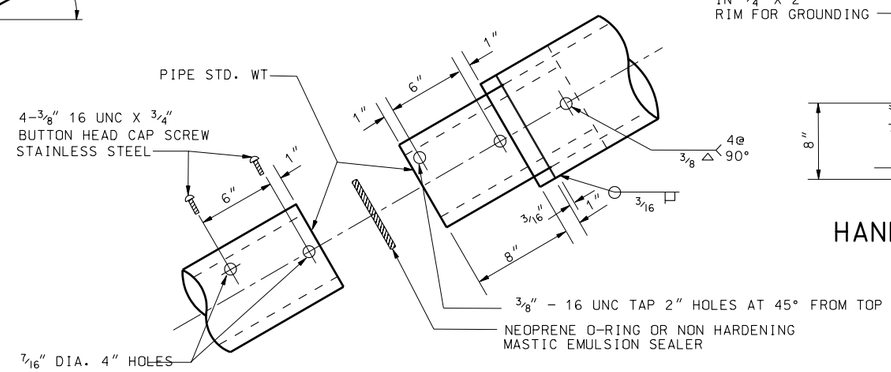

LUMINAIRE ARM CONNECTION

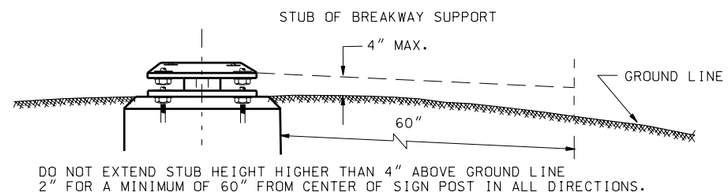

BREAKAWAY SUPPORT STUB HEIGHT MEASUREMENT

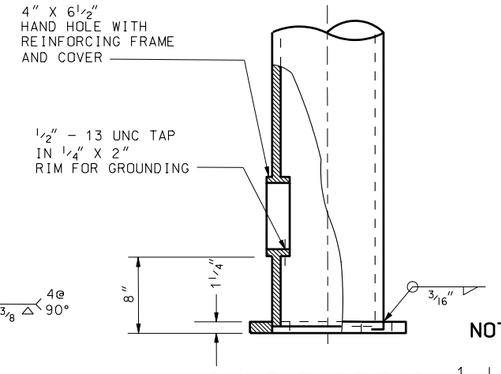

HAND HOLE DETAIL

ANCHOR BOLT

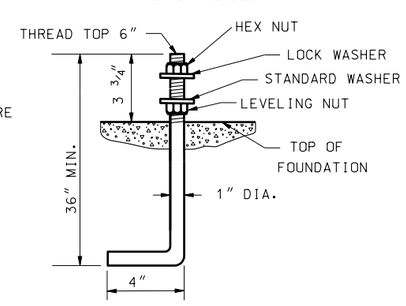

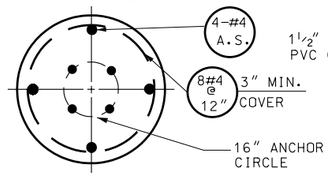

SECTION A-A

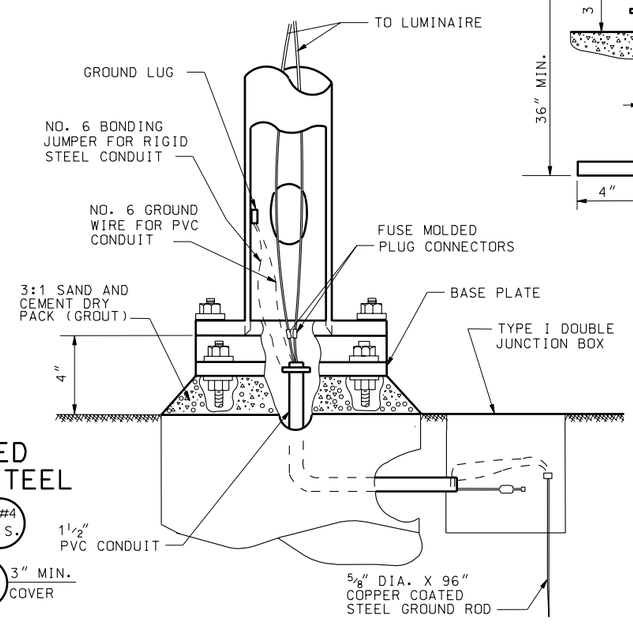

TYPICAL LIGHT POLE CONECTIONS

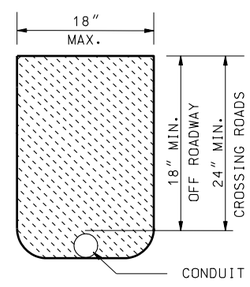

TRENCHING DETAIL

SHAFT HEIGHT	POLE HEIGHT	ARM EXTENSION DIMENTIONS		MIN. SHAFT BOTTOM O.D.	MIN. SHAFT TOP O.D.	MIN. WALL THICKNESS	MAX. SHAFT TOP DEFLECTION
		LENGTH	END DIA.				
28'-0"	31'-0"	6'-0"	2⅜"	7⅞"	4"	1196"	4-1/2"
	32'-0"	10'-0"	2⅜"	7⅞"	4"	1196"	4-1/2"
38'-0"	41'-0"	6'-0"	2⅜"	9⅜"	4"	1196"	6"
	42'-0"	10'-0"	2⅜"	9⅜"	4"	1196"	6"

NOTES:

1. LIGHT POLE ASSEMBLY:
   LIGHT POLE ASSEMBLY CONSIST OF A POLE, ARM, BASE, INTERNAL CONDUCTORS, IDENTIFICATION, SPLICES, MOLDED CONNECTORS, FUSES, ANCHOR BOLTS, HARDWARE AND BREAK-AWAY BASE OR ANCHOR BASE.

2. LIGHT POLE:
   A-PROVIDE ASTM A 570 GRADE 33 GALVANIZED IN ACCORDANCE WITH ASTM A 123 FOR LIGHT POLE AND TAPERED STEEL POLES. OTHER LIGHT POLE MATERIALS ACCEPTABLE SUBJECT TO THE APPROVAL OF DESIGN AND DRAWINGS PRIOR TO THE OPENING OF BIDS. SHOP DRAWINGS REQUIRED.
   B-USE THE SAME LIGHT POLE AND MAST ARM MATERIAL THROUGHOUT THE PROJECT MEETING THE REQUIREMENTS OF AASHTO SPECIFICATION FOR STRUCTURAL SUPPORT FOR HIGHWAY SIGN, LUMINARIES AND TRAFFIC SIGNALS FOR AN 80 MPH WIND WITH 104 MPH GUST.
   ALLOWABLE STRESSES: ASTM A 570 GRADE 33 - Fb=21.78 KSI (.66 Fy)
   Fv=10.89 KSI (.33 Fy)
   (INCREASE 40% FOR GROUP II AND III LOADING)
   C-PROVIDE COMPATIBLE ARM EXTENSION CONNECTIONS, COMPONENTS AND DETAILS WITH THE TYPE OF POLE UTILIZED.
   D-FURNISH LIGHT POLE BASE PLATE TO MATCH EXISTING BOLT CIRCLE WHEN POLE IS LOCATED ON STRUCTURE.
   E-DESIGN LIGHT POLE FOR A LUMINAIRE WEIGHT OF 75 lbs AND A PROJECTED AREA OF 3.3 sq.feet.
   F-ORIENT ALL ARM EXTENSIONS AT RIGHT ANGLES TO THE SURVEY LINE OF ROADWAY.
   G-OFFSET IS DEFINED AS THE DISTANCE FROM THE EDGE OF TRAVELED WAY TO THE SHAFT CENTER OF LIGHT POLE.
   H-CENTER SHAFT TOP OVER CENTER OF FOUNDATION AFTER ARM EXTENSION, LUMINAIRE AND ALL ELECTRICAL ACCESSORIES ARE IN PLACE.
   J-MAXIMUM ALLOWABLE DEFLECTION AT SHAFT TOP IS BASED ON 100 POUNDS. HORIZONTAL LOAD APPLIED AT 6 inches BELOW TOP. USE DEFLECTION CRITERIA REGARDLESS OF LIGHT POLE MATERIAL USED.
   K-LOCATE LIGHT POLE BEHIND SIGNS WHEN THERE IS CONFLICT.

3. FOUNDATION:
   PROVIDE CAST-IN PLACE IN AUGERED HOLES WITH CLASS A(AE) CONCRETE FOR ALL FOUNDATIONS.

4. BREAKAWAY BASE:
   A-USE BREAKAWAY BASE ON ALL LIGHT POLES EXCEPT THOSE LOCATED ON STRUCTURES OR SPECIFIED ON PLANS.
   B-SEE STD DWG SL 15 FOR BREAKAWAY BASE DETAILS.

5. ANCHOR BOLTS:
   A-HOOK ASTM A 307, ANCHOR BOLTS 1"DIA x 36"x4" WITH HEAVY HEXAGON NUTS. GALVANIZE ALL NUTS, WASHERS AND TOP 10" OF THE ANCHOR BOLTS IN ACCORDANCE WITH ASTM A 153. ANCHOR BOLT THREADS PROVIDE OPEN AND DEFECT FREE ANCHOR BOLT THREADS FREE RUN NUTS BY HAND FOR TOTAL THREAD LENGTH.
   B-PLACE ANCHOR BOLTS BY TEMPLATE. DO NOT WELD TO REINFORCING STEEL.

REVISIONS

NO.	DATE	APPR.	REMARKS

UTAH DEPARTMENT OF TRANSPORTATION
STANDARD DRAWINGS FOR ROAD AND BRIDGE CONSTRUCTION
SALT LAKE CITY, UTAH

RECOMMENDED FOR APPROVAL — JULY 03,2002 DATE
CHAIRMAN STANDARDS COMMITTEE APPROVED — JULY 03,2002 DATE
DEPUTY DIRECTOR

LIGHT POLE BREAKAWAY BASE
STANDARD DRAWING TITLE

STD DWG
SL 14

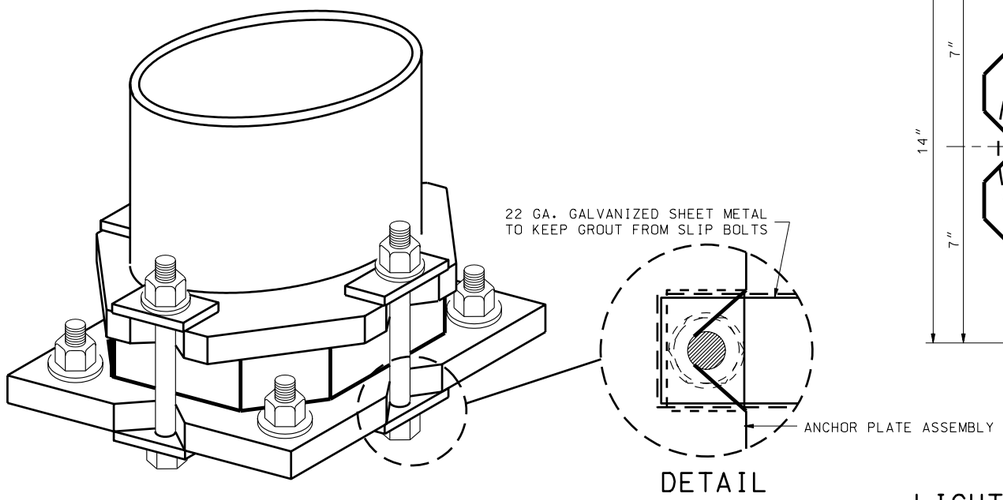

DETAIL

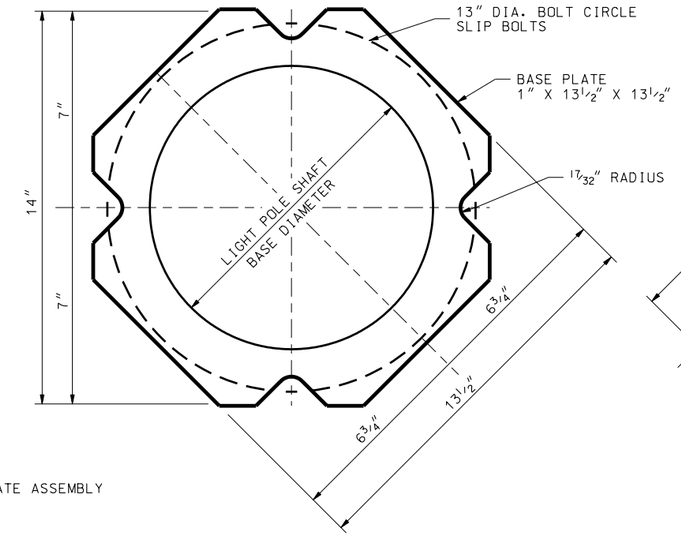

LIGHT POLE BASE PLATE

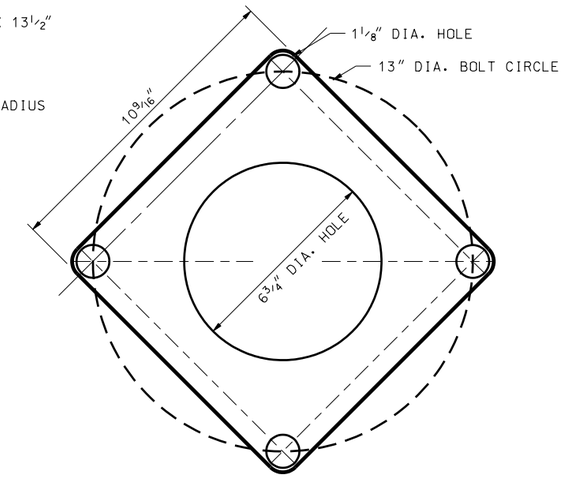

SLIP BOLT RETAINER GASKET
(28 GAUGE STAINLESS STEEL)

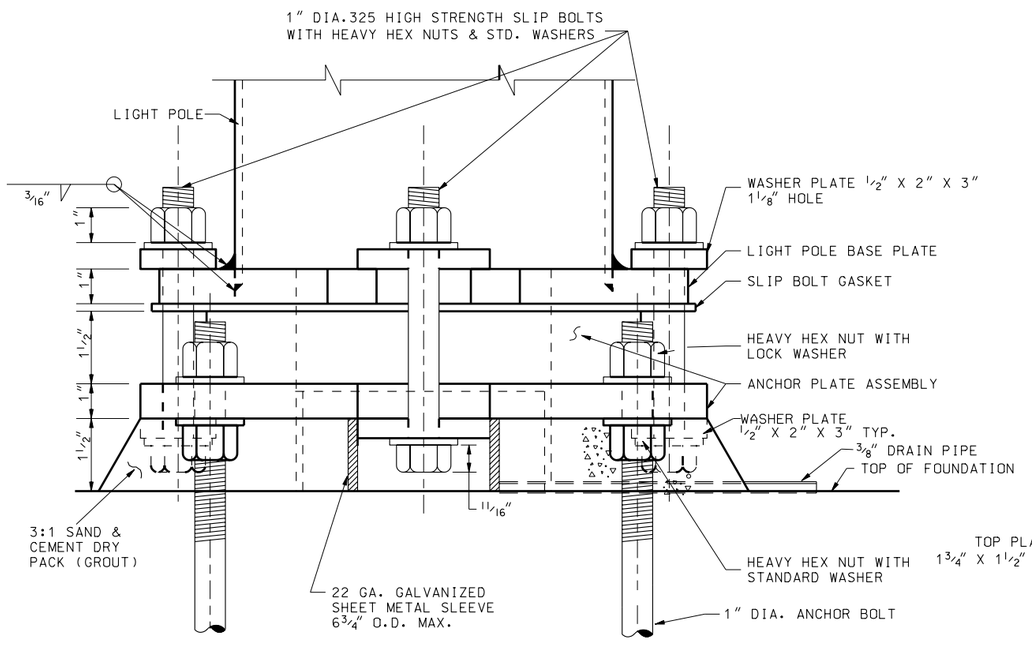

LIGHT POLE BASE

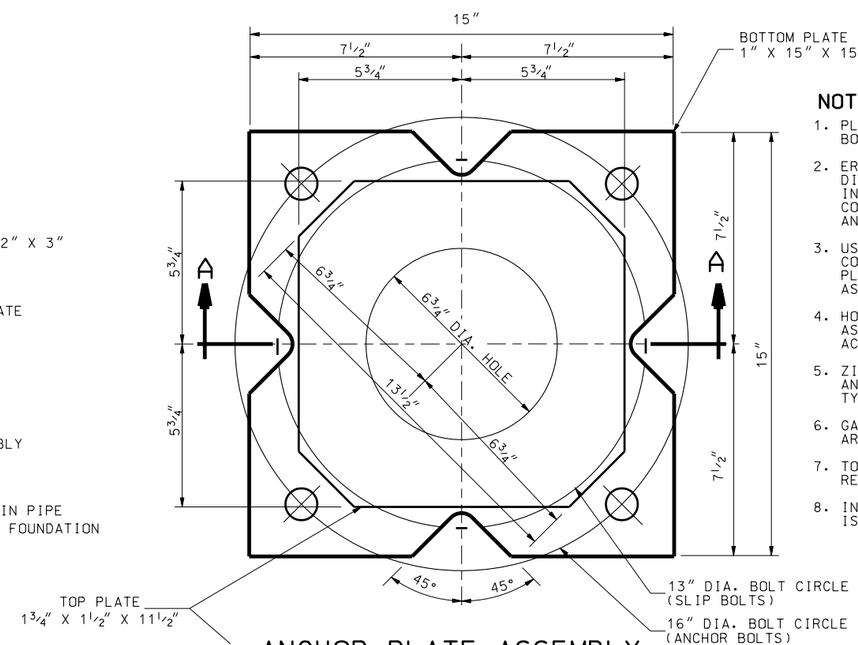

ANCHOR PLATE ASSEMBLY

NOTES:

1. PLACE ANCHOR PLATE ASSEMBLY ON ANCHOR BOLT LEVELING NUTS AND SECURE IN PLACE.
2. ERECT LIGHT POLE AND SECURE WITH 1 INCH DIA. HIGH STRENGTH BOLTS. INSTALL BOLTS IN THE SLOTS SO THE BOLT SHANKS ARE IN CONTACT WITH THE LIGHT POLE PLATE AND ANCHOR PLATE ASSEMBLY.
3. USE STRUCTURAL STEEL FOR PLATES IN COMPLIANCE WITH ASTM A 36. FURNISH ANCHOR PLATE ASSEMBLY CAST IN COMPLANCE WITH ASTM A 27 GRADE 70-40.
4. HOT-DIP GALVANIZE ALL STEEL PLATE ASSEMBLIES AFTER FABRICATION IN ACCORDANCE WITH ASTM A 123.
5. ZINC ELECTRO PLATE ALL SLIP BOLTS, NUTS AND WASHERS IN ACCORDANCE WITH ASTM A 165 TYPE NS.
6. GALVANIZING BEADS AND RUNS IN ALL CONTACT AREAS OF PLATES IS UNACCEPTABLE.
7. TORQUE ALL SLIP BOLTS TO 80 FT LBS, RELEASE AND RETORQUE TO 70 FT LBS.
8. INSTALL DRY PACK GROUT AFTER LIGHT POLE IS PLACED IN FINAL POSITION.

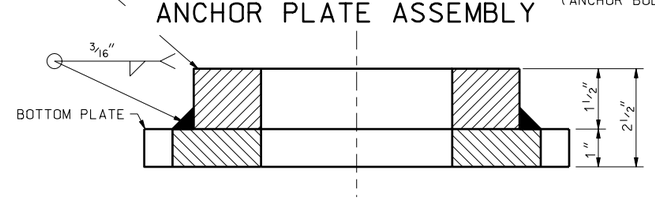

SECTION A – A

REVISIONS

NO.	DATE	APPR.	REMARKS

UTAH DEPARTMENT OF TRANSPORTATION
STANDARD DRAWINGS FOR ROAD AND BRIDGE CONSTRUCTION
SALT LAKE CITY, UTAH

RECOMMENDED FOR APPROVAL — JULY 03,2002 DATE

CHAIRMAN STANDARDS COMMITTEE APPROVED — JULY 03,2002 DATE

DEPUTY DIRECTOR

STANDARD DRAWING TITLE: LUMINAIRE BREAKAWAY BASE DETAIL

STD DWG
SL 15

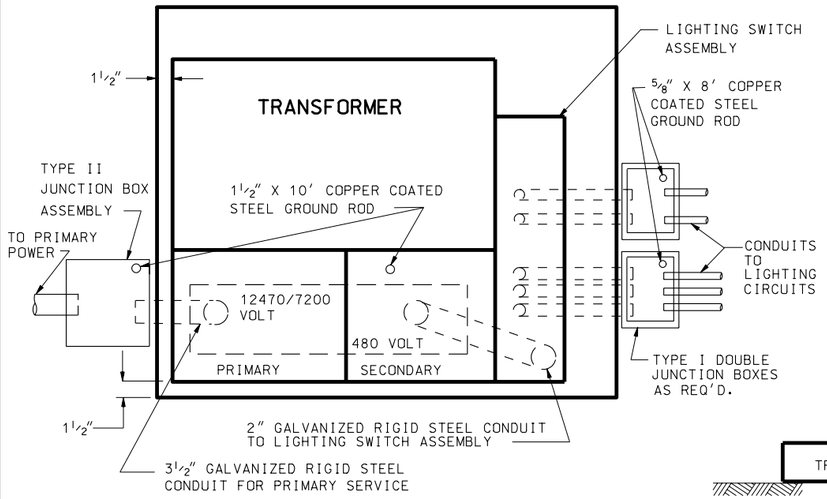

DIMENSION "A"		
25 TO 50 KVA	75 KVA	100 KVA
33"	40"	40"

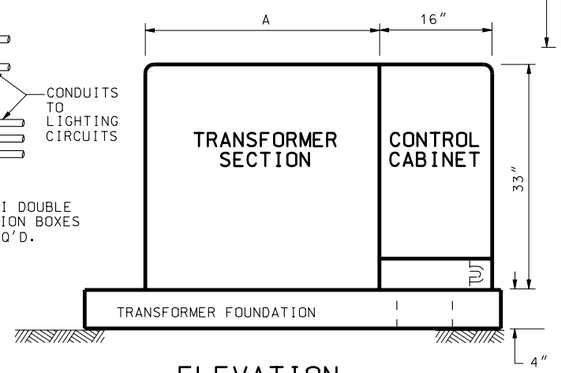

ELEVATION

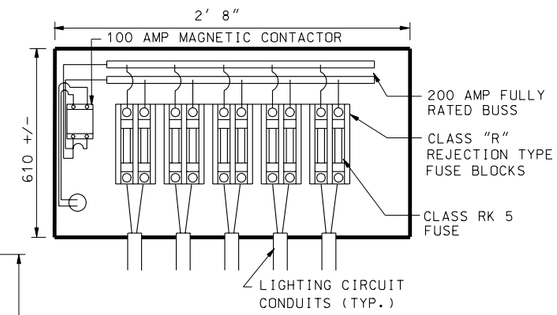

LIGHTING SWITCH ASSEMBLY

NOTES:

1. POWER COMPANY SERVICE POINT. SINGLE PHASE VOLTAGE WITH DISCONNECTING PROVISIONS. POWER COMPANY TO RUN UNDER GROUND CABLE CONNECTION IN CONTRACTOR FURNISHED TRENCH TO TRANSFORMER HIGH VOLTAGE TERMINALS.
   A-CONTRACTOR CONTACTS SERVING POWER COMPANY TO VERIFY PRIMARY VOLTAGE AND TYPE OF CONNECTION.
   B-CONTRACTOR NOTIFIES SERVING POWER COMPANY A MINIMUM OF 24 HOURS IN ADVANCE OF DESIRED POWER SOURCE CONNECTION.
2. GROUND TRANSFORMER FRAME.
3. FOUNDATION MOUNTED TRANSFORMER WITH DEAD FRONT DESIGN.
4. LIGHTING SWITCH ASSEMBLY WITH LOAD FUSE BLOCK, FUSES, AND CONDUITS FOR LIGHTING CIRCUITS AS PER PLANS.
5. INDIVIDUAL LIGHTING CIRCUITS TO TYPE I DOUBLE JUNCTION BOXES.
6. PHOTO ELECTRIC CONTROL AND MOUNTING RECEPTACLE: STRAP MOUNTED AT TOP OF NEAREST LIGHT POLE (INCLUDE CONTROL CIRCUIT IN LIGHTING CIRCUIT CONDUIT) OR MOUNTED 10 FEET HIGH ON 2 INCH DIA. GALVANIZED RIGID STEEL PIPE LOCATED NEXT TO TRANSFORMER.
7. POWER POLE MOUNTED LIGHTNING ARRESTERS REQUIRED.
8. PROVIDE WELL DRAINED TRANSFORMER PAD LOCATION. EXACT LOCATION OF PAD AND JUNCTION BOXES DETERMINED BY ENGINEER.

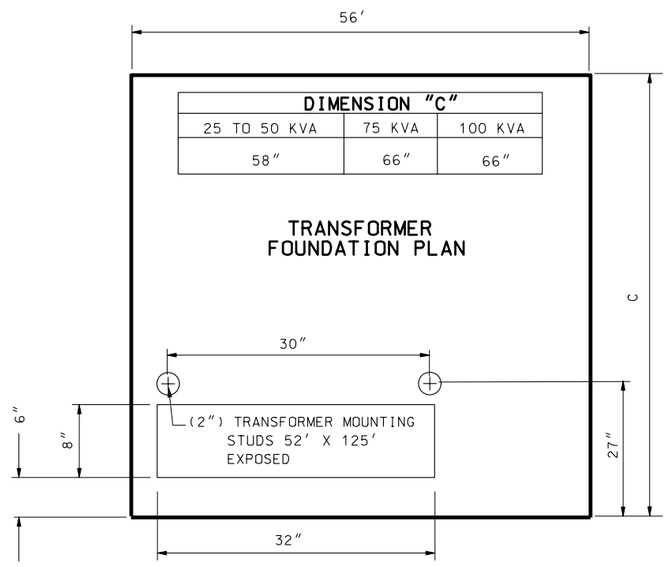

DIMENSION "C"		
25 TO 50 KVA	75 KVA	100 KVA
58"	66"	66"

TRANSFORMER
FOUNDATION PLAN

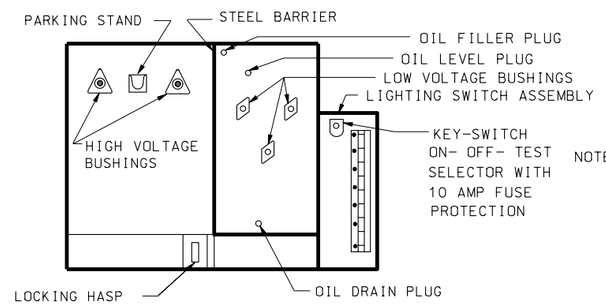

FRONT VIEW, DOOR OPEN

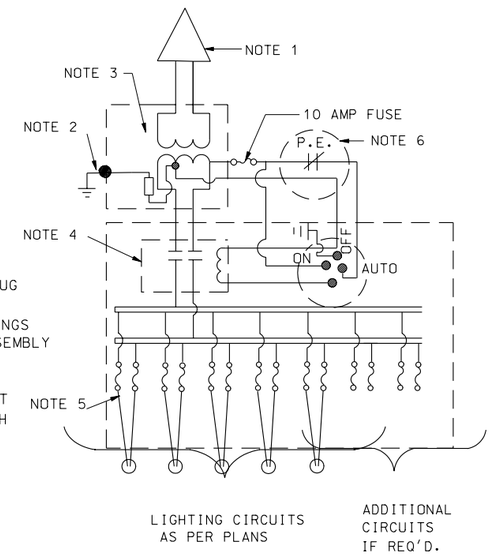

SCHEMATIC CONNECTION DIAGRAM

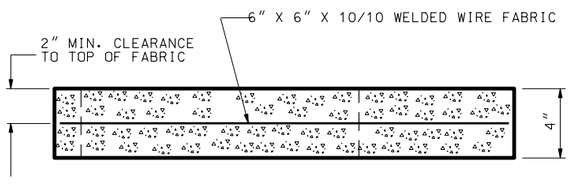

REINFORCED CONCRETE

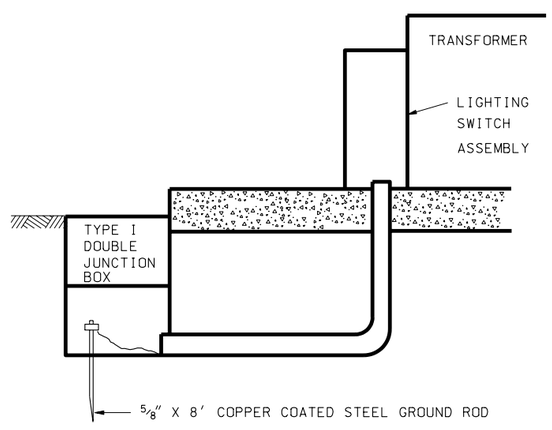

SIDE VIEW

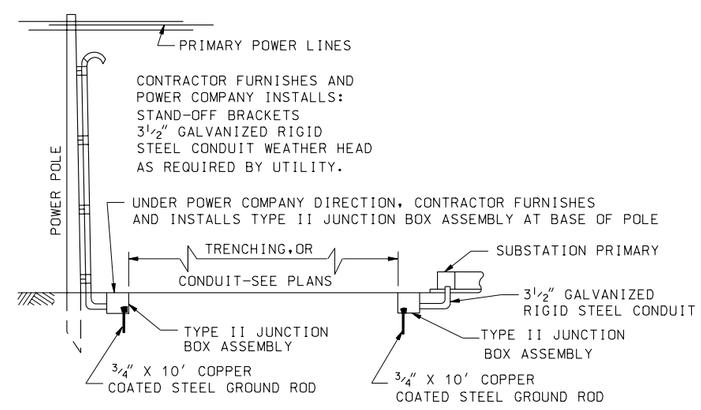

PRIMARY POWER SOURCE DETAIL

NO.	DATE	APPR.	REMARKS

REVISIONS

UTAH DEPARTMENT OF TRANSPORTATION
STANDARD DRAWINGS FOR ROAD AND BRIDGE CONSTRUCTION
SALT LAKE CITY, UTAH

RECOMMENDED FOR APPROVAL — JULY 03,2002 DATE

CHAIRMAN STANDARDS COMMITTEE APPROVED — JULY 03,2002 DATE

DEPUTY DIRECTOR

STANDARD DRAWING TITLE: SINGLE TRANSFORMER SUBSTATION DETAILS

STD DWG
SL 16

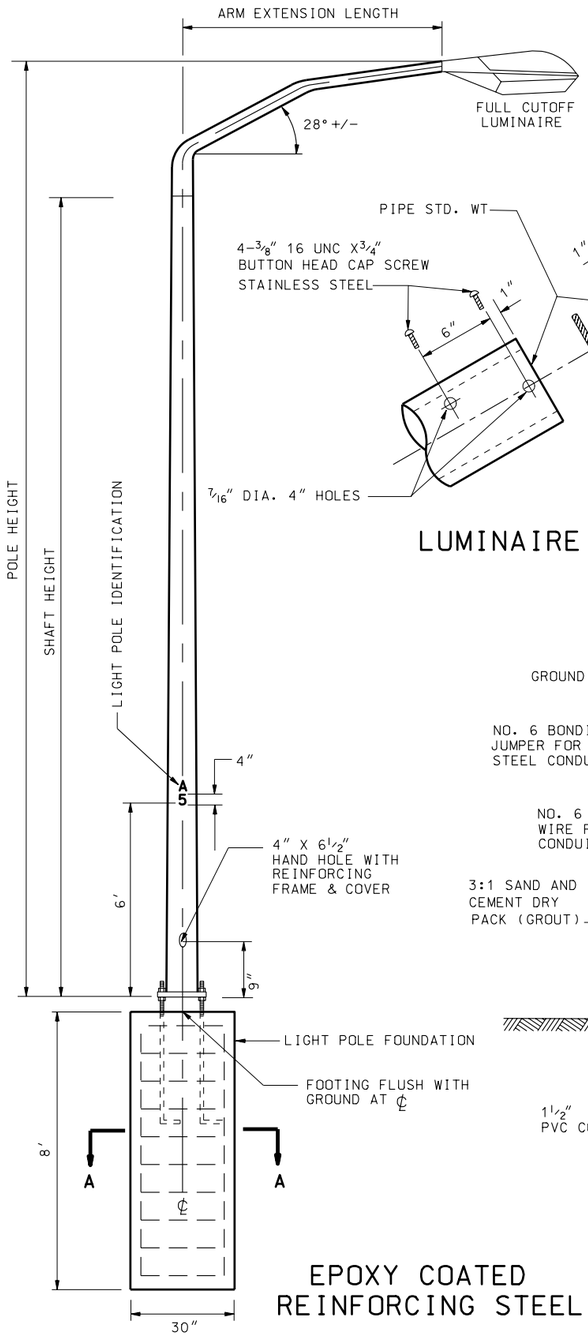

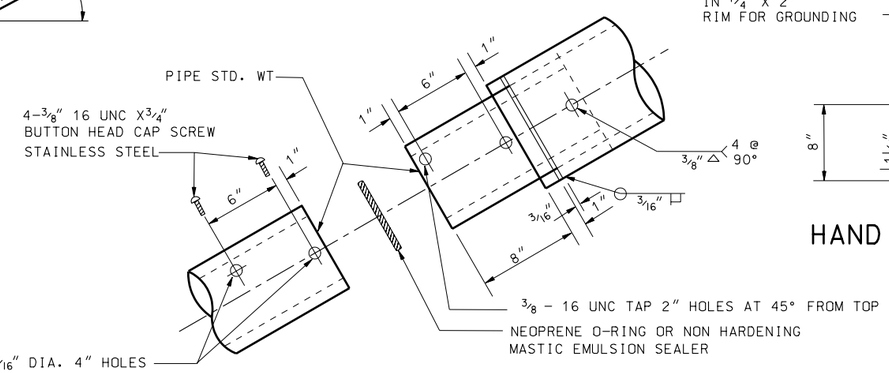

LUMINAIRE ARM CONNECTION

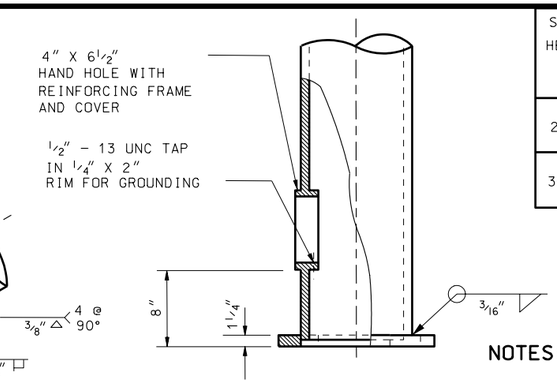

HAND HOLE DETAIL

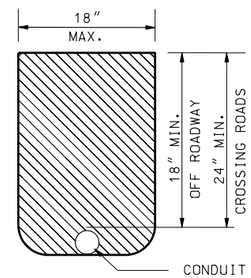

TRENCHING DETAIL

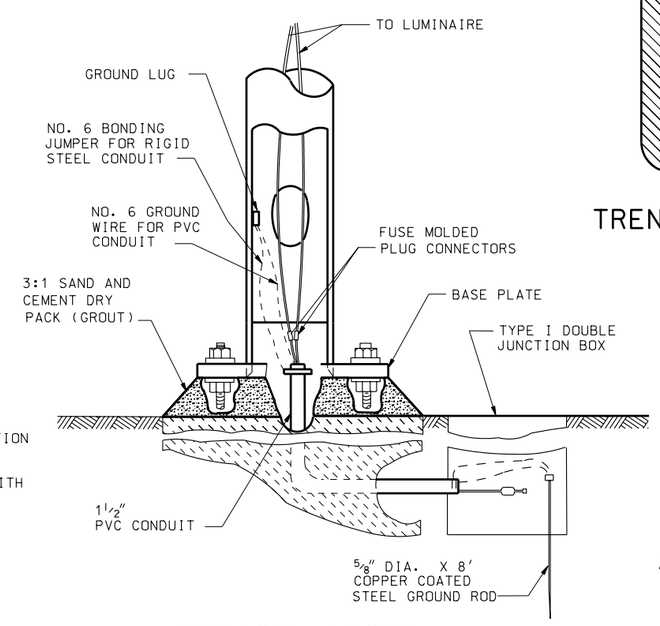

TYPICAL LIGHT POLE CONNECTIONS

EPOXY COATED REINFORCING STEEL

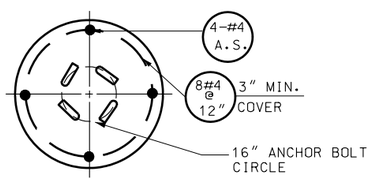

SECTION A-A

ANCHOR BOLT

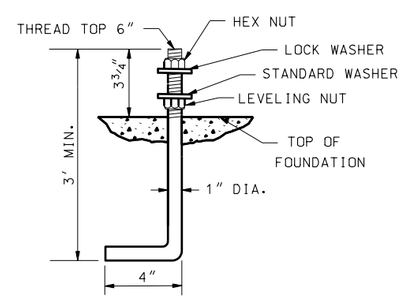

SHAFT HEIGHT	POLE HEIGHT	ARM EXTENSION DIMENTIONS		MIN. SHAFT BOTTOM O.D.	MIN. SHAFT TOP O.D.	MIN. WALL THICKNESS	MAX. SHAFT TOP DEFLECTION
		LENGTH	END DIA.				
28'-0"	31'-0"	6'-0"	2⅜"	7⅞"	4"	1196"	4-1/2"
	32'-0"	10'-0"	2⅜"	7⅞"	4"	1196"	4-1/2"
38'-0"	41'-0"	6'-0"	2⅜"	9⅜"	4"	1196"	6"
	42'-0"	10'-0"	2⅜"	9⅜"	4"	1196"	6"

NOTES:

1. LIGHT POLE ASSEMBLY:
   A-THE ASSEMBLY CONSISTS OF A POLE, ARM, BASE, INTERNAL CONDUCTORS, IDENTIFICATION, SPLICES, MOLDED CONNECTORS, FUSES, ANCHOR BOLTS, HARDWARE AND BREAK-AWAY BASE OR ANCHOR BASE.

2. LIGHT POLE:
   A-PROVIDE ASTM A 570 GRADE 33 GALVANIZED IN ACCORDANCE WITH ASTM A 123 FOR LIGHT POLE AND TAPERED STEEL POLES. OTHER LIGHT POLE MATERIALS ACCEPTABLE SUBJECT TO THE APPROVAL OF DESIGN AND DRAWINGS PRIOR TO THE OPENING OF BIDS. SHOP DRAWINGS REQUIRED.
   B-USE THE SAME LIGHT POLE AND MAST ARM THROUGOUT THE PROJECT MEETING THE REQUIREMENTS OF AASHTO SPECIFICATION FOR STRUCTURAL SUPPORT FOR HIGWAY SIGN, LUMINARES AND TRAFFIC SIGNALS FOR AN 80 MPH WIND WITH 104 MPH GUST.
   ALLOWABLE STRESSES: ASTM A 570 GRADE 33 - Fb=21.78 KSI (.66 Fy)
   Fv=10.89 KSI (.33 Fy)
   (INCREASE 40% FOR GROUP II AND III LOADING)
   C-PROVIDE COMPATIBLE ARM EXTENSION CONNECTIONS, COMPONENTS AND DETAILS WITH THE TYPE OF POLE UTILIZED.
   D-FURNISH LIGHT POLE BASE PLATE TO MATCH EXISTING BOLT CIRCLE WHEN POLE IS LOCATED ON STRUCTURE.
   E-DESIGN LIGHT POLE FOR A LUMINARE WEIGHT OF 75 lbs AND A PROJECTED AREA OF 3.3 sq.feet.
   F-ORIENT ALL ARM EXTENSIONS AT RIGHT ANGLES TO THE SURVEY LINE OF ROADWAY.
   G-OFFSET IS DEFINED AS THE DISTANCE FROM THE EDGE OF TRAVELED WAY TO THE SHAFT CENTER OF LIGHT POLE.
   H-CENTER SHAFT TOP OVER CENTER OF FUNDATION AFTER ARM EXTENSION, LUMINARE AND ALL ELECTRICAL ACCESSORIES ARE IN PLACE.
   J-MAXIMUM ALLOWABLE DEFLECTION AT SHAFT TOP IS BASED ON 100 POUNDS. HORIZONTAL LOAD APPLIAD AT 6 inches BELOW TOP. USE DEFLECTION CRITERIA REGARDLESS OF LIGHT POLE MATERIAL USED.
   K-LOCATE LIGHT POLE BEHIND SIGNS WHEN THERE IS CONFLICT.

3. FOUNDATION:
   A-PROVIDE CAST-IN PLACE IN AUGERED HOLES WITH CLASS A(AE) CONCRETE FOR ALL FOUNDATIONS.

4. ANCHOR BOLTS:
   A-HOOK ASTM A 307, ANCHOR BOLTS 1"DIA x 36"x4" WITH HEAVY HEXAGON NUTS. GALVANIZE ALL NUTS, WASHERS AND TOP 10" OF THE ANCHOR BOLTS IN ACCORDANCE WITH ASTM A 153. ANCHOR BOLT THREADS PROVIDE OPEN AND DEFECT FREE ANCHOR BOLT THREADS FREE RUN NUTS BY HAND FOR TOTAL THREAD LENGTH.
   B-PLACE ANCHOR BOLTS BY TEMPLATE. DO NOT WELD TO REINFORCING STEEL.

REVISIONS

NO.	DATE	APPR.	REMARKS

UTAH DEPARTMENT OF TRANSPORTATION
STANDARD DRAWINGS FOR ROAD AND BRIDGE CONSTRUCTION
SALT LAKE CITY, UTAH

RECOMMENDED FOR APPROVAL — JULY 03,2002 DATE
CHAIRMAN STANDARDS COMMITTEE APPROVED — JULY 03,2002 DATE
DEPUTY DIRECTOR

STANDARD DRAWING TITLE
LIGHT POLE ANCHOR BASE

STD DWG
SL 17

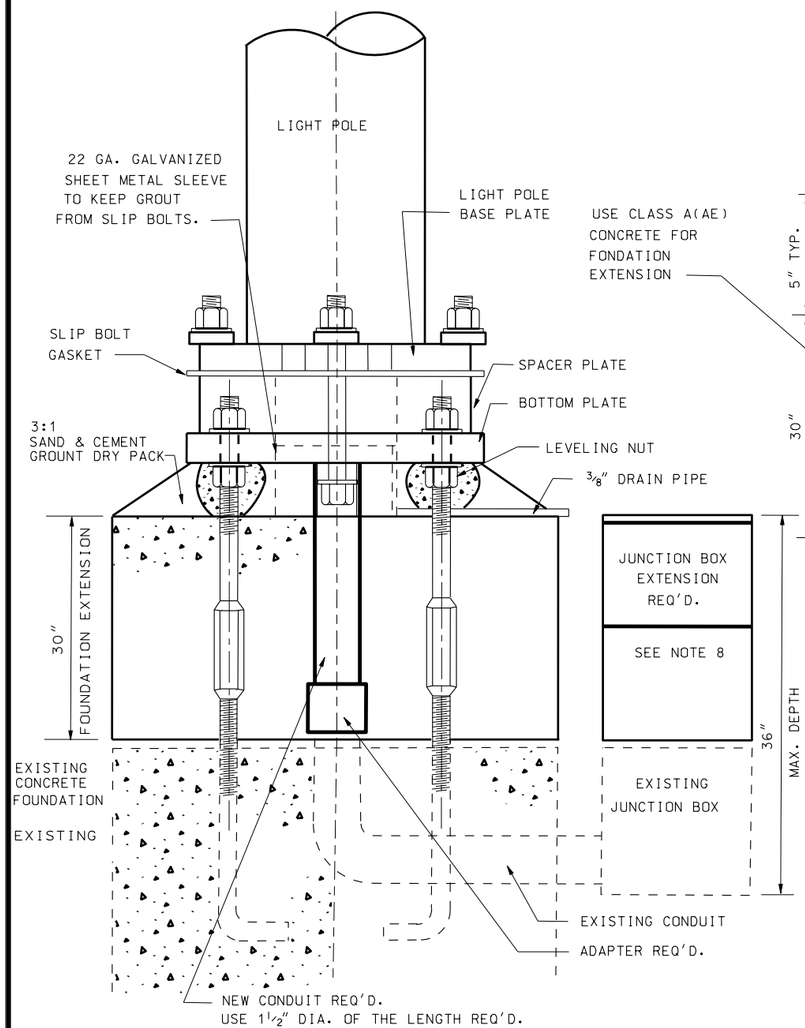

FOUNDATION EXTENSION DETAIL

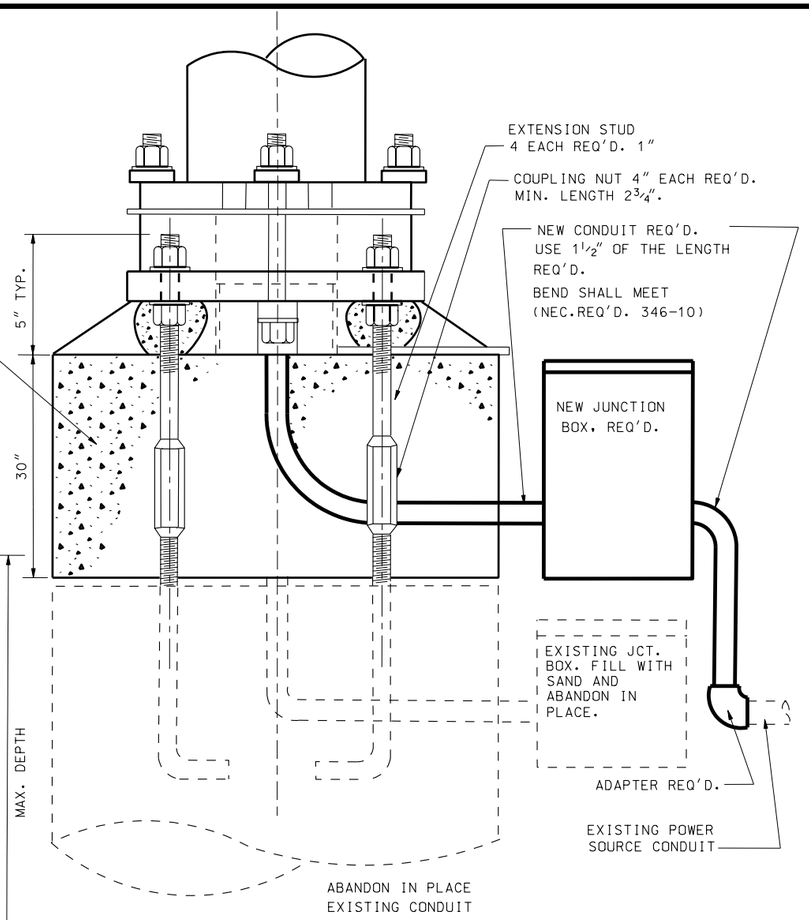

FOUNDATION EXTENSION DETAIL IN EXCESS OF 30"

NOTES:

1. USE COUPLING NUTS AND EXTENSION STUDS ON EXISTING LIGHT POLE FOUNDATION FOR ANY EXTENSION HEIGHT REQUIRED.
2. PROVIDE COUPLING NUTS CONFORMING WITH ASTM A 307 SPECIFICATIONS WITH A MINIMUM LENGTH OF 2 3/4 INCHES COUPLING NUTS IN ACCORDANCE WITH (ASTM A 123), OR ZINC PLATED (ASTM A 152)
3. USE 1 INCH DIA. EXTENSION STUDS CONFORMING TO ASTM A 307. GALVANIZE EXTENSION STUDS CONFORMING TO ASTM A 123 OR ZINC PLATE CONFORMING TO ASTM A 153.
4. ATTACH COUPLING NUTS TO EXISTING ANCHOR BOLTS. INSTALL EXTENSION STUDS TO PROVIDE 5 INCHES PROJECTION ABOVE TOP OF NEW FOOTING. EXTEND AND/OR PLACE CONDUIT AS SHOWN. PLACE REINFORCING STEEL AS SHOWN. FORM AND CAST FOUNDATION EXTENSION WITH CLASS A(AE) CONCRETE.
5. REINSTALL BREAKAWAY BASE-PLATE BOTTOM AND SPACER PLATE ON EXTENDED ANCHOR BOLT LEVELING NUTS.
6. ERECT AND PLUMB POLE INSTALL SLIP BOLT SHANKS IN CONTACT WITH PLATES. TORQUE SLIP BOLTS TO 80 FT-LBS. RELEASE AND RE-TORQUE TO 66 FT-LBS VERTICALLY OVER CENTER OF BASE.
7. GROUT AFTER LIGHT POLE IS SECURED IN FINAL POSITION.
8. EXTEND FOUNDATION EXTENSION, TO A MAXIMUM OF 30 INCHES, USE EXISTING CONDUIT AND JUNCTION BOX. EXTEND CONDUIT AS SHOWN. PLACE JUNCTION BOX TO GRADE BY ADDITION OF JUNCTION BOX TO A MAXIMUM JUNCTION BOX DEPTH OF 36 INCHES, BEYOND 36 INCHES INSTALL A NEW JUNCTION BOX AND CONDUIT SYSTEM AS DETAILED.
9. ADJUST JUNCTION BOXES NOT LOCATED AT LIGHT POLE TO GRADE BY ADDITION OF JUNCTION BOX EXTENSIONS TO MAXIMUM JUNCTION BOX DEPTH OF 36 INCHES, BEYOND 36 INCHES INSTALL A NEW JUNCTION BOX.
10. PROVIDE NEW CONDUIT LENGTH AND CONFIGURATION NECESSARY TO COUPLE THE EXISTING CONDUIT THROUGH THE FOUNDATION EXTENSION.

REINFORCING STEEL SHALL COMPLY WITH ASTM DESIGNATION A 615 GRADE 60

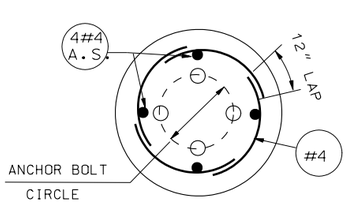

TIE REINFORCING HOOP TIE TO ANCHOR BOLT EXTENSION

SPACING GUIDE FOR REINFORCING STEEL HOOPTIE

RISE IN FOUNDATION EXTENSION	NO. OF RINGS
6" TO 12"	2
12" TO 30"	3
30" TO 42"	4
42" +	12" SPACING

TOP RING 3" CONCRETE COVER

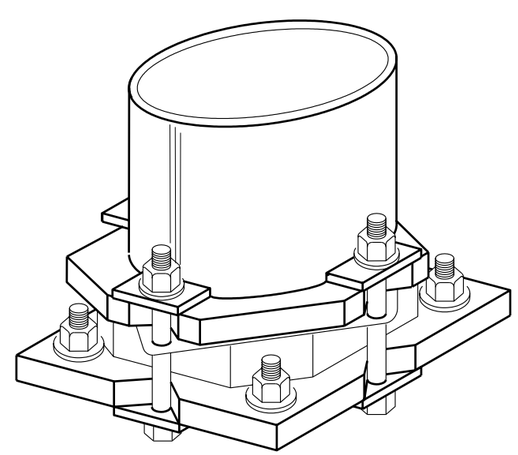

BREAKAWAY BASE REASSEMBLY DETAIL

REVISIONS

NO.	DATE	APPR.	REMARKS

UTAH DEPARTMENT OF TRANSPORTATION
STANDARD DRAWINGS FOR ROAD AND BRIDGE CONSTRUCTION
SALT LAKE CITY, UTAH

RECOMMENDED FOR APPROVAL — JULY 03,2002 DATE

CHAIRMAN STANDARDS COMMITTEE APPROVED — JULY 03,2002 DATE

DEPUTY DIRECTOR

STANDARD DRAWING TITLE: LIGHT POLE FOUNDATION EXTENSION

STD DWG SL 18

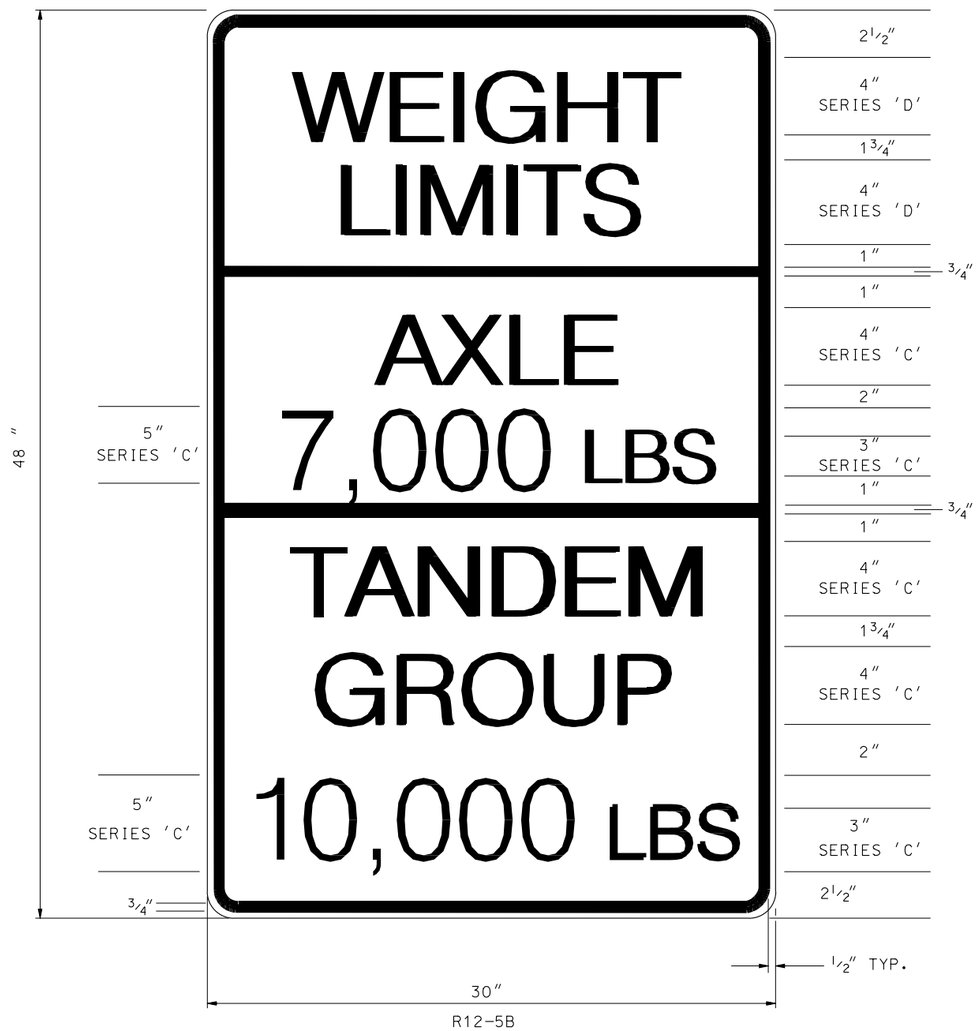

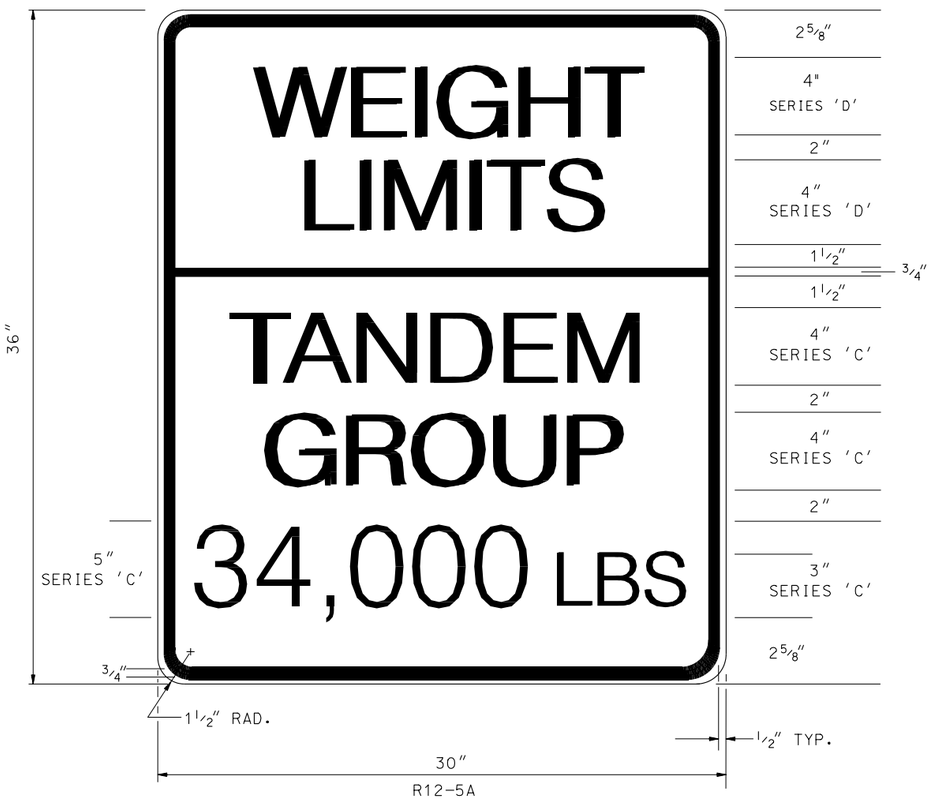

REVISIONS

NO.	DATE	APPR.	REMARKS

UTAH DEPARTMENT OF TRANSPORTATION
STANDARD DRAWINGS FOR ROAD AND BRIDGE CONSTRUCTION
SALT LAKE CITY, UTAH

RECOMMENDED FOR APPROVAL — JULY 03,2002 DATE

CHAIRMAN STANDARDS COMMITTEE APPROVED — JULY 03,2002 DATE

DEPUTY DIRECTOR

STANDARD DRAWING TITLE: BRIDGE LOAD LIMITS SIGNS

STD DWG
SN 1

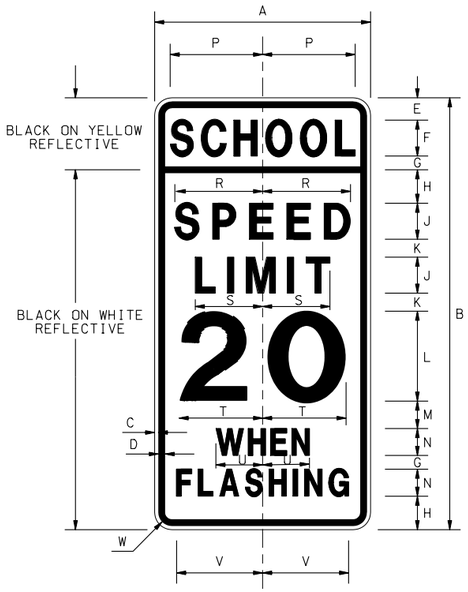

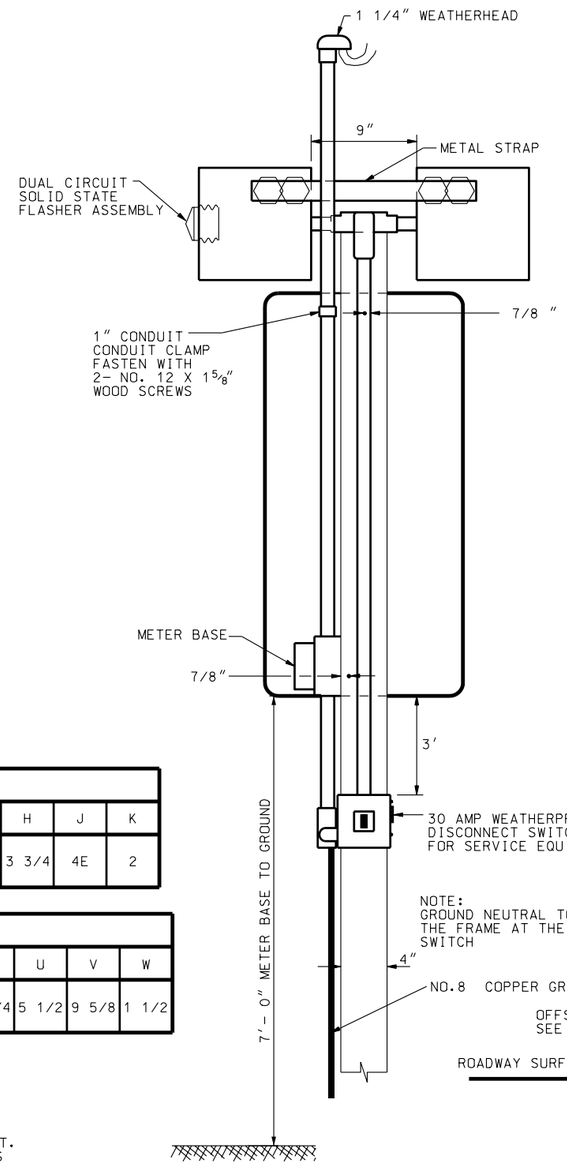

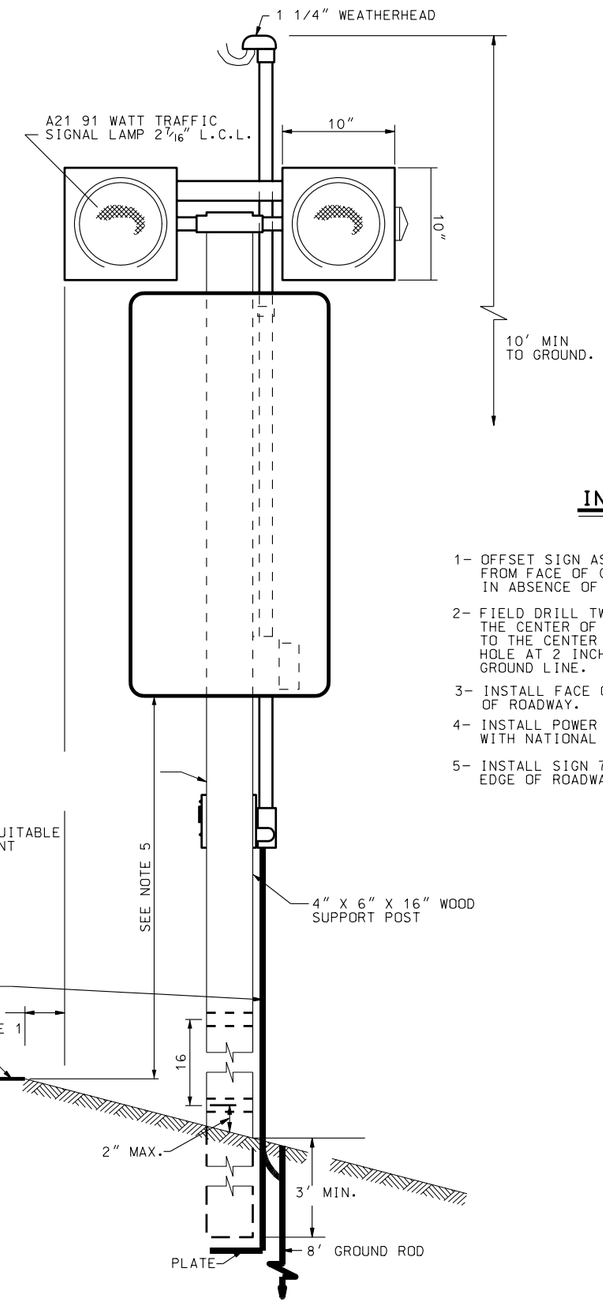

SIGN	DIMENSION (INCHES)									
	A	B	C	D	E	F	G	H	J	K
STANDARD OR MINIMUM	24	48	3/8	3/4	2 1/2	4D	1 1/2	3 3/4	4E	2

SIGN	DIMENSION (INCHES)									
	L	M	N	P	R	S	T	U	V	W
STANDARD OR MINIMUM	10E	3	3D	10	9 5/8	7 5/16	9 1/4	5 1/2	9 5/8	1 1/2

ASSEMBLY

1- PLACE TOP OF SIGN 8" BELOW TOP OF SUPPORT POST. ATTACH TO POSTS WITH 4- 7"X3/8" BOLTS WITH NUTS AND WASHERS.

INSTALLATION

1- OFFSET SIGN ASSEMBLY A MINIMUM OF 1.5 FT. FROM FACE OF CURB OR 6 FT. FROM TRAVELED WAY IN ABSENCE OF CURB.

2- FIELD DRILL TWO 1 1/2" DIAMETER HOLES IN THE CENTER OF THE POST. DRILL PERPENDICULAR TO THE CENTER LINE OF THE ROAD. PLACE ONE HOLE AT 2 INCHES AND ONE AT 18 INCHES ABOVE GROUND LINE.

3- INSTALL FACE OF SIGN AT 90° ANGLE TO THE EDGE OF ROADWAY.

4- INSTALL POWER SUPPLY (120 VOLTS) IN ACCORDANCE WITH NATIONAL ELECTRICAL CODE.

5- INSTALL SIGN 7' AS MEASURED FROM THE NEAREST EDGE OF ROADWAY SURFACE TO BOTTOM OF SIGN.

REVISIONS

NO.	DATE	APPR.	REMARKS

UTAH DEPARTMENT OF TRANSPORTATION
STANDARD DRAWINGS FOR ROAD AND BRIDGE CONSTRUCTION
SALT LAKE CITY, UTAH

RECOMMENDED FOR APPROVAL — JULY 03,2002 DATE

CHAIRMAN STANDARDS COMMITTEE APPROVED — JULY 03,2002 DATE

DEPUTY DIRECTOR

STANDARD DRAWING TITLE: FLASHING SCHOOL SIGN

STD DWG
SN 2

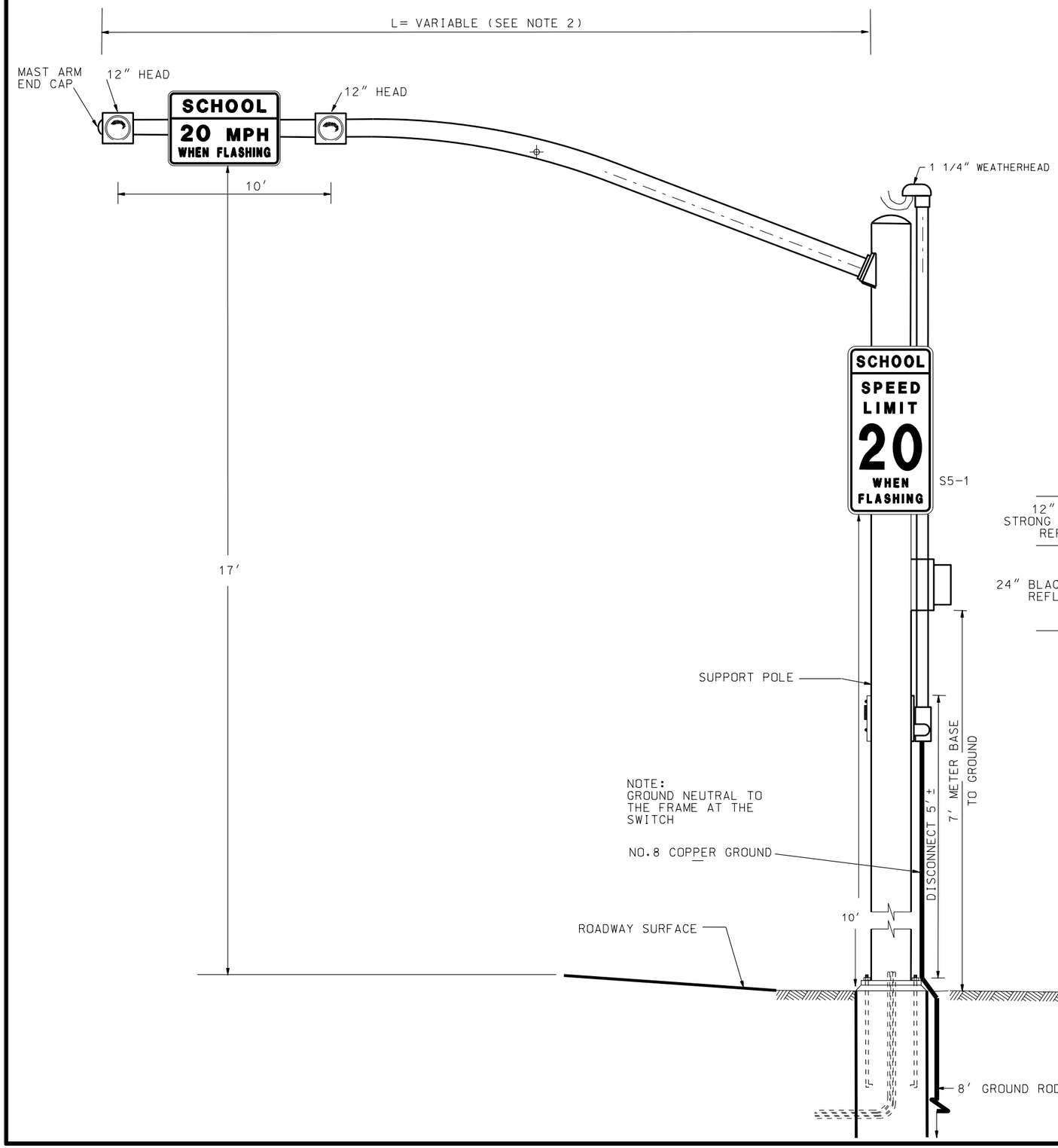

NOTES

1. POLES, ARMS & FOUNDATIONS SEE STD DWG SL 1,SL 2.
2. DESIGN ARM LENGTH INDIVIDUALLY DEPENDING ON HIGHWAY GEOMETRICS.
3. PROVIDE CLEAR ZONE PROTECTION ACCORDING TO AASHTO GUIDELINES.

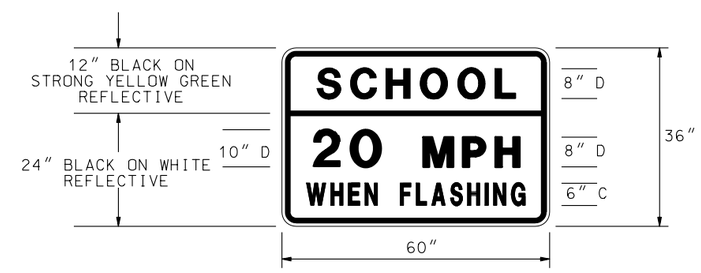

REVISIONS

NO.	DATE	APPR.	REMARKS

UTAH DEPARTMENT OF TRANSPORTATION
STANDARD DRAWINGS FOR ROAD AND BRIDGE CONSTRUCTION
SALT LAKE CITY, UTAH

RECOMMENDED FOR APPROVAL — JULY 03,2002 DATE

CHAIRMAN STANDARDS COMMITTEE APPROVED — JULY 03,2002 DATE

DEPUTY DIRECTOR

STANDARD DRAWING TITLE: OVERHEAD SCHOOL FLASHER

STD DWG
SN 3

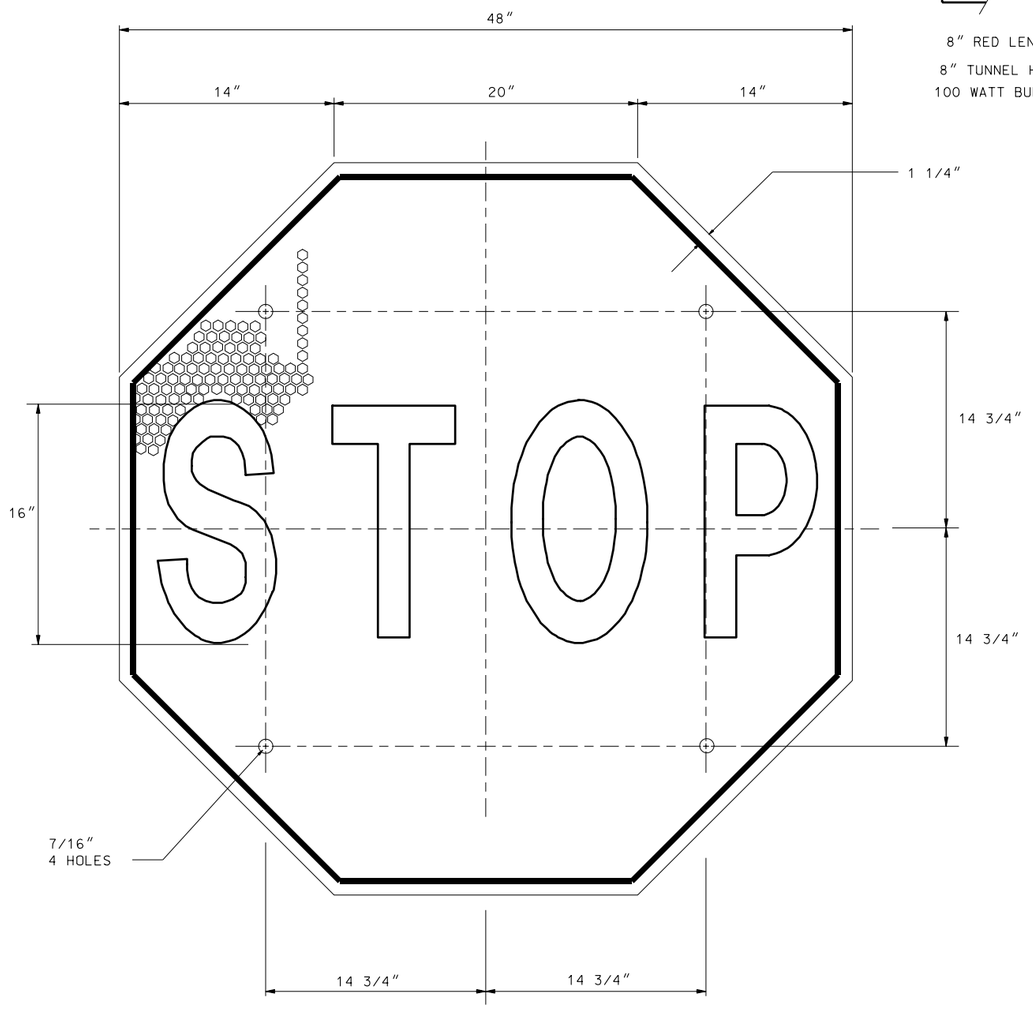

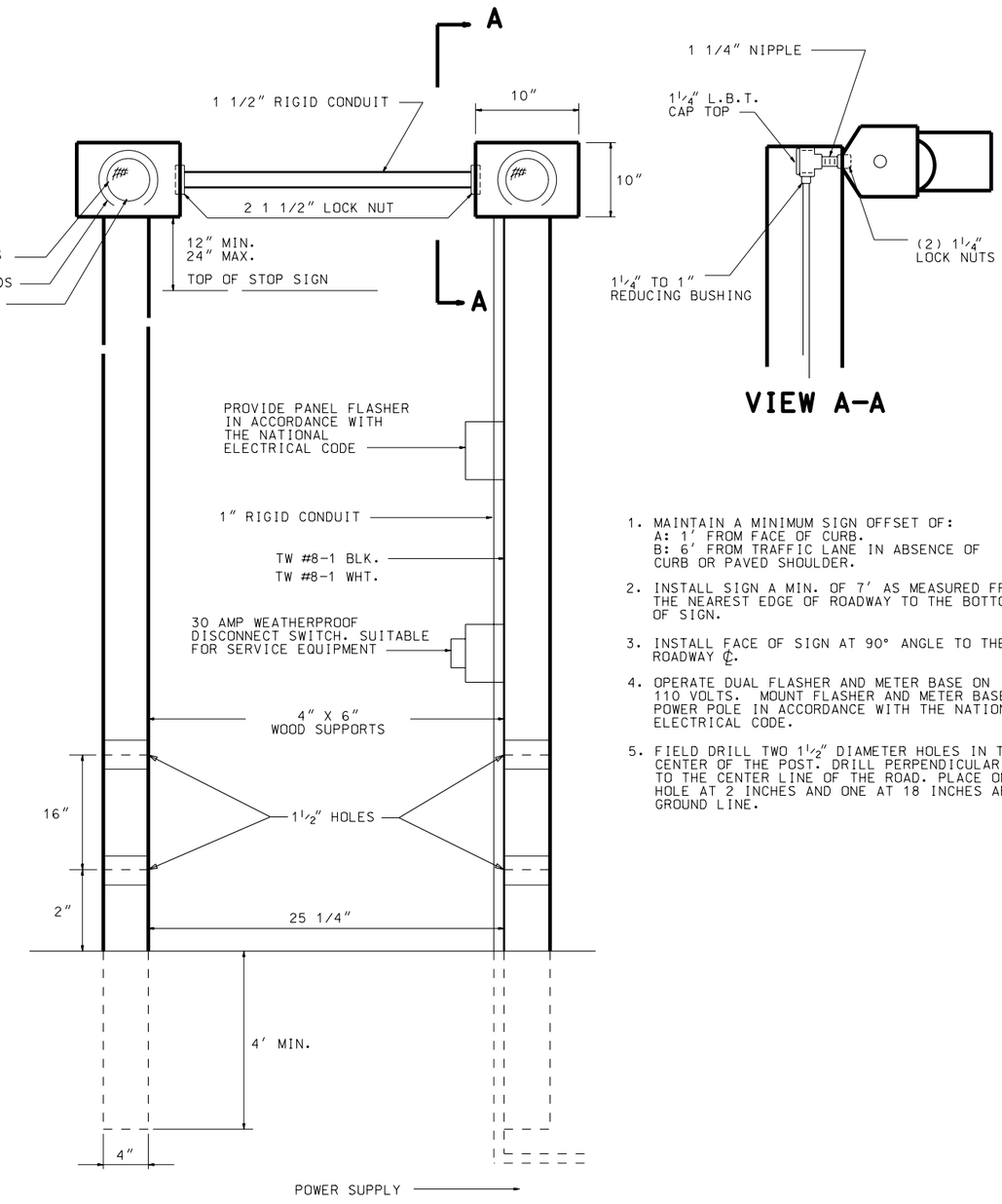

1. MAINTAIN A MINIMUM SIGN OFFSET OF:
   A: 1′ FROM FACE OF CURB.
   B: 6′ FROM TRAFFIC LANE IN ABSENCE OF CURB OR PAVED SHOULDER.
2. INSTALL SIGN A MIN. OF 7′ AS MEASURED FROM THE NEAREST EDGE OF ROADWAY TO THE BOTTOM OF SIGN.
3. INSTALL FACE OF SIGN AT 90° ANGLE TO THE ROADWAY ℄.
4. OPERATE DUAL FLASHER AND METER BASE ON 110 VOLTS. MOUNT FLASHER AND METER BASE ON POWER POLE IN ACCORDANCE WITH THE NATIONAL ELECTRICAL CODE.
5. FIELD DRILL TWO 1 1/2″ DIAMETER HOLES IN THE CENTER OF THE POST. DRILL PERPENDICULAR TO THE CENTER LINE OF THE ROAD. PLACE ONE HOLE AT 2 INCHES AND ONE AT 18 INCHES ABOVE GROUND LINE.

REVISIONS

NO.	DATE	APPR.	REMARKS

UTAH DEPARTMENT OF TRANSPORTATION
STANDARD DRAWINGS FOR ROAD AND BRIDGE CONSTRUCTION
SALT LAKE CITY, UTAH

RECOMMENDED FOR APPROVAL — JULY 03,2002 DATE

CHAIRMAN STANDARDS COMMITTEE APPROVED — JULY 03,2002 DATE

DEPUTY DIRECTOR

FLASHING STOP SIGN

STANDARD DRAWING TITLE

STD DWG
SN 4

D10-3

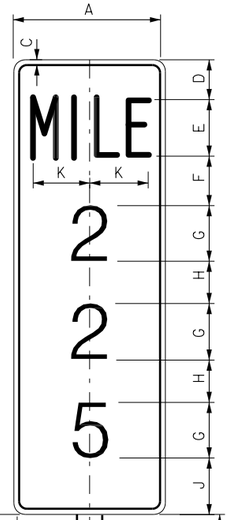

D10-2

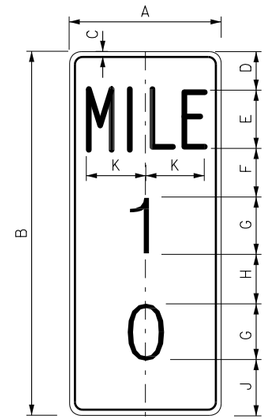

D10-1

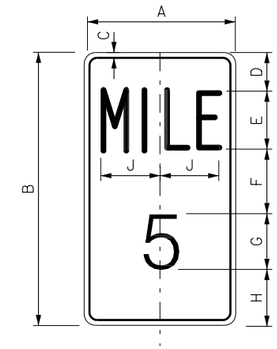

D10-3

A	B	C	D
10	30	0.38	3
12	48	0.38	2.2

E	F	G	H
4B	3	4D	2.5
5D	2.8	10D	2.8

J	K	L	
3	3.9	1.5	
2.5	4.9	1.5	

D10-2

A	B	C	D
10	24	0.38	3
12	36	0.38	3

E	F	G	H
4B	3	4D	3
5D	2.5	10D	2.5

J	K	L
3	3.9	1.5
3	4.9	1.5

D10-1

A	B	C	D
10	18	0.38	2.5
12	24	0.38	3

E	F	G	H
4B	4	4D	3.5
5D	3	10D	3

J	K
3.9	1.5
4.9	1.5

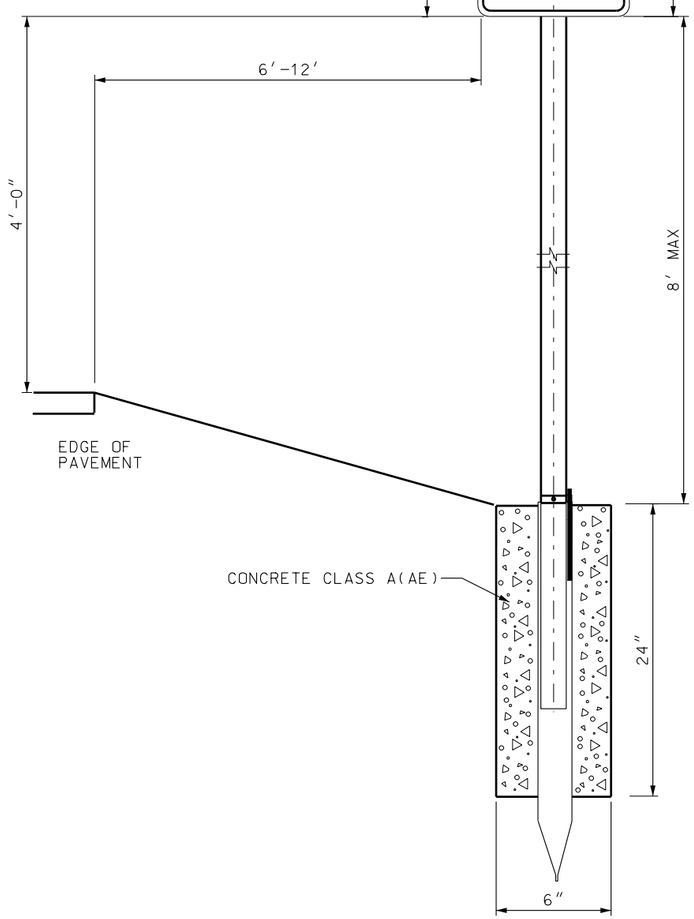

TYPICAL INSTALLATION

NOTES:

1. USE: 12″ WIDE FOR INTERSTATE
   10″ ALL OTHER HIGHWAYS.
2. REFLECTORIZED WHITE LEGEND AND BORDER ON A REFLECTORIZED GREEN BACKGROUND.
3. DO NOT EXCEED 8′ MOUNTING HEIGHT FROM BOTTOM OF SIGN TO THE GROUND WHILE MAINTAINING 4′ MINIMUM HEIGHT ABOVE PAVEMENT EDGE.
4. USE "TUBULAR STEEL SIGN POST (P2)". FASTEN PANEL WITH 5/16″x 3″ S.S. BOLT; LOCK NUT, USE 5/16″ NYLON WASHER AGAINST SIGN FACE.

REVISIONS

NO.	DATE	APPR.	REMARKS

UTAH DEPARTMENT OF TRANSPORTATION
STANDARD DRAWINGS FOR ROAD AND BRIDGE CONSTRUCTION
SALT LAKE CITY, UTAH

RECOMMENDED FOR APPROVAL — JULY 03,2002 DATE
CHAIRMAN STANDARDS COMMITTEE APPROVED — JULY 03,2002 DATE
DEPUTY DIRECTOR

STANDARD DRAWING TITLE
TYPICAL INSTALLATION FOR MILEPOST SIGNS

STD DWG
SN 5

REGULATORY, WARNING, ROUTE MARKERS

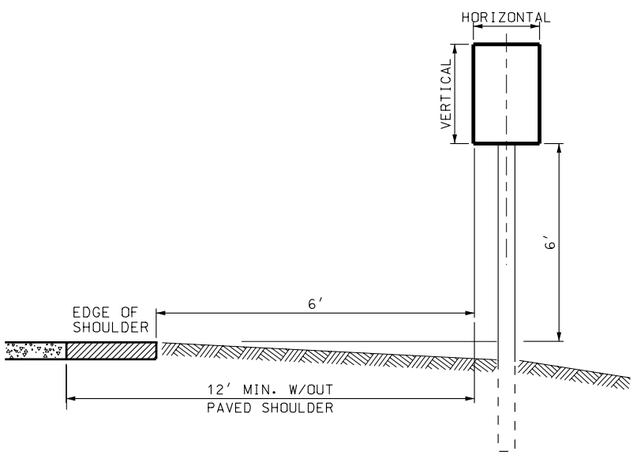

RURAL

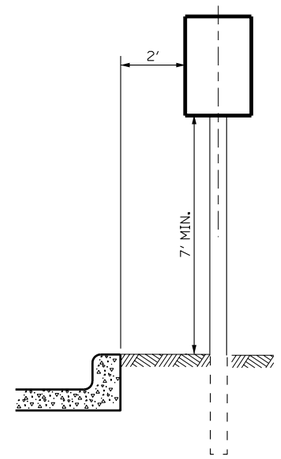

RESIDENTIAL – URBAN

SIGN INSTALLATION

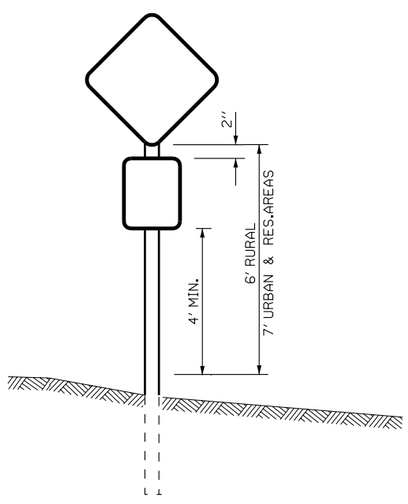

W/SUPPLEMENTAL SIGN

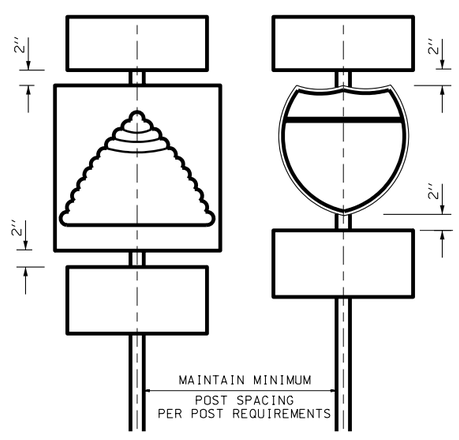

ROUTE MARKERS

GUIDE & DIRECTIONAL SIGNING

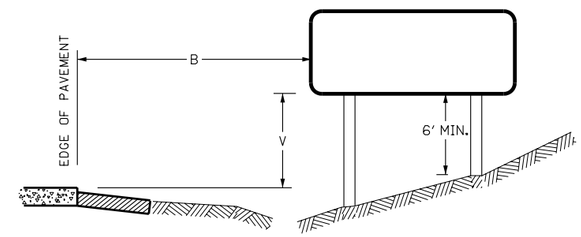

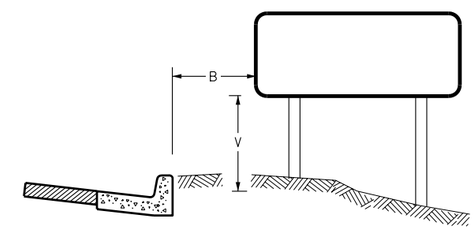

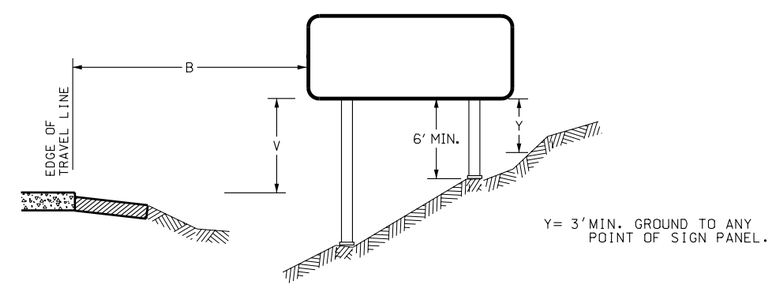

GUIDE & DIRECTIONAL SIGN PLACEMENT

(B) LATERAL PLACEMENT			(V) VERTICAL PLACEMENT		
CONVENTIONAL		INTERSTATE	INTERSTATE	CONVENTIONAL	
RURAL	URBAN			RURAL	URBAN
6' – 12' FROM EDGE OF PAVEMENT OR SHOULDER	2' MIN WITH CURB	DESIRABLE – 30' FROM TRAVEL LANE ACCEPTABLE– 12' MIN FROM EDGE OF SHOULDER	DESIRABLE – 7' ACCEPTABLE – 6'	6'	7'
	2' MIN PLUS SHOULDER		7'		
	WITHOUT CURB	2' MIN WHEN BEHIND BARRIER	7'		

REVISIONS

NO.	DATE	APPR.	REMARKS

UTAH DEPARTMENT OF TRANSPORTATION
STANDARD DRAWINGS FOR ROAD AND BRIDGE CONSTRUCTION
SALT LAKE CITY, UTAH

RECOMMENDED FOR APPROVAL — JULY 03,2002 DATE

CHAIRMAN STANDARDS COMMITTEE APPROVED — JULY 03,2002 DATE

DEPUTY DIRECTOR

PLACEMENT OF GROUND MOUNT SIGNS

STANDARD DRAWING TITLE

STD DWG
SN 7

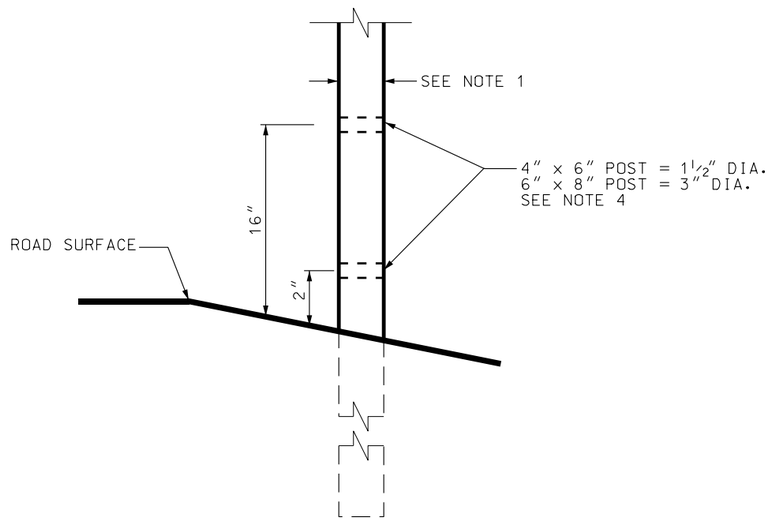

WEAKENED POST DETAIL
SEE NOTE 3

TIMBER SIGN POSTS (Nominal)

HORIZONTAL SIGN DIMENSION (inches)

VERTICAL SIGN DIMENSION (inches)	12	24	36	48	60	72	84	96	108	120	132	144
12	1 – 4x4 4	1 – 4x4 4	1 – 4x4 4	1 – 4x4 4	2 – 4x4 4	2 – 4x4 4	2 – 4x4 4	2 – 4x4 4	2 – 4x4 4	2 – 4x4 4	2 – 4x4 4	2 – 4x4 4
18	1 – 4x4 4	1 – 4x4 4	1 – 4x4 4	1– 4x6 4	2 – 4x4 4	2 – 4x4 4	2 – 4x4 4	2 – 4x6 4	2 – 4x6 4	2 – 4x6 4	2 – 4x6 4	2 – 4x6 4
24	1 – 4x4 4	1 – 4x4 4	1– 4x6 4	1– 4x6 4	2 – 4x4 4	2 – 4x6 4	2 – 4x6 4	2 – 4x6 4	2 – 4x6 4	2 – 4x6 4	2 – 4x6 4	2 – 4x6 4
30	1 – 4x4 4	1 – 4x4 4	1– 4x6 4	1– 4x6 4	2 – 4x6 4	2 – 4x6 4	2 – 4x6 4	2 – 4x6 4	2 – 4x6 4	2 – 4x6 4	3 – 4x6 4	3 – 4x6 4
36	1 – 4x4 4	1– 4x6 4	1– 4x6 4	1– 4x6 4	2 – 4x6 4	2 – 4x6 4	2 – 4x6 4	2 – 4x6 4	3 – 4x6 4	3 – 4x6 4	3 – 4x6 4	3 – 4x6 4
42	1 – 4x4 4	1– 4x6 4	1– 4x6 4	1– 4x6 4	2 – 4x6 4	2 – 4x6 4	2 – 4x6 4	3 – 4x6 4	3 – 4x6 4	3 – 4x6 4	2 – 6x8 5	2 – 6x8 5
48	1 – 4x4 4	1– 4x6 4	1– 4x6 4	2 – 4x6 4	2 – 4x6 4	2 – 4x6 4		3 – 4x6 4	3 – 4x6 4	2 – 6x8 4	2 – 6x8 5	2 – 6x8 5
54	1 – 4x4 4	1– 4x6 4	1– 6x8 5	2 – 4x6 4	2 – 4x6 4	1– 6x8 5		2 – 6x8 5	2 – 6x8 5	2 – 6x8 5	2 – 6x8 5	2 – 6x8 5
60	1– 4x6 4	1– 4x6 4	1– 6x8 5	2 – 4x6 4	1– 6x8 5	1– 6x8 5		2 – 6x8 5	2 – 6x8 5	2 – 6x8 5	2 – 6x8 5	2 – 6x8 5
66	1– 4x6 4	1– 4x6 4	1– 6x8 5	2 – 4x6 4	1– 6x8 5			2 – 6x8 5	2 – 6x8 5	2 – 6x8 5	2 – 6x8 5	
72	1– 4x6 4	1– 6x8 5	1– 6x8 5	1– 6x8 5	1– 6x8 5			2 – 6x8 5	2 – 6x8 5	2 – 6x8 5		

LEGEND 2 – 4x6 / 5 — NUMBER & SIZE (inch x inch) OF POSTS
— EMBEDMENT DEPTH IN FEET

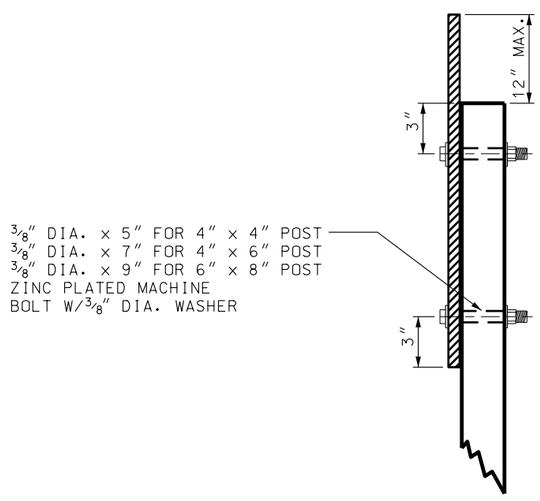

SIDE VIEW

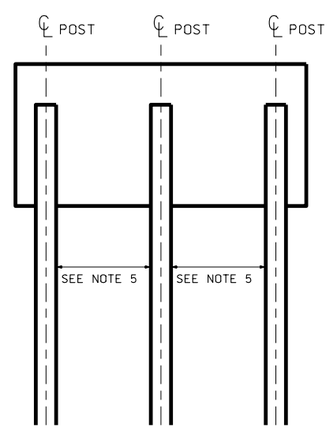

MULTIPLE POST SIGN

NOTES:

1. NARROW POST DIMENSION TO FACE TRAFFIC.
2. USE ONE 4″x 6″ POST FOR MULTIPLE SIGN INSTALLATION ON SINGLE POST, EXCLUDING ROUTE MARKERS.
3. MINIMUM DEPTH OF EMBEDMENT: 4′ UNLESS 5′ IS SHOWN.
4. FIELD DRILL TWO HOLES IN THE CENTER OF THE POST. DRILL PERPENDICULAR TO THE CENTER LINE OF THE ROAD.
5. MINIMUM SPACING BETWEEN POST:

	POST SIZE	SPACING
FOR 3 OR MORE POSTS	4″ x 4″	= 4′
FOR 3 OR MORE POSTS	4″ x 6″	= 4′
FOR 2 OR MORE POSTS	6″ x 8″	= 7′

REVISIONS

NO.	DATE	APPR.	REMARKS

UTAH DEPARTMENT OF TRANSPORTATION
STANDARD DRAWINGS FOR ROAD AND BRIDGE CONSTRUCTION
SALT LAKE CITY, UTAH

RECOMMENDED FOR APPROVAL — JULY 03,2002 DATE
CHAIRMAN STANDARDS COMMITTEE APPROVED — JULY 03,2002 DATE
DEPUTY DIRECTOR

STANDARD DRAWING TITLE
GROUND MOUNTED
TIMBER SIGN POST (P1)

STD DWG
SN 8

TUBULAR STEEL POST (P2)

(SOCKET SYSTEM)
(SINGLE OR DOUBLE POST)

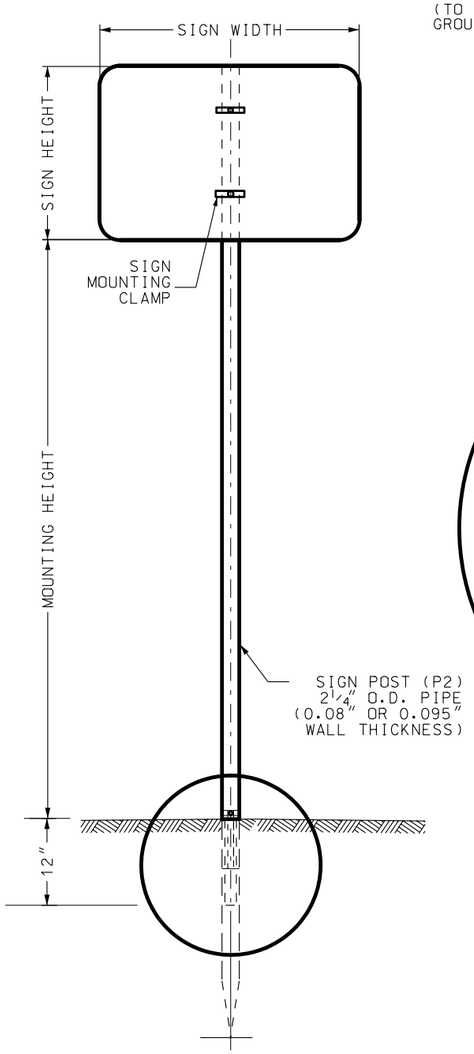

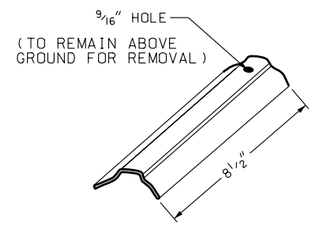

WEDGE

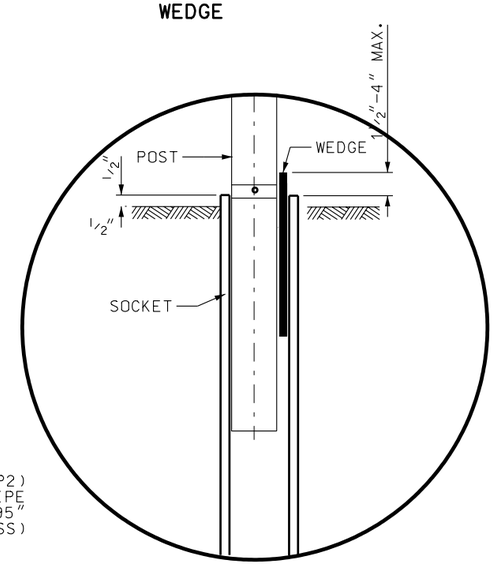

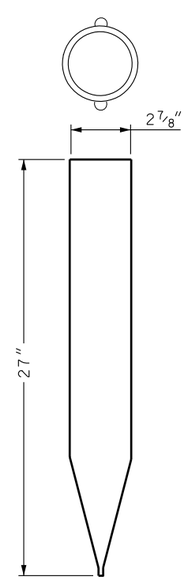

TUBULAR SOCKET

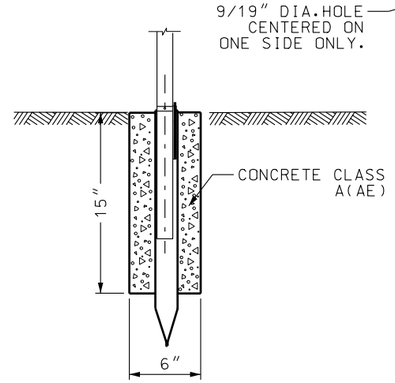

CONCRETE FOUNDATION

SEE NOTE 1

WEDGE

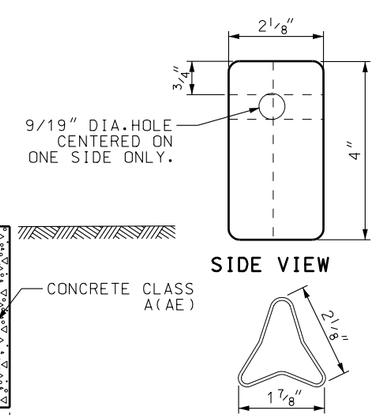

SIDE VIEW

TOP VIEW

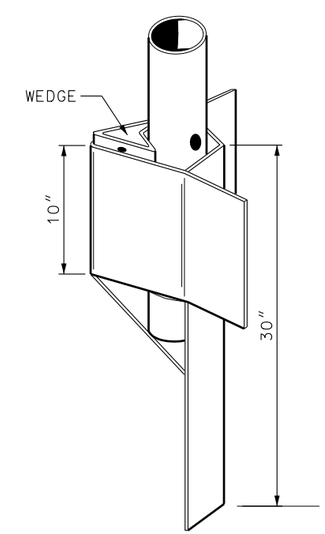

TRANGULAR STEEL SIGN POST ANCHOR

SEE NOTE 1

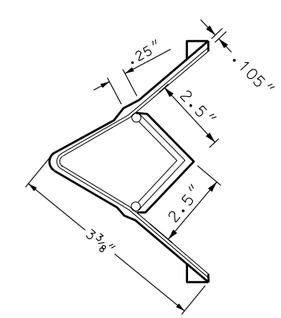

TOP VIEW

TUBULAR STEEL SIGN POSTS

HORIZONTAL SIGN DIMENSION (inch) / VERTICAL SIGN DIMENSION (inch)

	12	24	36	48	60	72	84	96	108	120	132	144
12	1 P2	1 P2	1 P2	2 P2	2 P2	2 P2	2 P2	2 P2	2 P2	2 P2	2 P2	2 P2
18	1 P2	1 P2	1 P2	2 P2	2 P2	2 P2	2 P2	2 P2	2 P2	2 P2	2 P2	2 P2
24	1 P2	1 P2	1 P2	2 P2	2 P2	2 P2	2 P2	2 P2	2 P2	2 P2	1 P4	1 P4
30	1 P2	1 P2	1 P2	2 P2	2 P2	2 P2	2 P2	2 P2	1 P4	1 P4	1 P4	1 P4
36	1 P2	1 P2	1 P2	2 P2	2 P2	2 P2	1 P4	1 P4	1 P4	1 P4	1 P4	1 P4
42	1 P2	1 P2	1 P2	2 P2	2 P2	1 P4	1 P4	1 P4	2 P4	2 P4	2 P4	2 P4
48	1 P2	1 P2	2 P2	2 P2	2 P2	1 P4	1 P4	2 P4	2 P4	2 P4	2 P4	2 P4
54	1 P2	1 P2	2 P2	2 P2	1 P4	1 P4	2 P4	2 P4	2 P4	2 P4	2 P4	2 P4
60	1 P2	1 P2	2 P2	2 P2	1 P4	1 P4	2 P4	2 P4	2 P4	2 P4	2 P4	2 P4
66	1 P4	1 P4	1 P4	1 P4	1 P4	2 P4	2 P4	2 P4	2 P4	2 P4		
72	1 P4	1 P4	1 P4	1 P4	1 P4	2 P4	2 P4	2 P4	2 P4	2 P4		

LEGEND: 1 — NUMBER OF POSTS; P4 — TYPE OF POST

P2 = 2⅜"x 0.80 (SOCKET SYM.)
P4 = 2½"x SCH. 80 (SLIPBASE)
REFER TO STD DWG SN 11

NOTES:

1. FOR SOFT SOIL CONDITIONS USE TRIANGULAR STEEL SIGN POST ANCHOR OR PLACE TUBULAR SOCKET IN A 6 inch DIAMETER BY 15 inch DEEP CONCRETE FOUNDATION.
2. YELLOW POSTS MAYBE USED FOR LEFT SIDE (MEDIAN) SIGN INSTALLATIONS AND FOR SIGN LOCATIONS HAVING A HIGH PROBABLY OF IMPACTS AS DETERMINED BY THE REGION TRAFFIC ENGINEER.
3. P4 SIGN POST MAY BE USED FOR MOST SMALL AREA SIGN. CALCULATE POST NEEDS AT 30 square feet OF SIGN PER POST. SEE STANDARD FOR POST SPACING.

POST NOTES:

POSTS PRE-PUNCHED WITH ⅜" HOLES. MOUNT SIGN DIRECTLY TO POST OR USE AN APPROVED MOUNTING CLAMP. SPACING OF HOLES FROM TOP IN INCHES ARE AS FOLLOWS:

1",3".10",16",21",23",24",27",33",37",39" AND 45"

NO.	DATE	APPR.	REMARKS

REVISIONS

UTAH DEPARTMENT OF TRANSPORTATION
STANDARD DRAWINGS FOR ROAD AND BRIDGE CONSTRUCTION
SALT LAKE CITY, UTAH

RECOMMENDED FOR APPROVAL — JULY 03,2002 DATE
CHAIRMAN STANDARDS COMMITTEE APPROVED — JULY 03,2002 DATE
DEPUTY DIRECTOR

STANDARD DRAWING TITLE: GROUND MOUNTED TUBULAR STEEL SIGN POST (P2)

STD DWG SN 9

SIGN INSTALLATION

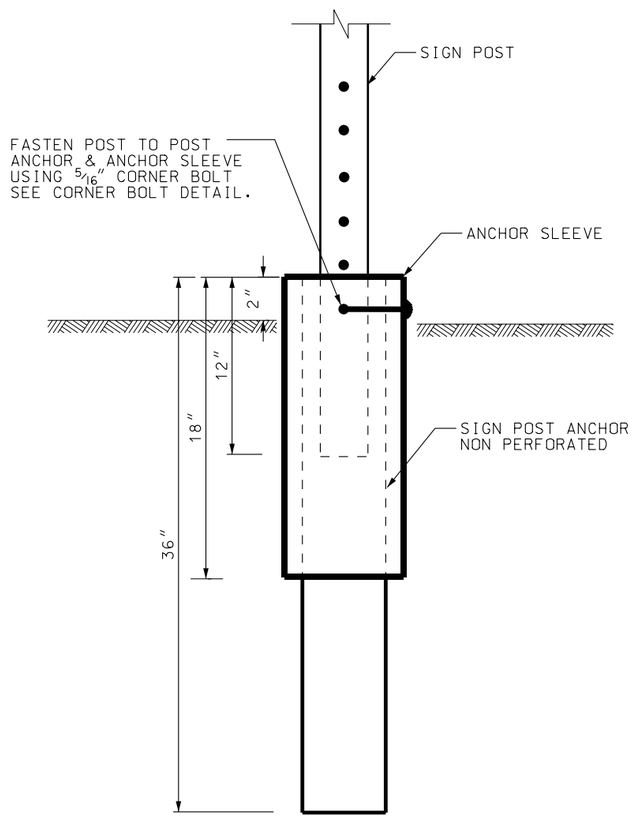

TYPICAL INSTALLATION ,
HIGH IMPACT AREAS
(TWO PIECE BREAKAWAY ANCHOR)

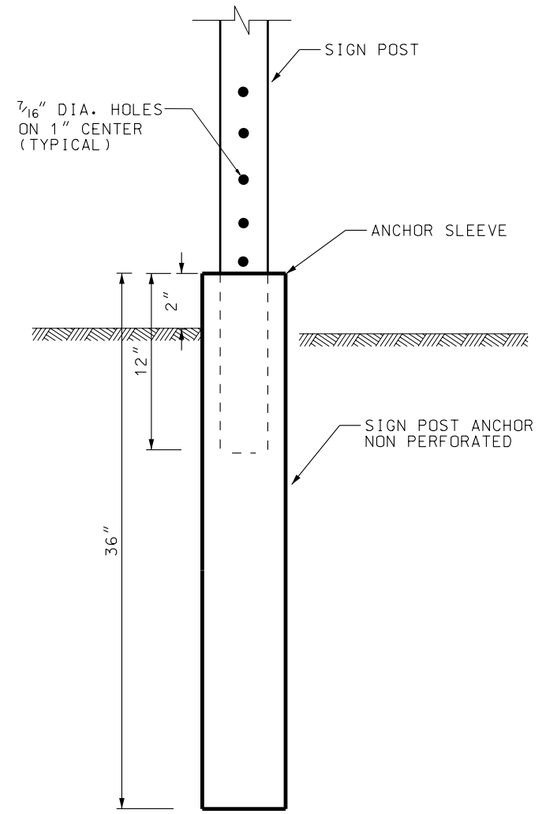

TYPICAL INSTALLATION
(W/ONE PIECE BREAKAWAY ANCHOR)

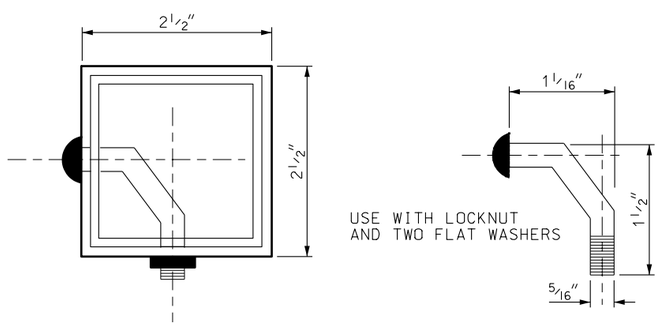

CORNER BOLT DETAIL

SQUARE STEEL SIGN POSTS

VERTICAL SIGN DIMENSION (inches) \ HORIZONTAL SIGN DIMENSION (inches)	12	24	36	48	60	72	84	96	108	120	132	144
12	1 T1	1 T1	1 T1	1 T1	2 T1	2 T1	2 T1	2 T1	2 T1	2 T1	2 T1	2 T1
18	1 T1	1 T1	1 T1	1 T1	2 T1	2 T1	2 T1	2 T1	2 T1	2 T1	2 T1	2 T2
24	1 T1	1 T1	1 T1	1 T1	2 T1	2 T1	2 T1	2 T1	2 T2	2 T2	2 T2	2 T2
30	1 T1	1 T1	1 T2	2 T1	2 T1	2 T1	2 T2	2 T2	2 T2	2 T2	2 T2	
36	1 T1	1 T1	1 T2	2 T1	2 T1	2 T2	2 T2	2 T2	2 T2			
42	1 T1	1 T2	1 T2	2 T1	2 T2	2 T2	2 T2					
48	1 T1	1 T2	2 T1	2 T2	2 T2	2 T2						
54	1 T1	1 T2	2 T2	2 T2	2 T2							
60	1 T1	1 T2	2 T2	2 T2								
66	1 T1	1 T2	2 T2									
72	1 T1	1 T2	2 T2									

T1 = 2" 12 GAUGE W/2 1/4" ANCHOR, 2 1/2" SLEEVE
T2 = 2 1/2" 12 GAUGE W/3/4" ANCHOR, 3" SLEEVE

1. FOR SOFT SOIL USE TRIANGULAR STEEL SIGN POST ANCHOR: REFER TO STD DWG SN 12

REVISIONS

NO.	DATE	APPR.	REMARKS

UTAH DEPARTMENT OF TRANSPORTATION
STANDARD DRAWINGS FOR ROAD AND BRIDGE CONSTRUCTION
SALT LAKE CITY, UTAH

RECOMMENDED FOR APPROVAL — JULY 03,2002 DATE
CHAIRMAN STANDARDS COMMITTEE APPROVED — JULY 03,2002 DATE
DEPUTY DIRECTOR

GROUND MOUNTED SQUARE STEEL SIGN POST (P3)
STANDARD DRAWING TITLE

STD DWG
SN 10

TUBULAR STEEL POSTS (P4)
(WITH SLIPBASE)
(SINGLE OR DOUBLE POST)

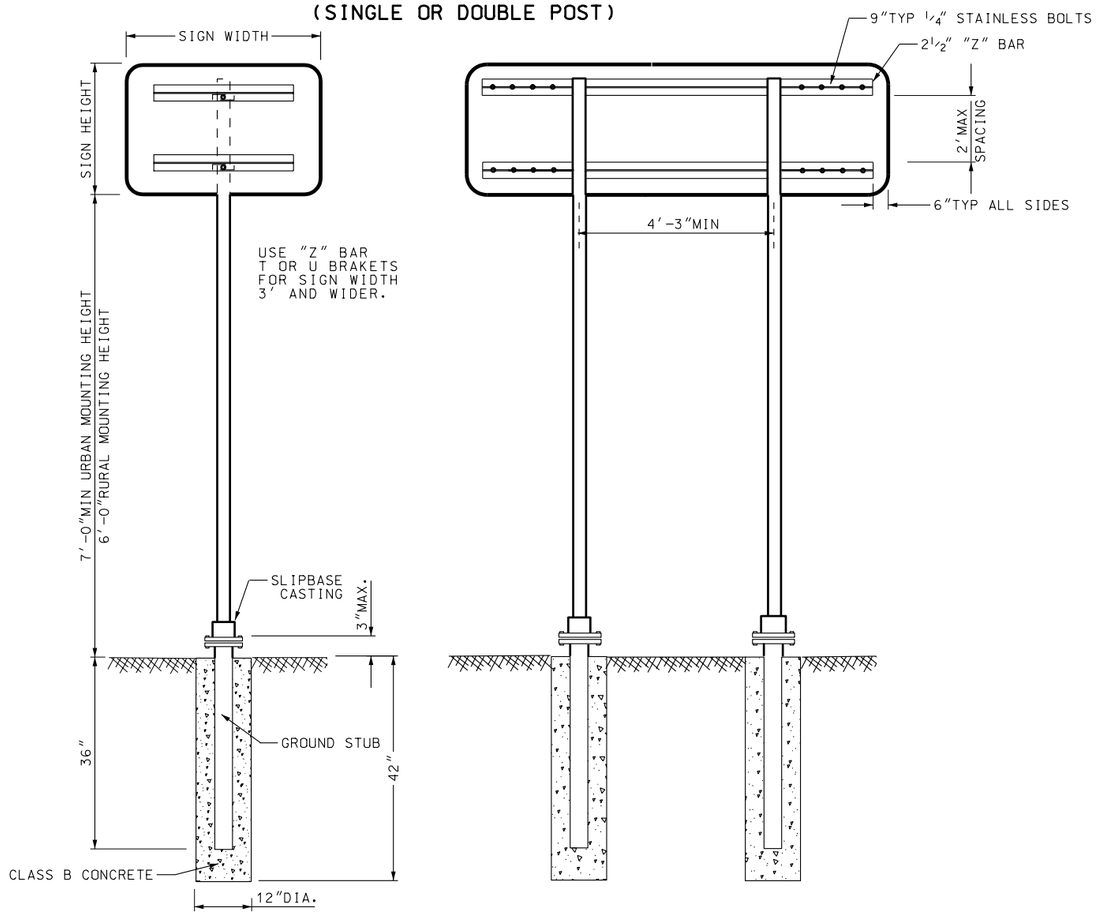

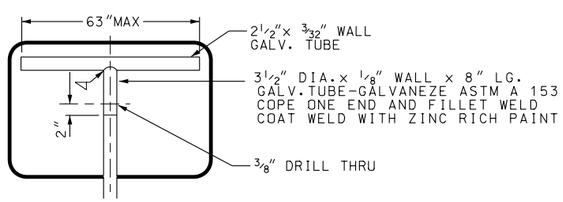

T BRACKET

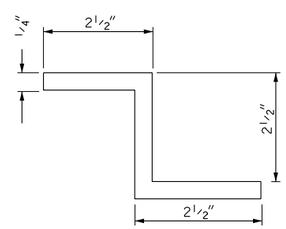

"Z" BAR - ASTM B 221-6061T6

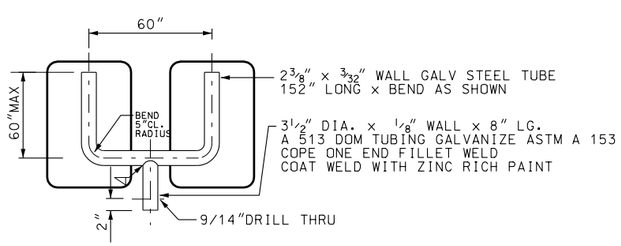

U BRACKET

EXTEND T AND U BRACKETS TO 2" SHORT OF THE EDGE OF THE PANEL.

STANDARD PIPE SIZE	A	B	C	D	E	F	G	K	L	R1	R2
2	3 3/4	2 3/4	1 1/2	1 1/8	1/2	3/16	1	2 11/16	1 7/32	1 1/4	1 3/16
2 1/2	4 1/4	3 1/4	2	1 1/4	1/2	1/4	1	3 3/16	1 15/32	1 1/2	1 7/16

DIMENSIONS FOR MOUNTING CLAMP

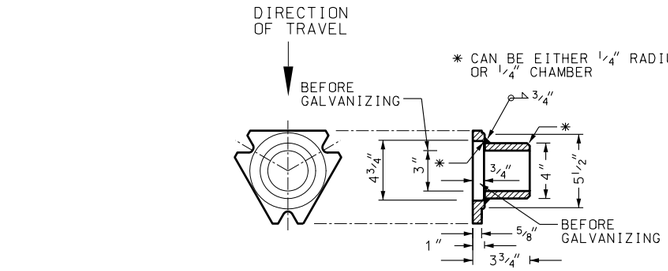

SLIPBASE CASTING

U-BOLT

U-BOLT TO BE MADE IN ACCORDANCE WITH STANDARD MANUFACTURING PROCEDURE. 9/32" OR 5/16" DIAMETER STOCK IS PERMISSIBLE. AMERICAN STANDARD REGULAR SEMI-FINISHED HEX NUTS AND LOCKWASHERS.

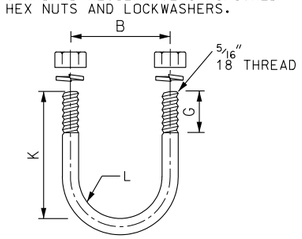

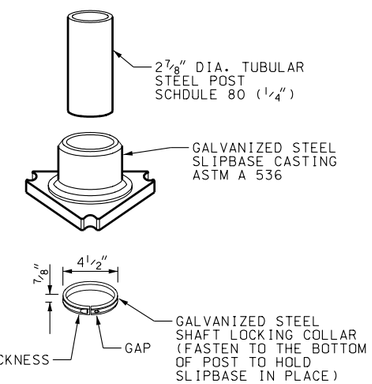

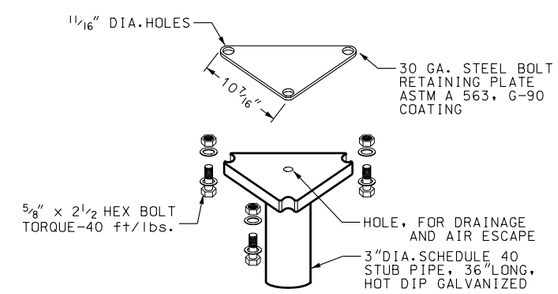

TYPICAL ASSEMBLY

PIPE CLAMP CASTING

PIPE CLAMP CASTING: ASTM B26 OR B108 ALUMINUM ALLOY A444.00-T4 OR 356.0-F. SIGN MOUNTING CLAMP PARTS NOT MADE FROM ALUMINUM: GALVANIZED IN CONFORMANCE WITH ASTM A 153 OR STAINLESS STEEL.

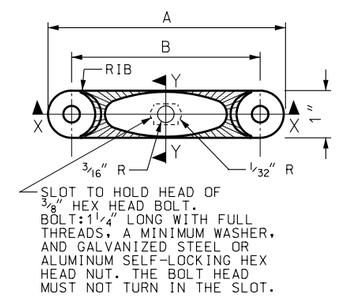

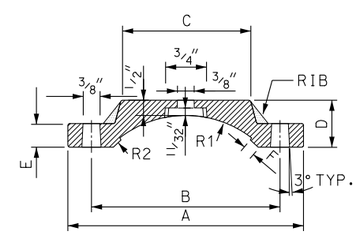

SECTION X-X

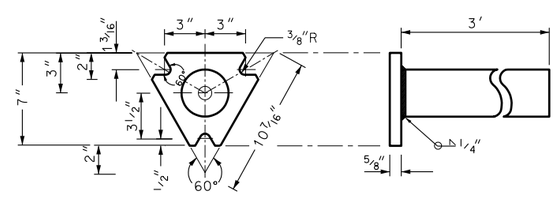

SLIPBASE STUB POST

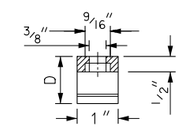

SECTION Y-Y

MOUNTING CLAMP FOR SOCKET OR SLIPBASE

NO.	DATE	APPR.	REMARKS

REVISIONS

UTAH DEPARTMENT OF TRANSPORTATION
STANDARD DRAWINGS FOR ROAD AND BRIDGE CONSTRUCTION
SALT LAKE CITY, UTAH

RECOMMENDED FOR APPROVAL — JULY 03,2002 DATE

CHAIRMAN STANDARDS COMMITTEE APPROVED — JULY 03,2002 DATE

DEPUTY DIRECTOR

SLIPBASE GROUND MOUNTED TUBULAR STEEL SIGN POST (P4)

STANDARD DRAWING TITLE

STD DWG
SN 11

HORIZONTAL SIGN DIMENSION (W)

VERTICAL SIGN DIMENSION (V)	ONE POST PER SIGN					TWO POSTS PER SIGN											THREE POSTS PER SIGN							
	1'-0"	2'-0"	3'-0"	4'-0"	5'-0"	6'-0"	7'-0"	8'-0"	9'-0"	10'-0"	11'-0"	12'-0"	13'-0"	14'-0"	15'-0"	16'-0"	17'-0"	18'-0"	19'-0"	20'-0"	21'-0"	22'-0"	23'-0"	24'-0"
1'-0"	3"Ø 3'-0"	3"Ø 3'-0"	3"Ø 3'-0"	3"Ø 3'-0"	3"Ø 3'-0"	S3X5.7 3'-0"	S3X5.7 3'-0"	S3X5.7 3'-0"	S3X5.7 3'-0"	S3X5.7 3'-0"	S3X5.7 3'-0"	S3X5.7 3'-0"	S3X5.7 3'-0"	S3X5.7 3'-0"	S3X5.7 3'-0"	S3X5.7 3'-0"	S3X5.7 3'-0"	S3X5.7 3'-0"	S3X5.7 3'-0"	S3X5.7 3'-0"	S3X5.7 3'-0"	S3X5.7 3'-0"	S3X5.7 3'-0"	S3X5.7 3'-0"
1'-6"	3"Ø 3'-0"	3"Ø 3'-0"	3"Ø 3'-0"	3"Ø 3'-0"	3"Ø 3'-0"	S3X5.7 3'-0"	S3X5.7 3'-0"	S3X5.7 3'-0"	S3X5.7 3'-0"	S3X5.7 3'-0"	S3X5.7 3'-0"	S3X5.7 3'-0"	S3X5.7 3'-0"	S3X5.7 3'-0"	S4X9.5 3'-0"	S4X9.5 3'-0"	S3X5.7 3'-0"	S3X5.7 3'-0"	S3X5.7 3'-0"	S3X5.7 3'-0"	S4X9.5 3'-0"	S4X9.5 3'-0"	S4X9.5 3'-0"	S4X9.5 3'-0"
2'-0"	3"Ø 3'-0"	3"Ø 3'-0"	3"Ø 3'-0"	3"Ø 3'-0"	3"Ø 3'-0"	S3X5.7 3'-0"	S3X5.7 3'-0"	S3X5.7 3'-0"	S3X5.7 3'-0"	S3X5.7 3'-0"	S4X9.5 3'-0"	S4X9.5 3'-0"	S4X9.5 3'-0"	S4X9.5 3'-0"	S4X9.5 3'-0"	S4X9.5 3'-0"	S4X9.5 3'-0"	S4X9.5 3'-0"	S4X9.5 3'-0"	S4X9.5 3'-0"	S4X9.5 3'-0"	S4X9.5 3'-0"	S4X9.5 3'-0"	S4X9.5 3'-0"
2'-6"	3"Ø/ 3'-0"	3"Ø 3'-0"	3"Ø 3'-0"	3"Ø 3'-0"	3"Ø 3'-0"	S3X5.7 3'-0"	S3X5.7 3'-0"	S3X5.7 3'-0"	S4X9.5 3'-0"	S4X9.5 3'-0"	S4X9.5 3'-0"	S4X9.5 3'-0"	S4X9.5 3'-0"	S4X9.5 3'-0"	S4X9.5 3'-0"	S4X9.5 3'-0"	S4X9.5 3'-0"	S4X9.5 3'-0"	S4X9.5 3'-0"	S4X9.5 3'-0"	S4X9.5 3'-0"	S4X9.5 3'-0"	S6X12.5 3'-0"	S6X12.5 3'-0"
3'-0"	3"Ø 3'-0"	3"Ø 3'-0"	3"Ø 3'-0"	3"Ø 3'-0"	4"Ø 3'-0"	S3X5.7 3'-0"	S3X5.7 3'-0"	S4X9.5 3'-0"	S4X9.5 3'-0"	S4X9.5 3'-0"	S4X9.5 3'-0"	S4X9.5 3'-0"	S4X9.5 3'-0"	S6X12.5 3'-6"	S6X12.5 3'-0"	S6X12.5 3'-0"	S4X9.5 3'-0"	S4X9.5 3'-0"	S4X9.5 3'-0"	S6X12.5 3'-6"	S6X12.5 3'-6"	S6X12.5 3'-6"	S6X12.5 3'-6"	S6X12.5 3'-0"
4'-0"	3"Ø 3'-0"	3"Ø 3'-0"	3"Ø 3'-6"	4"Ø 3'-6"	4"Ø 3'-6"	S4X9.5 3'-6"	S4X9.5 3'-6"	S4X9.5 3'-6"	S4X9.5 4'-0"	S4X9.5 3'-6"	S6X12.5 3'-6"	S6X12.5 3'-6"	S6X12.5 3'-0"	S6X12.5 3'-6"	S6X12.5 3'-6"	S6X12.5 3'-6"	S6X12.5 3'-6"	S6X12.5 3'-6"	S6X12.5 3'-0"	S6X12.5 3'-6"	S6X12.5 3'-6"	S6X12.5 3'-6"	S6X12.5 3'-6"	S6X12.5 3'-6"
5'-0"	3"Ø 3'-0"	3"Ø 3'-0"	4"Ø 3'-6"	4"Ø 3'-6"	5"Ø 3'-6"	S4X9.5 3'-6"	S4X9.5 4'-0"	S4X9.5 4'-0"	S6X12.5 4'-6"	S6X12.5 4'-0"	S6X12.5 3'-0"	S6X12.5 3'-6"	S6X12.5 3'-6"	S6X12.5 3'-6"	S6X12.5 4'-0"	S6X12.5 4'-0"	S6X12.5 3'-6"	S6X12.5 3'-6"	S6X12.5 3'-6"	S6X12.5 3'-6"	S6X12.5 4'-0"	S6X12.5 4'-0"	S6X12.5 4'-0"	S6X17.5 4'-0"
6'-0"	3"Ø 3'-0"	4"Ø 3'-0"	4"Ø 3'-0"	5"Ø 3'-0"	5"Ø 3'-0"	S4X9.5 4'-0"	S6X12.5 4'-0"	S6X12.5 4'-6"	S6X12.5 3'-0"	S6X12.5 3'-6"	S6X12.5 3'-6"	S6X12.5 4'-0"	S6X12.5 4'-0"	S6X17.5 4'-0"	S6X17.5 4'-6"	S8X18.4 4'-6"	S6X12.5 3'-6"	S6X12.5 4'-0"	S6X12.5 4'-0"	S6X17.5 4'-0"	S6X17.5 4'-0"	S6X17.5 4'-6"	S8X18.4 4'-6"	S8X18.4 4'-6"
7'-0"	3"Ø 3'-0"	4"Ø 3'-0"	4"Ø 3'-0"	5"Ø 3'-0"	5"Ø 3'-6"	S6X12.5 4'-0"	S6X12.5 3'-0"	S6X12.5 3'-6"	S6X12.5 3'-6"	S6X12.5 3'-6"	S6X12.5 4'-0"	S6X17.5 4'-0"	S6X17.5 4'-6"	S8X18.4 4'-6"	S8X18.4 4'-6"	S8X18.4 5'-0"	S6X17.5 4'-0"	S6X17.5 4'-0"	S6X17.5 4'-6"	S8X18.4 4'-6"	S8X18.4 4'-6"	S8X18.4 5'-0"	S8X18.4 5'-0"	S8X18.4 5'-0"
8'-0"	3"Ø 3'-0"	4"Ø 3'-0"	5"Ø 3'-0"	5"Ø 3'-6"	6"Ø 4'-0"	S6X12.5 3'-0"	S6X12.5 3'-6"	S6X12.5 3'-6"	S6X12.5 4'-0"	S6X12.5 4'-0"	S6X17.5 4'-6"	S8X18.4 4'-6"	S8X18.4 4'-6"	S8X18.4 5'-0"	S8X18.4 5'-0"	S8X18.4 5'-6"	S8X18.4 4'-6"	S8X18.4 4'-6"	S8X18.4 4'-6"	S8X18.4 5'-0"	S8X18.4 5'-0"	S8X18.4 5'-0"	S8X18.4 5'-6"	S8X18.4 5'-6"
9'-0"	3"Ø 3'-0"	4"Ø 3'-0"	5"Ø 3'-6"	6"Ø 4'-0"	6"Ø 4'-0"	S6X12.5 3'-6"	S6X12.5 3'-6"	S6X12.5 4'-0"	S6X17.5 4'-0"	S6X17.5 4'-6"	S8X18.4 4'-6"	S8X18.4 5'-0"	S8X18.4 5'-0"	S8X18.4 5'-6"	S8X18.4 5'-6"	S8X18.4 5'-6"	S8X18.4 5'-0"	S8X18.4 5'-0"	S8X18.4 5'-0"	S8X18.4 5'-0"	S8X18.4 5'-6"	S8X18.4 5'-6"	W10X19.0 5'-6"	W10X19.0 6'-0"
10'-0"	3"Ø 3'-0"	5"Ø 3'-0"	5"Ø 3'-6"	6"Ø 4'-0"	6"Ø 4'-6"	S6X12.5 3'-6"	S6X12.5 4'-0"	S6X17.5 4'-6"	S6X17.5 4'-6"	S8X18.4 5'-0"	S8X18.4 5'-0"	S8X18.4 5'-6"	S8X18.4 5'-6"	W8X18.4 6'-0"	W10X19.0 6'-0"	W10X19.0 6'-6"	S8X18.4 5'-6"	S8X18.4 5'-6"	S8X18.4 6'-0"	S8X18.4 6'-0"	W10X19.0 6'-0"	W10X19.0 6'-6"	W10X19.0 6'-6"	W10X19.0 6'-6"
11'-0"	4"Ø 3'-0"	5"Ø 3'-0"	6"Ø 3'-6"	6"Ø 4'-6"	8"Ø 5'-0"	S6X12.5 4'-0"	S6X17.5 4'-6"	S6X17.5 4'-6"	S8X18.4 5'-0"	S8X18.4 5'-0"	S8X18.4 5'-6"	S8X18.4 5'-6"	W10X19.0 6'-0"	W10X19.0 6'-0"	W10X19.0 6'-6"	W10X19.0 7'-0"	S8X18.4 5'-6"	S8X18.4 5'-6"	W10X19.0 6'-0"	W10X19.0 6'-0"	W10X19.0 6'-6"	W10X19.0 6'-6"	W10X19.0 7'-0"	W10X22.0 7'-0"
12'-0"	4"Ø 3'-0"	5"Ø 3'-0"	6"Ø 4'-0"	6"Ø 4'-6"	8"Ø 5'-0"	S6X12.5 4'-0"	S6X17.5 4'-6"	S6X18.4 4'-6"	S8X18.4 5'-0"	S8X18.4 5'-0"	S8X18.4 5'-6"	W10X19.0 6'-0"	W10X19.0 6'-0"	W10X19.0 6'-6"	W10X22.0 6'-6"	W10X22.0 7'-0"	W10X19.0 5'-6"	W10X19.0 6'-0"	W10X19.0 6'-0"	W10X19.0 6'-6"	W10X19.0 6'-6"	W10X22.0 6'-6"	W10X22.0 7'-0"	W10X22.0 7'-0"
13'-0"	4"Ø 3'-0"	5"Ø 3'-6"	6"Ø 4'-0"	8"Ø 5'-0"	8"Ø 5'-6"	S6X17.5 4'-0"	S8X18.4 4'-6"	S8X18.4 5'-0"	S8X18.4 5'-0"	S8X18.4 5'-6"	W10X19.0 6'-0"	W10X19.0 6'-0"	W10X19.0 6'-6"	W10X22.0 6'-6"	W10X22.0 7'-0"	W10X22.0 7'-0"	W10X19.0 6'-0"	W10X19.0 6'-0"	W10X19.0 6'-6"	W10X22.0 6'-6"	W10X22.0 7'-0"	W10X22.0 7'-0"	W10X22.0 7'-0"	W10X22.0 7'-6"
14'-0"	4"Ø 3'-0"	5"Ø 3'-6"	6"Ø 4'-6"	8"Ø 5'-0"	8"Ø 5'-6"	S6X17.5 4'-6"	S8X18.4 5'-0"	S8X18.4 5'-0"	S8X18.4 5'-6"	W10X19.0 6'-0"	W10X19.0 6'-0"	W10X19.0 6'-6"	W10X22.0 6'-6"	W10X22.0 7'-0"	W10X26.0 7'-6"	W10X26.0 7'-6"	W10X19.0 6'-6"	W10X22.0 6'-6"	W10X22.0 7'-0"	W10X22.0 7'-0"	W10X22.0 7'-0"	W10X26.0 7'-6"	W10X26.0 7'-6"	W10X30.0 8'-0"
15'-0"	4"Ø 3'-0"	6"Ø 3'-6"	6"Ø 4'-6"	8"Ø 5'-6"	8"Ø 6'-0"	S8X18.4 4'-6"	S8X18.4 5'-0"	S8X18.4 5'-6"	S8X18.4 4'-6"	W10X19.0 6'-0"	W10X19.0 6'-6"	W10X22.0 6'-6"	W10X22.0 7'-0"	W10X26.0 7'-6"	W10X30.0 7'-6"	W10X30.0 8'-0"	W10X22.0 6'-6"	W10X22.0 7'-0"	W10X22.0 7'-0"	W10X26.0 7'-6"	W10X26.0 7'-6"	W10X26.0 7'-6"	W10X30.0 8'-0"	W10X30.0 8'-0"
16'-0"	4"Ø 3'-0"	6"Ø 4'-0"	8"Ø 4'-6"	8"Ø 5'-6"	8"Ø 6'-0"	S8X18.4 5'-0"	S8X18.4 5'-0"	S8X18.4 5'-6"	W10X19.0 6'-0"	W10X19.0 6'-6"	W10X22.0 6'-6"	W10X22.0 7'-0"	W10X26.0 7'-6"	W10X30.0 7'-6"	W10X30.0 8'-0"	W10X30.0 8'-6"	W10X22.0 7'-0"	W10X22.0 7'-0"	W10X26.0 7'-6"	W10X26.0 7'-6"	W10X30.0 8'-0"	W10X30.0 8'-0"	W10X30.0 8'-6"	W10X30.0 8'-6"

USE 10' WIDTH IF SIZE FALLS IN THIS AREA

WIDTH W	SPACING FOR POSTS
1'- 5'	ONE POST
6'	1'* 4'* 1'
7'	1'* 5'* 1'
8'	1'* 6'* 1'
9'	1'* 7'* 1'
10'	1'* 8'* 1'
11'	1.5'* 8'* 1.5'
12'	2'* 8'* 2'
13'	2.5'* 8'* 2.5'
14'	3'* 8'* 3'
15'	3.5'* 8'* 3.5'
16'	4'* 8'* 4'
17'	1'* 7.5'* 7.5' * 1'
18'	1'* 8'* 8' * 1'
19'	1.5'* 8'* 8' * 1.5'
20'	2'* 8'* 8' * 2'
21'	2.5'* 8'* 8' * 2.5'
22'	3'* 8'* 8' * 3'
23'	3.5'* 8'* 8' * 3.5'
24'	4'* 8'* 8' * 4'

(*)REPRESENTS ONE POST

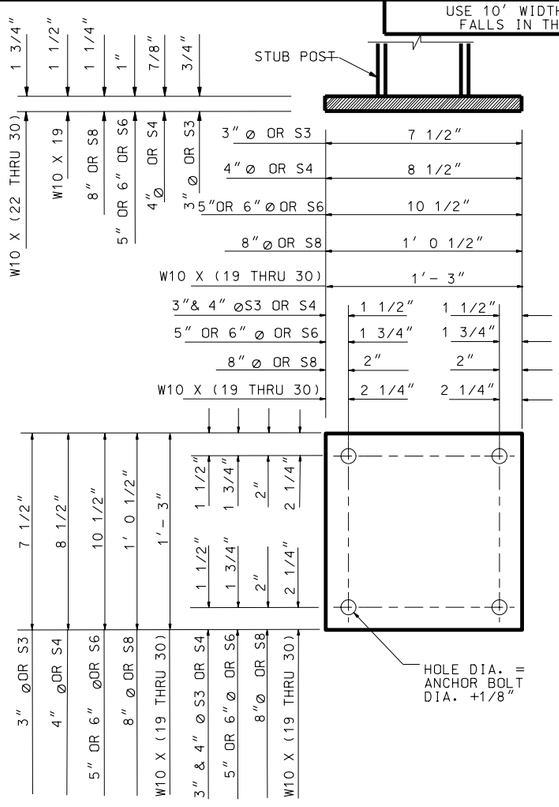

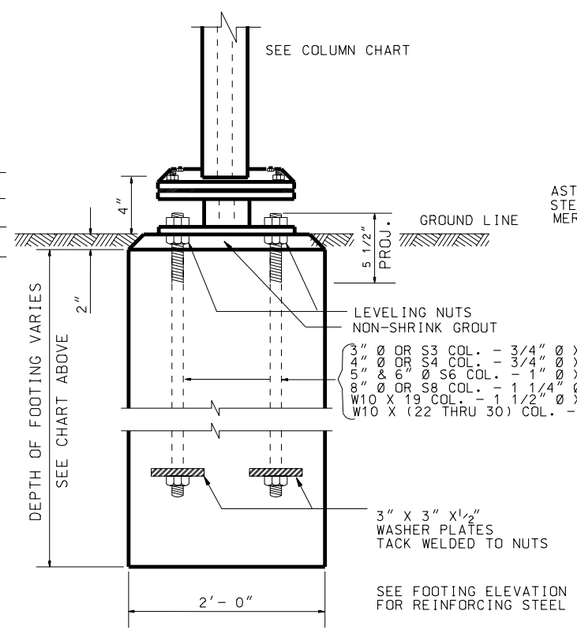

FOOTING DETAILS

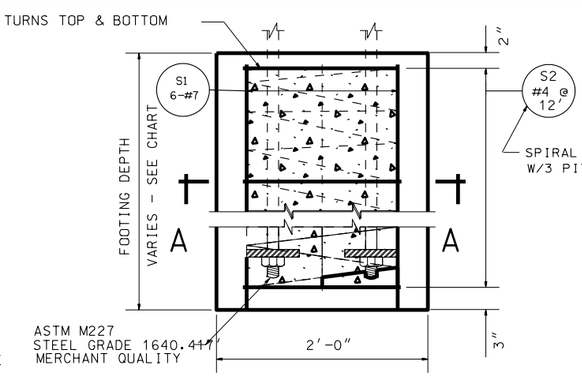

FOOTING ELEVATION

BAR	LENGTH
S1	FOOTING HEIGHT- 2"
S2	7"- 0"

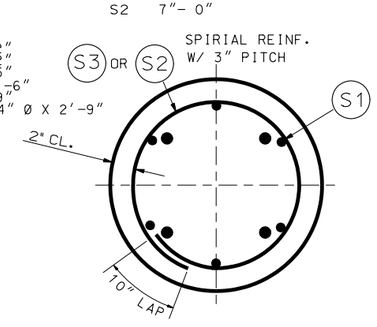

SECTION A - A

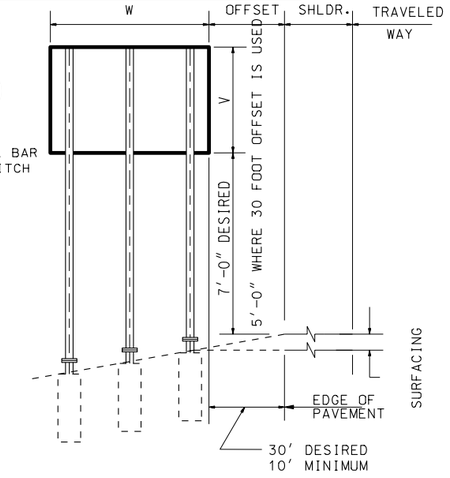

REAR ELEVATION

NOTES:

1. ENTER CHART WITH KNOWN HORIZONTAL AND VERTICAL DIMENSIONS OF SIGN. PROCEED HORIZONTALLY AND VERTICALLY FROM GIVEN DIMENSIONS TO INTERSECTING SQUARE WHICH GIVES IN ORDER, TOP: NUMBER, SIZE AND WEIGHT OF SUPPORT SECTION OR OF STANDARD STRENGTH PIPE COLUMNS, BOTTOM: MINIMUM REQUIRED DEPTH OF FOOTING.
2. SEE STD DWG SN 6 FOR MATERIAL SPECIFICATIONS NOT GIVEN AND GENERAL NOTES.
3. DO NOT ATTACH SIGNS BELOW HINGE POINT.

REVISIONS

NO.	DATE	APPR.	REMARKS

UTAH DEPARTMENT OF TRANSPORTATION
STANDARD DRAWINGS FOR ROAD AND BRIDGE CONSTRUCTION
SALT LAKE CITY, UTAH

RECOMMENDED FOR APPROVAL — JULY 03,2002 DATE
CHAIRMAN STANDARDS COMMITTEE APPROVED — JULY 03,2002 DATE
DEPUTY DIRECTOR

STANDARD DRAWING TITLE: GROUND MOUNTED SIGNS INSTALLATION DETAILS

STD DWG SN 12A

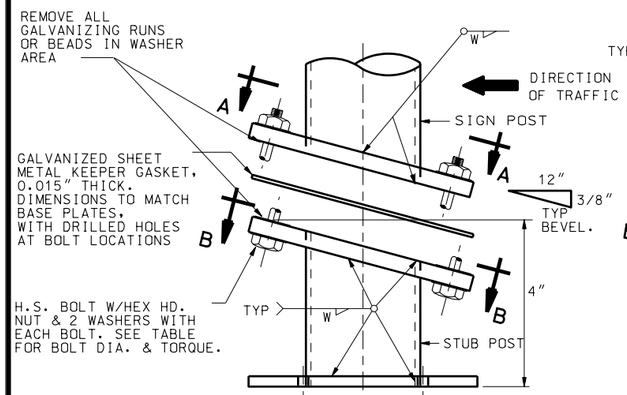

SIGN POST & STUB POST ELEVATION
(FOR PIPE COLUMNS)

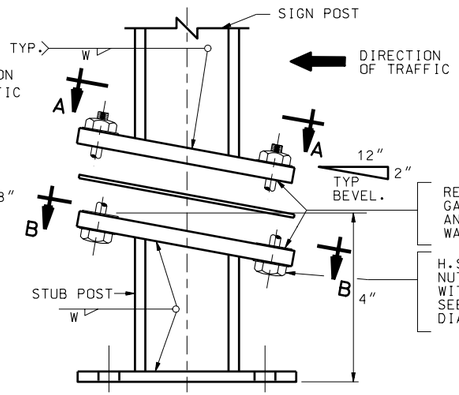

SIGN POST & STUB POST ELEVATION
(FOR S3 & S4 SECTIONS)

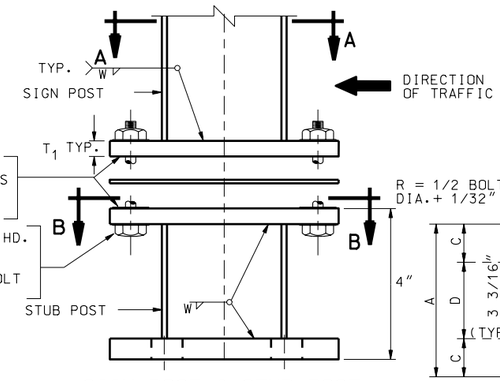

SIGN POST & STUB POST ELEVATION
(FOR S6, S8 & W10 SECTIONS)

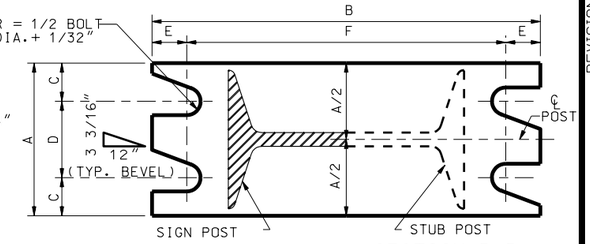

SECTION A–A SECTION B–B
(SEE TABLE FOR DIMENSIONS)

SECTIONS SHOWN ARE FOR INSTALLATIONS ON RIGHT SHOULDER AND IN GORE. PLATE SLOT BEVELS ARE OPPOSITE HAND FROM THAT SHOWN FOR INSTALLATION ON LEFT SHOULDER "S" POST IS SHOWN. PIPE POST SELECTIONS ARE SIMILAR.

BASE CONNECTION DATA TABLE / FUSE PLATE DATA TABLE

POST SIZE	BOLT SIZE & TORQUE	A	B	C	D	E	F	T_1	W	F	G	H	J	K	L	N	T_2	D_1	BOLT DIA.
S3 X 5.7	1/2" DIA.X 2 1/2" 10 FT.-LB. TORQUE	3"	7 1/2"	3/4"	1 1/2"	3/4"	6"	5/8"	3/16"	3 7/16"	2 1/4"	1 1/8"	2 3/8"	1 1/2"	7/16"	1/2"	1/4"	9/16"	1/2"
S4 X 9.5		3 1/2"	7 1/2"	3/4"	2"	3/4"	6"	5/8"	1/4"	3 7/16"	2 1/4"	1 1/8"	2 3/4"	1 1/2"	5/8"	1/2"	5/16"	9/16"	1/2"
S6 X 12.5	5/8" DIA. X 3" 24 FT.-LB. TORQUE	4 1/2"	10"	1 1/8"	2 1/4"	3/4"	8 1/2"	3/4"	5/16"	4 3/8"	2 1/2"	1 1/4"	3 3/8"	2"	11/16"	5/8"	3/8"	9/16"	1/2"
S6 X 17.5		4 1/2"	10"	1 1/8"	2 1/4"	3/4"	8 1/2"	3/4"	5/16"	4 3/8"	2 1/2"	1 1/4"	3 5/8"	2"	13/16"	5/8"	3/8"	11/16"	5/8"
S8 X 18.4		5"	12"	1 1/8"	2 3/4"	3/4"	10 1/2"	3/4"	5/16"	4 3/8"	2 1/2"	1 1/4"	4"	2 1/4"	7/8"	5/8"	7/16"	13/16"	3/4"
W10 X 19.0	3/4" DIA.X 3 1/2" 38 FT.-LB. TORQUE	6"	1'-2 1/2"	1 1/4"	3 1/2"	7/8"	1'-0 3/4"	1"	5/16"	6"	3"	1 1/2"	4"	2 1/4"	7/8"	3/4"	3/8"	15/16"	3/4"
W10 X 22.0		7"	1'-3"	1 1/2"	4"	7/8"	1'-1 1/4"	1"	5/16"	6"	3"	1 1/2"	5 3/4"	3 3/4"	1"	7/8"	3/8"	15/16"	7/8"
W10 X 26.0		7"	1'-3"	1 1/2"	4"	7/8"	1'-1 1/4"	1"	5/16"	6"	3"	1 1/2"	5 3/4"	3 3/4"	1"	7/8"	7/16"	15/16"	7/8"
W10 X 30.0	1" DIA.X 3 1/2" 51 FT.-LB. TORQUE	7"	1'-3"	1 1/2"	4"	7/8"	1' 1 1/4"	1 1/8"	5/16"	6"	3"	1 1/2"	5 3/4"	3 3/4"	1"	7/8"	1/2"	15/16"	7/8"
3" DIA. STD. PIPE	1/2" DIA.X 2 1/2" 10 FT.-LB. TORQUE	4 1/2"	7 1/2"	1"	2 1/2"	3/4"	6"	3/4"	1/4"	NO FUSE PLATE REQUIRED ON PIPE COLUMN									
4" DIA. STD. PIPE		5 1/2"	8 1/2"	1"	3 1/2"	3/4"	7"	3/4"	1/4"										
5" DIA. STD. PIPE	5/8" DIA.X 3 1/2" 24 FT.-LB. TORQUE	6 1/2"	10 1/4"	1 1/4"	4"	7/8"	8 1/2"	1"	1/4"										
6" DIA. STD. PIPE		7 1/2"	11 1/2"	1 1/4"	5"	7/8"	9 3/4"	1"	5/16"										
8" DIA. STD. PIPE		9 1/2"	1'-2"	1 1/4"	7"	7/8"	1'-0 1/4"	1"	5/16"										

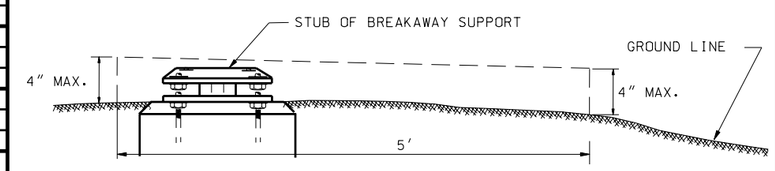

PLACE SIGN SUPPORT FOUNDATION SO IMPACTING VEHICLES DO NOT SNAG ON EITHER FOUNDATION OR ANY SUBSTANTIAL REMAINS OF SIGN SUPPORT. GRADE SURROUNDING TERRAIN TO PERMIT IMPACTING VEHICLES TO PASS OVER FOUNDATION AND PORTIONS OF SIGN SUPPORTS WHICH REMAIN IN THE GROUND OR ARE RIGIDLY ATTACHED TO THE FOUNDATION.

BREAKAWAY SUPPORT STUB HEIGHT MEASUREMENT

NOTES:

1. CONFORM TO THE LATEST EDITION OF AASHTO STANDARD SPECIFICATION FOR STRUCTURAL SUPPORTS FOR HIGHWAY SIGNS, LUMINAIRES AND TRAFFIC SIGNALS.
2. FABRICATE BASE, SLIP AND FUSE PLATES FROM STEEL MEETING THE REQUIREMENTS SPECIFIED FOR THE SIGN POST TO WHICH THEY ARE ATTACHED EXCEPT WHERE PIPE POST ARE USED. IN WHICH CASE CONFORM TO THE REQUIREMENTS OF ASTM A 36.
3. USE STRUCTURAL STEEL THAT IS STRUCTURAL CARBON STEEL CONFORMING TO THE FOLLOWING ASTM DESIGNATIONS: STANDARD PIPE 3"-8" DIA. ASTM A 53 GRADE B. W AND S SHAPES ASTM A 36.
4. USE BOLTS, NUTS AND WASHERS CONFORMING TO ASTM A 325 AND CADMIUM ELECTRO PLATING CONFORMING TO ASTM A 165 NS.
5. WELD TO THE REQUIREMENTS OF THE AASHTO STANDARD SPECIFICATION FOR WELDING OF STRUCTURAL STEEL HIGHWAY BRIDGES.
6. SAW CUTTING ALL PLATE CUTS IS PREFERRED. FLAME CUTTING WILL BE PERMITTED PROVIDED ALL EDGES ARE GROUND. METAL PROJECTING BEYOND THE PLATE FACE WILL NOT BE TOLERATED.
7. GALVANIZE ALL STRUCTURAL STEEL AFTER FABRICATION IN CONFORMANCE TO AASHTO M 111 (ASTM A 123).
8. TIGHTEN HIGH STRENGTH BOLTS IN THE BASE CONNECTION ONLY TO THE TORQUE LIMITS SHOWN IN THE TABLE. DO NOT OVER TIGHTEN.
9. TIGHTEN ALL HIGH STRENGTH FRICTION FUSE BOLTS IN THE SHOP. USE DIRECT- TENSION INDICATOR WASHERS TO TIGHTEN THE BOLTS. SEE STANDARD SPECIFICATION SECTION 05120 ARTICLE 3.2 PARAGRAPH C.
10. MOUNT ALL SIGNS DESIGNATED FOR MOUNTING WITH BREAKAWAY BASES ON UNDIVIDED HIGHWAYS OR ON DIVIDED HIGHWAYS OF LESS THAN FOUR LANES WITH BREAKAWAYS PLATES PARALLEL TO THE BASE PLATES.

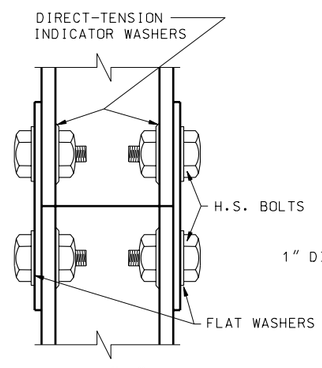

DETAIL "A" HINGE

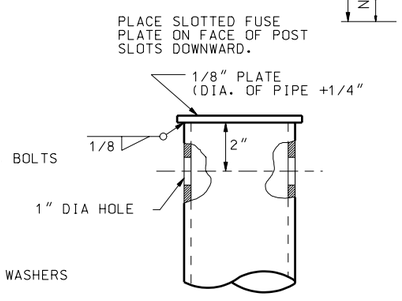

TOP OF PIPE DETAIL

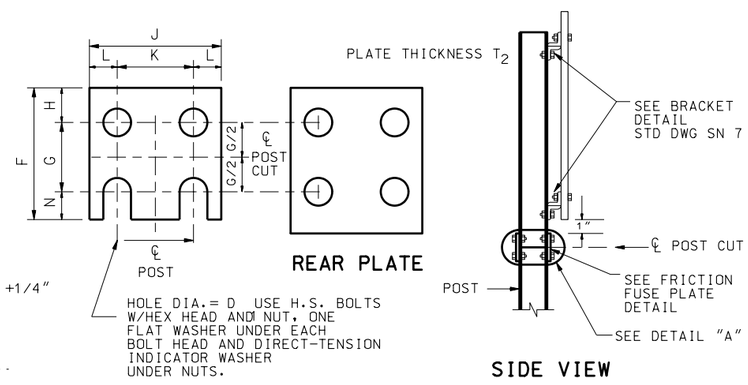

FUSE PLATE DETAIL
(SEE TABLE FOR DIMENSIONS)

NO.	DATE	APPR.	REMARKS

REVISIONS

UTAH DEPARTMENT OF TRANSPORTATION
STANDARD DRAWINGS FOR ROAD AND BRIDGE CONSTRUCTION
SALT LAKE CITY, UTAH

RECOMMENDED FOR APPROVAL — JULY 03,2002 DATE
CHAIRMAN STANDARDS COMMITTEE APPROVED — JULY 03,2002 DATE
DEPUTY DIRECTOR

GROUND MOUNTED SIGN INSTALLATION DETAILS
STANDARD DRAWING TITLE

STD DWG
SN 12B

NOTES:

1. SEE STD DWG SN 6 FOR GENERAL NOTES.
2. USE 18-8 STAINLESS STEEL FOR THE 1/4" R.H. MACHINE SCREWS AND WASHERS AND THE 3/8" BOLTS AND WASHERS USED ON THE SIGN FACE. USE CADMIUM ELECTROPLATING CONFORMING TO ASTM B 766 FOR ALL OTHER BOLTS, NUTS AND WASHERS.
3. SHOP GALVANIZE THE ENTIRE SIGN BRACING ASSEMBLY, STEEL SIGN POST AND U-BOLTS TO MEET AASHTO M 111 (ASTM A 123).
4. USE ASTM A 107, GRADE 1020 MERCHANT QUALITY FOR U-BOLT.
5. USE BOTH 1/4" FLAT WASHERS AND 1/4" LOCK WASHERS ON ALL 1/4" R.H. SCREWS. USE LOCK WASHERS ON ALL BOLTS.

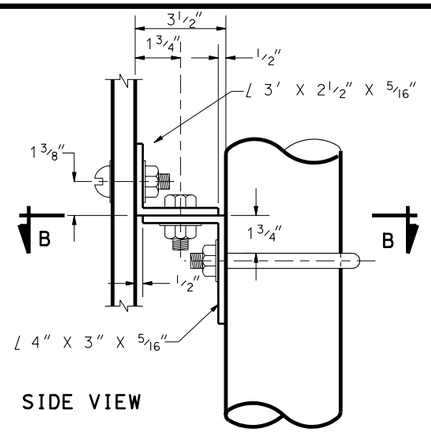

SIDE VIEW

BRACKET DETAIL
(FOR PIPE COLUMNS)

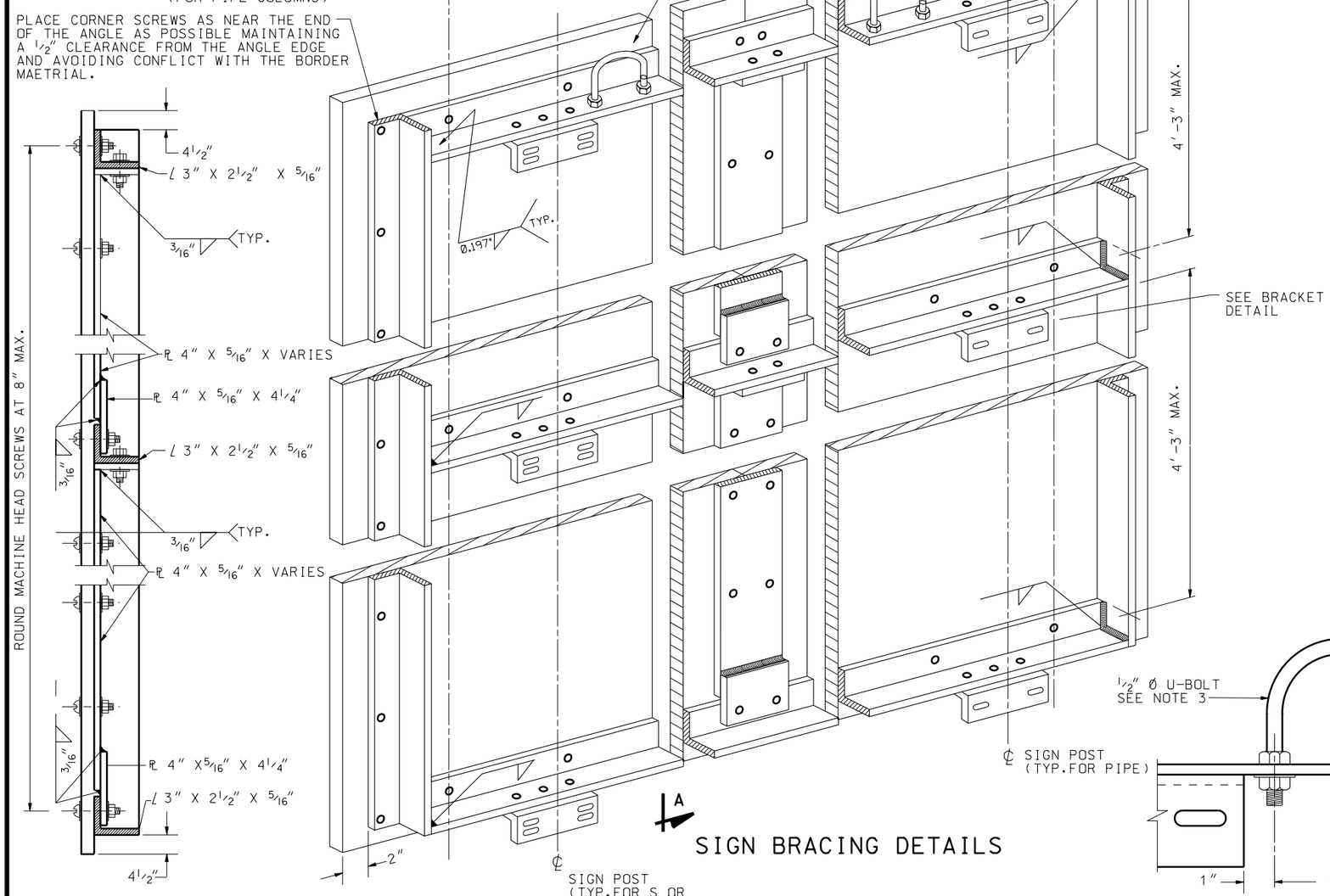

SIGN BRACING DETAILS

SECTION A-A

HANDLING BRACKET DETAIL

SIDE VIEW

BRACKET DETAIL
(FOR S OR W COLUMNS)

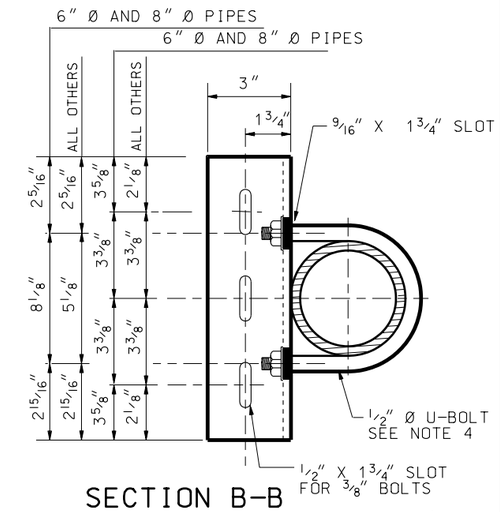

SECTION B-B

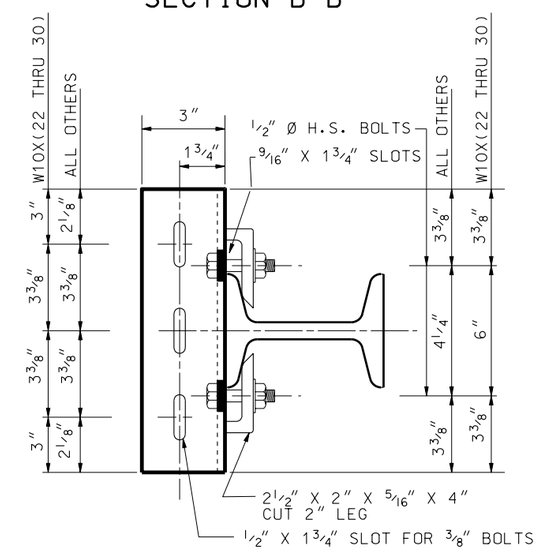

SECTION C-C

NO.	DATE	APPR.	REMARKS

REVISIONS

UTAH DEPARTMENT OF TRANSPORTATION
STANDARD DRAWINGS FOR ROAD AND BRIDGE CONSTRUCTION
SALT LAKE CITY, UTAH

RECOMMENDED FOR APPROVAL — JULY 03,2002 DATE

CHAIRMAN STANDARDS COMMITTEE APPROVED — JULY 03,2002 DATE

DEPUTY DIRECTOR

STANDARD DRAWING TITLE: GROUND MOUNTED SIGN INSTALLATION DETAILS

STD DWG SN 12C

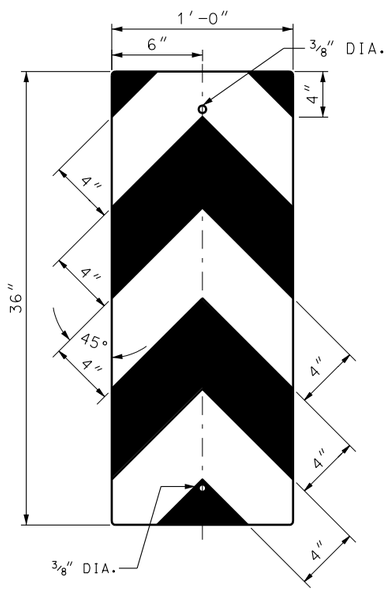

TRAFFIC PASS EITHER SIDE
OM-3C

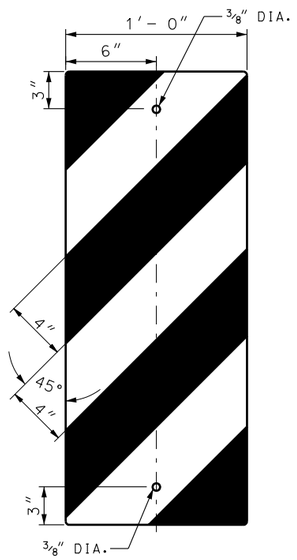

TRAFFIC PASS LEFT
OM-3R

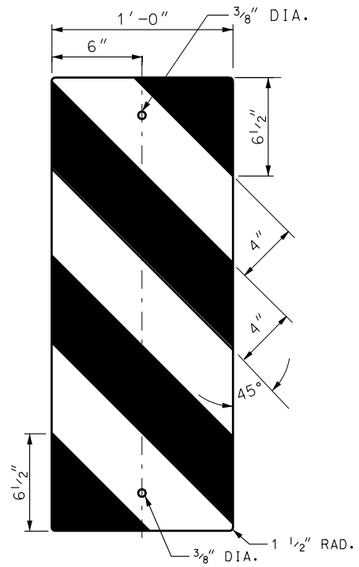

TRAFFIC PASS RIGHT
OM-3L

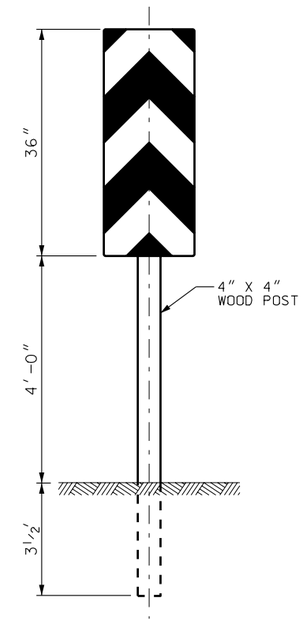

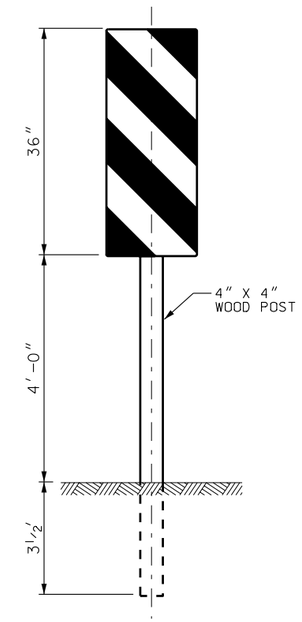

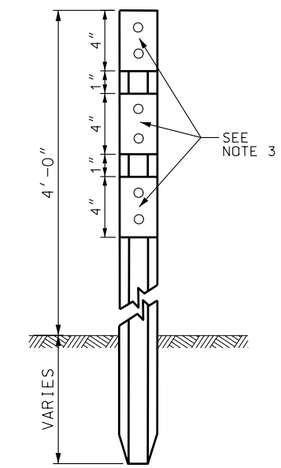

BARRIER MARKER
SEE NOTE 2

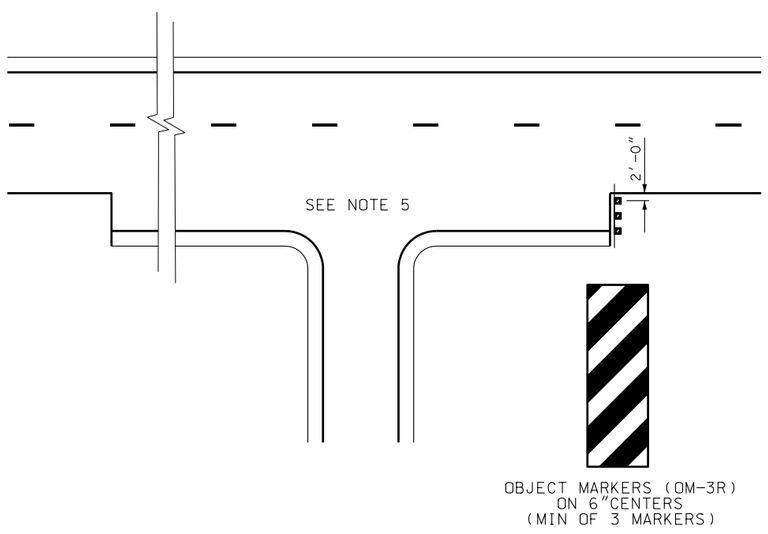

PAVEMENT TRANSITION

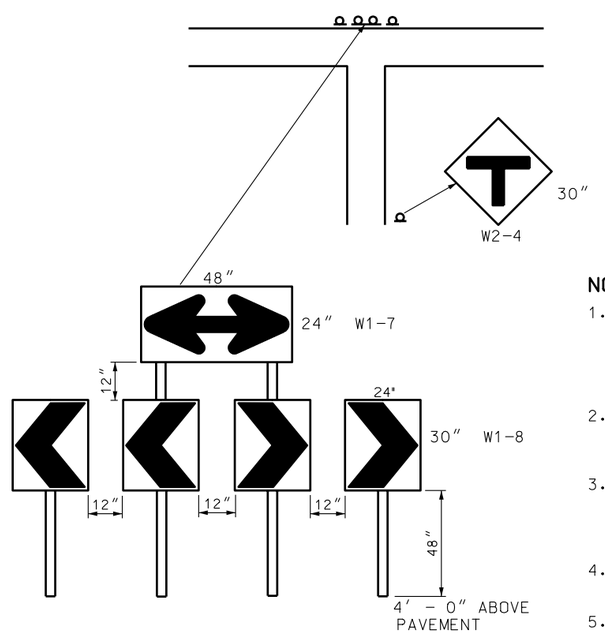

'T' INTERSECTION GUIDANCE

NOTES:

1. USE OM-3C, OM-3R, OR OM-3L TO MARK THE ENDS OF OBSTRUCTIONS SUCH AS NARROW BRIDGES,CULVERTS,ETC. FOR NARROW BRIDGES INSTALL THE MARKER ON EACH SIDE OF BOTH ENDS OF BRIDGE ON TWO-WAY ROADWAYS, AND ON EACH SIDE OF THE APPROACH END OF BRIDGE ON ONE-WAY ROADWAYS.
2. USE BARRIER MARKER TO MARK THE APPROACH TO THE ENDS OF BARRIERS THAT DO NOT HAVE AN ATTENUATOR OR END SECTION INSTALLED.
3. USE REFLECTIVE SHEETING CONFORMING TO SECTION 02891 OF THE STATE OF UTACH STANDARD SPECIFICATIONS FOR ROAD AND BRIDGE CONSTRUCTION. USE REFLECTIVE YELLOW SHEETING OVER NON-REFLECTIVE BLACK SHEETING.
4. INSTALL THREE YELLOW DELINEATOR PLATES IN ACCORDANCE WITH STD DWG GW 9.
5. ATTACH CHEVRON ALIGNMENT PANELS & OBJECT MARKERS TO POST WITH VANDAL RESISTANT FASTENERS.
6. THE TRAFFIC ENGINEER DETERMINES PAVEMENT MARKINGS AND STRIPING FOR PAVEMENT TRANSITION.

NO.	DATE	APPR.	REMARKS

REVISIONS

UTAH DEPARTMENT OF TRANSPORTATION
STANDARD DRAWINGS FOR ROAD AND BRIDGE CONSTRUCTION
SALT LAKE CITY, UTAH

RECOMMENDED FOR APPROVAL — JULY 03,2002 DATE

CHAIRMAN STANDARDS COMMITTEE APPROVED — JULY 03,2002 DATE

DEPUTY DIRECTOR

STANDARD DRAWING TITLE

OBJECT MARKERS
"T" INTERSECTION & PAVEMENT
TRANSITION GUIDANCE

STD DWG
ST 1

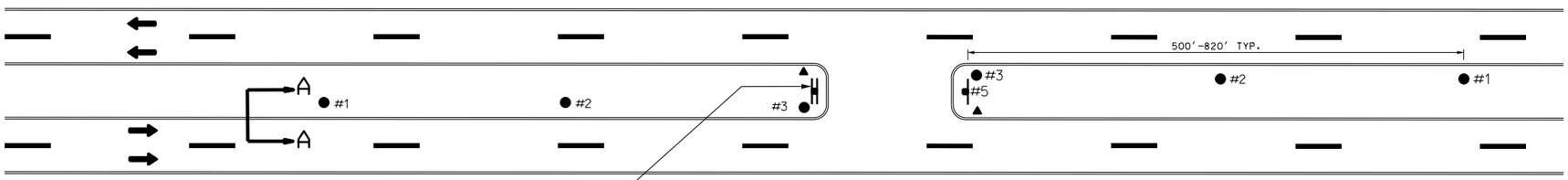

FREEWAY TURN AROUND

LEGEND

● = WHITE FLEXIBLE GUIDE POST

▲ = TYPE II DELINEATOR

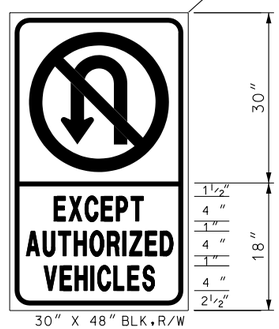

30" X 48" BLK.R/W

SIGN
R3-4

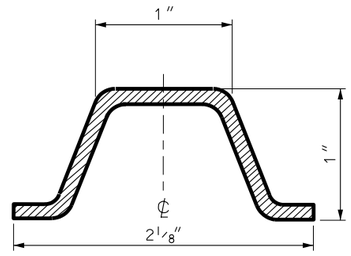

CROSS SECTION
FOR 1.2 LB/FT POST

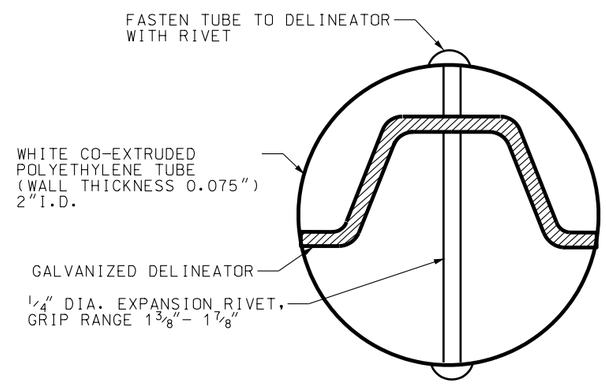

SECTION B-B
SEE NOTES 2,3

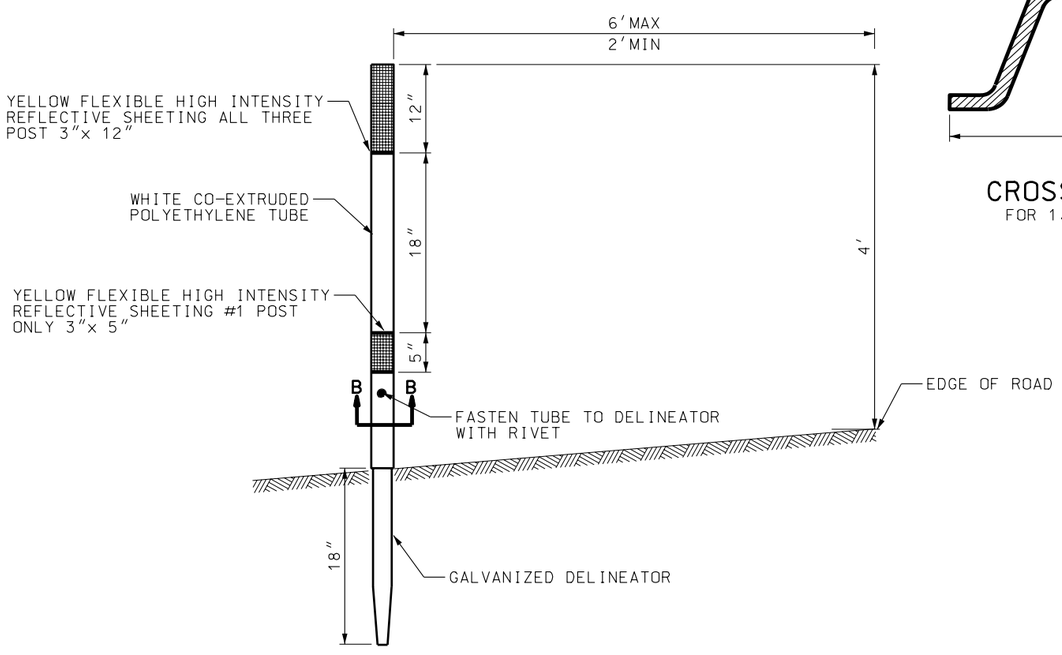

SECTION A-A

NOTES:

1. USE EXISTING DELINEATOR SPACING WHEN POSSIBLE.
   POST #2 SPACED EVENLY BETWEEN POST #1 & #3
   POST #3 PLACE 10 feet IN ADVANCE OF POINT OF TANGENCY.
2. USE GALVANIZED STEEL POST WITH 5/16" HOLES ON 1" SPACING, FULL LENGTH OF POST. ATTACH WHITE POLYETHYLENE TUBE WITH REFLECTIVE SHEETING AS SHOWN.
3. USE OTHER APPROPRIATE WHITE FLEXIBLE GUIDE POST UPON APPROVAL FROM ENGINEER FOR MAINTENANCE.
4. INSTALL TYPE II DELINEATOR AS SHOWN.
5. USE A SIGN AT EACH END OF CROSSING ADJACENT TO APPROACHING TRAFFIC WHERE THE MEDIAN IS SEPARATED BY MORE THAN 150 feet.

REVISIONS

NO.	DATE	APPR.	REMARKS

UTAH DEPARTMENT OF TRANSPORTATION
STANDARD DRAWINGS FOR ROAD AND BRIDGE CONSTRUCTION
SALT LAKE CITY, UTAH

RECOMMENDED FOR APPROVAL — JULY 03,2002 DATE

CHAIRMAN STANDARDS COMMITTEE APPROVED — JULY 03,2002 DATE

DEPUTY DIRECTOR

FREEWAY TURN AROUND MARKINGS

STANDARD DRAWING TITLE

STD DWG
ST 2

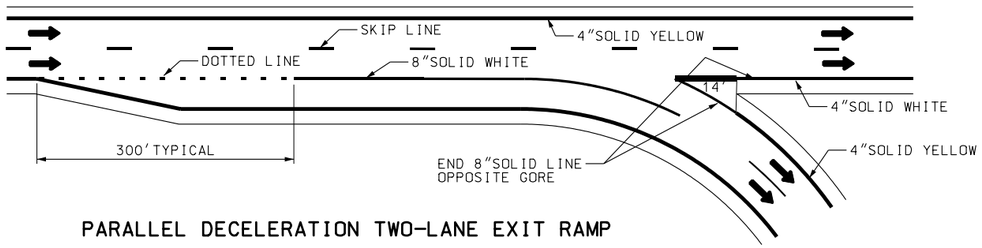

PARALLEL DECELERATION TWO-LANE EXIT RAMP

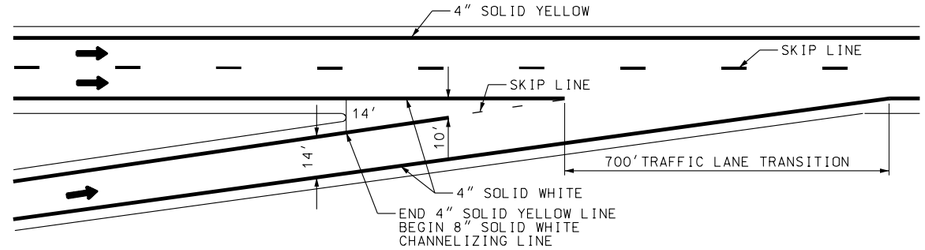

ENTRANCE RAMP

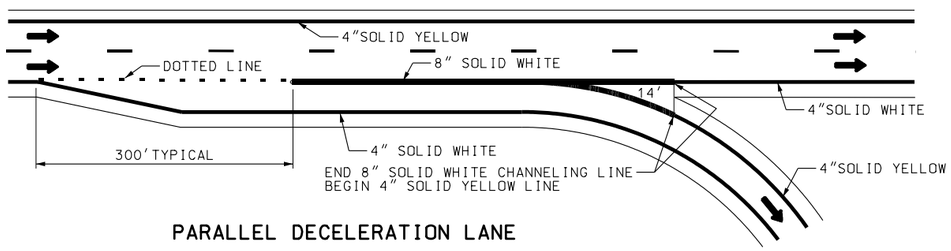

PARALLEL DECELERATION LANE

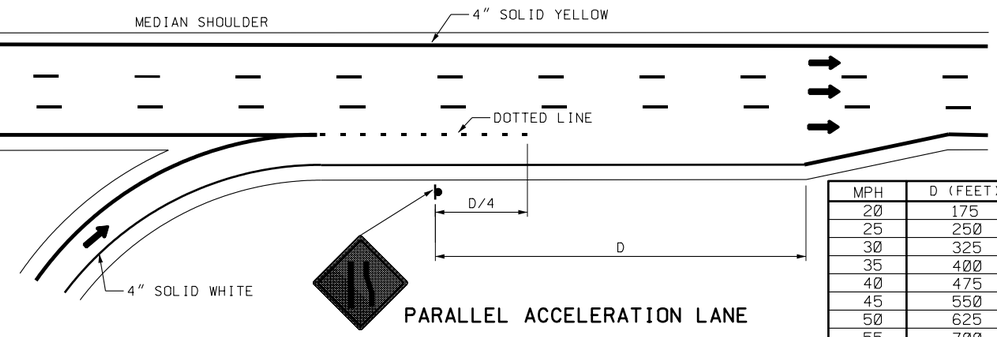

PARALLEL ACCELERATION LANE

MPH	D (FEET)
20	175
25	250
30	325
35	400
40	475
45	550
50	625
55	700
60	775
65	850
70	925
75	1000

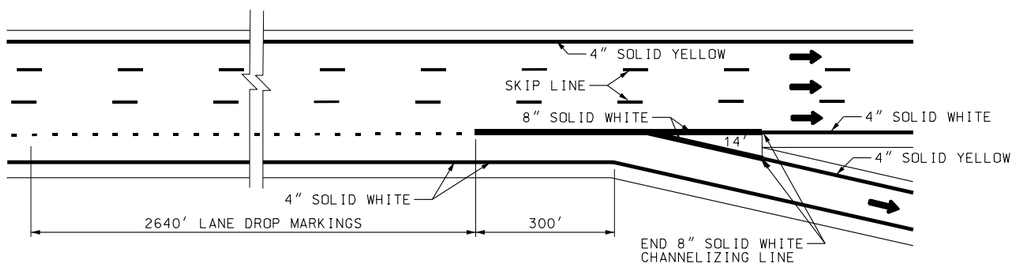

LANE DROP EXIT RAMP

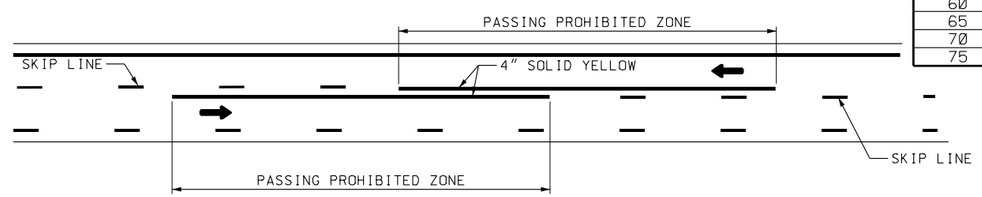

TWO-LANE TWO-WAY

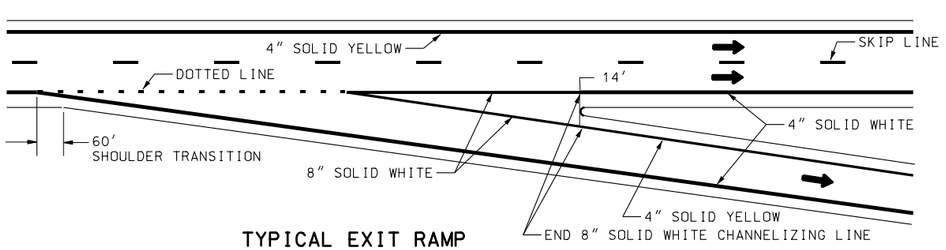

TYPICAL EXIT RAMP

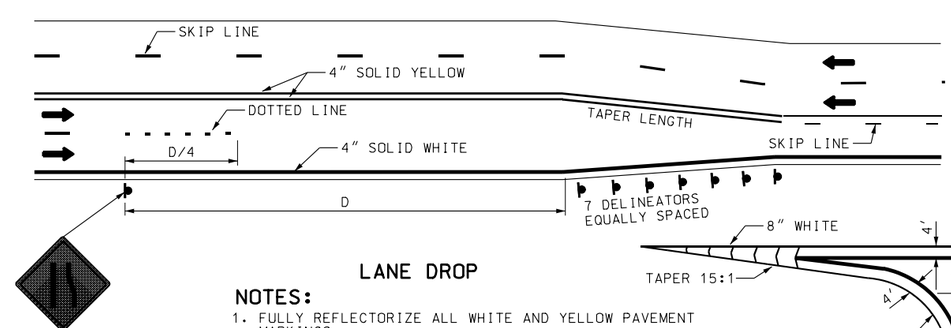

LANE DROP

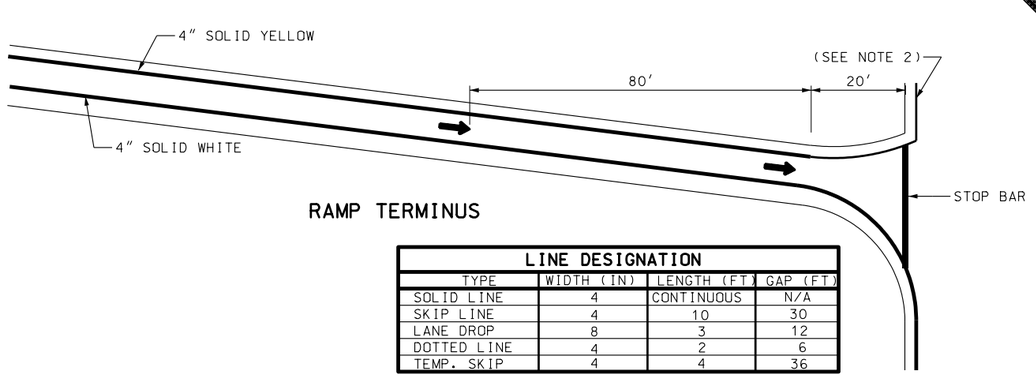

RAMP TERMINUS

LINE DESIGNATION			
TYPE	WIDTH (IN)	LENGTH (FT)	GAP (FT)
SOLID LINE	4	CONTINUOUS	N/A
SKIP LINE	4	10	30
LANE DROP	8	3	12
DOTTED LINE	4	2	6
TEMP. SKIP	4	4	36

NOTES:

1. FULLY REFLECTORIZE ALL WHITE AND YELLOW PAVEMENT MARKINGS.
2. TIE RAMP SHOULDER STRIPING INTO EXISTING SHOULDER STRIPING ON THE CROSS STREET WITH A GRADUAL TRANSITION. DISCONTINUE RAMP SHOULDER STRIPING AT THE CROSS STREET EDGE OF PAVEMENT.
3. PAINT A SHOULDER LINE IN AREAS WHERE PAVEMENT EXTENDS TO CURB AND GUTTER, TO DEFINE THE TRAVEL PATH OF A TYPICAL LANE (11 OR 12 FEET WIDE) WHEN THE LATERAL DISTANCE FROM OUTSIDE SKIP LINE OR PERMISSIVE TURN LANE TO LIP OF GUTTER IS 16 FEET OR GREATER. THE REGION TRAFFIC ENGINEER CAN AUTHORIZE EXCEPTIONS TO EXLUDE SHOULDER LINES IN THESE AREAS.
4. PAINT THE LEFT EDGE OF EACH ROADWAY OF DIVIDED ROADS WITH A YELLOW SHOULDER LINE.
5. GET APPROVAL FOR CHANGES TO EXISTING OR INSTALLATION OF NEW PASS ZONES BY TRAFFIC AND SAFETY DIVISION.
6. CONTACT THE REGION TRAFFIC ENGINEER FOR STRIPING AND PAVEMENT MARKINGS ON MULTI-LANE RAMP TERMINI.

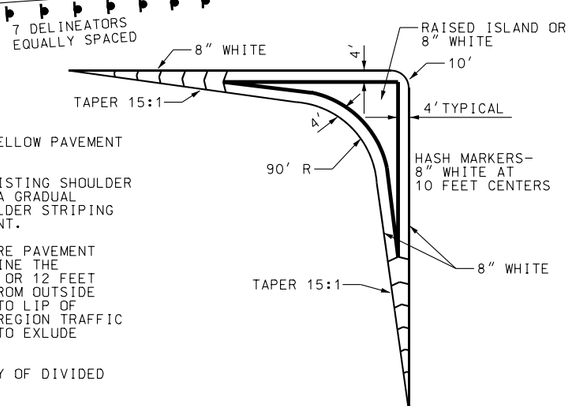

CHANNELIZING ISLAND

NO.	DATE	APPR.	REMARKS

REVISIONS

UTAH DEPARTMENT OF TRANSPORTATION
STANDARD DRAWINGS FOR ROAD AND BRIDGE CONSTRUCTION
SALT LAKE CITY, UTAH

RECOMMENDED FOR APPROVAL — JULY 03,2002 DATE
CHAIRMAN STANDARDS COMMITTEE APPROVED — JULY 03,2002 DATE
DEPUTY DIRECTOR

STANDARD DRAWING TITLE: TYPICAL PAVEMENT MARKINGS

STD DWG
ST 3

NOTES:

1. THE REGION TRAFFIC ENGINEER DETERMINES THE NUMBER AND LOCATIONS OF CROSSWALKS AT AN INTERSECTION.
2. THE REGION TRAFFIC ENGINEER DETERMINES WHEN TO USE THE "SPECIAL EMPHASIS" CROSSWALK.
3. PLACE THE STOP LINE AT DESIRED STOPPING POINT.
4. USE A WIDER STOP LINE ONLY WHEN APPROVED BY THE REGION TRAFFIC ENGINEER.
5. ESTABLISH A "NO PARKING" ZONE 30 FEET PRIOR TO FLASHING SIGNAL, STOP SIGN, YELD SIGN, OR TRAFFIC CONTROL SIGNAL PLACED ON THE SIDE OF ROADWAY.
6. RED CURB MARKING IS OPTIONAL FOR "NO PARKING" ZONE.

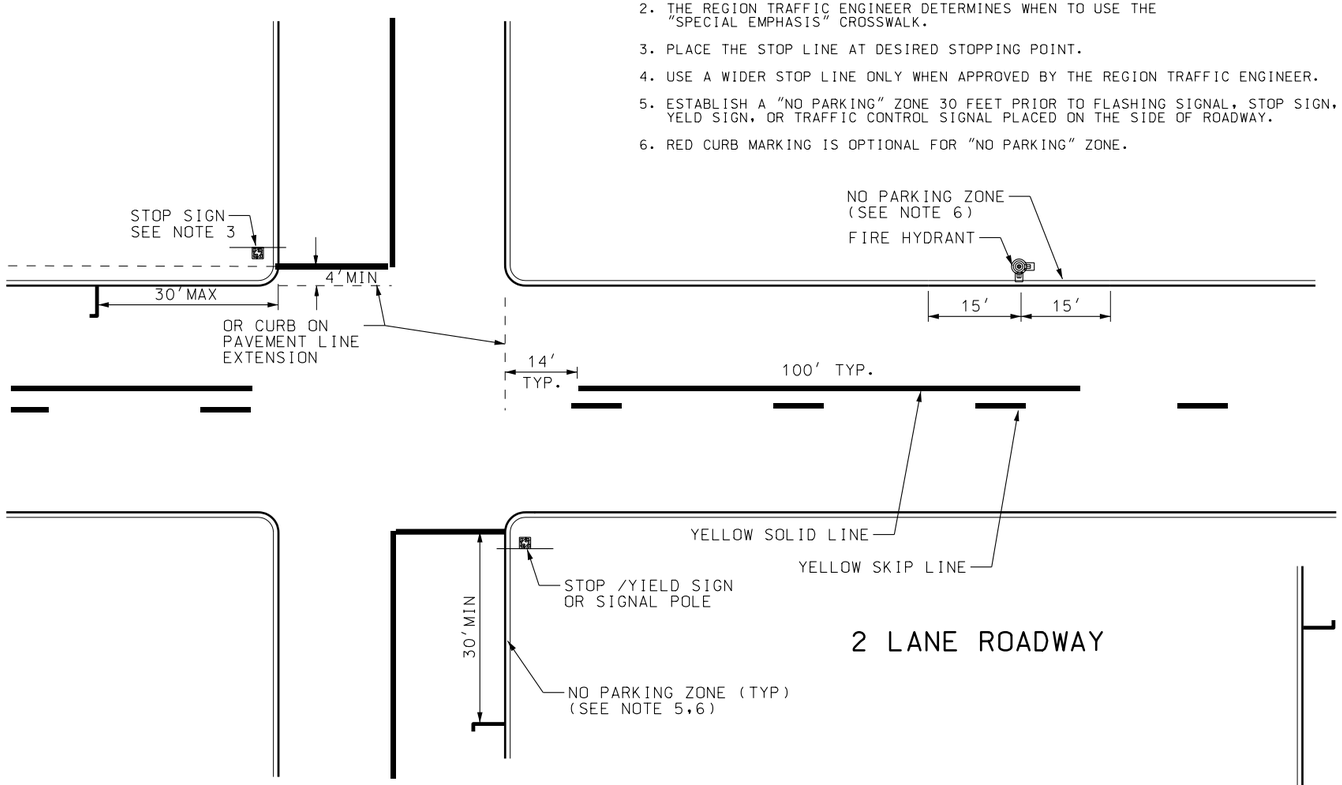

2 LANE ROADWAY

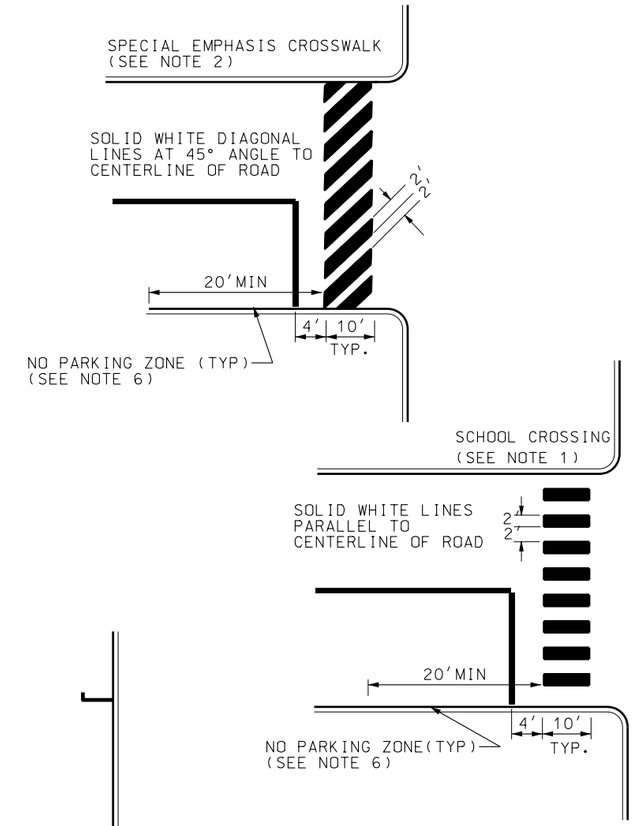

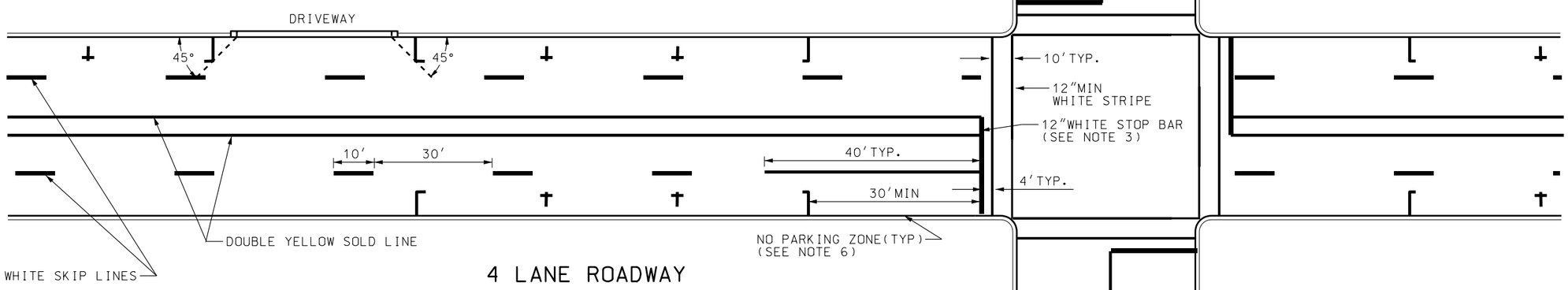

4 LANE ROADWAY

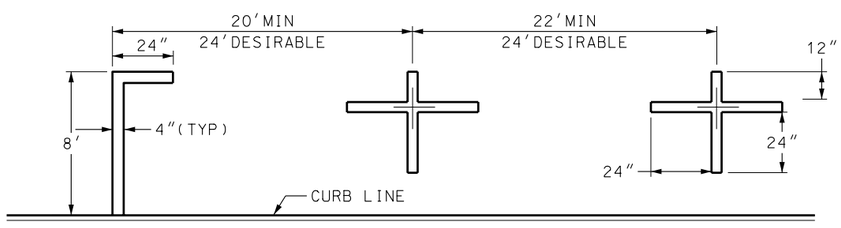

STANDARD PARALLEL PARKING

NO.	DATE	APPR.	REMARKS

REVISIONS

UTAH DEPARTMENT OF TRANSPORTATION
STANDARD DRAWINGS FOR ROAD AND BRIDGE CONSTRUCTION
SALT LAKE CITY, UTAH

RECOMMENDED FOR APPROVAL — JULY 03,2002 DATE

CHAIRMAN STANDARDS COMMITTEE APPROVED — JULY 03,2002 DATE

DEPUTY DIRECTOR

STANDARD DRAWING TITLE

CROSSWALKS,PARKING AND INTERSECTION APPROACHES

STD DWG
ST 4

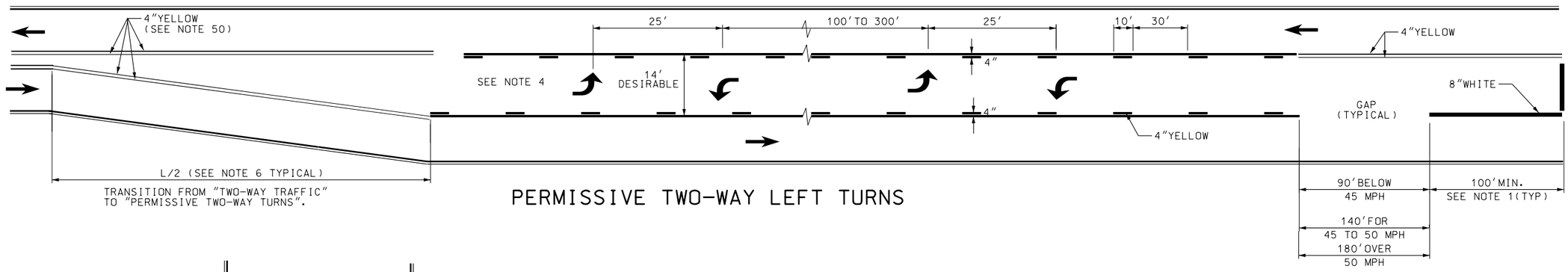

PERMISSIVE TWO-WAY LEFT TURNS

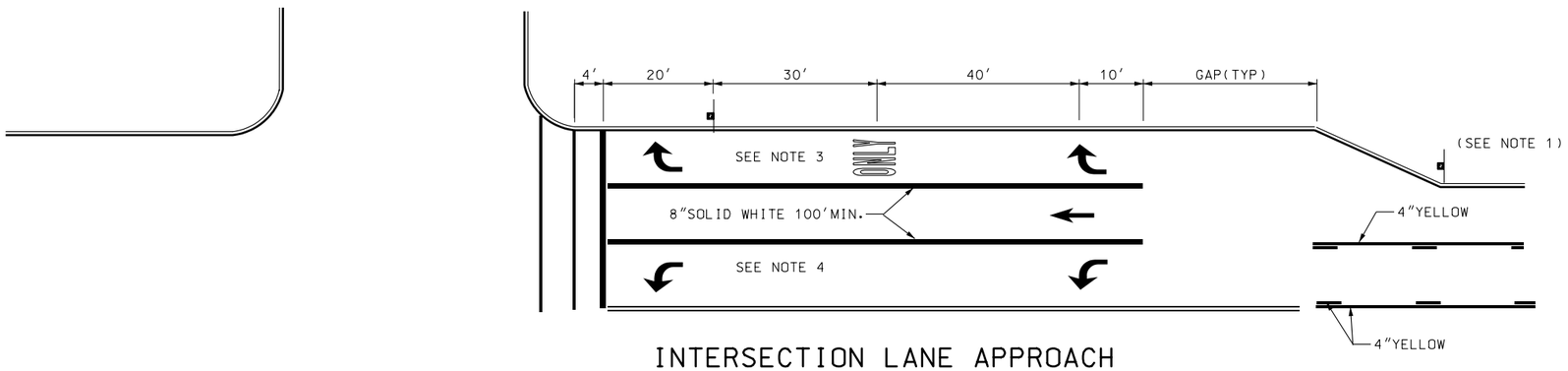

INTERSECTION LANE APPROACH

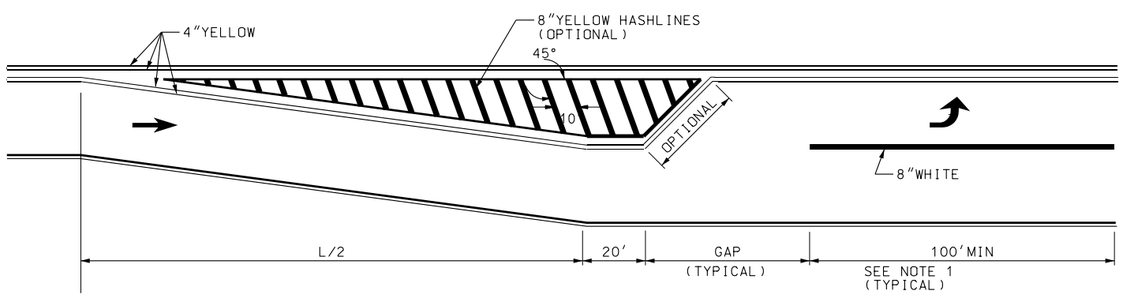

PAINTED LEFT TURN LANE

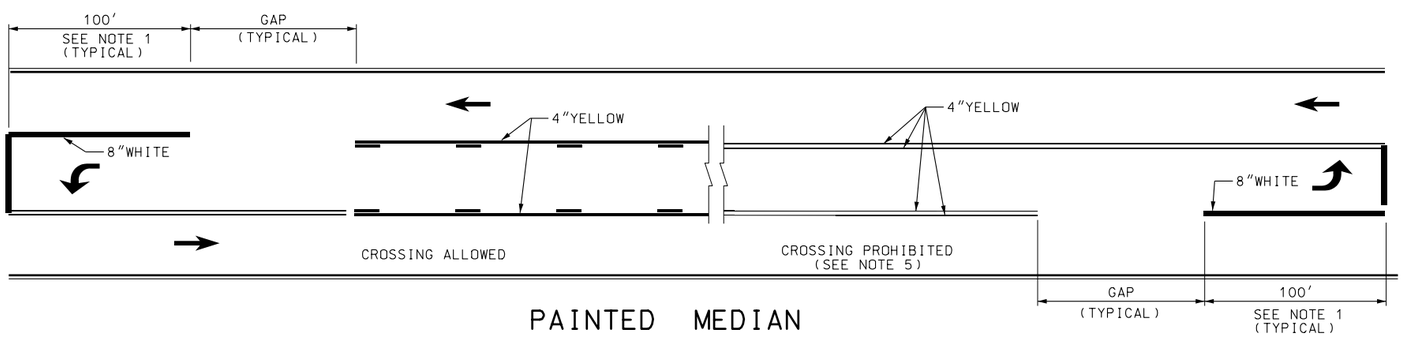

PAINTED MEDIAN

NOTES:

1. USE A CAPACITY ANALYSIS TO DETERMINE THE LENGTH OF STORAGE REQUIRED FOR TURN LANE. A MINIMUM LENGTH OF 100 FEET IS REQUIRED.
2. USE THE STANDARD ALPHABET FOR HIGHWAY SIGNS AND PAVEMENT MARKINGS FOR PAVEMENT MESSAGES.
3. USE PAVEMENT MARKINGS CONSISTING OF ARROWS, THE WORD "ONLY" IN LANE, AND THE STANDARD SIGN R3-7R WHEN THE LANE IS A MANDATORY MOVEMENT.
4. PAVEMENT MARKINGS ARE OPTIONAL FOR MANDATORY LEFT TURN LANES AND TWO-WAY LEFT TURN LANES.
5. CREATE A CROSSING PROHIBITED ISLAND OR MEDIAN BY PLACING TWO DOUBLE YELLOW LINES FOR EACH DIRECTION (4 SOLID YELLOW LINES TOTAL)
6. TAPER FORMULA: $L = SW$ FOR SPEEDS OF 45 MPH OR GRATER
   $L = WS^2/60$ FOR SPEEDS OF 40 MPH OR LESS.
7. FOR RAISED MEDIAN AND PLOWABLE END SECTION DETAILS SEE STD DWG GW 1

NO.	DATE	APPR.	REMARKS

REVISIONS

UTAH DEPARTMENT OF TRANSPORTATION
STANDARD DRAWINGS FOR ROAD AND BRIDGE CONSTRUCTION
SALT LAKE CITY, UTAH

RECOMMENDED FOR APPROVAL — JULY 03,2002 DATE

CHAIRMAN STANDARDS COMMITTEE APPROVED — JULY 03,2002 DATE

DEPUTY DIRECTOR

PAINTED MEDIAN & AUXILIARY LANE DETAILS

STANDARD DRAWING TITLE

STD DWG

ST 5

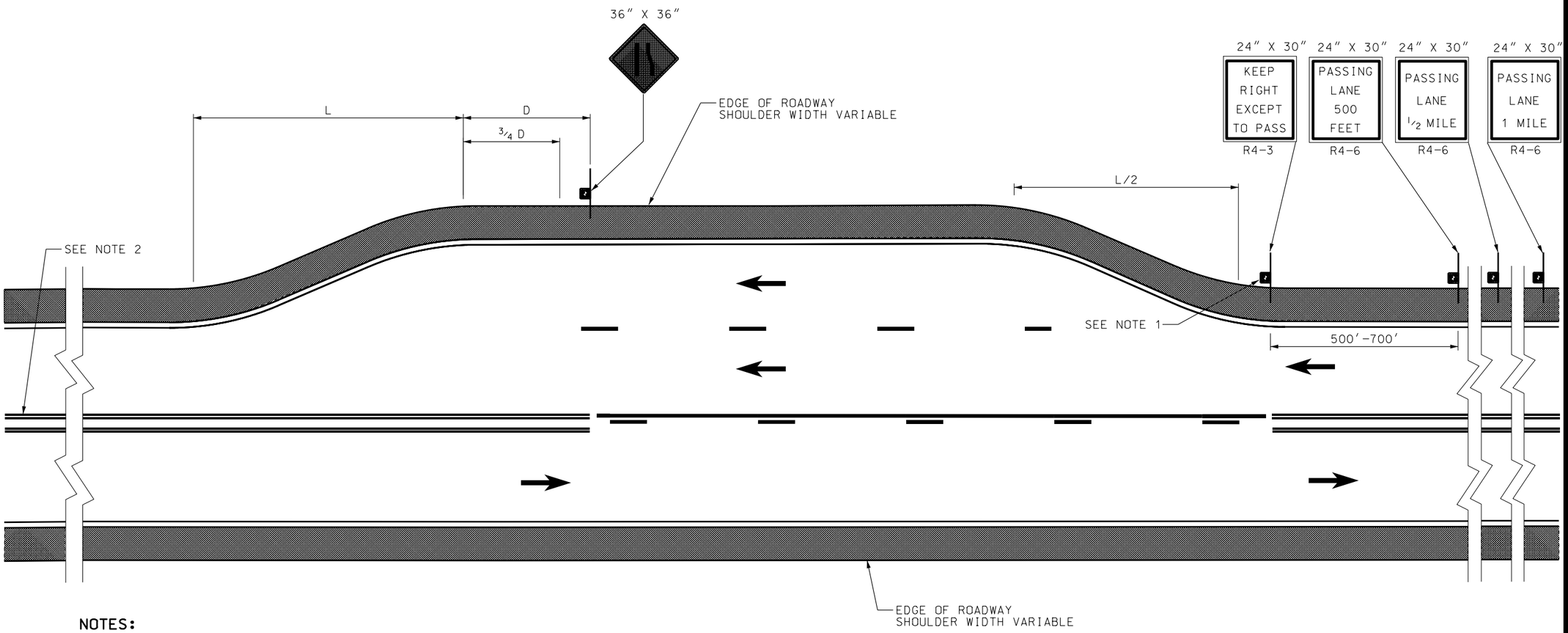

NOTES:

1. REPEAT THE R4-3 SIGN AT 1 MILE INTERVALS WHEN PASSING LANE EXCEEDS 2 MILES IN LENGTH.
2. PERMIT DOWN GRADE PASSING, PROVIDED PASSING ZONE CRITERIA IS MET. PLACE "NO PASSING" MARKINGS THROUGH AND BEYOND THE TRANSITION AREA UNTIL ADEQUATE SIGN DISTANCE IS MET.
3. USE TABLE II FOR DISTANCE "D".
4. USE THE FOLLOWING FORMULAS TO DETERMINE "L":

   L= S x W OR TABLE 1

   FOR SPEEDS LESS THAN 45 MPH

   $L = \frac{WS^2}{60}$ OR TABLE II

   L = LENGTH IN FEET
   S = SPEED LIMIT
   W = OFFSET IN FEET

TABLE I

SPEED MPH	AVERAGE RUNNING SPEED MPH	MIN. TRUCK SPEED MPH	"L" TRANSITION LENGTH (feet)	L/2 TRANSITION LENGTH (feet)
30	28	13	180	90
40	36	21	320	160
45	40	25	540	270
50	44	29	600	300
55	48	30	660	330
60	52	30	720	360
65	55	30	780	390
70	58	30	840	420

TABLE II

MPH	D (feet)
20	175
25	250
30	325
35	400
40	475
45	550
50	625
55	700
60	775
65	850

REVISIONS

NO.	DATE	APPR.	REMARKS

UTAH DEPARTMENT OF TRANSPORTATION
STANDARD DRAWINGS FOR ROAD AND BRIDGE CONSTRUCTION
SALT LAKE CITY, UTAH

RECOMMENDED FOR APPROVAL — JULY 03,2002 DATE
CHAIRMAN STANDARDS COMMITTEE APPROVED — JULY 03,2002 DATE
DEPUTY DIRECTOR

PASSING/CLIMBING LANES TRAFFIC CONTROL

STANDARD DRAWING TITLE

STD DWG
ST 6

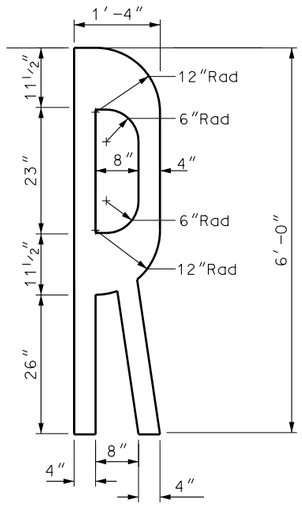

SPACING TABLE

SPEED LIMIT MPH	MIN. DISTANCE (feet)
65 - 70	750
55 - 60	550
45 - 50	375
35 - 40	225
25 - 30	100

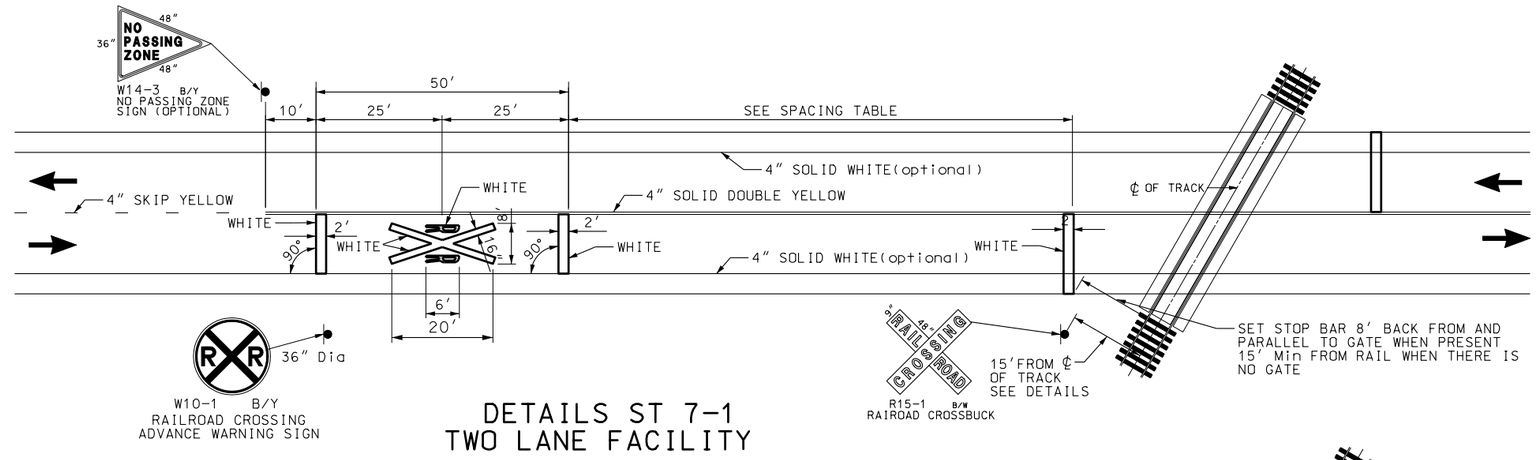

DETAILS ST 7-1
TWO LANE FACILITY

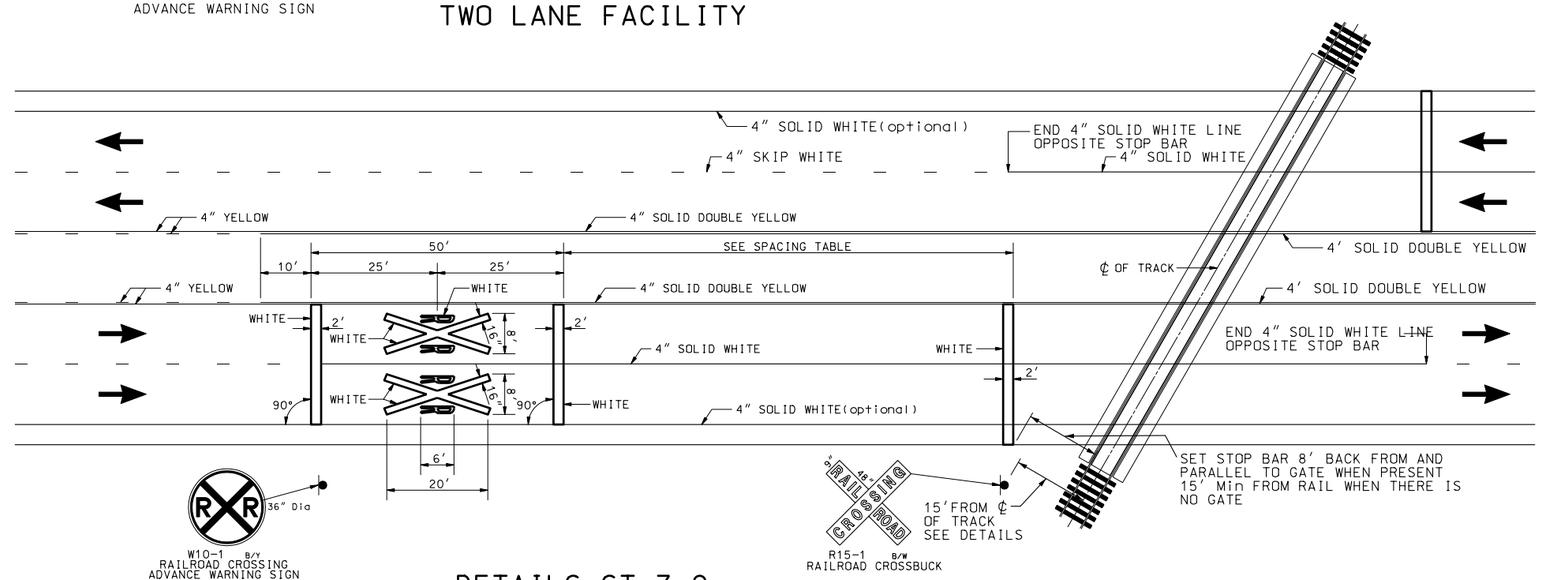

DETAILS ST 7-2
MULTI LANE FACILITY

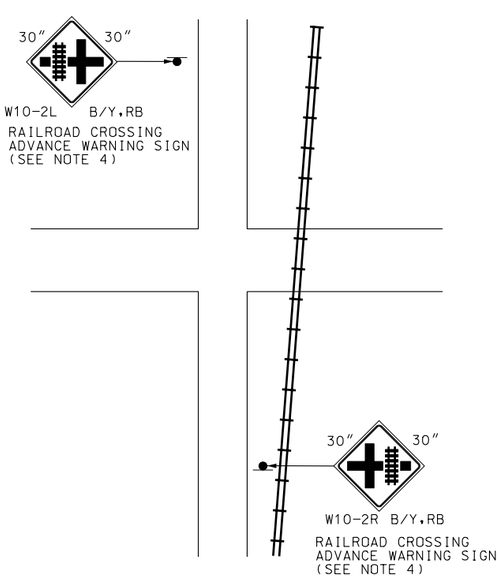

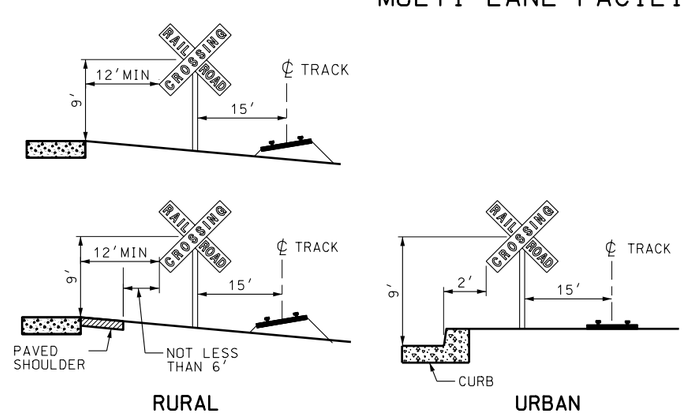

DETAILS

NOTES:

1. PLACE PAVEMENT MARKINGS, CONSISTING OF AN "RXR", TRANSVERSE LINES, AND NO-PASSING MARKINGS. USE MARKINGS IN EACH APPROACH LANE ON ALL PAVED APPROACHES TO GRADE CROSSING WHERE GRADE CROSSING SIGNALS OR AUTOMATIC GATES ARE PRESENT AND AT ALL OTHER GRADE CROSSINGS WHERE THE SPEED IS 40 MPH OR GREATER. PLACE PAVEMENT MARKINGS AT OTHER CROSSINGS AS DIRECTED BY THE REGION TRAFFIC ENGINEER.
2. EXTEND TRANSVERSE LINES ACROSS ALL APPROACH LANES ON MULTI-LANE ROADS. USE INDIVIDUAL "RXR" MARKINGS IN EACH APPROACH LANE.
3. USE AN ADDITIONAL W10-1 ON CROSS STREET WHEN AN INTERSECTION IS LOCATED BETWEEN THE W10-1 AND THE GRADE CROSSING.
4. USE W10-2 SIGN WHERE THERE IS NOT A W10-1 SIGN BETWEEN THE INTERSECTION AND GRADE CROSSING.
5. USE STANDARD ALPHABET FOR HIGHWAY SIGN AND PAVEMENT MARKINGS FOR DIMENSIONS OF RAILROAD PAVEMENT MARKINGS.

REVISIONS

NO.	DATE	APPR.	REMARKS

UTAH DEPARTMENT OF TRANSPORTATION
STANDARD DRAWINGS FOR ROAD AND BRIDGE CONSTRUCTION
SALT LAKE CITY, UTAH

RECOMMENDED FOR APPROVAL — JULY 03,2002 DATE

CHAIRMAN STANDARDS COMMITTEE APPROVED — JULY 03,2002 DATE

DEPUTY DIRECTOR

PAVEMENT MARKINGS AND SIGNS AT RAILROAD CROSSING

STANDARD DRAWING TITLE

STD DWG
ST 7

NOTES:

1. PLACE A MINIMUM OF 10 PLOWABLE PAVEMENT MARKERS AT 20′ CENTERS IN EACH SIDE OF GORE FROM BEGINNING OF GORE. (MINIMUM TOTAL = 20 MARKERS)
2. CLEAR MARKERS SUPPLEMENT WHITE PAINT LINES. YELLOW MARKERS SUPPLEMENT YELLOW PAINT LINES.
3. THE REGION TRAFFIC ENGINEER WILL APPROVE ALL OTHER LOCATIONS.

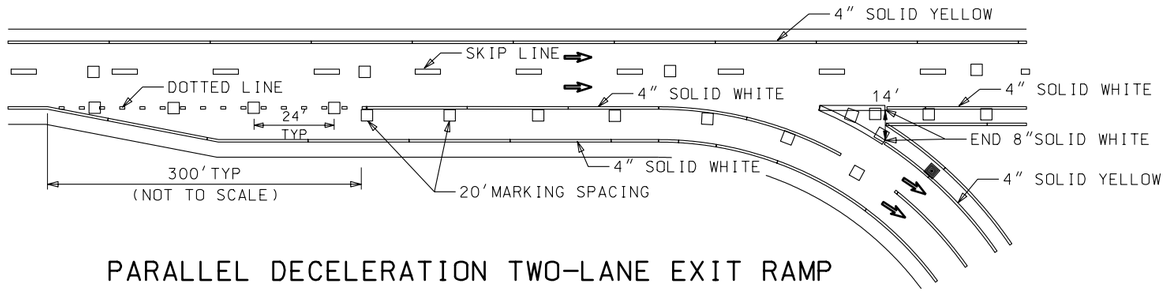

PARALLEL DECELERATION TWO-LANE EXIT RAMP

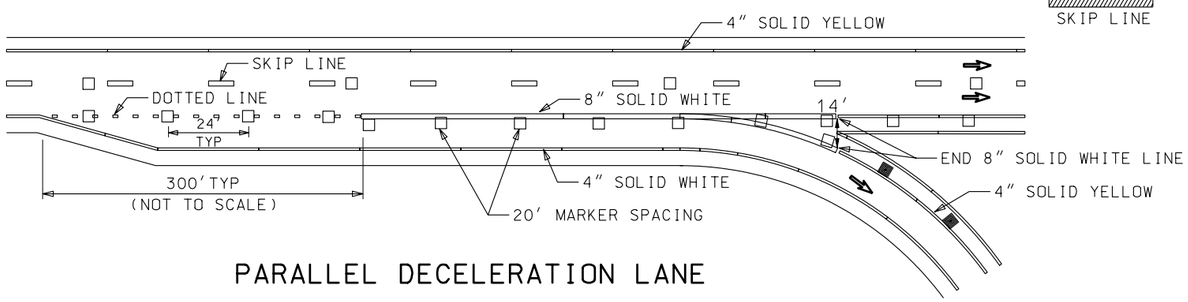

PARALLEL DECELERATION LANE

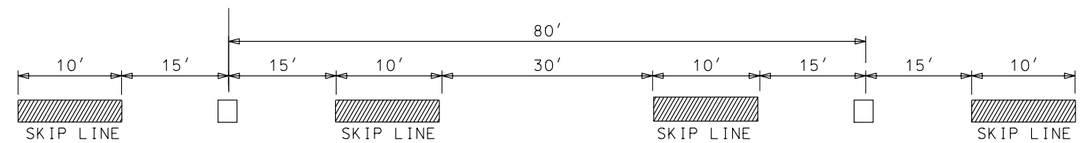

80′ MARKER SPACING BETWEEEN SKIP LINES
ON TANGENT AND FOR R℄ 1900′

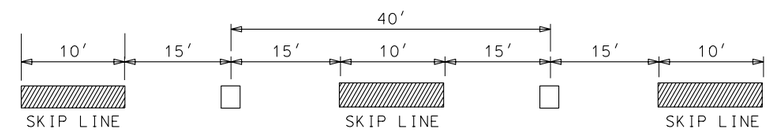

40′ MARKER SPACING BETWEEEN SKIP LINES
FOR 1900′ ℄ R ℄ 400′

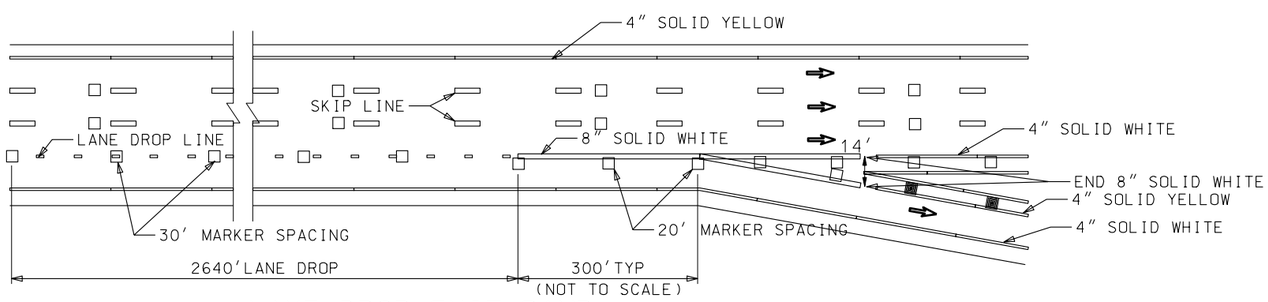

LANE DROP EXIT RAMP

FOR R <400′
20′ MARKER SPACING BETWEEEN SKIP LINES

DETAIL "A"

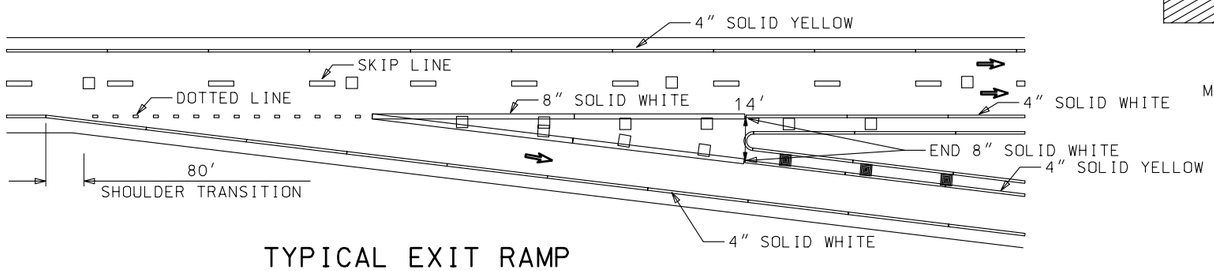

TYPICAL EXIT RAMP

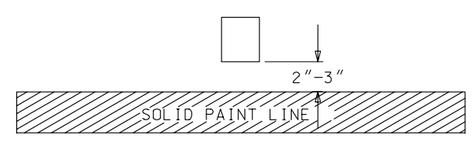

DETAIL "B"
MARKER SUPPLEMENTING SOLID PAINT LINE

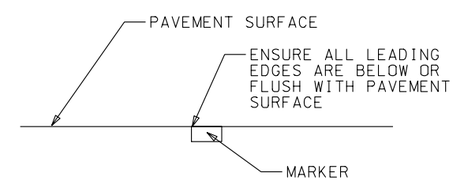

DETAIL "C"
MARKER IN PAVEMENT SURFACE

LEGEND

□ = CLEAR ONE WAY MARKER
■ = YELLOW ONE WAY MARKER
R = RADIUS OF CURVE

NO.	DATE	APPR.	REMARKS

REVISIONS

UTAH DEPARTMENT OF TRANSPORTATION
STANDARD DRAWINGS FOR ROAD AND BRIDGE CONSTRUCTION
SALT LAKE CITY, UTAH

RECOMMENDED FOR APPROVAL — JULY 03,2002 DATE
CHAIRMAN STANDARDS COMMITTEE APPROVED — JULY 03,2002 DATE
DEPUTY DIRECTOR

PLOWABLE PAVEMENT MARKERS
STANDARD DRAWING TITLE

STD DWG
ST 8

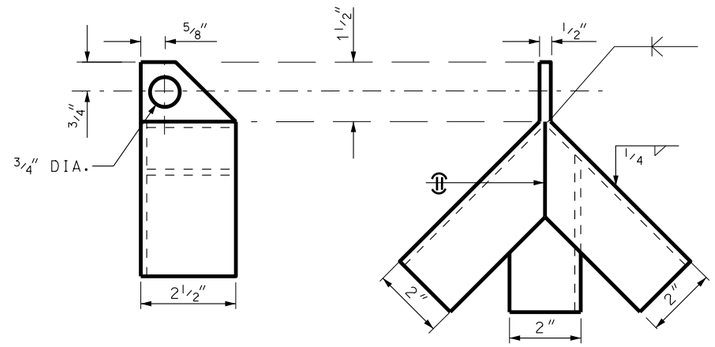

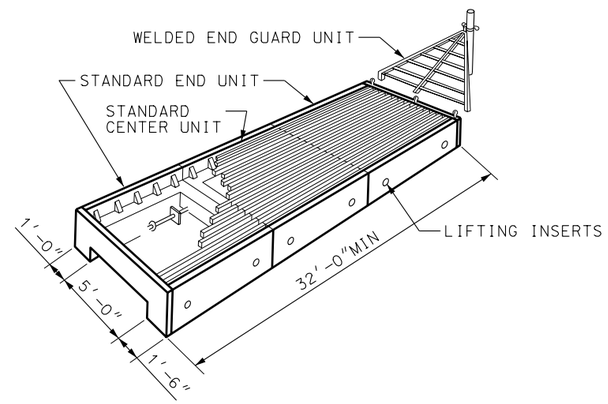

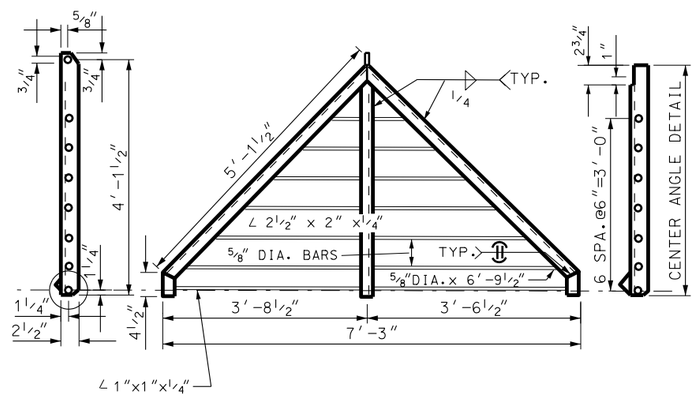

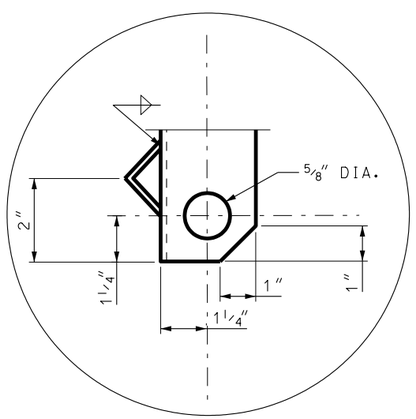

WELDED END GUARD UNIT
WT.W/BOLTS, U-CLAMP AND
PIPE POST 115 LBS
(2 REQUIRED)

NOTES:

1. USE COATED DEFORMED-BILLET REINFORCING STEEL BARS CONFORMING TO AASHTO M 284 OR M 111 AND M 31 GRADE 60.
2. USE STRUCTURAL STEEL CONFORMING TO AASHTO M 270 GRADE 36 AND GALVANIZE AFTER FABRICATION IN ACCORDANCE WITH AASHTO M 111 (ASTM A 123)
3. SUB-EXCAVATE SOIL 2'-0" AND BACKFILL WITH GRANULAR BACKFILL BORROW AND COMPACT.
4. ANY MODIFICATION REQIRES APPROVAL.
5. USE CONCRETE CLASS AA(AE)

DESIGN DATA

HS-20 LOADING IN ACCORDANCE WITH AASHTO STANDARD SPECIFICATION
fc= 1400 psi
fs= 2,400 psi (REINFORCING STEEL)
fs= 20,000 psi (STRUCTURAL STEEL)
n=8

REVISIONS

NO.	DATE	APPR.	REMARKS

UTAH DEPARTMENT OF TRANSPORTATION
STANDARD DRAWINGS FOR ROAD AND BRIDGE CONSTRUCTION
SALT LAKE CITY, UTAH

RECOMMENDED FOR APPROVAL — JULY 03,2002 DATE
CHAIRMAN STANDARDS COMMITTEE APPROVED — JULY 03,2002 DATE
DEPUTY DIRECTOR

STANDARD DRAWING TITLE
WELDED END GUARD UNIT

STD DWG
SW 1A

NOTE:
TOP OF THE CATTLE GUARD PARALLEL TO THE HIGWAY PROFILE GRADE.
ROTATE UNITS TO ACCOMPLISH THIS IF REQ'D.

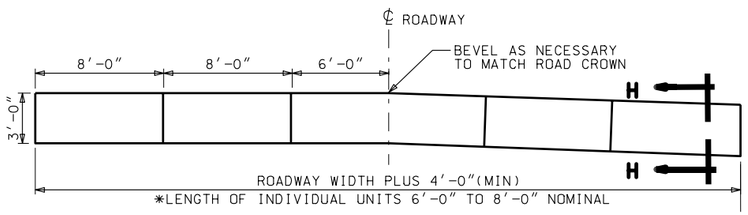

TYPICAL CATTLE GUARD INSTALLATION

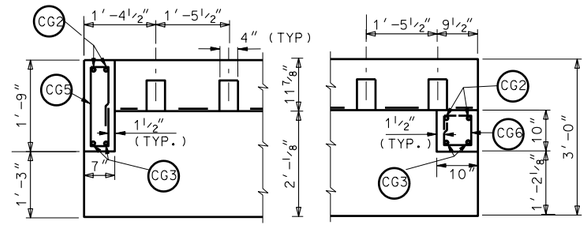

SECTION B-B SECTION C-C

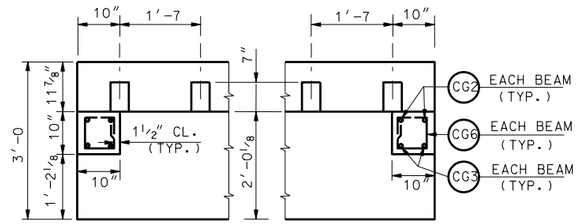

SECTION D-D

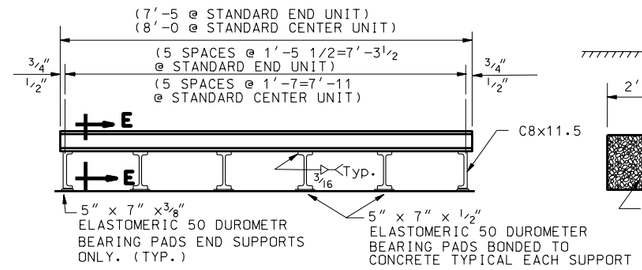

TRAFFIC GRILL UNIT

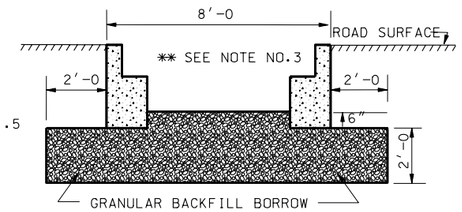

SECTION H-H

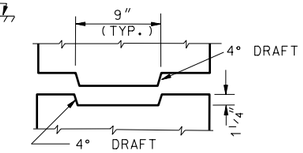

SECTION F-F

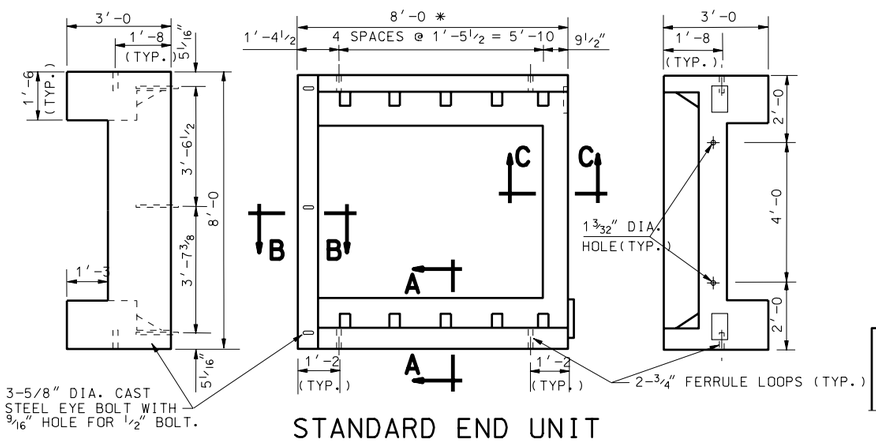

STANDARD END UNIT
(LEFT SIDE SHOWN-RIGHT SIDE SIMILAR)

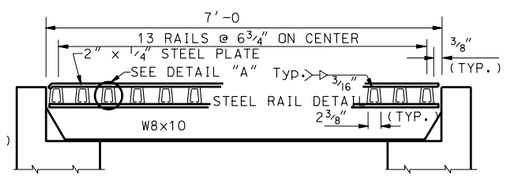

SECTION E-E

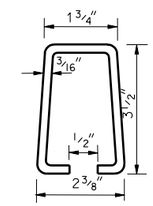

DETAIL "A"

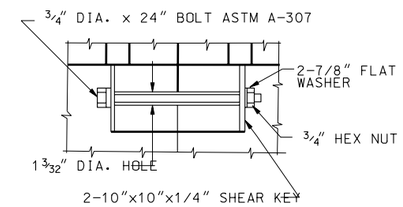

SECTION G-G

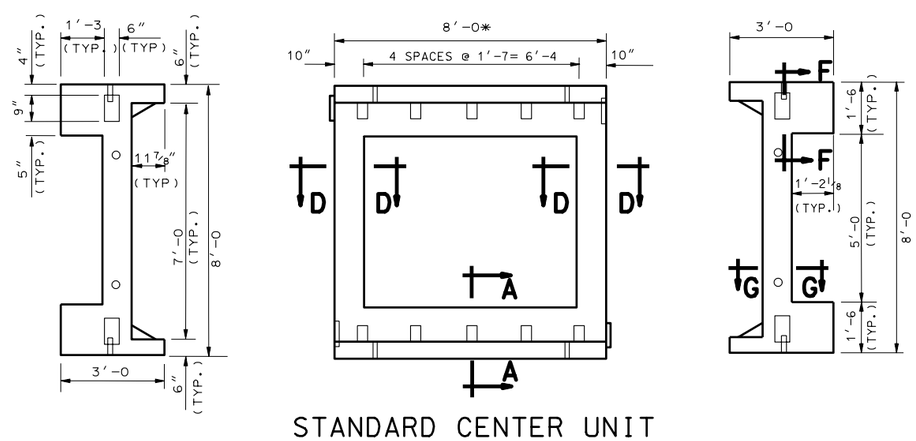

STANDARD CENTER UNIT

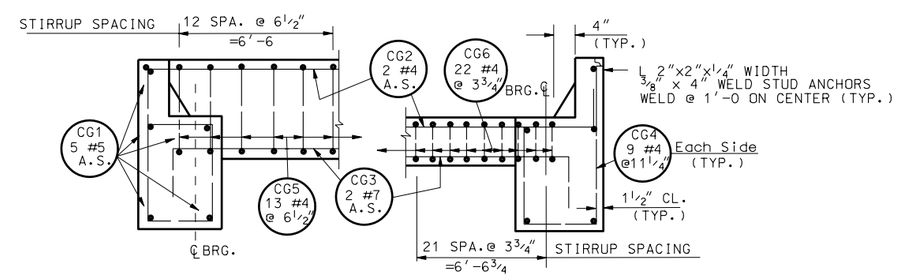

SECTION A-A

** SEE NOTES ON STD DWG SW 1A

REINFORCING STEEL SCHEDULE

MARK	LOCATION	SIZE NO.	NO. BARS	LENGTH	TOTAL LENGTH	SKETCH		
CG1	CATTLE GUARD	5	10	7'-9	77'-6			
						A	B	
CG2	CATTLE GUARD	4	4	9'-5	37'-8	7'-9	10"	
CG3	CATTLE GUARD	7	4	8'-6	34'-0	6'-10	10"	
CG4	CATTLE GUARD	4	18	7'-0	126'-0			

MARK	LOCATION	SIZE NO.	NO. BARS	LENGTH	TOTAL LENGTH	SKETCH
CG5	CATTLE GUARD	4	13	4'-2	54'-2	
CG6	CATTLE GUARD	4	22	2'-8	58'-8	

STRUCT. STEEL PER UNIT

ITEM	NO. REQ'D	SIZE	LENGTH
BEAM	4	W8 x 10	7'-0
CHANNEL	2	C8 x 11.5	7'-0
RAIL/END UNIT	13		7'-6
RAIL/CENTER UNIT	13		8'-0
ANGLE	2	L2 x 2 x ¼	8'-0
STUD ANCHOR	16	⅜ DIA.	4"

REVISIONS

NO.	DATE	APPR.	REMARKS

UTAH DEPARTMENT OF TRANSPORTATION
STANDARD DRAWINGS FOR ROAD AND BRIDGE CONSTRUCTION
SALT LAKE CITY, UTAH

RECOMMENDED FOR APPROVAL — JULY 03,2002 DATE
CHAIRMAN STANDARDS COMMITTEE APPROVED — JULY 03,2002 DATE
DEPUTY DIRECTOR

PRECAST CONCRETE CATTLE GUARD
STANDARD DRAWING TITLE

STD DWG
SW 1B

TYPICAL NOISE WALL PLACEMENT LOCATION

R/W LINE APPLICATION

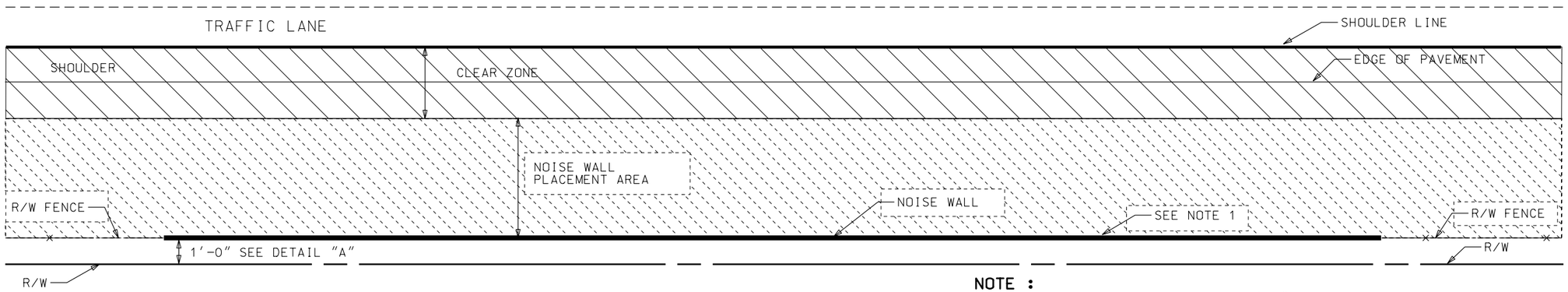

NOTE :

1. PLACE NOISE WALL A MINIMUM OF 1'-0" INSIDE R/W LINE AND CONNECT R/W FENCE TO BOTH ENDS OF WALL. IF NOT PLACED 1'-0" INSIDE R/W LINE, PLACE NO CLOSER THAN 11'-6" FROM R/W LINE FOR MAINTENANCE PURPOSES AND ENVIRONMENTAL CONSIDERATIONS.

N/A LINE APPLICATION

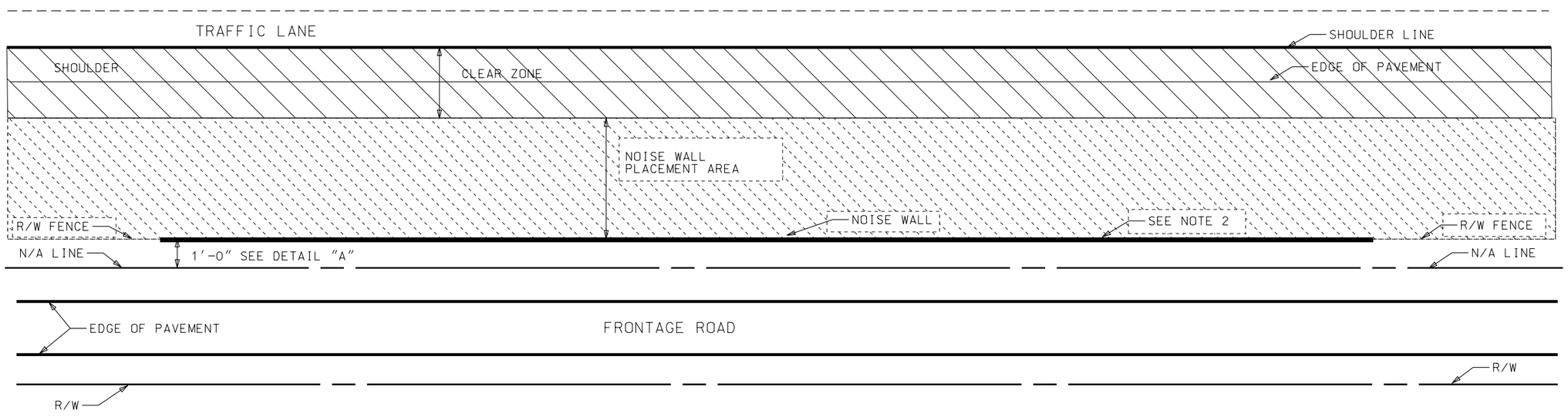

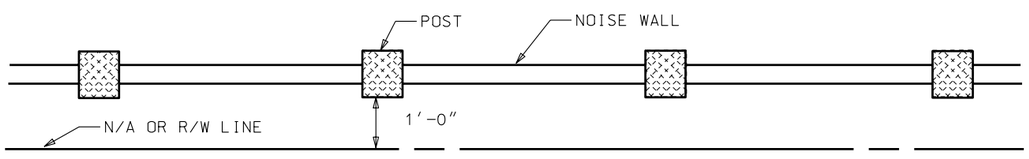

DETAIL "A"

NOTE :

1. WHEN N/A LINE IS PRESENT, PLACE NOISE WALL A MINIMUM OF 1'-0" INSIDE N/A LINE AND CONNECT R/W FENCE TO BOTH ENDS OF WALL. IF NOT PLACED 1'-0" INSIDE R/W LINE, PLACE NO CLOSER THAN 11'-6" FROM R/W LINE FOR MAINTENANCE PURPOSES AND ENVIRONMENTAL CONSIDERATIONS.
2. DO NOT PLACE NOISE WALLS OUTSIDE N/A LINE.

REVISIONS

NO.	DATE	APPR.	REMARKS

UTAH DEPARTMENT OF TRANSPORTATION
STANDARD DRAWINGS FOR ROAD AND BRIDGE CONSTRUCTION
SALT LAKE CITY, UTAH

RECOMMENDED FOR APPROVAL — JULY 03,2002 DATE

CHAIRMAN STANDARDS COMMITTEE APPROVED — JULY 03,2002 DATE

DEPUTY DIRECTOR

STANDARD DRAWING TITLE: NOISE WALL PLACEMENT AREA

STD DWG: SW 2

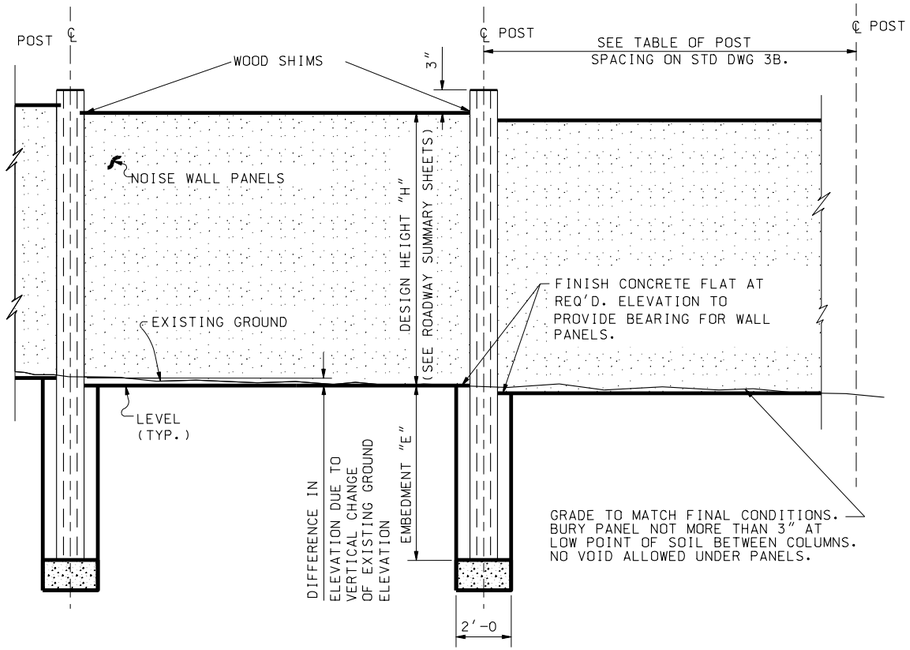

TYPICAL ELEVATION

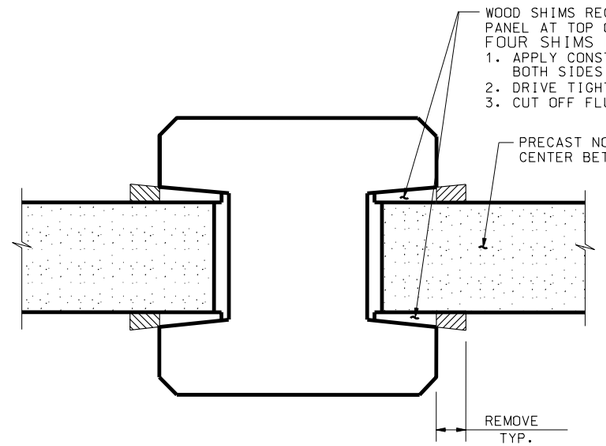

POST PANEL DETAIL

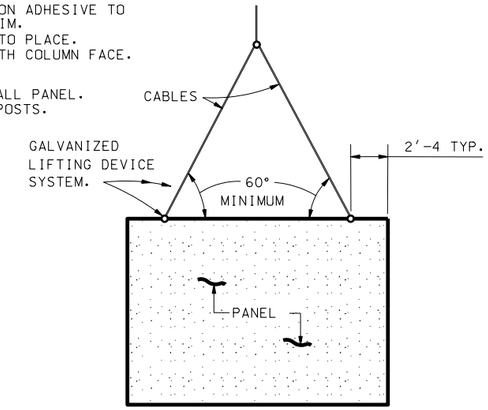

LIFTING DEVICE DETAIL

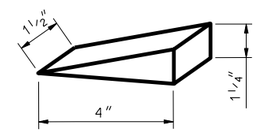

WOOD SHIM DETAIL

NOTES:

1. CHAMFER EXPOSED CONCRETE CORNERS AS SHOWN.
2. PROVIDE 2 " COVER TO REINFORCING STEEL EXCEPT WHERE NOTED OTHERWISE.
3. SEE ROADWAY PLANS FOR LOCATION AND HEIGHT OF PRECAST NOISE WALL.
4. ALL PANELS ARE 12'-6" LONG AND 5"THICK.
5. SEE STD DWG SW 2 "NOISE WALL PLACEMENT AREA" FOR ADDITIONAL PLACEMENT INFORMATION.

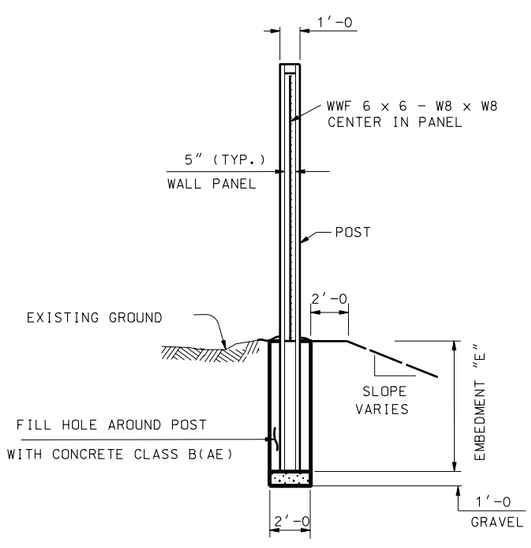

TYPICAL SECTION

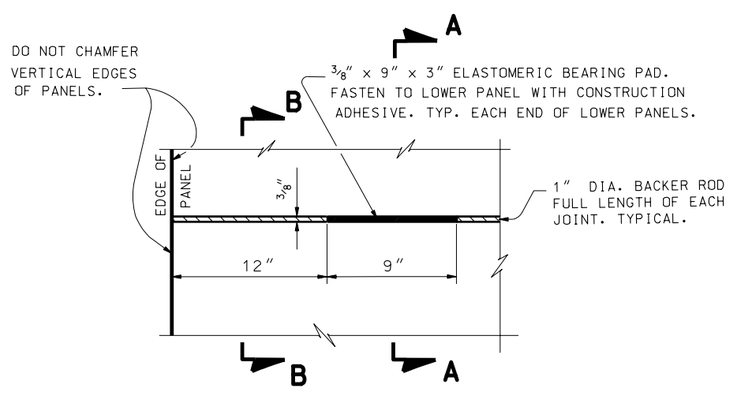

BEARING DETAIL

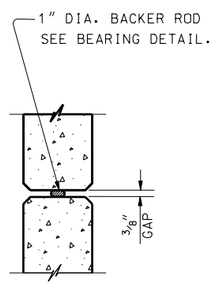

SECTION B-B

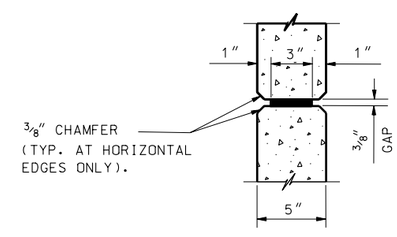

SECTION A-A

DESIGN DATA

AASHTO GUIDE SPECIFICATIONS FOR STRUCTURAL DESIGN OF SOUND BARRIERS.
CONCRETE CLASS 4A(AE) f'c= 5,000 psi; fs (REINF.)= 24,000 psi; n=8.
CONCRETE CLASS B(AE) f'c= 2,500 psi (FOR HOLES AROUND POSTS ONLY).

REVISIONS

NO.	DATE	APPR.	REMARKS

UTAH DEPARTMENT OF TRANSPORTATION
STANDARD DRAWINGS FOR ROAD AND BRIDGE CONSTRUCTION
SALT LAKE CITY, UTAH

RECOMMENDED FOR APPROVAL — JULY 03,2002 DATE
CHAIRMAN STANDARDS COMMITTEE APPROVED — JULY 03,2002 DATE
DEPUTY DIRECTOR

STANDARD DRAWING TITLE
PRECAST CONCRETE NOISE WALL 1 OF 2

STD DWG
SW 3A

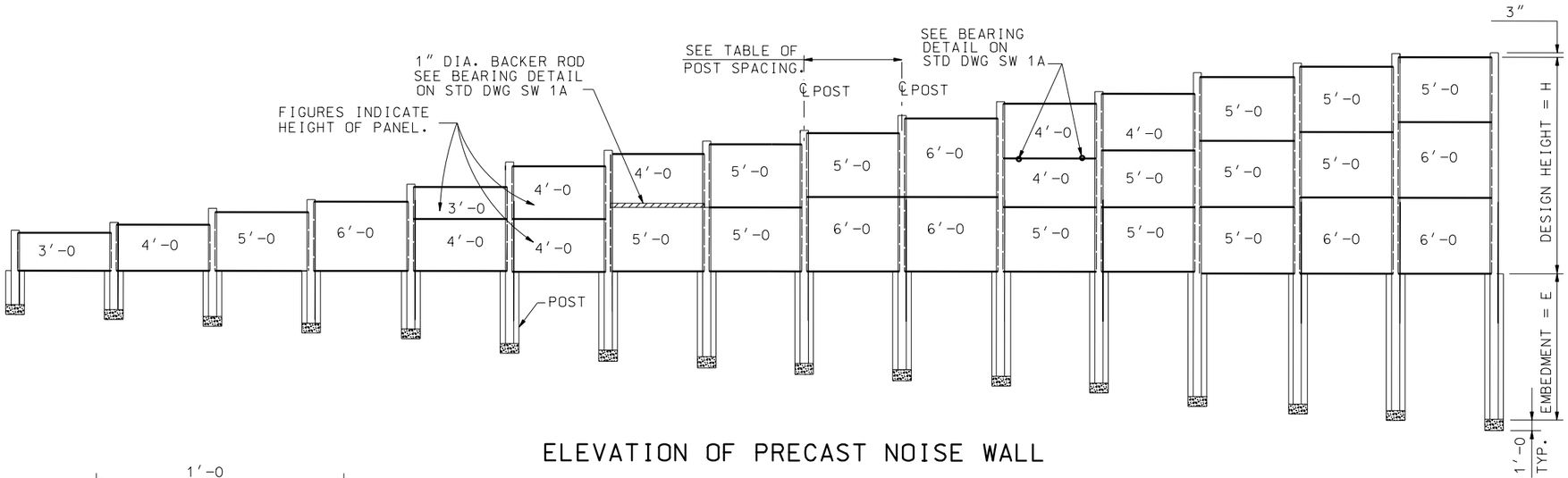

ELEVATION OF PRECAST NOISE WALL

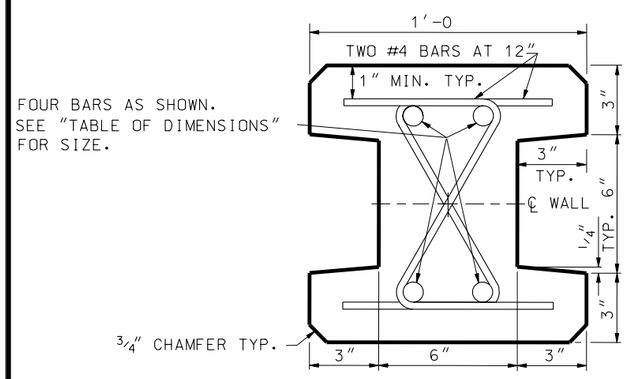

SECTION THRU TYPE I POST

θ = 0° TO °

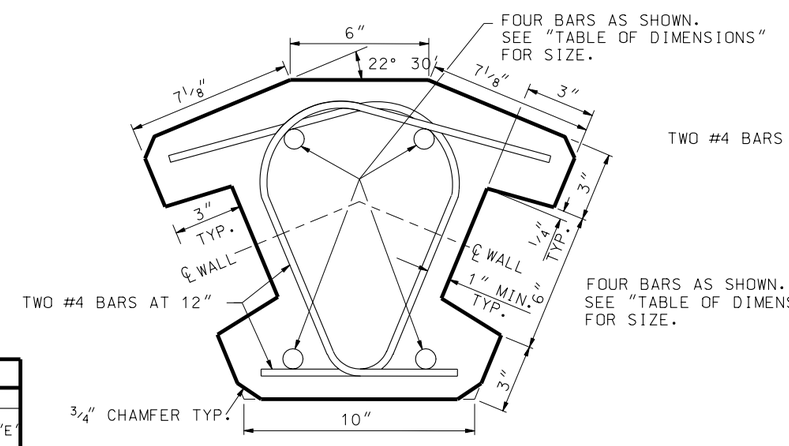

SECTION THRU TYPE II POST

FOR θ = 35° TO 55°

SIDE A

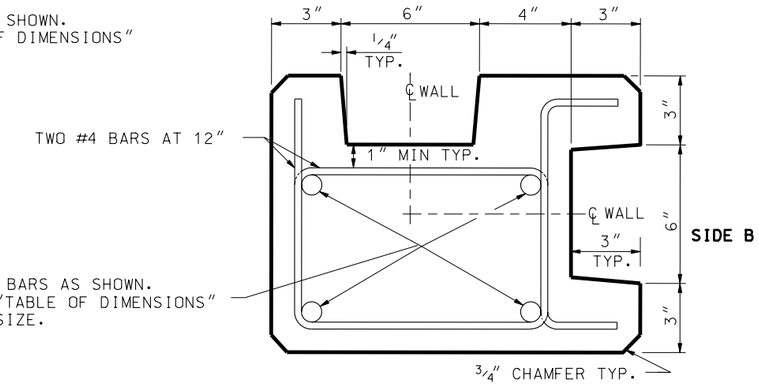

SECTION THRU TYPE III POST

θ= 80° TO 100°

TABLE OF DIMENSIONS					
DESIGN H	PANEL HEIGHT			POST	
H	TOP PANEL	CENTER PANEL	BOTTOM PANEL	VERTICAL BAR SIZE	EMBEDMENT "E"
3'	3'			#5	1'-6
4'	4'			#5	2'-0
5'	5'			#5	2'-6
6'	6'			#5	3'-0
7'	3'		4'	#5	3'-6
8'	4'		4'	#5	4'-0
9'	4'		5'	#5	4'-6
10'	5'		5'	#5	5'-0
11'	5'		6'	#6	5'-6
12'	6'		6'	#6	6'-0
13'	4'	4'	5'	#7	6'-6
14'	4'	5'	5'	#7	7'-0
15'	5'	5'	5'	#8	7'-6
16'	5'	5'	6'	#9	8'-0
17'	5'	6'	6'	#9	8'-6

POST SPACING	
℄ POST TO ℄ POST	REQ'D SPACING
TYPE I	12'-0
TYPE I TO TYPE II	12'-2
TYPE I TO TYPE III SIDE A	12'-0
TYPE I TO TYPE III SIDE B	12'-4
TYPE II TO TYPE II	12'-4
TYPE II TO TYPE III SIDE A	12'-2
TYPE II TO TYPE III SIDE B	12'-6
TYPE III SIDE A TO TYPE III SIDE A	12'-0
TYPE III SIDE A TO TYPE III SIDE B	12'-4
TYPE III SIDE B TO TYPE III SIDE B	12'-8

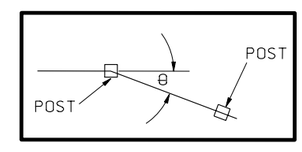

REVISIONS

NO.	DATE	APPR.	REMARKS

UTAH DEPARTMENT OF TRANSPORTATION

STANDARD DRAWINGS FOR ROAD AND BRIDGE CONSTRUCTION
SALT LAKE CITY, UTAH

RECOMMENDED FOR APPROVAL — JULY 03,2002 DATE

CHAIRMAN STANDARDS COMMITTEE APPROVED — JULY 03,2002 DATE

DEPUTY DIRECTOR

STANDARD DRAWING TITLE

PRECAST CONCRETE
NOISE WALL
2 OF 2

STD DWG
SW 3B

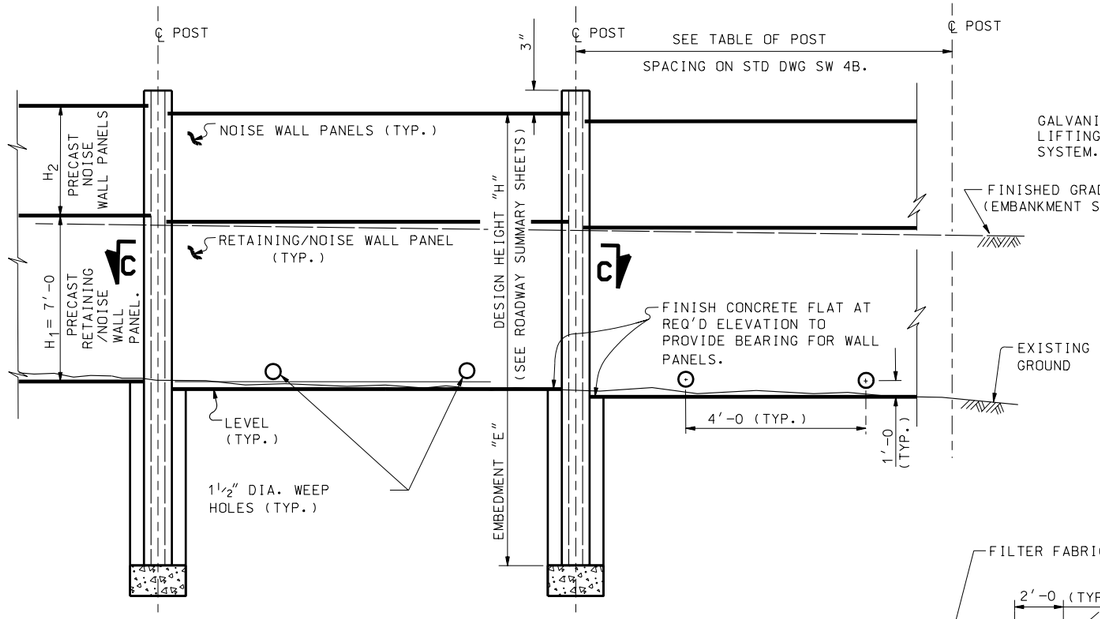

TYPICAL ELEVATION

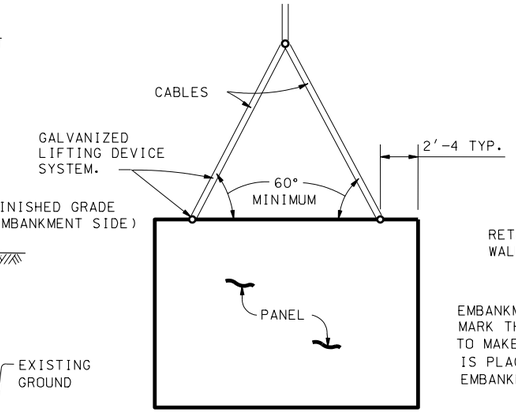

LIFTING DEVICE DETAIL

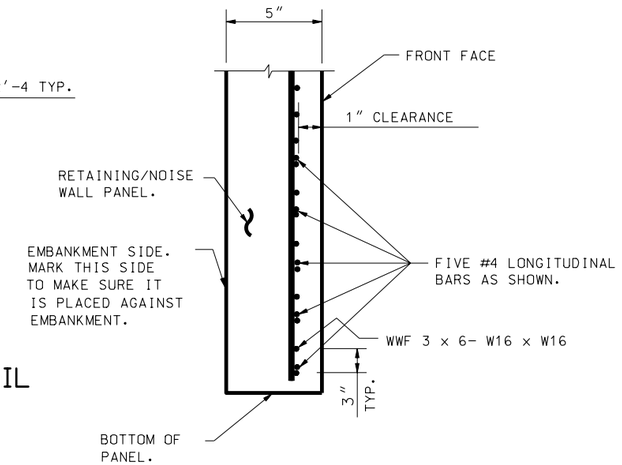

DETAIL "A"
(RETAINING/NOISE WALL PANEL ONLY)

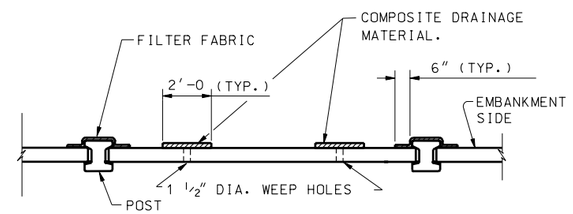

SECTION C-C

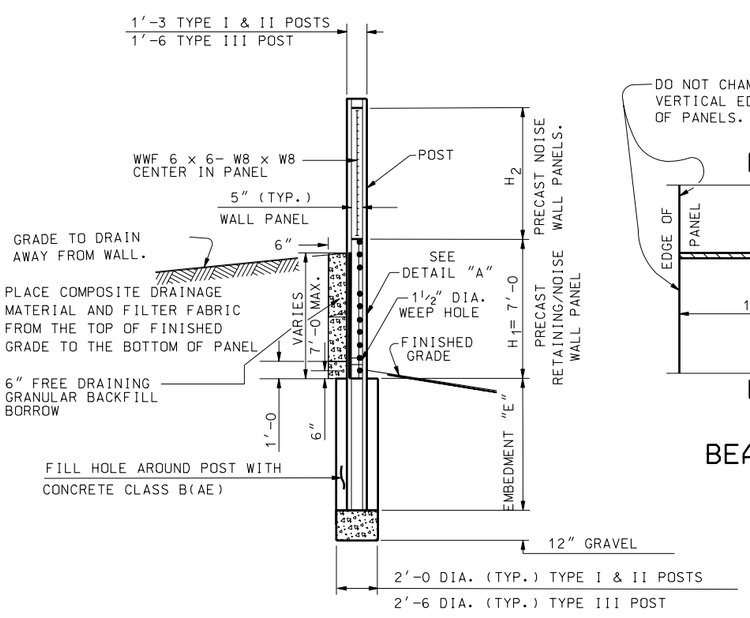

TYPICAL SECTION

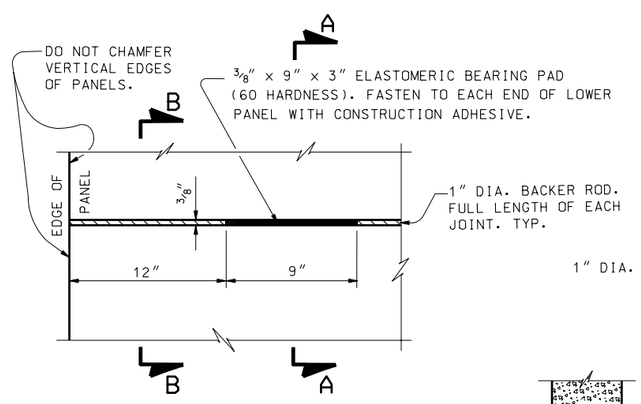

BEARING DETAIL

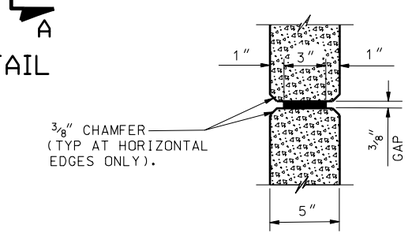

SECTION A-A

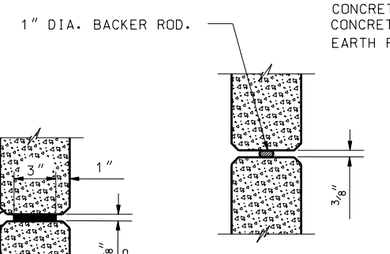

SECTION B-B

NOTES:

1. CHAMFER EXPOSED CONCRETE CORNERS AS SHOWN.
2. PROVIDE 2" COVER TO REINFORCING STEEL EXCEPT WHERE NOTED OTHERWISE.
3. SEE ROADWAY PLANS FOR LOCATION AND HEIGHT OF PRECAST RETAINING/NOISE WALL.
4. ALL PANELS ARE 12'-6" LONG AND 5" THICK.
5. SEE STD DWG SW 2 "NOISE WALL PLACEMENT AREA" FOR ADDITIONAL PLACEMENT INFORMATION.

DESIGN DATA

AASHTO GUIDE SPECIFICATIONS FOR STRUCTURAL DESIGN OF SOUND BARRIERS.
CONCRETE CLASS 4A(AE) f'c= 5,000 psi; fs (REINF.)= 24,000 psi; n=8.
CONCRETE CLASS B(AE) f'c= 2,500 psi (FOR HOLES AROUND POSTS ONLY)
EARTH PRESSURE = 36 lb./ft^3

NO.	DATE	APPR.	REMARKS

REVISIONS

UTAH DEPARTMENT OF TRANSPORTATION
STANDARD DRAWINGS FOR ROAD AND BRIDGE CONSTRUCTION
SALT LAKE CITY, UTAH

RECOMMENDED FOR APPROVAL — JULY 03,2002 DATE
CHAIRMAN STANDARDS COMMITTEE APPROVED — JULY 03,2002 DATE
DEPUTY DIRECTOR

PRECAST CONCRETE RETAINING/NOISE WALL 1 OF 2
STANDARD DRAWING TITLE

STD DWG
SW 4A

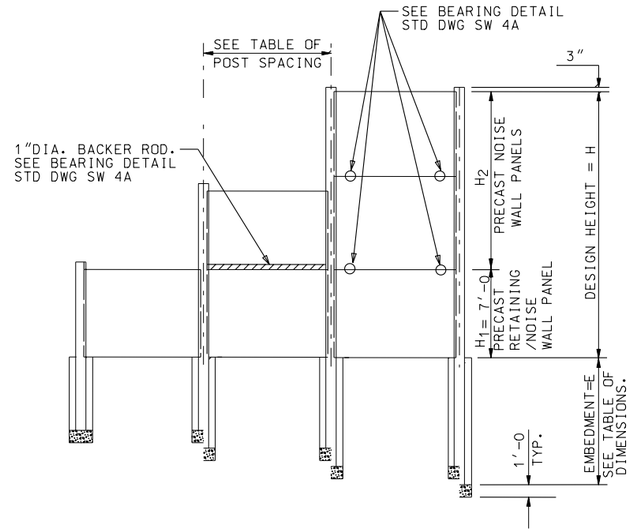

ELEVATION OF PRECAST RETAINING/NOISE WALL

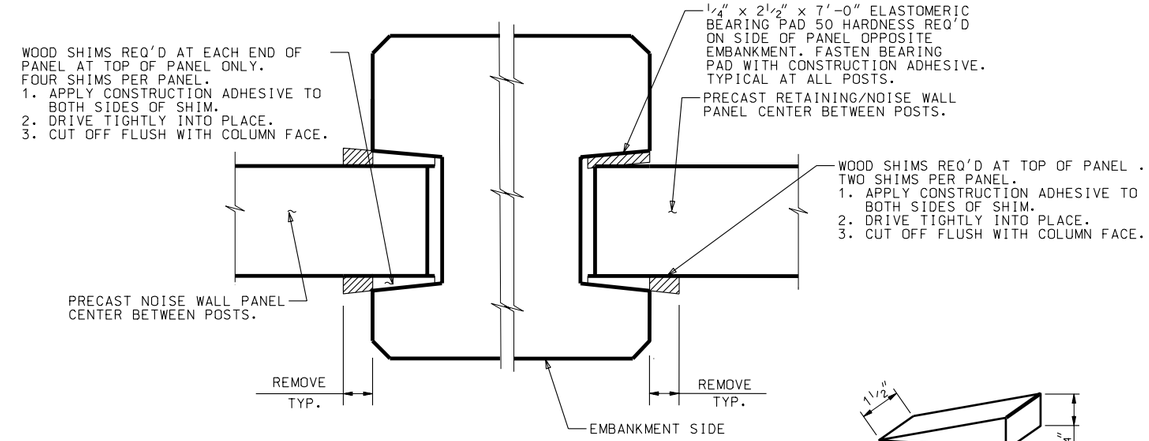

POST/PANEL DETAIL

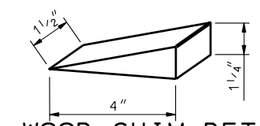

WOOD SHIM DETAIL

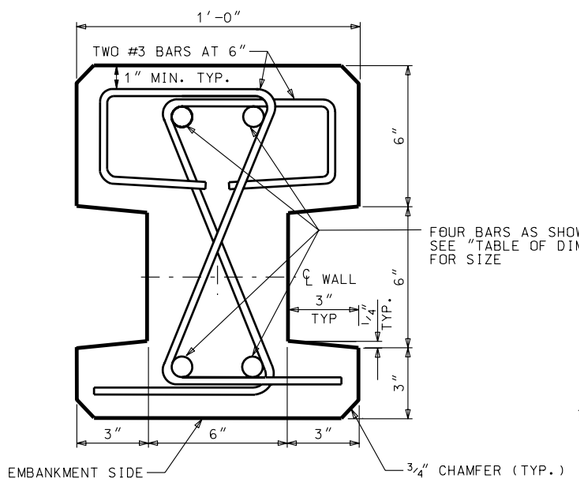

SECTION THRU TYPE I POST

θ=0° TO 10°

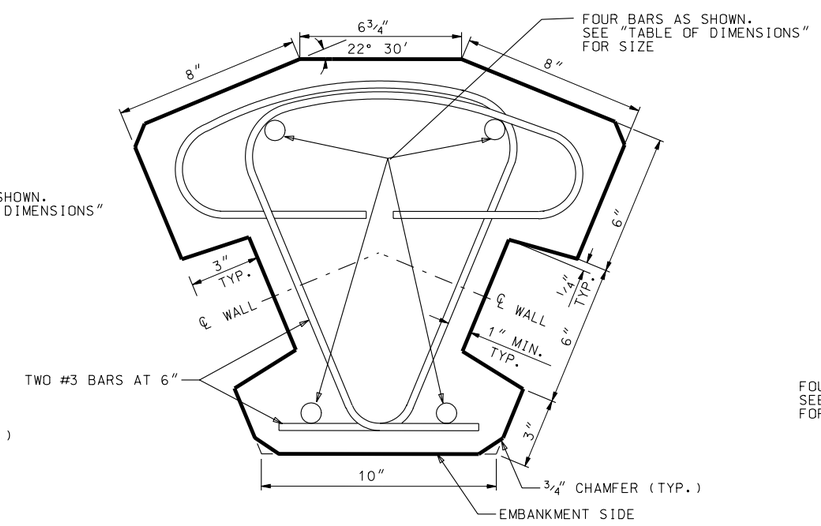

SECTION THRU TYPE II POST

θ=35° TO 55°

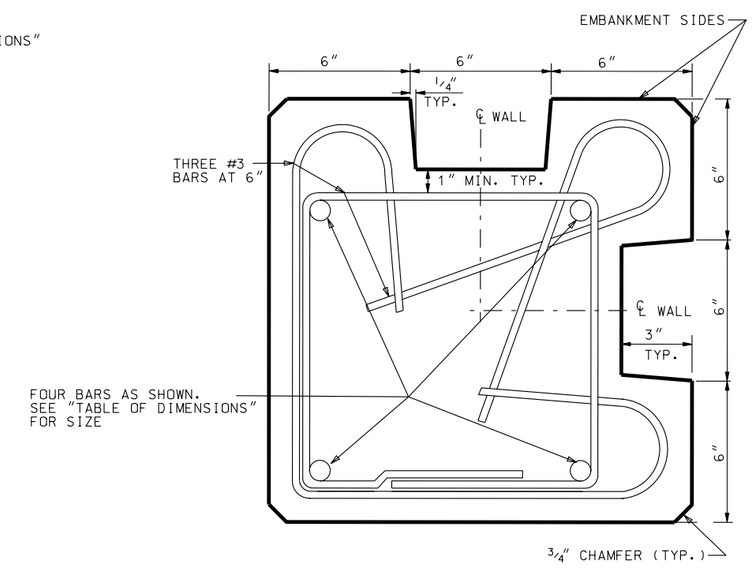

SECTION THRU TYPE III POST

θ=80° TO 100°

TABLE OF DIMENSIONS							
DESIGN H			PANEL HEIGHT			POST	
H_1 +	H_2	= H	TOP PANEL	CENTER PANEL	BOTTOM PANEL	VERTICAL BAR SIZE	EMBEDMENT "E"
7'		7'			7'	#7	4'-8
7'	3'	10'	3'		7'	#7	6'-8
7'	4'	11'	4'		7'	#7	7'-4
7'	5'	12'	5'		7'	#7	8'-0
7'	6'	13'	6'		7'	#7	8'-8
7'	7'	14'	3'	4'	7'	#8	9'-4
7'	8'	15'	4'	4'	7'	#8	10'-0
7'	9'	16'	4'	5'	7'	#8	10'-8
7'	10'	17'	5'	5'	7'	#9	11'-4
7'	11'	18'	5'	6'	7'	#9	12'-0
7'	12'	19'	6'	6'	7'	#9	12'-8

POST SPACING	
℄ POST TO ℄ POST	REQ'D SPACING
TYPE I TO TYPE I	12'-0
TYPE I TO TYPE II	12'-2
TYPE I TO TYPE III	12'-3
TYPE II TO TYPE II	12'-4
TYPE II TO TYPE III	12'-5

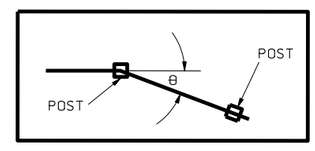

REVISIONS

NO.	DATE	APPR.	REMARKS

UTAH DEPARTMENT OF TRANSPORTATION
STANDARD DRAWINGS FOR ROAD AND BRIDGE CONSTRUCTION
SALT LAKE CITY, UTAH

RECOMMENDED FOR APPROVAL — JULY 03,2002 DATE

CHAIRMAN STANDARDS COMMITTEE APPROVED — JULY 03,2002 DATE

DEPUTY DIRECTOR

PRECAST CONCRETE RETAINING/NOISE WALL 2 OF 2

STANDARD DRAWING TITLE

STD DWG

SW 4B

TYPE I

TYPE II

BARRICADES

NOTES 1, 2

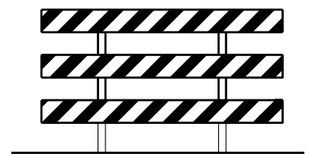

TYPE III

NOTE 2

ADVANCE WARNING ARROW PANELS

SEE NOTE 3

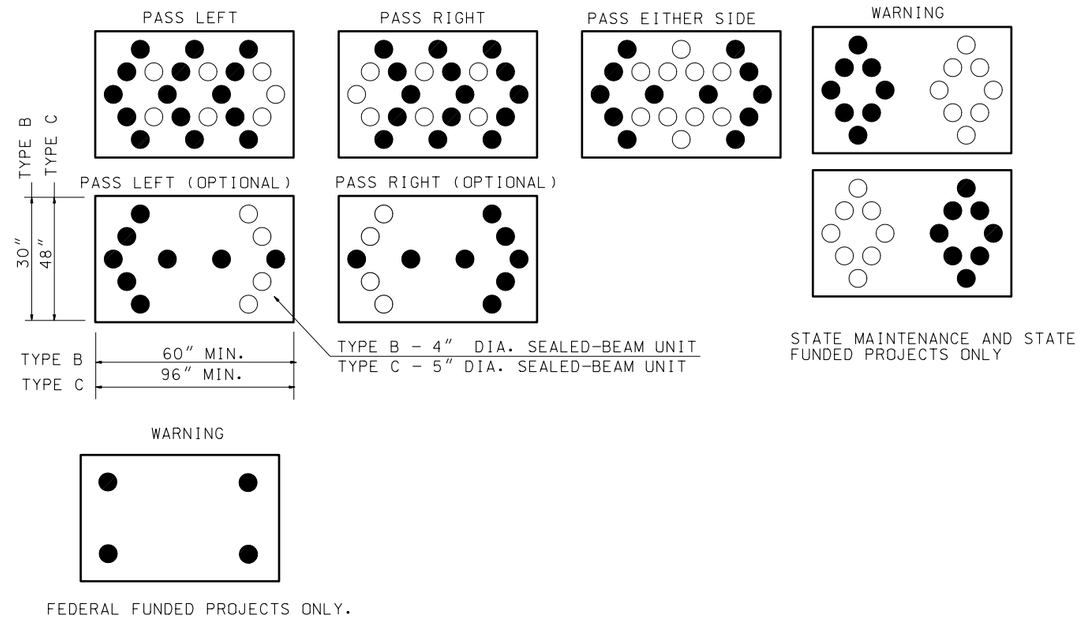

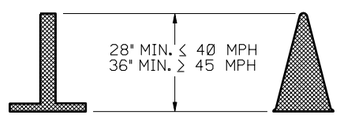

TUBULAR MARKERS

DAYLIGHT HOURS ONLY

CONES

DAYLIGHT HOURS ONLY

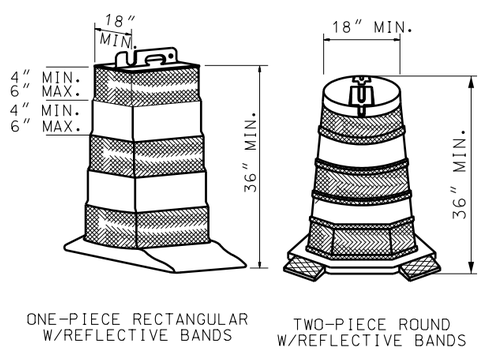

PLASTIC DRUMS

SEE NOTE 4

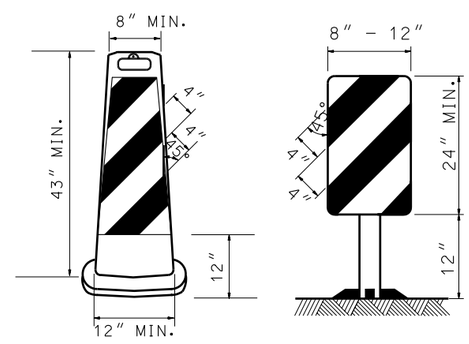

VERTICAL PANELS

SEE NOTE 1

NOTES:

1. A MINIMUM OF 270 SQUARE INCHES OF RETROREFLECTIVE MATERIAL PLACED A MINIMUM OF 12 INCHES ABOVE THE ROADWAY SURFACE IS REQUIRED ON BARRICADES AND VERTICAL PANELS WHEN USED ON THE INTERSTATE OR ROADWAYS WITH A POSTED SPEED OF GREATER THAN 45 MPH. PLACE BARRICADES AND VERTICAL PANELS IN SUCH A MANNER THAT THEY ARE VISIBLE TO APPROACHING TRAFFIC.
2. USE SANDBAGS WITH SAND OR OTHER COMPARABLE SOFT MATERIAL AS BALLAST. DO NOT PLACE BALLAST HIGHER THAN 12 INCHES ABOVE THE ROADWAY AND DO NOT COVER ANY REFLECTIVE AREA OF RAILS OR SIGNS.
3. PLACE THE BOTTOM EDGE OF THE ADVANCE WARNING ARROW PANELS A MINIMUM OF 7 FEET ABOVE THE ROADWAY SURFACE.
4. USE PLASTIC DRUMS AS LANE CLOSURE TAPER DEVICES FOR SPEEDS 50 MPH AND GREATER.

REVISIONS

NO.	DATE	APPR.	REMARKS

UTAH DEPARTMENT OF TRANSPORTATION
STANDARD DRAWINGS FOR ROAD AND BRIDGE CONSTRUCTION
SALT LAKE CITY, UTAH

RECOMMENDED FOR APPROVAL — JULY 03,2002 DATE

CHAIRMAN STANDARDS COMMITTEE APPROVED — JULY 03,2002 DATE

DEPUTY DIRECTOR

CONSTRUCTION ZONE CHANNELIZATION DEVICES

STANDARD DRAWING TITLE

STD DWG

TC 1A

NOTES 1, 5

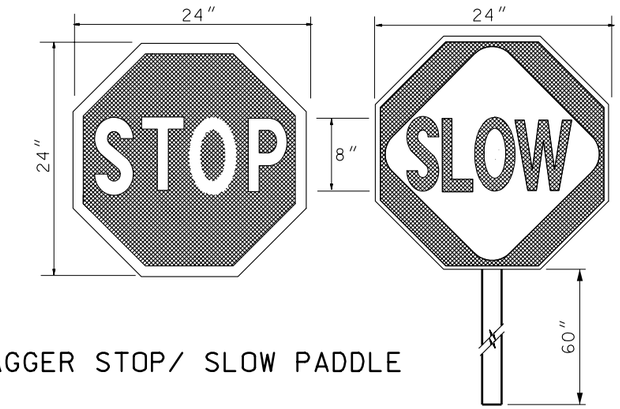

FLAGGER STOP/ SLOW PADDLE

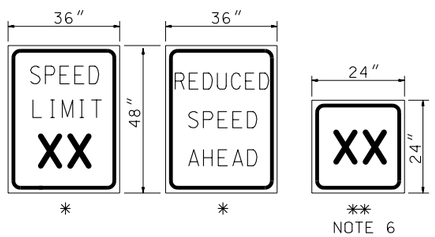

REDUCED SPEED SIGNING

* REGULATORY - BLACK/WHITE
** ADVISORY - BLACK/ORANGE
XX SPEED

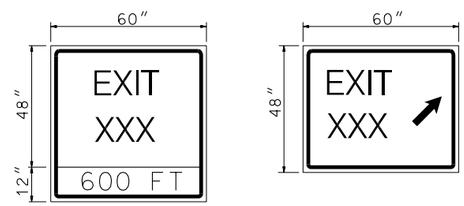

EXIT RAMP SIGNING

BLACK/ORANGE
XXX EXIT NUMBER

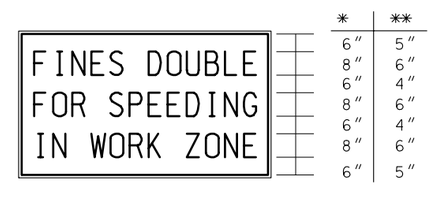

FINES DOUBLE SIGN
– LONG TERM APPLICATION

* 84" X 48" FREEWAY
** 60" X 36" CONVENTIONAL HIGHWAYS
USE SERIES "C" STANDARD HIGHWAYS ALPHABET
BLACK/ORANGE

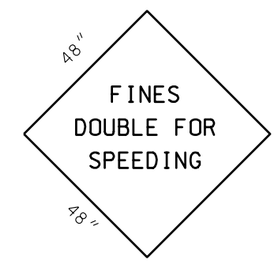

FINES DOUBLE SIGN
– SHORT TERM APPLICATION

USE 7" SERIES "C" STANDARD HIGHWAY ALPHABET
USE ON RAMPS AND SIDE STREET APPROACHES
BLACK/ORANGE

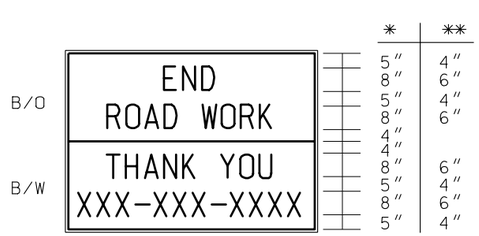

CONSTRUCTION ZONE
INFORMATION SIGN

* 84" X 60" FREEWAY
** 60" X 48" CONVENTIONAL HIGHWAYS
USE SERIES "C" STANDARD HIGHWAYS ALPHABET
XXX CONTRACTOR'S PHONE NUMBER

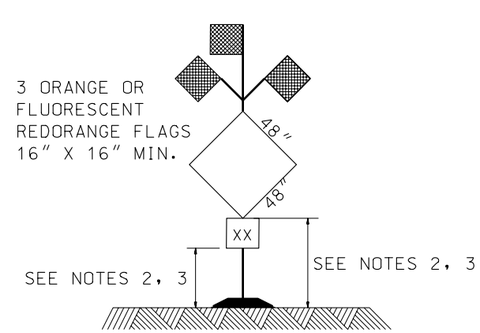

TYP. SIGN INSTALLATION
WITH FLAGS

SEE NOTES 4, 5

NOTES

1. CLOSE ROADWAYS WITH TYPE III BARRICADES. EXTEND THE BARRICADES ACROSS INTENDED ROAD CLOSURE A MINIMUM OF 3/4 OF THE ROADWAY STARTING FROM THE CENTER OF THE ROADWAY AND EXTENDING IN BOTH DIRECTIONS TOWARD THE SHOULDERS. PLACE A "ROAD CLOSED" SIGN (R11-2) OVER THE CENTER LINE AND THE APPROPRIATE "DETOUR" ARROW SIGNS (M4-10 L OR R) ON EACH SIDE OF THE "ROAD CLOSED" SIGN. DETOUR ARROWS ARE NOT REQUIRED IF DETOUR IS NOT AT ROAD CLOSURE.
2. SIGNS ON PORTABLE STANDS REQUIRE A 12 INCH MINIMUM MOUNTING HEIGHT.
3. SIGNS ON PORTABLE STANDS PLACED AMONG CHANNELIZING DEVICES REQUIRE A 36 INCH MINIMUM MOUNTING HEIGHT.
4. SIGNS USING POST TYPES P1,P2 OR P3 REQUIRE A MINIMUM 84 INCHES MOUNTING HEIGHT FROM ROADWAY SURFACE. REFER TO SN SERIES STANDARD DRAWINGS.
5. PLACE TWO ORANGE STRIPS OF REFLECTIVE SHEETING, 4 INCHES X 24 INCHES, VERTICALLY, 12 INCHES FROM THE RIGHT AND LEFT CORNERS ON THE BACK OF SIGNS USED WITH PORTABLE STANDS. USE THE SAME GRADE OF REFLECTIVE SHEETING AS USED ON THE FRONT OF THE SIGN.
6. USE SANDBAGS WITH SAND OR OTHER COMPARABLE SOFT MATERIAL AS BALLAST. DO NOT PLACE BALLAST HIGHER THAN 12 INCHES ABOVE THE ROADWAY AND DO NOT COVER ANY REFLECTIVE AREA OF RAILS OR SIGNS.
7. PLACE ADVISORY SPEED LIMIT SIGNS ONLY IN COMBINATION WITH AND BELOW A WARNING SIGN.

REVISIONS

NO.	DATE	APPR.	REMARKS

UTAH DEPARTMENT OF TRANSPORTATION
STANDARD DRAWINGS FOR ROAD AND BRIDGE CONSTRUCTION
SALT LAKE CITY, UTAH

RECOMMENDED FOR APPROVAL — JULY 03,2002 DATE
CHAIRMAN STANDARDS COMMITTEE APPROVED — JULY 03,2002 DATE
DEPUTY DIRECTOR

STANDARD DRAWING TITLE
CONSTRUCTION ZONE SIGNING

STD DWG
TC 1B

HAZARD MITIGATION

1. USE CONSTRUCTION CLEAR ZONE DISTANCE IDENTIFIED IN TABLE 1 TO MITIGATE THE FOLLOWING HAZARDS.
   HAZARDS
   A. NON-WORKING EQUIPMENT OR VEHICLES
   B. STOCKPILED MATERIAL
   C. WORKING VEHICLES AND WORKERS (NON-FLAGGERS)
   D. OTHER OBJECTS AND FEATURES (IE: BRIDGE PARAPETS, BARRIER BLUNT ENDS, POLES)
   E. VERTICAL DROP-OFF LESS THAN 48 INCHES OR SLOPES STEEPER THAN 4:1
2. MITIGATE ALL OTHER HAZARDS OR DROP-OFFS GREATER THAN 48 INCHES WITHIN AASHTO CLEAR ZONE AS APPROVED BY THE REGION TRAFFIC ENGINEER.

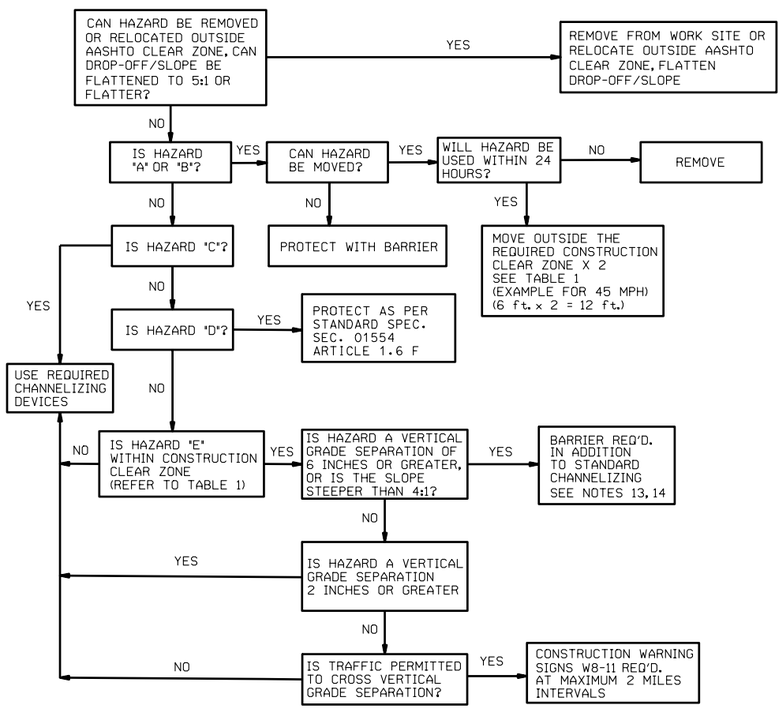

DETAIL AA

NOTES:

1. USE CURRENT EDITION OF UDOT STANDARDS AND MUTCD FOR TRAFFIC CONTROL.
2. SEE STD DWG TC 1A AND TC 1B FOR CONSTRUCTION ZONE SIGNING AND DEVICE REQUIREMENT.
3. COVER OR REMOVE NON-APPLICABLE SIGNING, BOTH EXISTING AND CONSTRUCTION SIGNS. REMOVE NON-APPLICABLE PAVEMENT MARKINGS.
4. REMOVE NON-APPLICABLE PORTABLE SIGNS OR MOVE BEYOND A DISTANCE TWICE THAT OF THE CONSTRUCTION CLEAR ZONE. (SEE TABLE 1 AND DETAIL AA).
5. REFER TO STANDARD SPECIFICATION 01554, ARTICLE 3.5A, FOR FLAGGING REQUIREMENT FOR OPERATING TRAFFIC SIGNALS.
6. USE A FULL LANE CLOSURE WHEN WORK ENCROACHES INTO A TRAFFIC LANE, UNLESS THE TRAFFIC LANE CAN BE RECREATED.
7. CLEAN AND RESTORE PAVEMENT MARKINGS AT THE END OF EACH DAY'S OPERATION, BOTH ON AND OFF THE PROJECT, THAT ARE OBSCURED BY WORK OPERATIONS.
8. LIMIT ADVISORY AND REGULATORY SPEED REDUCTION OF 10 MPH, WITH THE APPROVAL FROM THE ENGINEER. FOR REDUCTIONS EXCEEDING 10 MPH, OBTAIN APPROVAL FROM THE REGION TRAFFIC ENGINEER. USE SPEED REDUCTIONS ONLY DURING IMPACTED TIMES AND AREAS. RESTORE REGULATORY SPEED LIMIT AT LOCATIONS WHERE TRAFFIC IS NOT BEING IMPACTED BY CONSTRUCTION ACTIVITIES.
9. USE THE POSTED SPEED LIMIT PRIOR TO CONSTRUCTION TO COMPUTE THE SIGN SPACING, TAPER LENGTH, BUFFER ZONE, AND CONSTRUCTION CLEAR ZONE DISTANCE. USE THE POSTED SPEED LIMIT DURING CONSTRUCTION TO DETERMINE THE TANGENT SPACING FOR CHANNELIZING DEVICES.
10. USE PLASTIC DRUMS FOR LANE CLOSURE TAPER DEVICES FOR SPEEDS 50 MPH AND GREATER.
11. USE DOWNSTREAM TAPER FOR OPERATIONS LONGER THAN 3 DAYS.
12. PLACE ADVANCE WARNING ARROW PANEL IN THE FIRST 1/3 OF THE TAPER.
13. USE AN APPROVED CONSTRUCTION ZONE ATTENUATOR WITH TEMPORARY PRECAST CONCRETE BARRIER WHEN APPROACH ENDS ARE WITHIN AASHTO CLEAR ZONE. DO NOT USE A TRUCK MOUNTED ATTENUATOR FOR ANY PERIOD LONGER THAN 24 HOURS.
14. USE PROPER LENGTH OF NEED FOR TEMPORARY BARRIER AS PER THE REQUIREMENTS OF THE CURRENT EDITION OF THE ROADSIDE DESIGN GUIDE. USE POSTED SPEED LIMIT PRIOR TO THE CONSTRUCTION ZONE FOR THE DESIGN OF THE REQUIRED LENGTH OF NEED. USE TABLE 2 FOR THE CONSTRUCTION ZONE FLARE RATE REQUIREMENT FOR TEMPORARY BARRIER. APPROVAL FROM THE REGION TRAFFIC ENGINEER IS REQUIRED FOR MODIFICATION TO THE REQUIRED FLARE RATE.

TABLE 1
CONSTRUCTION CLEAR ZONE

MPH	feet
40 & LESS	3
45	6
50	6.5
55	7.5
60	8
65	8.5
70	9
75	10.5

TABLE 2
CONSTRUCTION ZONE FLARE RATES
TEMPORARY BARRIER

MPH	FLARE
≥70	20:1
65	18:1
60	17:1
55	16:1
50	14:1
45	10:1
≤40	6:1

REVISIONS

NO.	DATE	APPR.	REMARKS

UTAH DEPARTMENT OF TRANSPORTATION
STANDARD DRAWINGS FOR ROAD AND BRIDGE CONSTRUCTION
SALT LAKE CITY, UTAH

RECOMMENDED FOR APPROVAL — JULY 03,2002 DATE
CHAIRMAN STANDARDS COMMITTEE — JULY 03,2002 DATE
DEPUTY DIRECTOR

TRAFFIC CONTROL GENERAL
STANDARD DRAWING TITLE

STD DWG
TC 2A

TAPER, BUFFER ZONE & SIGN SPACING CHART

	POSTED SPEED MPH(S)	MINIMUM TAPER LENGTH(L)	LENGTH OF BUFFER(BZ)	MINIMUM SIGN SPACING(SS)			ONE LANE TWO-WAY FLAGGING
		12' LANE CLOSURE	DESIRABLE	A	B	C	TAPER LENGTH
		feet	feet	feet	feet	feet	feet
NON INTER STATE	30 AND LOWER	180	100	100	100	100	50
	35	245	120	350	350	350	
	40	320	165				
	45	540	220	500	500	500	100
	50	600	280				
	55	660	335				
	60	720	415				
	65	780	485				
INTER STATE	65	780	485	1000	1500	2640	
	70	840	600				
	75	900	700				

1- TAPER FORMULAS

A) LANE TAPER LENGTH IN FEET

$L = SW \geq$ 45 MPH $\quad L = \frac{WS^2}{60} \leq$ 40 MPH

1/3 L = FOR SHOULDER CLOSURE TAPER

1/2 L = FOR LANE SHIFT TAPER

WHERE L = TAPER LENGTH

W = WIDTH OF CLOSURE OR SHIFT

S = POSTED SPEED

2- CHANNELIZING DEVICES

A) USE A MINIMUM OF 1 DEVICE PER FOOT OF LANE CLOSURE, PLUS 1 ADDITIONAL DEVICE TO START.

B) ON TANGENT: S X 2 = SPACING UP TO 100 FEET MAXIMUM.

C) LENGTH OF BUFFER ZONE (BZ) IS THE DISTANCE FROM END OF LANE CLOSURE TAPER TO WORK AREA, OR ANY OBSTRUCTION PRIOR TO WORK AREA.

TRAFFIC CONTROL DEVICE LEGEND

- SIGN (PORTABLE OR FIXED)
- CHANNELIZING DEVICE (SEE STD DWG TC 1)
- PLASTIC DRUMS
- FLAGGING STATION
- ADVANCE WARNING ARROW PANEL
- BARRIER
- DIRECTION OF TRAFFIC
- TYPE III BARRICADE
- DIRECTION OF WORK VEHICLE

REDUCED SPEED WORK ZONE SIGNING

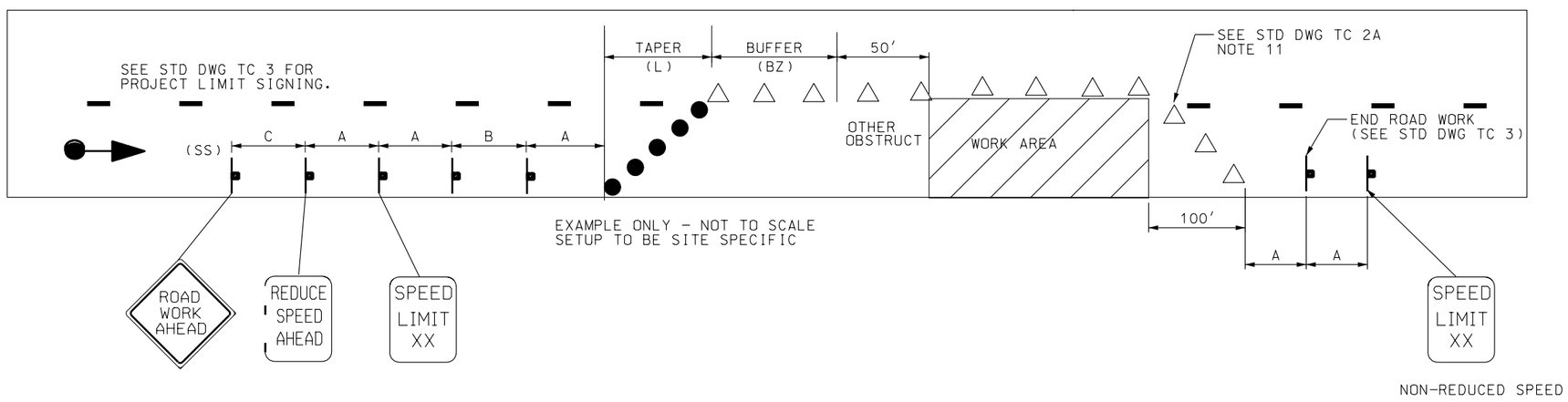

STANDARD WORK ZONE SIGNING

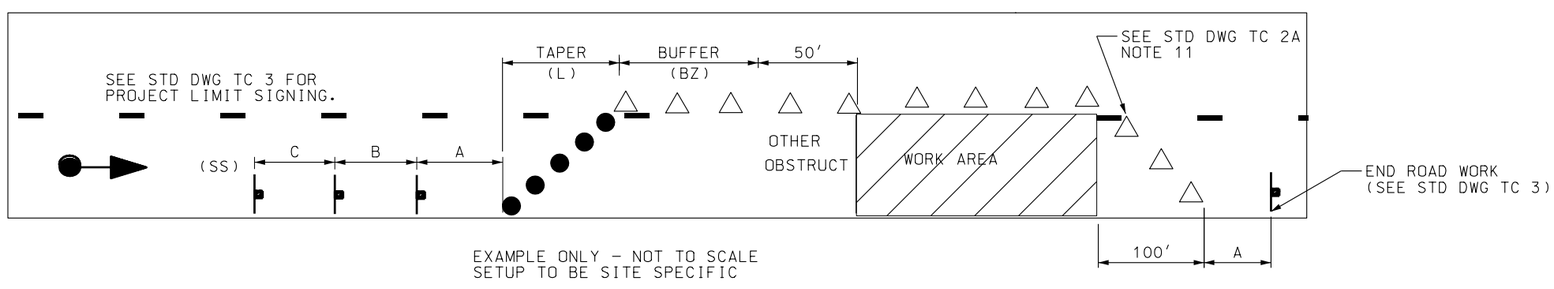

NO.	DATE	APPR.	REMARKS

REVISIONS

UTAH DEPARTMENT OF TRANSPORTATION
STANDARD DRAWINGS FOR ROAD AND BRIDGE CONSTRUCTION
SALT LAKE CITY, UTAH

RECOMMENDED FOR APPROVAL — JULY 03,2002 DATE

CHAIRMAN STANDARDS COMMITTEE APPROVED — JULY 03,2002 DATE

DEPUTY DIRECTOR

STANDARD DRAWING TITLE: TRAFFIC CONTROL GENERAL

STD DWG TC 2B

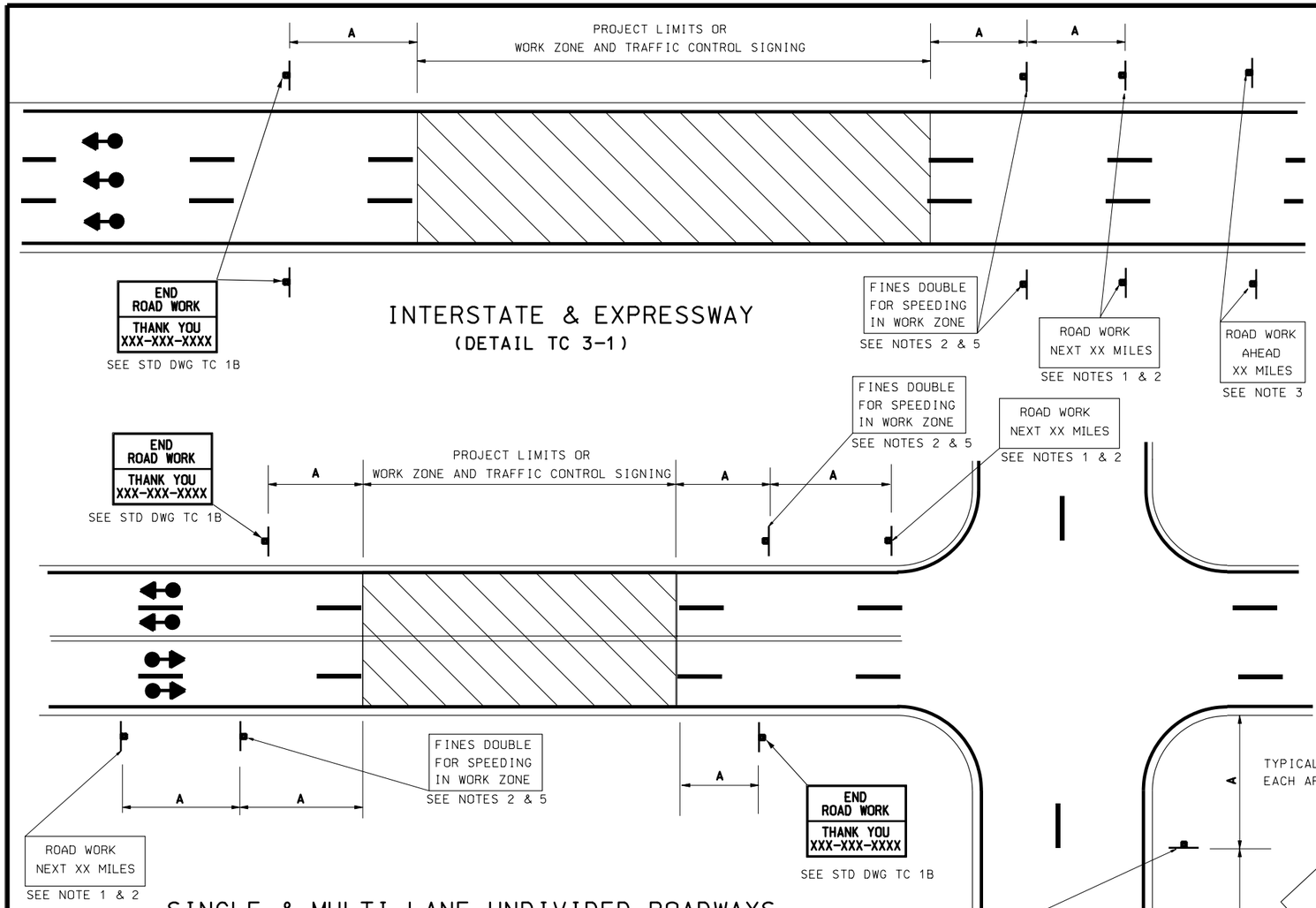

INTERSTATE & EXPRESSWAY
(DETAIL TC 3-1)

SINGLE & MULTI LANE UNDIVIDED ROADWAYS
(SIGN SEQUENCING REQUIRED IN BOTH DIRECTIONS)
(DETAIL TC 3-2)

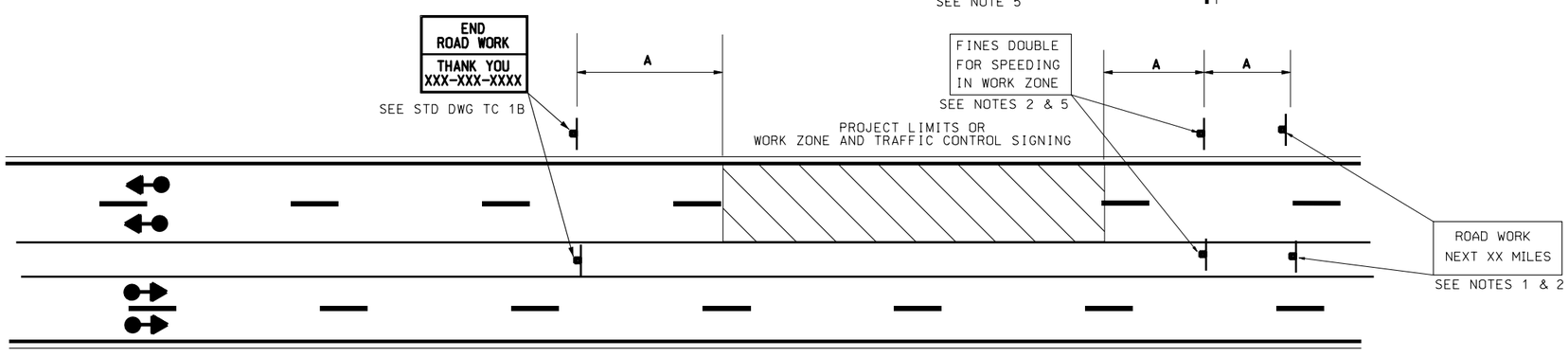

DIVIDED ROADWAYS IN URBANIZED
(DETAIL TC 3-3)

NOTES:

1. USE "ROAD WORK NEXT __ MILES" SIGN G20-1, WHEN TRAFFIC CONTROL IS GREATER THAN 2 MILES IN LENGTH.
2. PLACE " ROAD WORK AHEAD" SIGN AHEAD OF THE "FINES DOUBLE FOR SPEEDING IN WORK ZONE" SIGN WHEN THE "ROAD WORK NEXT __ MILES" IS NOT USED.
3. PLACE "ROAD WORK AHEAD __ MILES" SIGN AT ROUTE SEPARATION POINT IF AN ALTERNATE ROUTE IS AVAILABLE AND SIGNIFICANT DELAYS ARE EXPECTED.
4. USE PROJECT LIMIT SIGNING IN BOTH DIRECTIONS IF TRAFFIC CONTROL AFFECTS TRAFFIC IN BOTH DIRECTIONS.
5. "FINES DOUBLE FOR SPEEDING IN WORK ZONE" SIGN IS OPTIONAL. SEE STD DWG TC 1B.
6. WHEN REDUCED SPEEDS AND/OR "FINES DOUBLE" OPTION IS USED, "FINES DOUBLE" SIGNING AND SPEED LIMIT SIGNING ARE REQUIRED AT ALL INTERCHANGES WITHIN THE PROJECT.
7. PLACE SIGNING ON RIGHT SHOULDER AND MEDIAN WHEN CONDITIONS PERMIT.
8. SEE STD DWG TC 2B FOR TAPER, BUFFER ZONE, AND SIGN SPACING CHART.

REVISIONS				
NO.	DATE	APPR.	REMARKS	

UTAH DEPARTMENT OF TRANSPORTATION
STANDARD DRAWINGS FOR ROAD AND BRIDGE CONSTRUCTION
SALT LAKE CITY, UTAH

RECOMMENDED FOR APPROVAL — JULY 03,2002 DATE

CHAIRMAN STANDARDS COMMITTEE APPROVED — JULY 03,2002 DATE

DEPUTY DIRECTOR

STANDARD DRAWING TITLE: TRAFFIC CONTROL PROJECT LIMIT SIGNING

STD DWG
TC 3

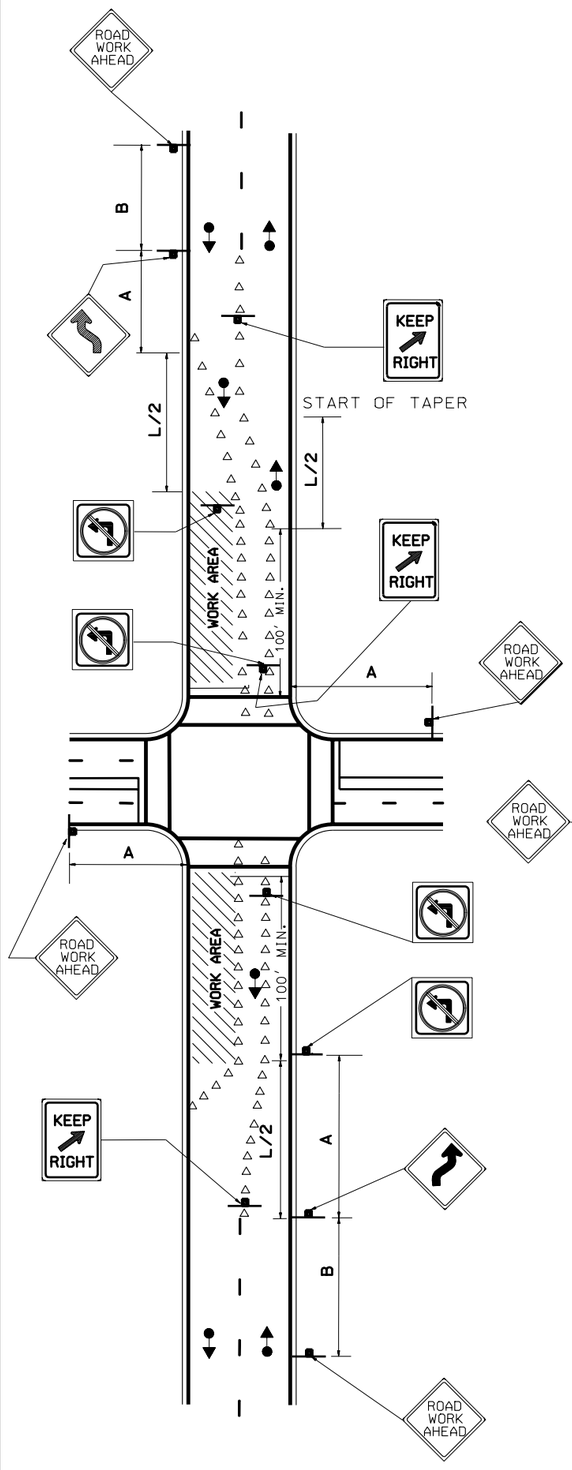

(DETAIL TC 4-1)

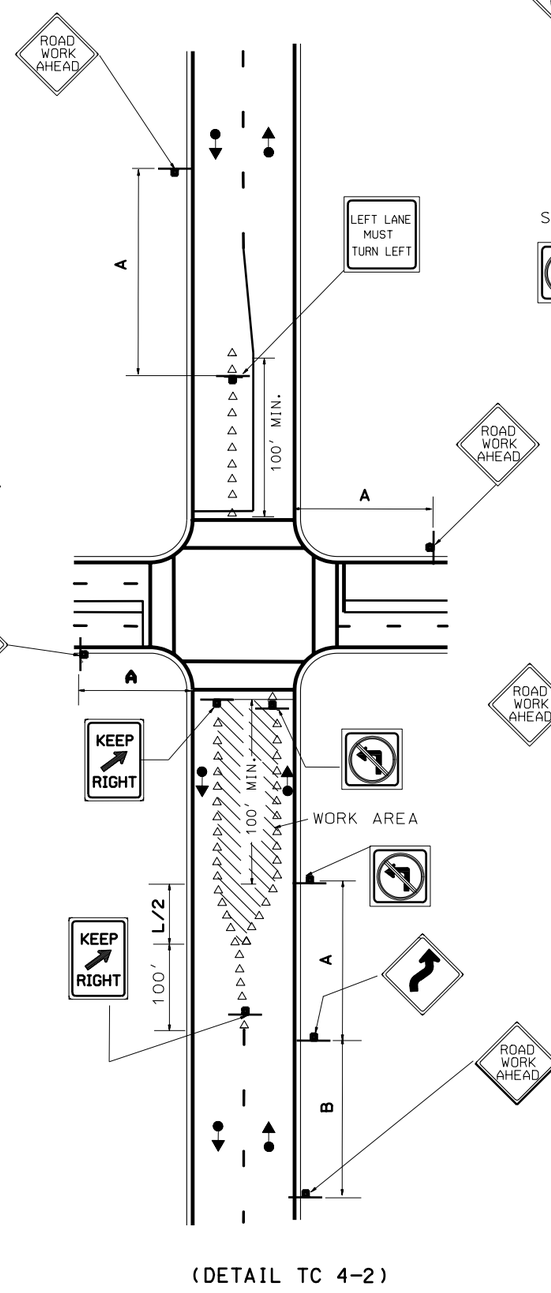

(DETAIL TC 4-2)

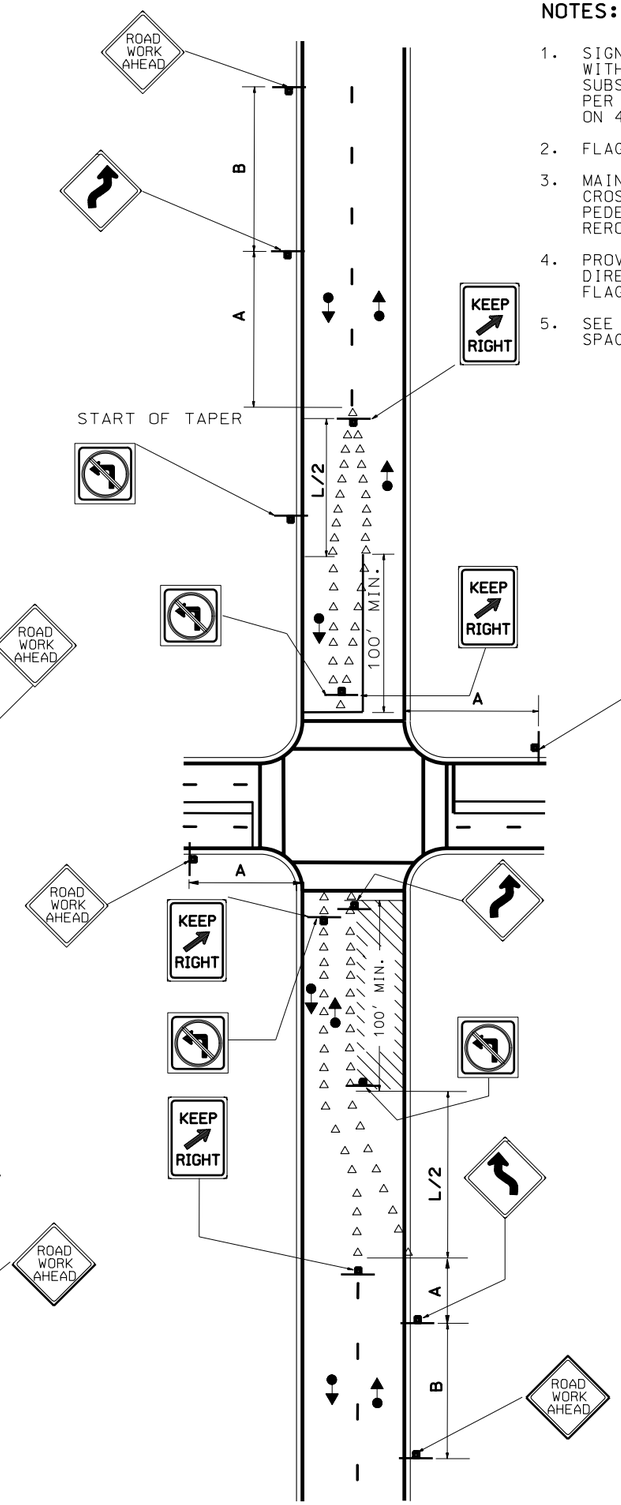

(DETAIL TC 4-3)

NOTES:

1. SIGNING AND DEVICES SHOWN FOR 2 LANE ROADWAY WITH NO REDUCTION IN NUMBER OF LANES. SUBSTITUTE ADVANCE SIGNING AND DEVICES AS PER TYPICAL LANE CLOSURE. FOR LANE REDUCTION ON 4 LANES OR GREATER SEE STD DWG TC 8 OR TC 5
2. FLAGGING IS OPTIONAL WITH LANE CLOSURE.
3. MAINTAIN PEDESTRIAN TRAFFIC AT EXISTING CROSSWALKS AND ON EXISTING SIDEWALKS. WHEN PEDESTRIAN TRAFFIC CANNOT BE MAINTAINED REROUTE ACCORDING TO STD DWG TC 6.
4. PROVIDE A MINIMUM 10' TRAFFIC LANE IN EACH DIRECTION. IF THIS CANNOT BE DONE USE A FLAGGING OPERATION AS PER STD DWG TC 14
5. SEE STD DWG TC 2B FOR TAPER, BUFFER, AND SIGN SPACING CHART.

LANE SHIFT FOR URBAN INTERSECTIONS

REVISIONS			
NO.	DATE	APPR.	REMARKS

UTAH DEPARTMENT OF TRANSPORTATION
STANDARD DRAWINGS FOR ROAD AND BRIDGE CONSTRUCTION
SALT LAKE CITY, UTAH

RECOMMENDED FOR APPROVAL — JULY 03,2002 DATE

CHAIRMAN STANDARDS COMMITTEE APPROVED — JULY 03,2002 DATE

DEPUTY DIRECTOR

TRAFFIC CONTROL
URBAN INTERSECTION
WITH ROADWAYS UNDER
50 MPH

STANDARD DRAWING TITLE

STD DWG
TC 4

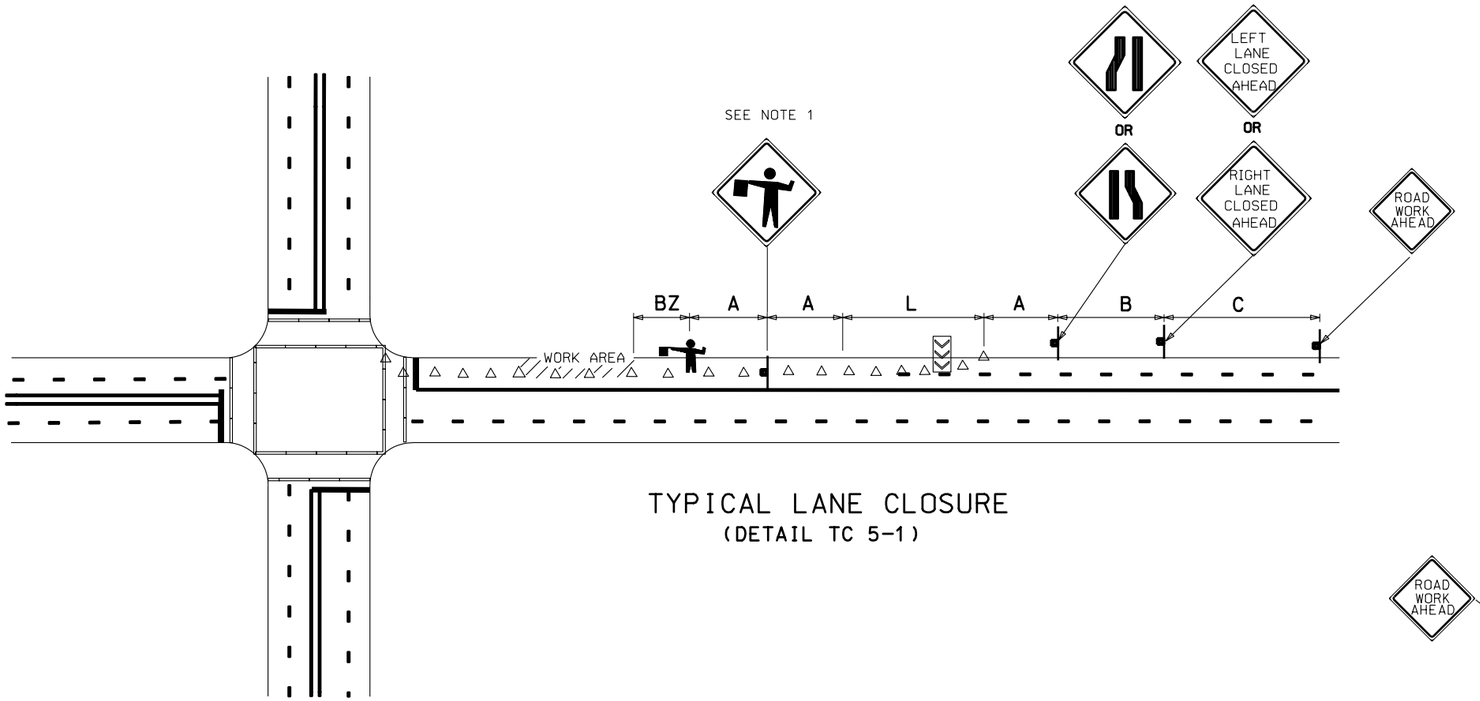

TYPICAL LANE CLOSURE
(DETAIL TC 5-1)

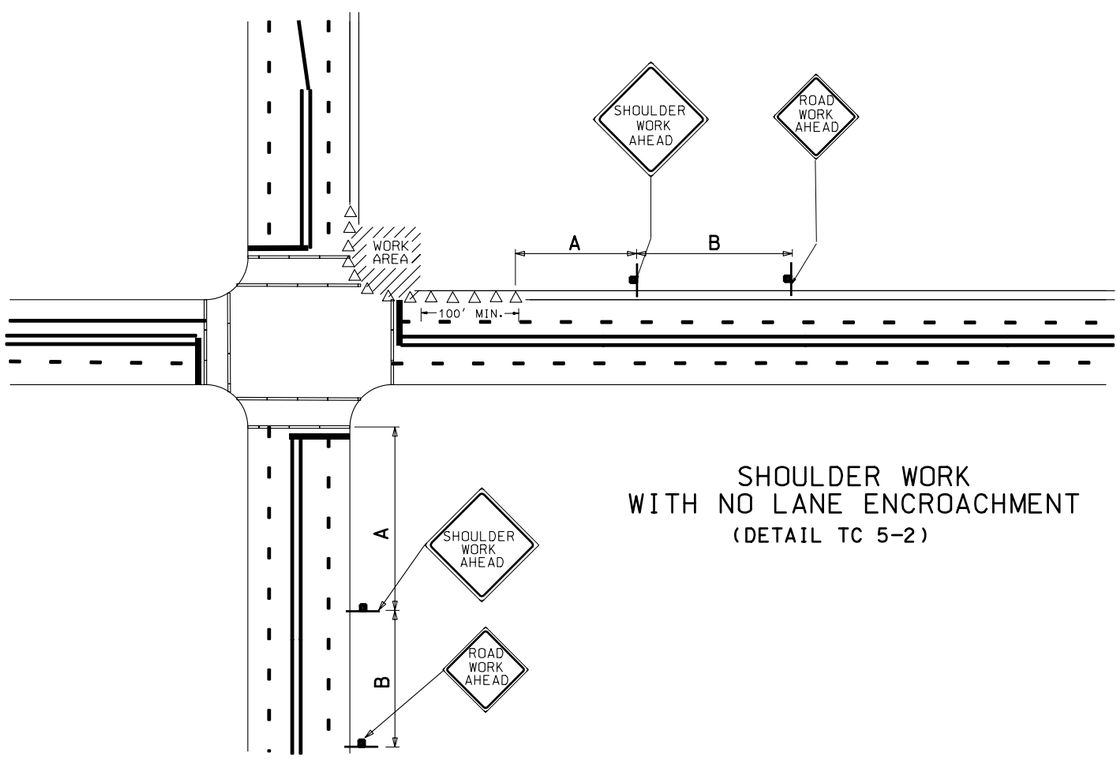

SHOULDER WORK
WITH NO LANE ENCROACHMENT
(DETAIL TC 5-2)

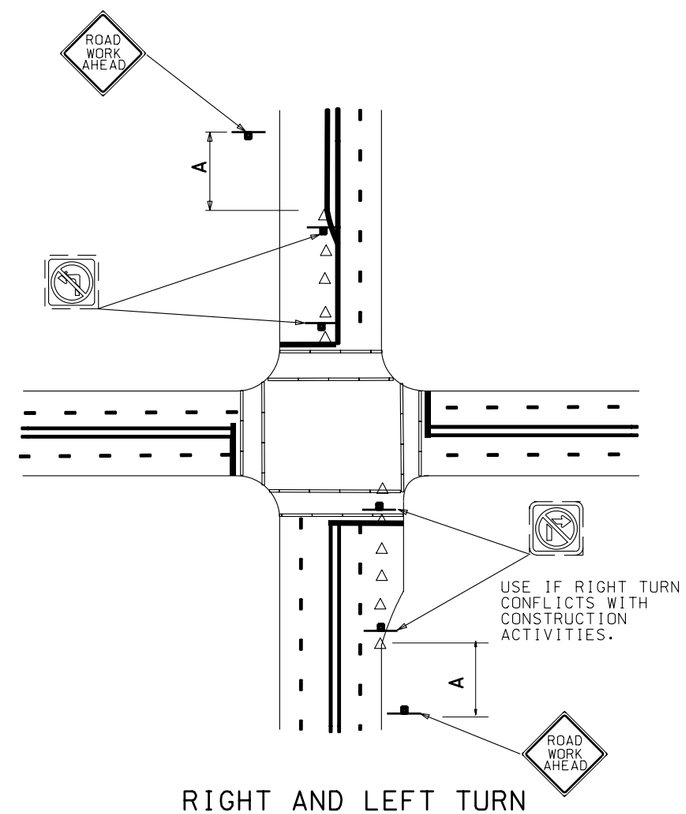

RIGHT AND LEFT TURN
LANES CLOSURE
(DETAIL TC 5-3)

NOTES:

1. FLAGGING IS OPTIONAL WITH LANE CLOSURE.
2. MAINTAIN PEDESTRIAN TRAFFIC AT EXISTING CROSSWALKS AND ON EXISTING SIDEWALKS. WHEN PEDESTRIAN TRAFFIC CANNOT BE MAINTAINED REROUTE ACCORDING TO STD DWG TC 6.
3. PROVIDE A MINIMUM 10' TRAFFIC LANE IN EACH DIRECTION. IF THIS CANNOT BE DONE USE A FLAGGING OPERATION AS PER STD DWG TC 14.
4. SEE STD DWG TC 2B FOR TAPER, BUFFER, AND SIGN SPACING CHART.

REVISIONS

NO.	DATE	APPR.	REMARKS

UTAH DEPARTMENT OF TRANSPORTATION
STANDARD DRAWINGS FOR ROAD AND BRIDGE CONSTRUCTION
SALT LAKE CITY, UTAH

RECOMMENDED FOR APPROVAL — JULY 03,2002 DATE
CHAIRMAN STANDARDS COMMITTEE APPROVED — JULY 03,2002 DATE
DEPUTY DIRECTOR

STANDARD DRAWING TITLE
TRAFFIC CONTROL
URBAN INTERSECTION
WITH ROADWAY UNDER
50 MPH

STD DWG
TC 5

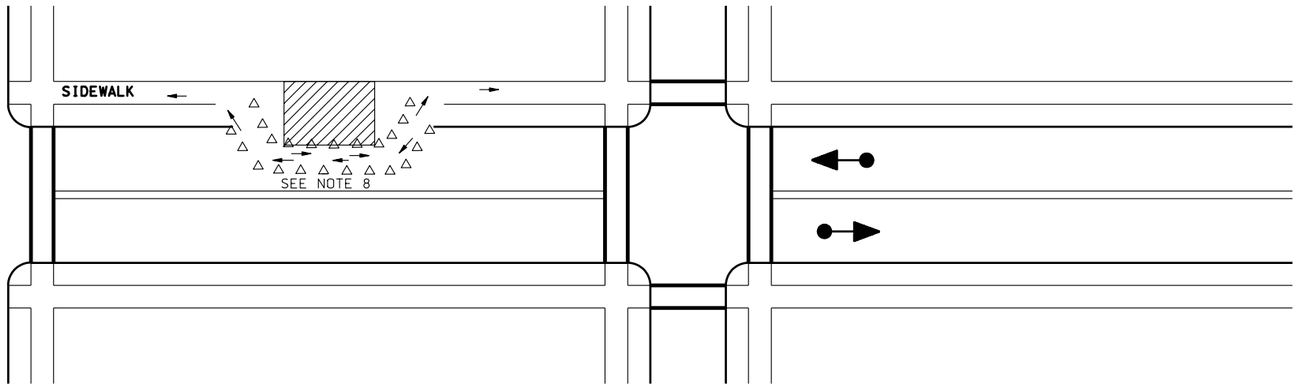

TEMPORARY WALKWAY
(DETAIL TC 6-1)
SEE NOTE 1

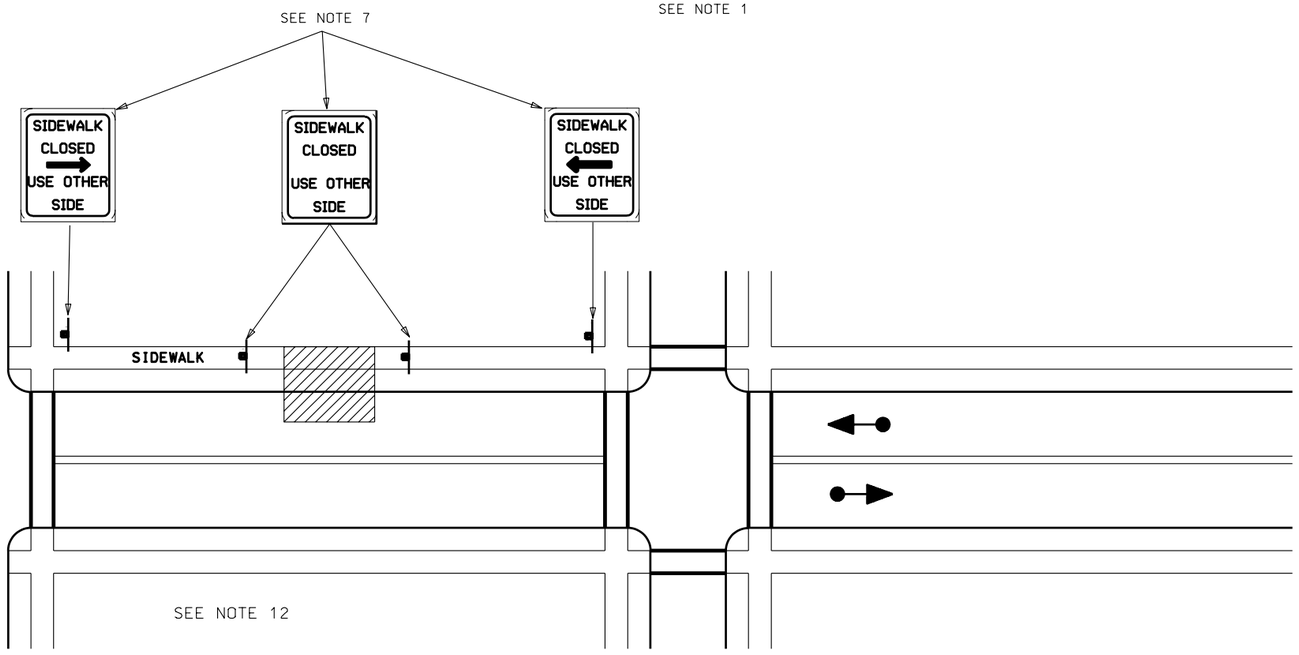

ALTERNATE ROUTE
(DETAIL TC 6-2)
SEE NOTE 1

NOTES:

1. ONLY THE TRAFFIC CONTROL DEVICES CONTROLLING PEDESTRIAN FLOWS ARE SHOWN. OTHER DEVICES ARE NEEDED TO CONTROL TRAFFIC ON THE STREET. USE LANE CLOSURE SIGNING OR ROAD NARROWS SIGNS, AS NEEDED.
2. PROVIDE A TEMPORARY WALKWAY AROUND CONSTRUCTION AREA IF WALKWAY IS CLOSED TO PEDESTRIANS. IF WALKWAY CANNOT BE PROVIDED DIRECT PEDESTRIANS TO ALTERNATE ROUTES. (SEE DETAIL TC 6-1)
3. CONSTRUCT WALKWAY A MINIMUM OF 48″ WIDE AND COVER WHEN POTENTIAL OF FALLING MATERIAL EXIST.
4. CONSTRUCT WALKWAY WITH A WOOD FLOOR OR PAVED SURFACE SO THAT IT IS TRAVERSABLE BY A WHEELCHAIR.
5. WHEN SIDEWALKS EXIST ON BOTH SIDES OF STREET COMPLETE WORK ON ONE SIDE AND REOPEN PRIOR TO STARTING WORK ON THE OTHER SIDE.
6. MOUNT SIGNS 6′ MINIMUM HEIGHT.
7. USE A SIGN 24″ X 36″ MINIMUM, SIGN LEGEND TO BE 4″ MINIMUM, SERIES "C" WITH AN ARROW 4″ X 12″.
8. USE CHANNELIZING DEVICES SPACED 10′ ON CENTER AND CONNECTED TO EACH OTHER WITH AN ORANGE, RED, OR YELLOW POLYVINYL RIBBON OR STREAMER 4″ OR GREATER IN WIDTH.
9. USE A 20′ CORNER RADIUS TO DEVELOP A TEMPORARY WALKWAY AROUND A CORNER.
10. DIRECT PEDESTRIANS TO AN INTERSECTION OR MARKED CROSSWALK AS AN ALTERNATE ROUTE WHEN POSSIBLE.
11. CONSULT REGION TRAFFIC ENGINEER WHEN SCHOOL ROUTING PLANS ARE AFFECTED.
12. DO NOT DIRECT PEDESTRIANS TO OPPOSITE SIDE IF SIDEWALK DOES NOT EXIST.

REVISIONS

NO.	DATE	APPR.	REMARKS

UTAH DEPARTMENT OF TRANSPORTATION
STANDARD DRAWINGS FOR ROAD AND BRIDGE CONSTRUCTION
SALT LAKE CITY, UTAH

RECOMMENDED FOR APPROVAL — JULY 03,2002 DATE
CHAIRMAN STANDARDS COMMITTEE APPROVED — JULY 03,2002 DATE
DEPUTY DIRECTOR

TRAFFIC CONTROL
PEDESTRIAN ROUTING

STANDARD DRAWING TITLE

STD DWG
TC 6

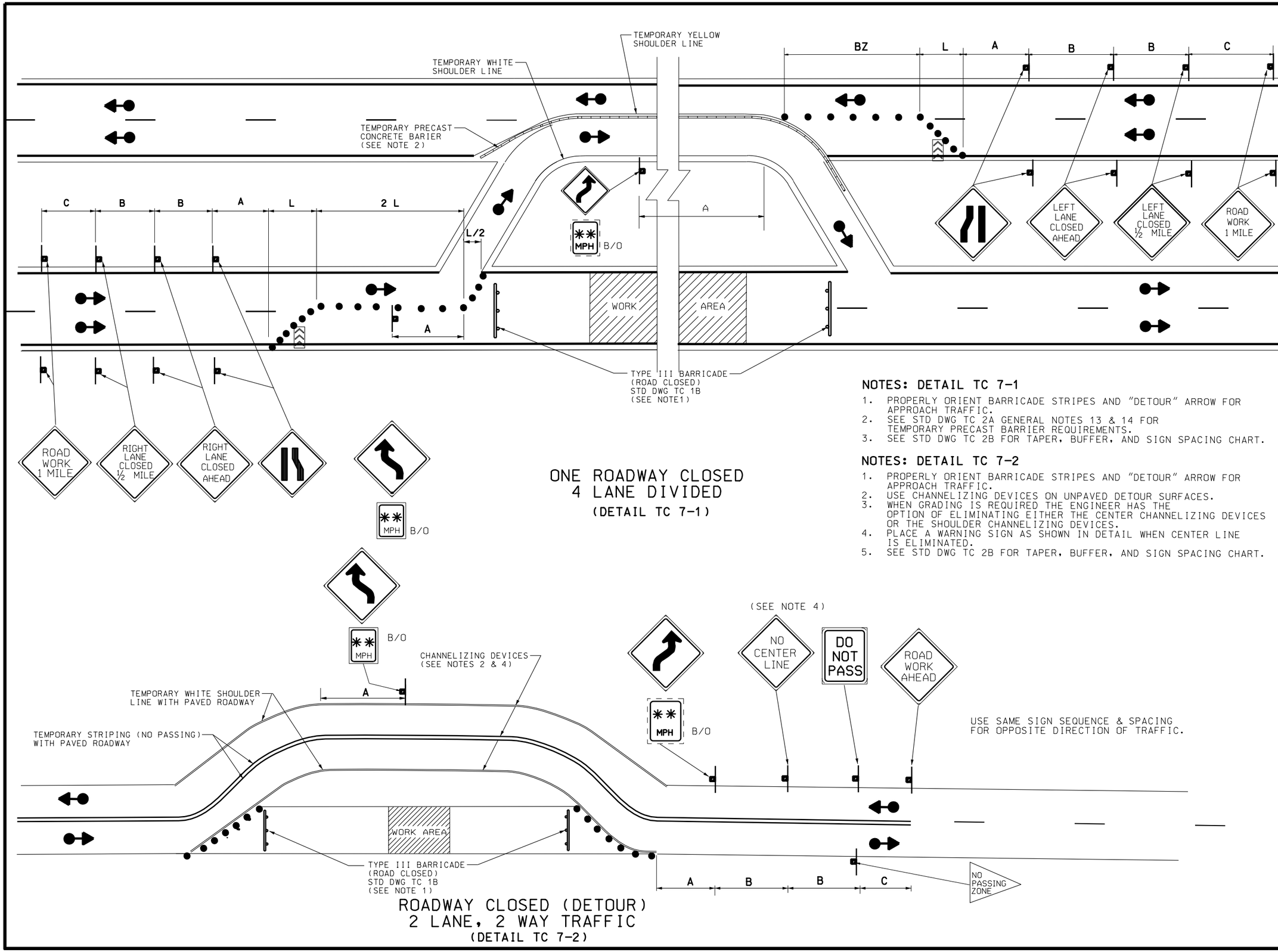

ONE ROADWAY CLOSED
4 LANE DIVIDED
(DETAIL TC 7-1)

ROADWAY CLOSED (DETOUR)
2 LANE, 2 WAY TRAFFIC
(DETAIL TC 7-2)

NOTES: DETAIL TC 7-1

1. PROPERLY ORIENT BARRICADE STRIPES AND "DETOUR" ARROW FOR APPROACH TRAFFIC.
2. SEE STD DWG TC 2A GENERAL NOTES 13 & 14 FOR TEMPORARY PRECAST BARRIER REQUIREMENTS.
3. SEE STD DWG TC 2B FOR TAPER, BUFFER, AND SIGN SPACING CHART.

NOTES: DETAIL TC 7-2

1. PROPERLY ORIENT BARRICADE STRIPES AND "DETOUR" ARROW FOR APPROACH TRAFFIC.
2. USE CHANNELIZING DEVICES ON UNPAVED DETOUR SURFACES.
3. WHEN GRADING IS REQUIRED THE ENGINEER HAS THE OPTION OF ELIMINATING EITHER THE CENTER CHANNELIZING DEVICES OR THE SHOULDER CHANNELIZING DEVICES.
4. PLACE A WARNING SIGN AS SHOWN IN DETAIL WHEN CENTER LINE IS ELIMINATED.
5. SEE STD DWG TC 2B FOR TAPER, BUFFER, AND SIGN SPACING CHART.

NO.	DATE	APPR.	REMARKS

REVISIONS

UTAH DEPARTMENT OF TRANSPORTATION
STANDARD DRAWINGS FOR ROAD AND BRIDGE CONSTRUCTION
SALT LAKE CITY, UTAH

RECOMMENDED FOR APPROVAL — JULY 03,2002 DATE

CHAIRMAN STANDARDS COMMITTEE APPROVED — JULY 03,2002 DATE

DEPUTY DIRECTOR

TRAFFIC CONTROL
ROAD CLOSED, DETOUR

STANDARD DRAWING TITLE

STD DWG
TC 7

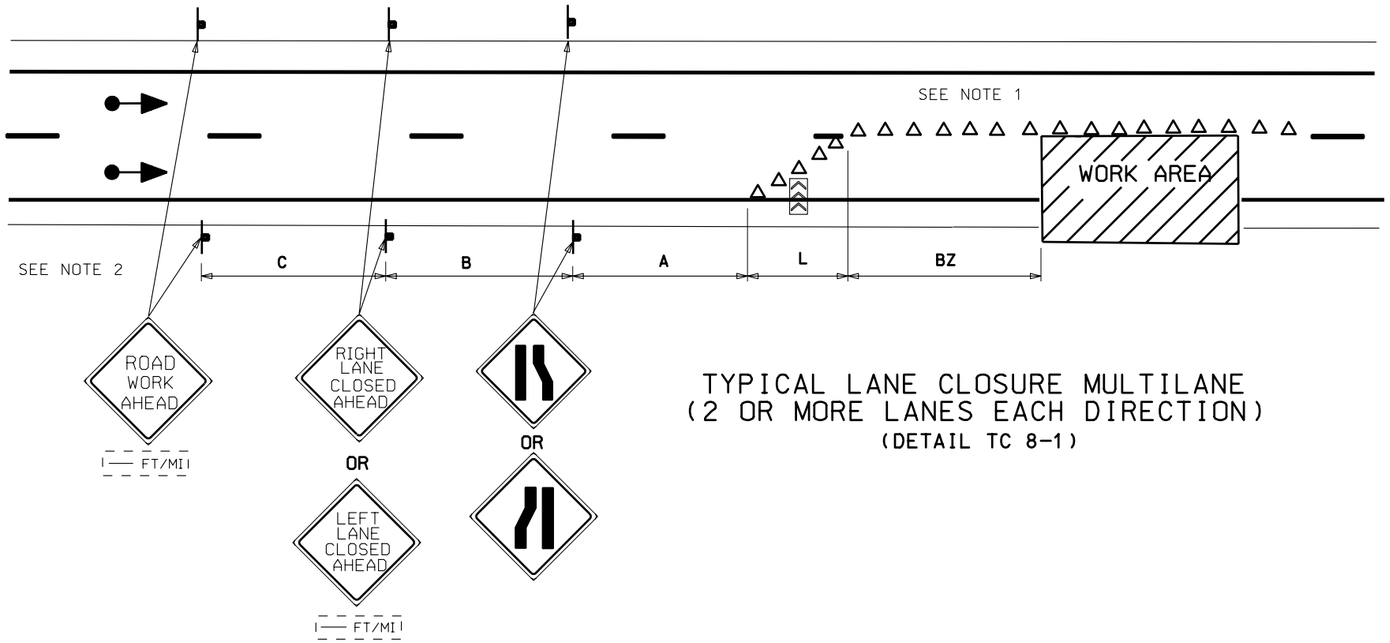

TYPICAL LANE CLOSURE MULTILANE
(2 OR MORE LANES EACH DIRECTION)
(DETAIL TC 8-1)

NOTES: DETAIL TC 8-1

1. USE PLASTIC DRUMS FOR ALL CHANNELIZING DEVICES FOR SPEEDS 50 MPH AND GREATER.
2. PLACE SIGNS IN MEDIAN/LEFT SHOULDER WHEN CONDITIONS PERMIT.
3. SEE STD DWG TC 2B FOR TAPER, BUFFER ZONE, AND SIGN SPACING CHART.

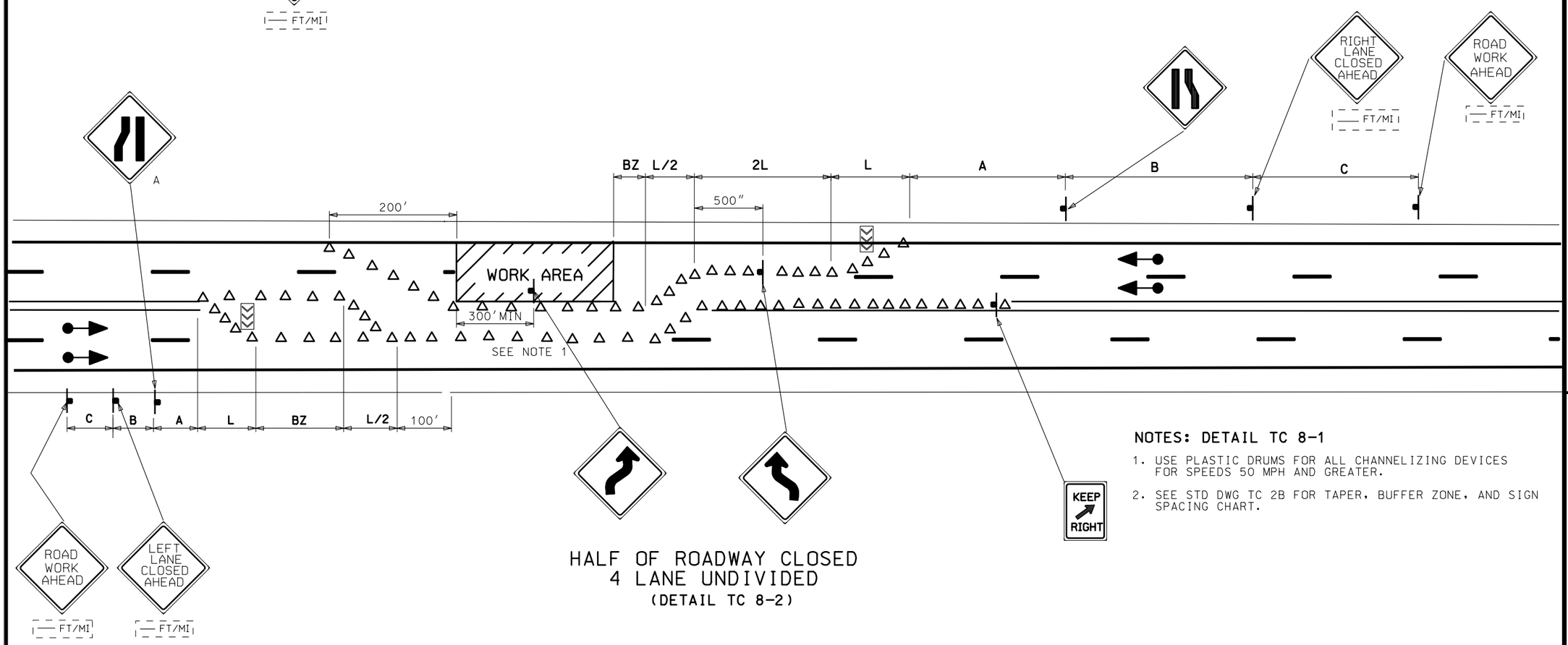

HALF OF ROADWAY CLOSED
4 LANE UNDIVIDED
(DETAIL TC 8-2)

NOTES: DETAIL TC 8-1

1. USE PLASTIC DRUMS FOR ALL CHANNELIZING DEVICES FOR SPEEDS 50 MPH AND GREATER.
2. SEE STD DWG TC 2B FOR TAPER, BUFFER ZONE, AND SIGN SPACING CHART.

REVISIONS			
NO.	DATE	APPR.	REMARKS

UTAH DEPARTMENT OF TRANSPORTATION
STANDARD DRAWINGS FOR ROAD AND BRIDGE CONSTRUCTION
SALT LAKE CITY, UTAH

RECOMMENDED FOR APPROVAL — JULY 03,2002 DATE

CHAIRMAN STANDARDS COMMITTEE APPROVED — JULY 03,2002 DATE

DEPUTY DIRECTOR

STANDARD DRAWING TITLE
TRAFFIC CONTROL
LANE CLOSURE

STD DWG
TC 8

NOTE:

1. SEE STD DWG TC 2B FOR TAPER, BUFFER, AND SIGN SPACING CHART.

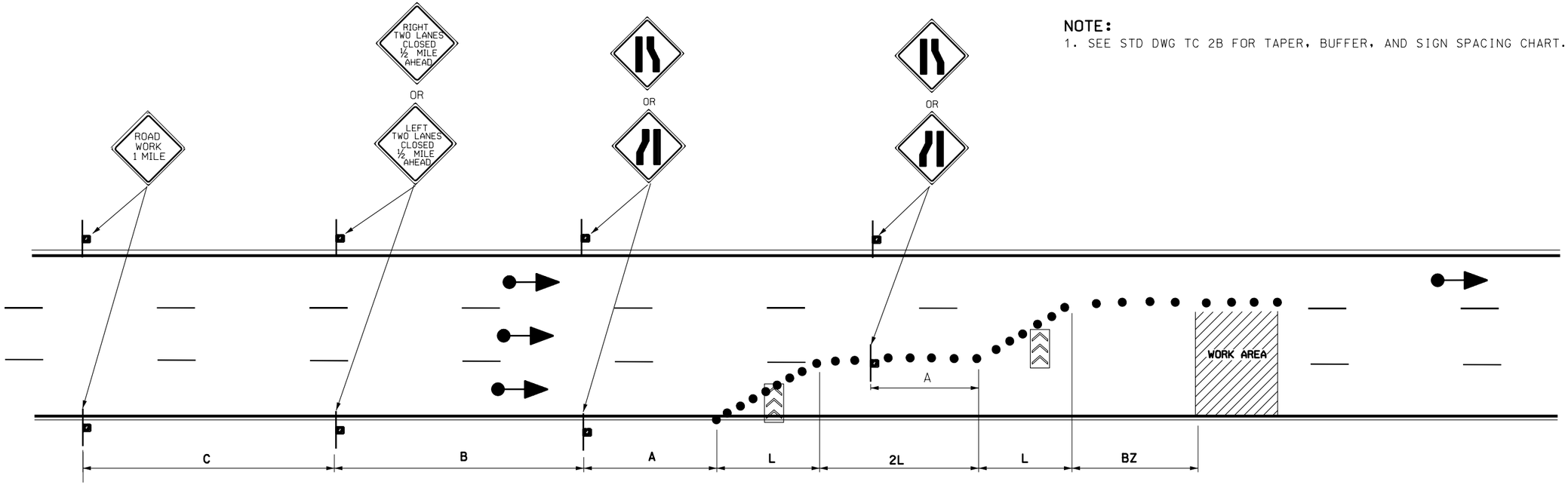

TWO LANES CLOSURE

(DETAIL TC 9-1)

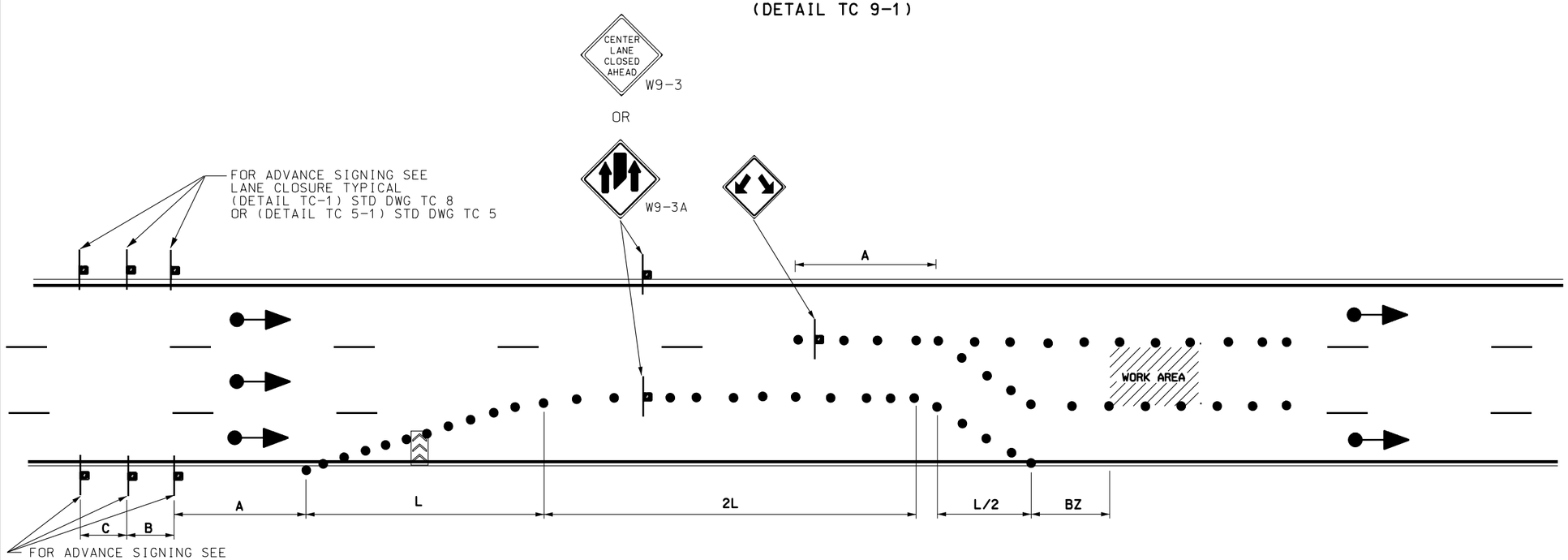

CENTER LANE CLOSURE

(DETAIL TC 9-2)

REVISIONS

NO.	DATE	APPR.	REMARKS

UTAH DEPARTMENT OF TRANSPORTATION

STANDARD DRAWINGS FOR ROAD AND BRIDGE CONSTRUCTION

SALT LAKE CITY, UTAH

RECOMMENDED FOR APPROVAL — JULY 03,2002 DATE

CHAIRMAN STANDARDS COMMITTEE APPROVED — JULY 03,2002 DATE

DEPUTY DIRECTOR

TRAFFIC CONTROL MULTILANE CLOSURE

STANDARD DRAWING TITLE

STD DWG

TC 9

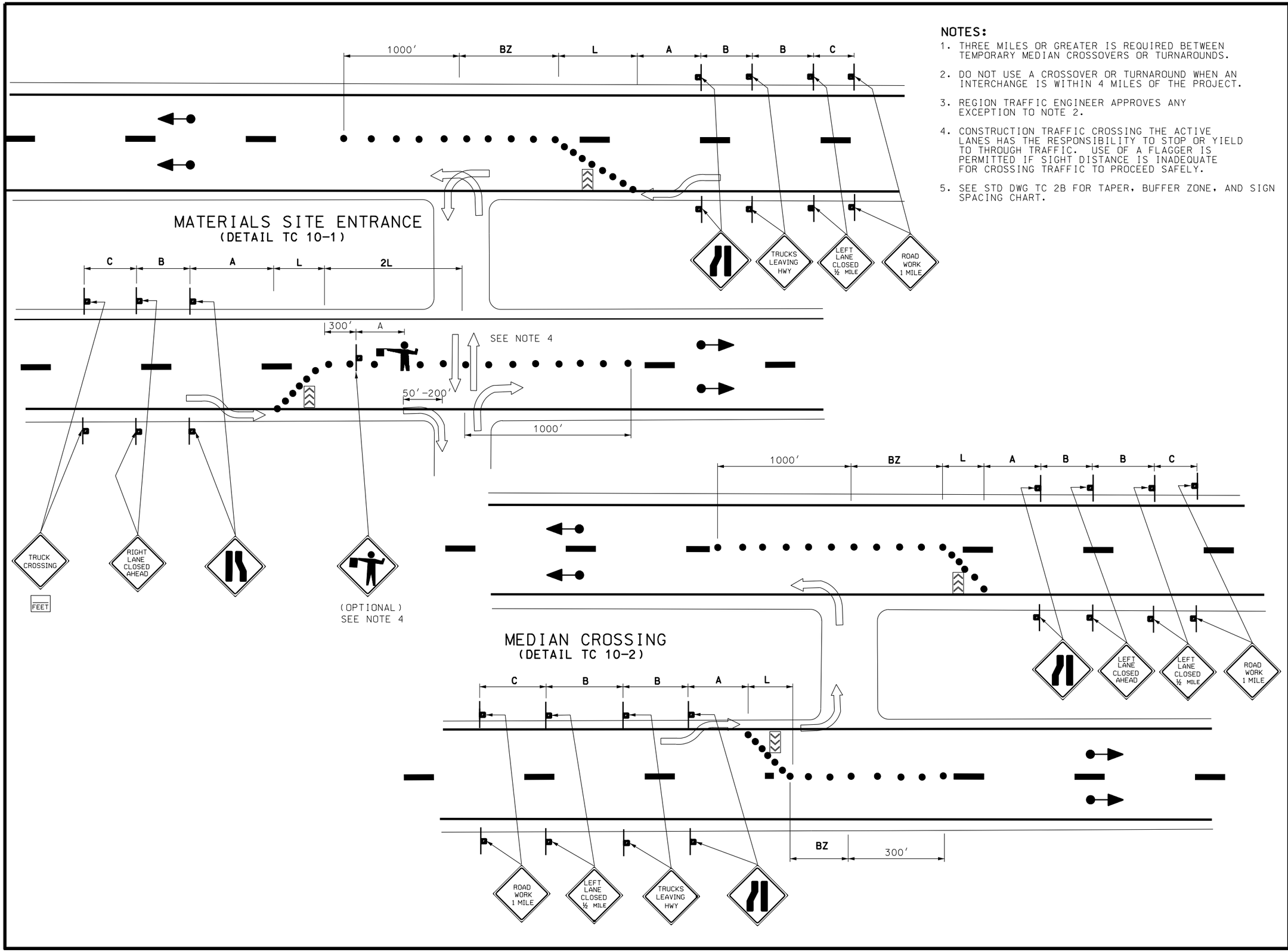

NOTES:

1. THREE MILES OR GREATER IS REQUIRED BETWEEN TEMPORARY MEDIAN CROSSOVERS OR TURNAROUNDS.
2. DO NOT USE A CROSSOVER OR TURNAROUND WHEN AN INTERCHANGE IS WITHIN 4 MILES OF THE PROJECT.
3. REGION TRAFFIC ENGINEER APPROVES ANY EXCEPTION TO NOTE 2.
4. CONSTRUCTION TRAFFIC CROSSING THE ACTIVE LANES HAS THE RESPONSIBILITY TO STOP OR YIELD TO THROUGH TRAFFIC. USE OF A FLAGGER IS PERMITTED IF SIGHT DISTANCE IS INADEQUATE FOR CROSSING TRAFFIC TO PROCEED SAFELY.
5. SEE STD DWG TC 2B FOR TAPER, BUFFER ZONE, AND SIGN SPACING CHART.

REVISIONS			
NO.	DATE	APPR.	REMARKS

UTAH DEPARTMENT OF TRANSPORTATION
STANDARD DRAWINGS FOR ROAD AND BRIDGE CONSTRUCTION
SALT LAKE CITY, UTAH

RECOMMENDED FOR APPROVAL — JULY 03,2002 DATE

CHAIRMAN STANDARDS COMMITTEE APPROVED — JULY 03,2002 DATE

DEPUTY DIRECTOR

STANDARD DRAWING TITLE

TRAFFIC CONTROL EXPRESSWAY AND FREEWAY CROSSOVER/ TURN AROUND

STD DWG
TC 10

TRAFFIC CONTROL FOR EXIT RAMP GORE

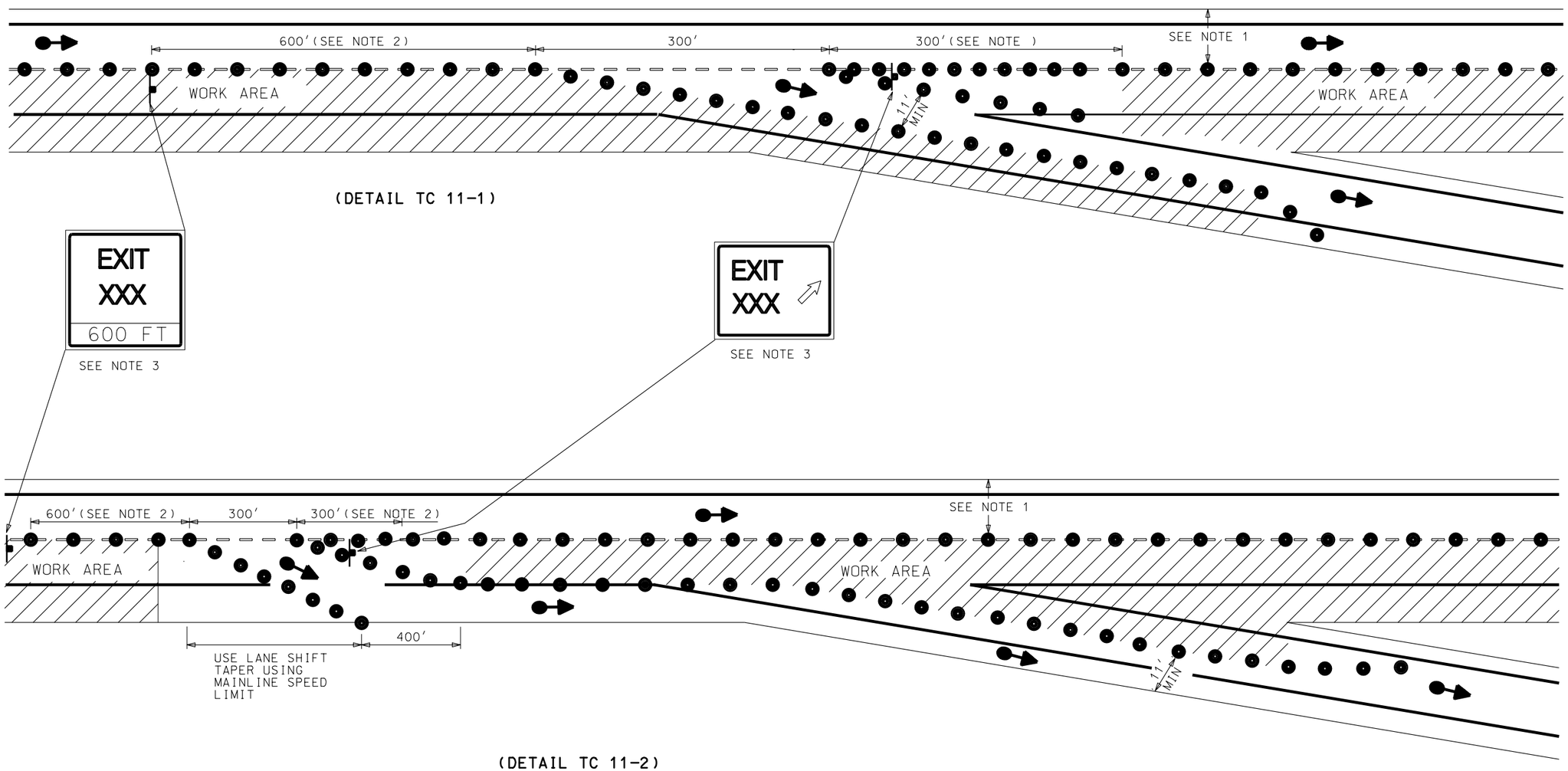

NOTES:

1. MAINTAIN 12' TRAVEL LANE AND 2' SHOULDER WIDTHS.
2. USE CHANNELIZING DEVICES SPADED AT 50'.
3. SEE STD DWG TC 1B.

REVISIONS

NO.	DATE	APPR.	REMARKS

UTAH DEPARTMENT OF TRANSPORTATION
STANDARD DRAWINGS FOR ROAD AND BRIDGE CONSTRUCTION
SALT LAKE CITY, UTAH

RECOMMENDED FOR APPROVAL — JULY 03,2002 DATE

CHAIRMAN STANDARDS COMMITTEE APPROVED — JULY 03,2002 DATE

DEPUTY DIRECTOR

STANDARD DRAWING TITLE: TRAFFIC CONTROL EXIT RAMP GORE

STD DWG
TC 11

TRAFFIC CONTROL FOR ENTRANCE RAMP GORE

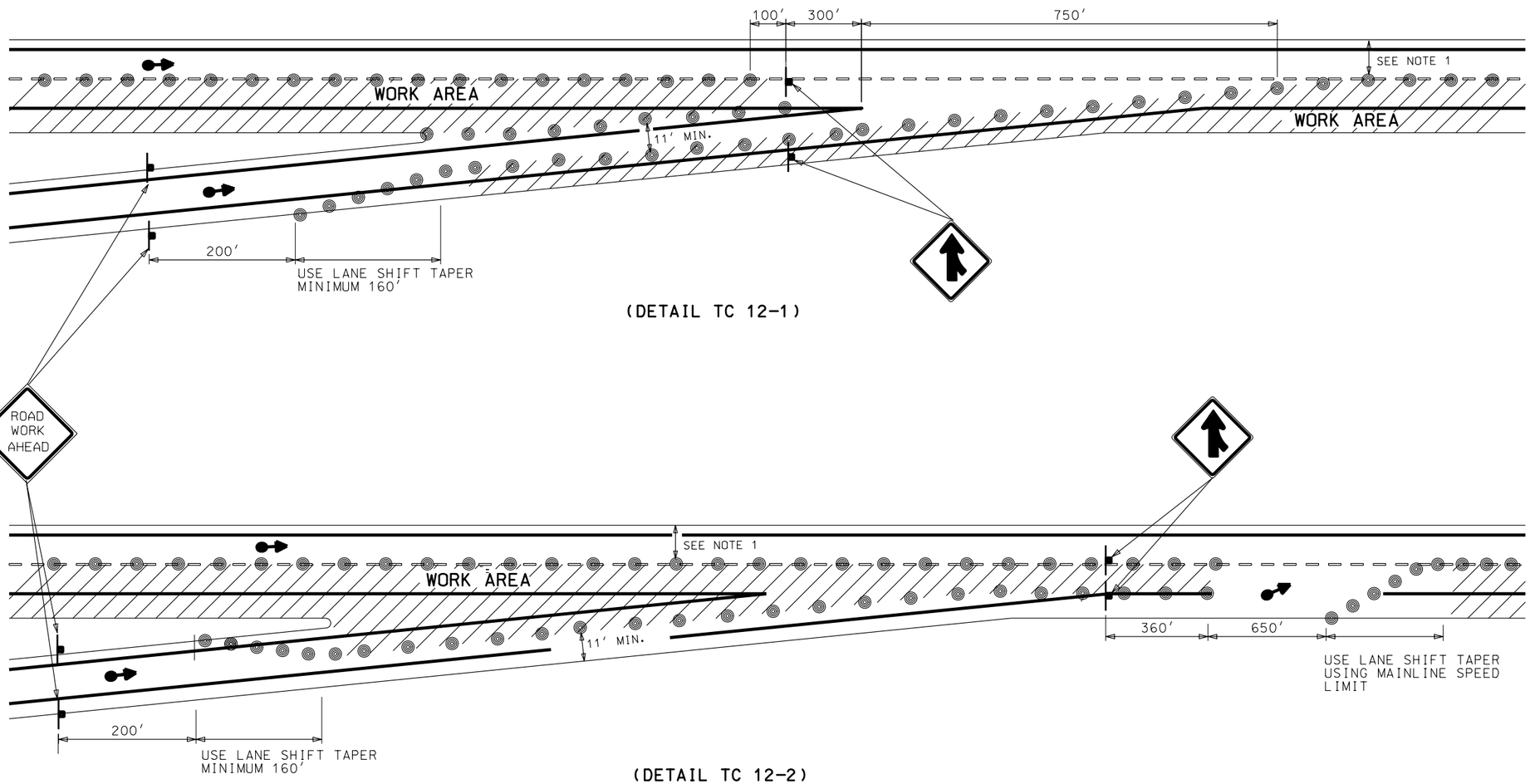

NOTE :

1. MAINTAIN 12' TRAVEL LANE AND 2'SHOULDER WIDTHS.

REVISIONS

NO.	DATE	APPR.	REMARKS

UTAH DEPARTMENT OF TRANSPORTATION
STANDARD DRAWINGS FOR ROAD AND BRIDGE CONSTRUCTION
SALT LAKE CITY, UTAH

RECOMMENDED FOR APPROVAL — JULY 03,2002 DATE

CHAIRMAN STANDARDS COMMITTEE APPROVED — JULY 03,2002 DATE

DEPUTY DIRECTOR

TRAFFIC CONTROL
ENTRANCE RAMP GORE

STANDARD DRAWING TITLE

STD DWG
TC 12

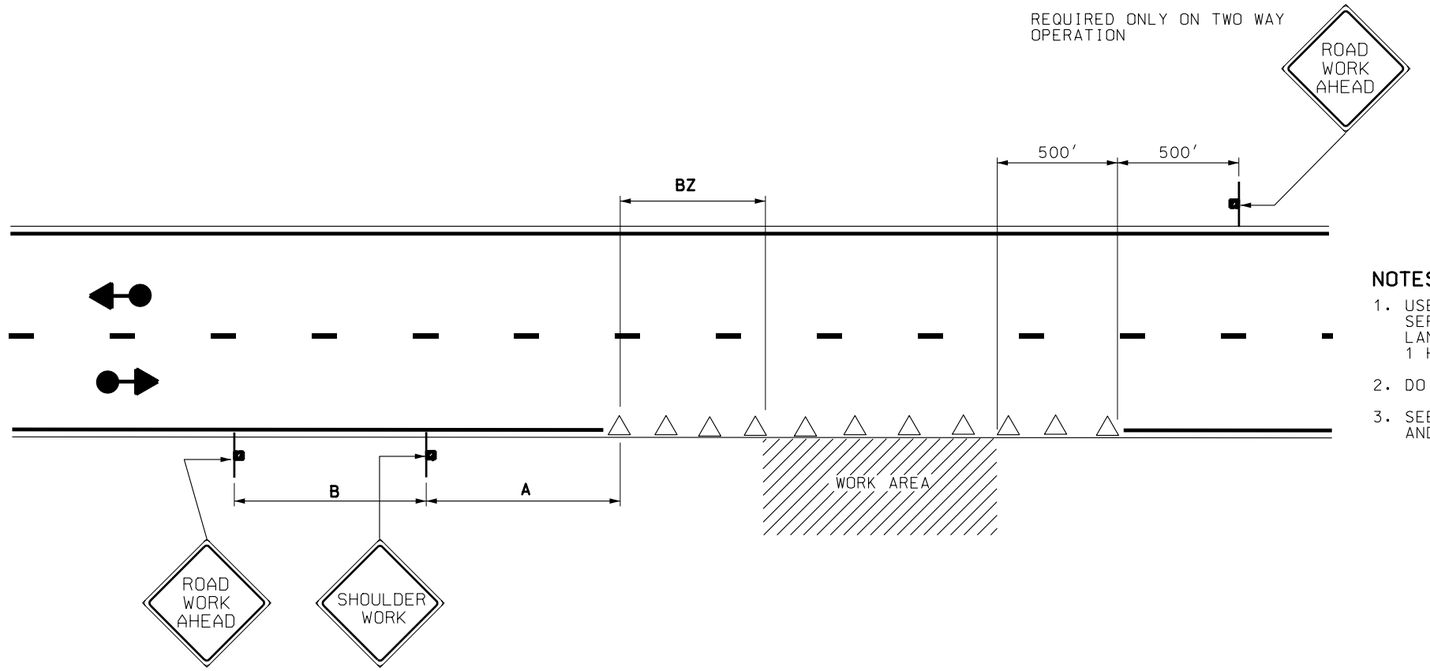

SHOULDER OPERATION
(DETAIL TC 13-1)

NOTES: DETAIL TC 13-1

1. USE CHANNELIZING DEVICES TO SEPARATE WORK ZONE FROM TRAVEL LANE WHEN WORK DURATION EXCEEDS 1 HOUR.
2. DO NOT ENCROACH INTO LANES.
3. SEE STD DWG TC 2B FOR TAPER, BUFFER, AND SIGN SPACING CHART.

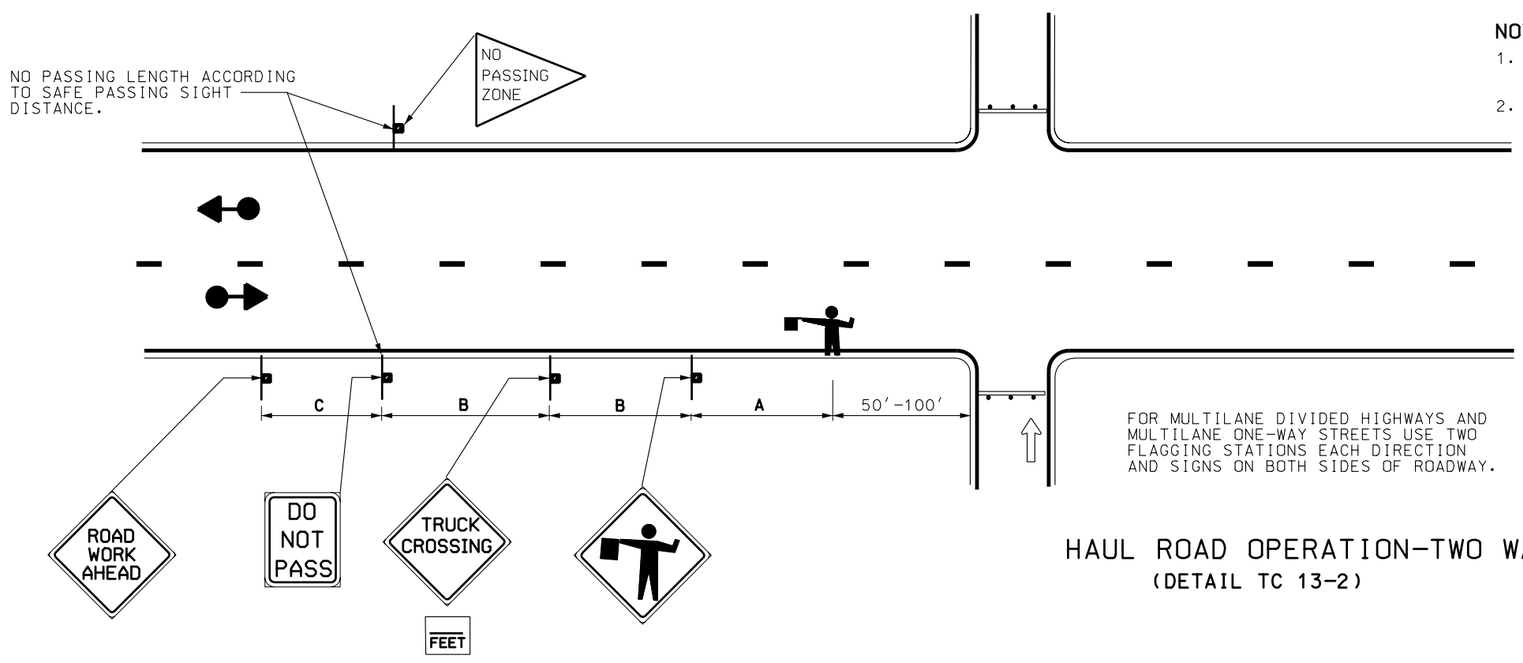

NOTES: DETAIL TC 13-2

1. INSTALL TYPE III BARRICADES WHEN HAUL ROAD IS NOT IN USE.
2. SEE STD DWG TC 2B FOR TAPER, BUFFER, AND SIGN SPACING CHART.

USE SAME SIGN SEQUENCE AND SPACING FOR OPPOSITE DIRECTION OF TRAFFIC.

FOR MULTILANE DIVIDED HIGHWAYS AND MULTILANE ONE-WAY STREETS USE TWO FLAGGING STATIONS EACH DIRECTION AND SIGNS ON BOTH SIDES OF ROADWAY.

HAUL ROAD OPERATION-TWO WAY
(DETAIL TC 13-2)

REVISIONS

NO.	DATE	APPR.	REMARKS

UTAH DEPARTMENT OF TRANSPORTATION
STANDARD DRAWINGS FOR ROAD AND BRIDGE CONSTRUCTION
SALT LAKE CITY, UTAH

RECOMMENDED FOR APPROVAL — JULY 03,2002 DATE

CHAIRMAN STANDARDS COMMITTEE APPROVED — JULY 03,2002 DATE

DEPUTY DIRECTOR

STANDARD DRAWING TITLE
TRAFFIC CONTROL
SHOULDER-HAUL ROAD

STD DWG
TC 13

NOTES:

1. USE A FLAGGER AT ALL INTERSECTING ROADWAYS. REFER TO STANDARD SPECIFICATION 01554, ARTICLE 3.5 A, FOR REQUIREMENT AT OPERATING TRAFFIC SIGNALS.
2. PROVIDE FLAGGING IF TURNING TRAFFIC CONFLICTS WITH ONE WAY TRAFFIC.
3. PROVIDE A DETOUR WHEN ROAD CLOSURE EXCEEDS 24 HOURS.
4. SEE STD DWG TC 2B FOR TAPER, BUFFER ZONE, AND SIGN SPACING CHART.

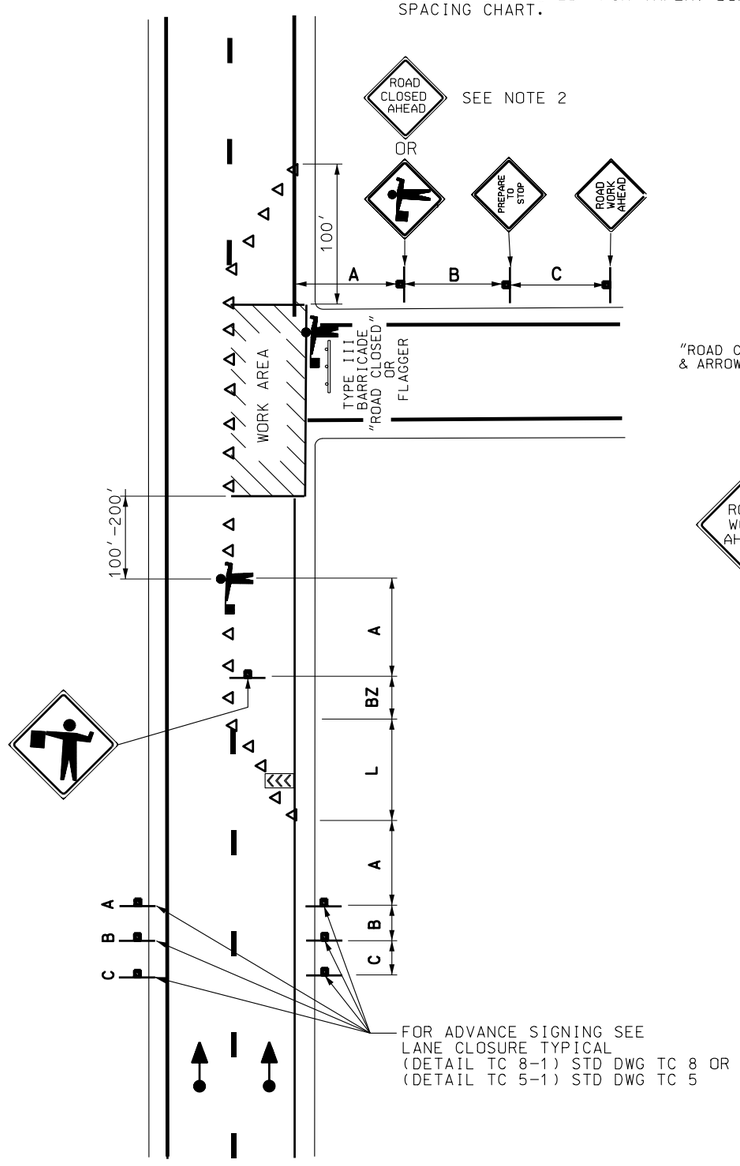

FLAGGING OPERATION – ONE WAY WITH POTENTIAL ENCROACHMENT BY WORK VEHICLE
(DETAIL TC 14-1)

USE SAME SIGN SEQUENCE, SPACING, & FLAGGER FOR OPPOSITE DIRECTION OF TRAFFIC.

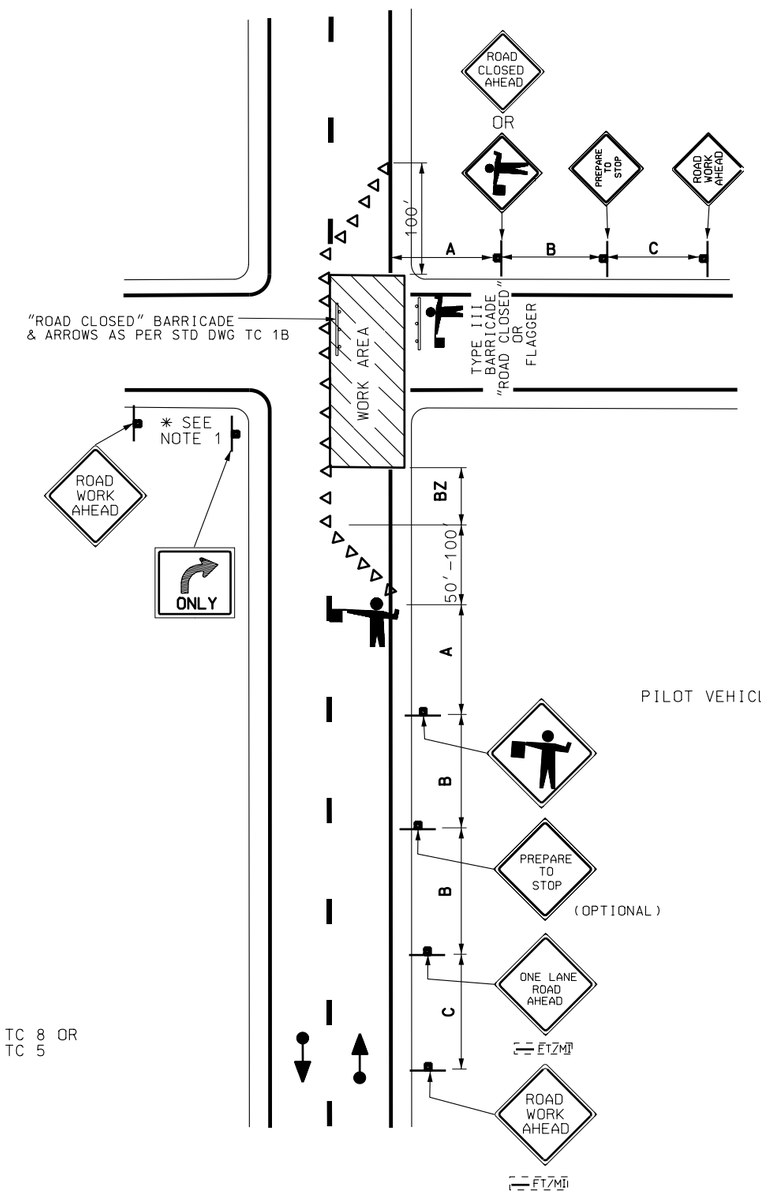

FLAGGING OPERATION – TWO WAY WITH ONE LANE CLOSED
(DETAIL TC 14-2)

USE SAME SIGN SEQUENCE, SPACING, & FLAGGER FOR OPPOSITE DIRECTION OF TRAFFIC.

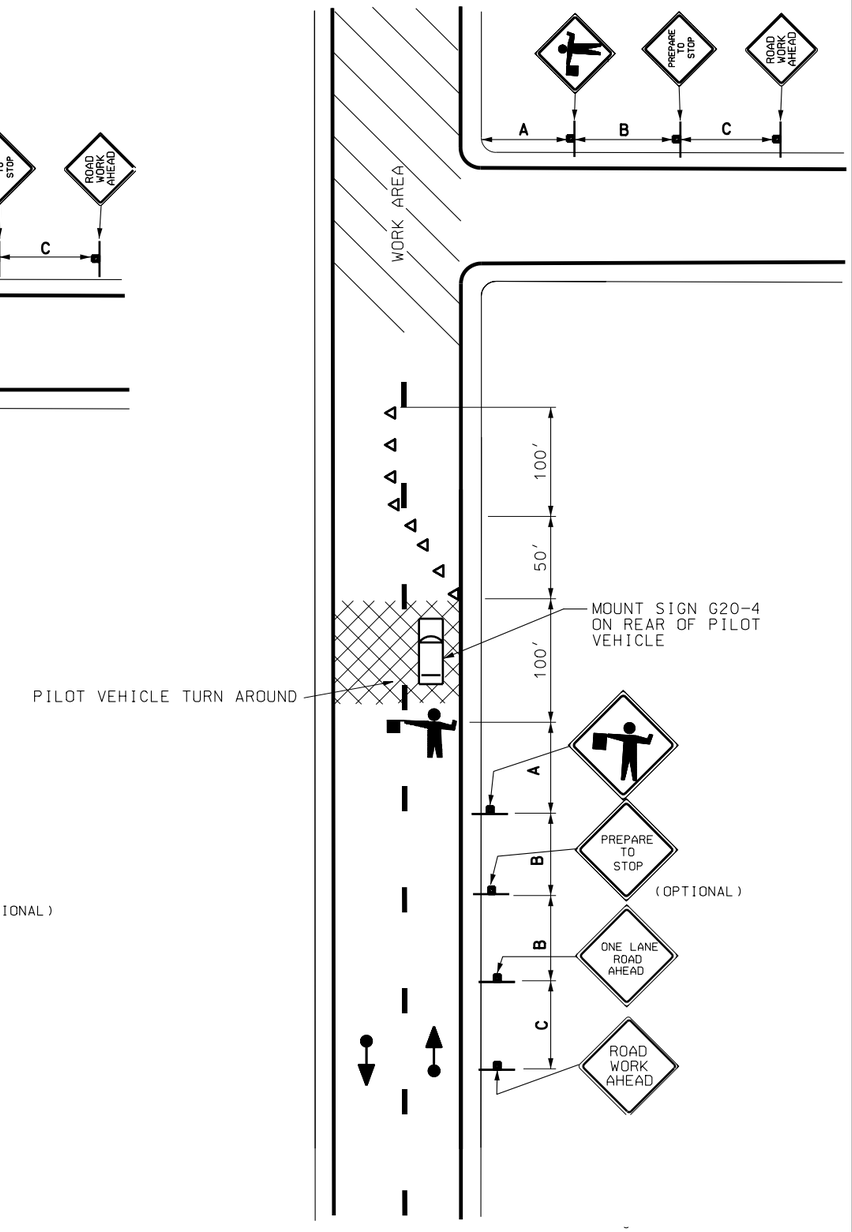

FLAGGING OPERATIONS WITH USE OF PILOT VEHICLE
(DETAIL TC 14-3)

REVISIONS

NO.	DATE	APPR.	REMARKS

UTAH DEPARTMENT OF TRANSPORTATION
STANDARD DRAWINGS FOR ROAD AND BRIDGE CONSTRUCTION
SALT LAKE CITY, UTAH

RECOMMENDED FOR APPROVAL — JULY 03,2002 DATE

CHAIRMAN STANDARDS COMMITTEE APPROVED — JULY 03,2002 DATE

DEPUTY DIRECTOR

STANDARD DRAWING TITLE
TRAFFIC CONTROL FLAGGING OPERATION

STD DWG
TC 14

PROJECT SIGNING
2 LANE-2 WAY

SAME SEQUENCE AND SPACING REQUIRED FOR OPPOSITE DIRECTION OF TRAFFIC.

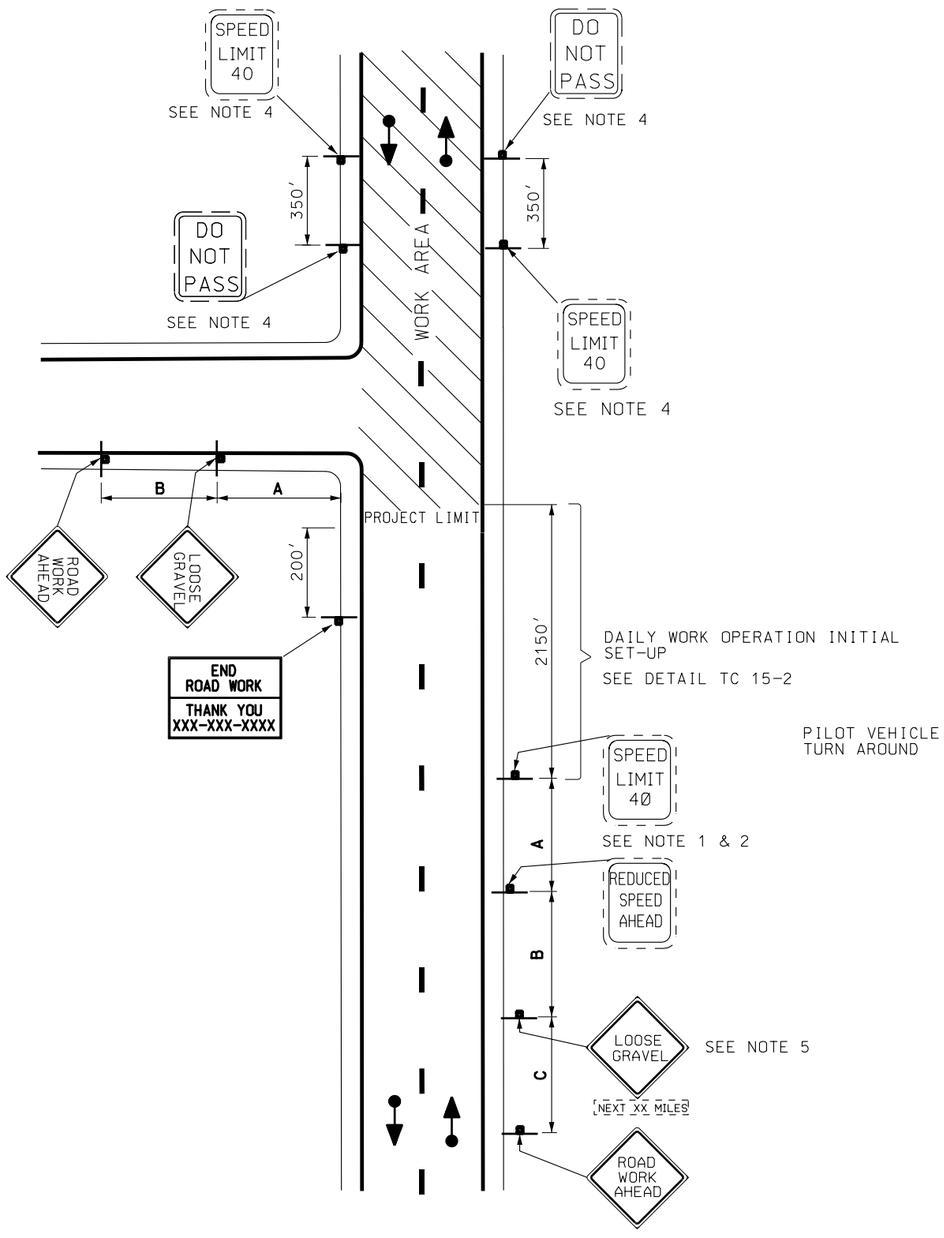

(DETAIL TC 15-1)

DAILY WORK OPERATION
2 LANE-2 WAY

SAME SIGN SEQUENCE, SPACING AND FLAGGER REQUIRED FOR OPPOSITE DIRECTION OF TRAFFIC.

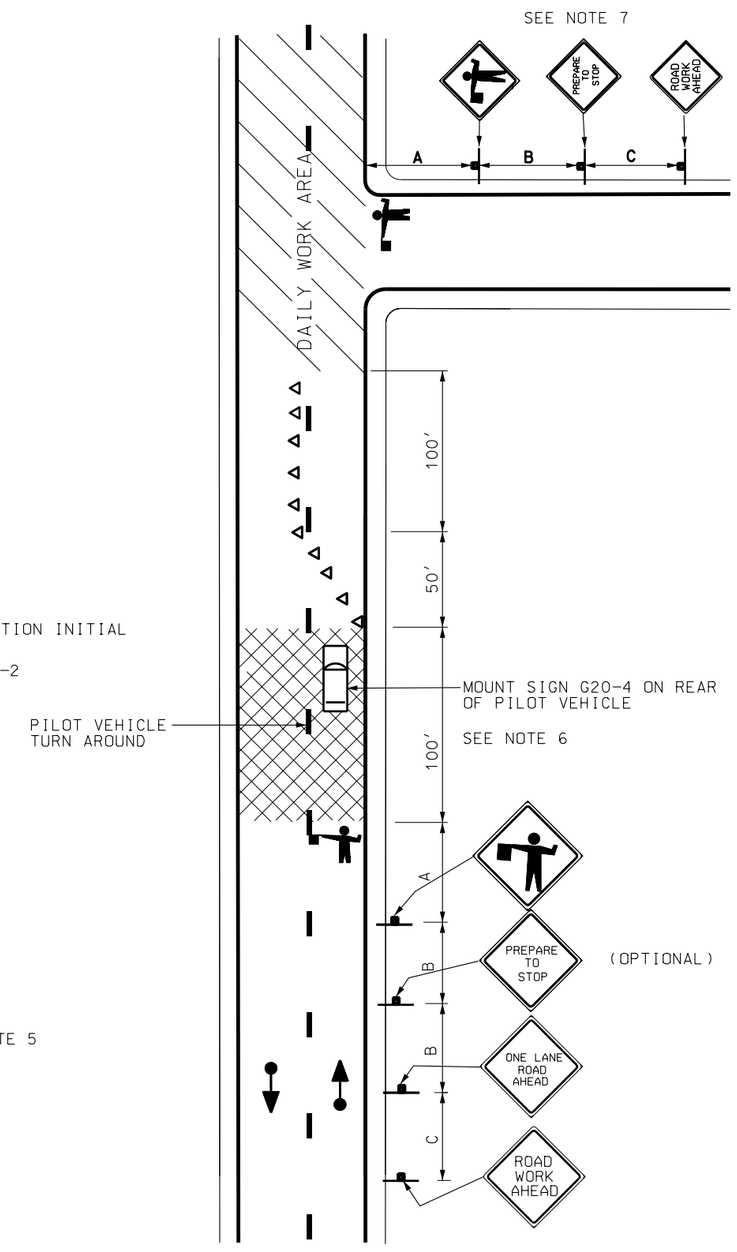

FLAGGING /PILOT VEHICLE OPERATION
(DETAIL TC 15-2)

NOTES:

1. ESTABLISH A REDUCED SPEED LIMIT OF 40 MPH FOR SEAL COAT AND COVER MATERIAL OPERATIONS WHEN SPEEDS ARE GREATER THAN 40 MPH.
2. "REDUCED SPEED AHEAD" AND "SPEED LIMIT" SIGNING NOT REQUIRED WHEN EXISTING SPEED LIMITS ARE 40 MPH OR LESS.
3. MOVE DAILY WORK OPERATION SIGNING, DETAIL TC 15-2, AS WORK PROGRESSES.
4. PLACE "DO NOT PASS" AND "SPEED LIMIT" SIGNS AT 1 MILE INTERVALS THROUGH THE PROJECT AND AT MAJOR INTERSECTIONS.
5. PLACE "LOOSE GRAVEL" SIGN WITH APPROPRIATE DISTANCE MESSAGE ½ WAY THROUGH THE PROJECT IF PROJECT LENGTH IS BETWEEN 5 MILES AND 10 MILES. REPEAT EVERY 4 MILES ON LONGER PROJECTS.
6. PILOT VEHICLE NOT TO EXCEED SPEED OF 25 MPH.
7. USE A FLAGGER AT ALL INTERSECTING ROADWAYS DURING DAILY WORK OPERATIONS. REFER TO STANDARD SPECIFICATION 01554 ARTICLE 3.5A FOR REQUIREMENTS AT OPERATING TRAFFIC SIGNALS.
8. CONTINUE FLAGGING AND PILOT VEHICLE OPERATIONS UNTIL THE ENGINEER OR THEIR REPRESENTATIVE ALLOWS FREE FLOW TRAFFIC TO PROCEED.
9. SEE STD DWG TC 2B FOR TAPER, BUFFER, AND SIGN SPACING CHART.

REVISIONS

NO.	DATE	APPR.	REMARKS

UTAH DEPARTMENT OF TRANSPORTATION
STANDARD DRAWINGS FOR ROAD AND BRIDGE CONSTRUCTION
SALT LAKE CITY, UTAH

RECOMMENDED FOR APPROVAL — JULY 03,2002 DATE

CHAIRMAN STANDARDS COMMITTEE APPROVED — JULY 03,2002 DATE

DEPUTY DIRECTOR

TRAFFIC CONTROL
2 LANE/ 2 WAY
SEAL COAT WITH
COVER MATERIAL

STANDARD DRAWING TITLE

STD DWG
TC 15

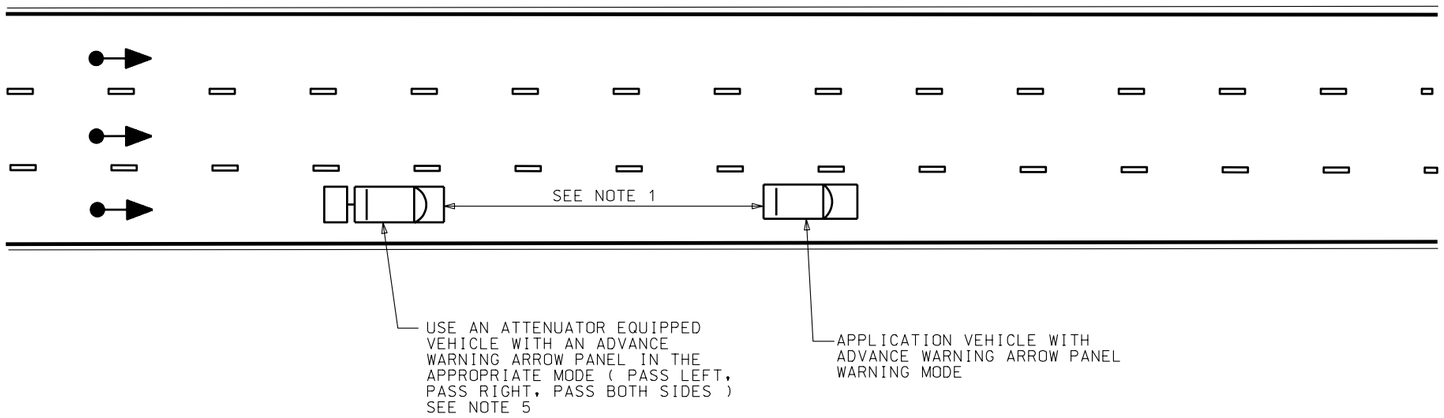

MULTILANE
LANE LINES & SHOULDER
(DETAIL TC 16-1)

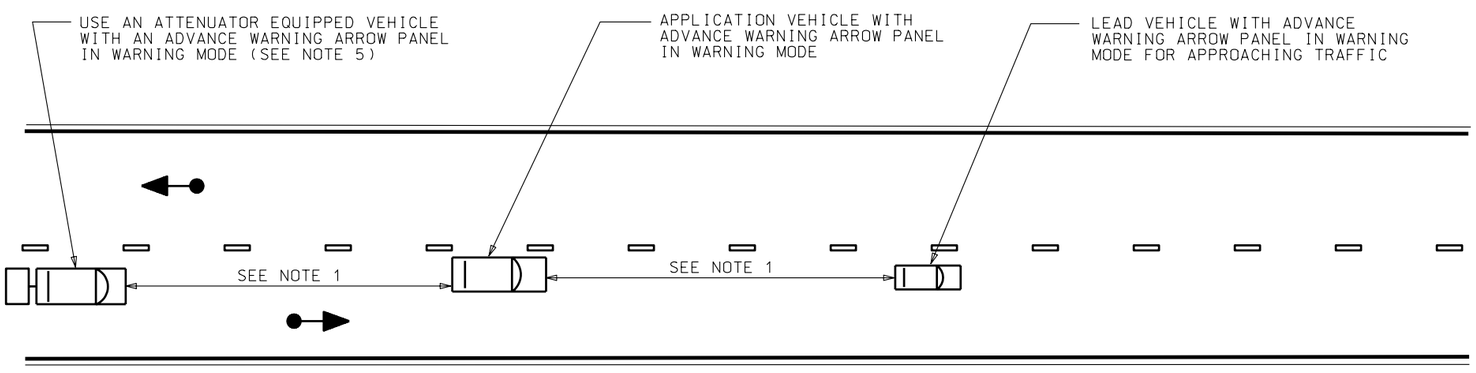

TWO LANE-TWO WAY
CENTER & SHOULDER
(DETAIL TC 16-2)

NOTES:

1. DO NOT EXCEED 300' SPACING BETWEEN THE APPLICATING TRUCK AND THE FOLLOW OR LEAD VEHICLE.
2. NO STATIC SIGNS ARE REQUIRED WITH THESE OPERATIONS.
3. ALL EQUIPMENT TO HAVE ROTARY STROBE LIGHTS AND EMERGENCY FLASHERS IN OPERATION.
4. USE TYPE B ADVANCED WARNING ARROW PANEL. SEE STD DWG TC 1A.
5. USE NCHRP-350 APPROVED TRUCK MOUNTED ATTENUATOR (TMA) MEETING THE REQUIREMENTS FOR THE POSTED SPEED LIMIT.

   TL-2 RATED SYSTEM FOR SPEEDS 45 ≤ MPH,
   TL-3 RATED SYSTEM FOR SPEEDS 50 ≥ MPH.

REVISIONS

NO.	DATE	APPR.	REMARKS

UTAH DEPARTMENT OF TRANSPORTATION
STANDARD DRAWINGS FOR ROAD AND BRIDGE CONSTRUCTION
SALT LAKE CITY, UTAH

RECOMMENDED FOR APPROVAL — JULY 03,2002 DATE

CHAIRMAN STANDARDS COMMITTEE APPROVED — JULY 03,2002 DATE

DEPUTY DIRECTOR

STANDARD DRAWING TITLE
TRAFFIC CONTROL
PAVEMENT MARKING

STD DWG
TC 16

2002 STANDARD DRAWINGS

END OF DRAWING BOOK