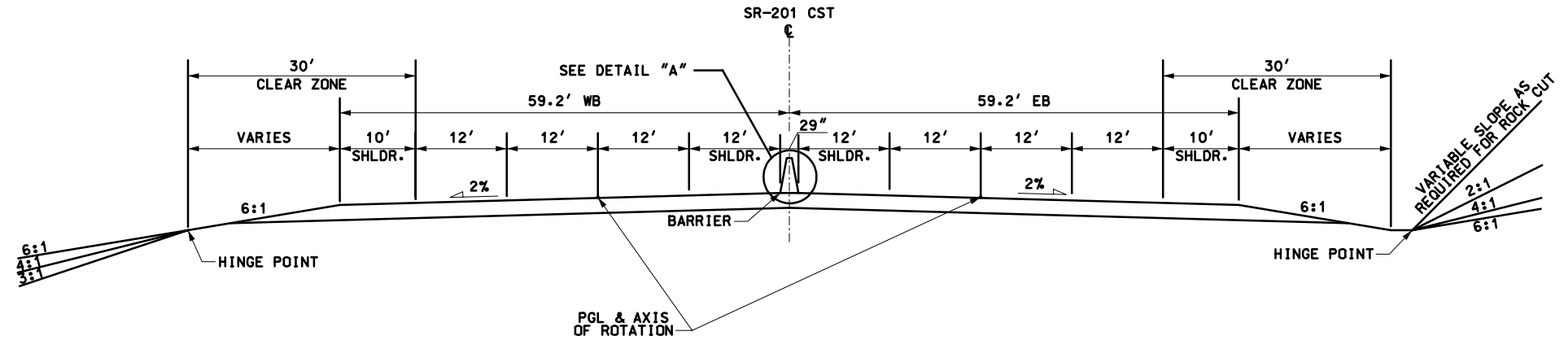

SR 201 TYPICAL TANGENT SECTION

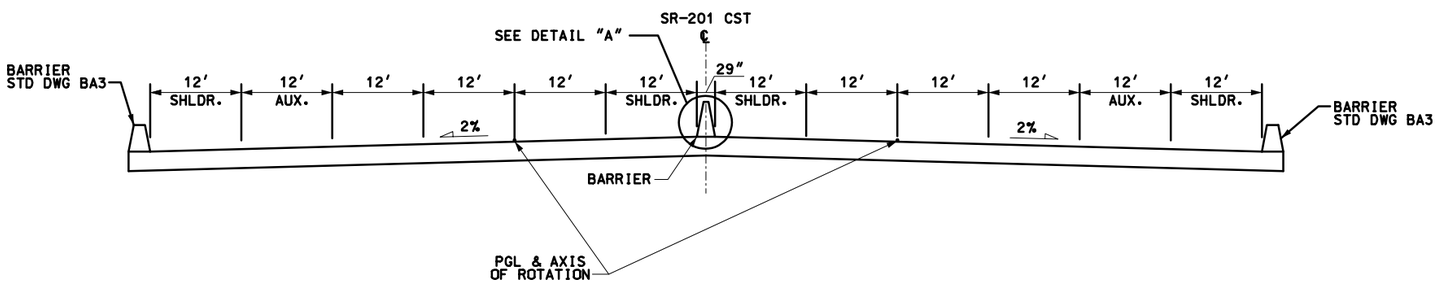

SR 201 TYPICAL TANGENT SECTION
WITH AUXILIARY LANES AND BARRIERS

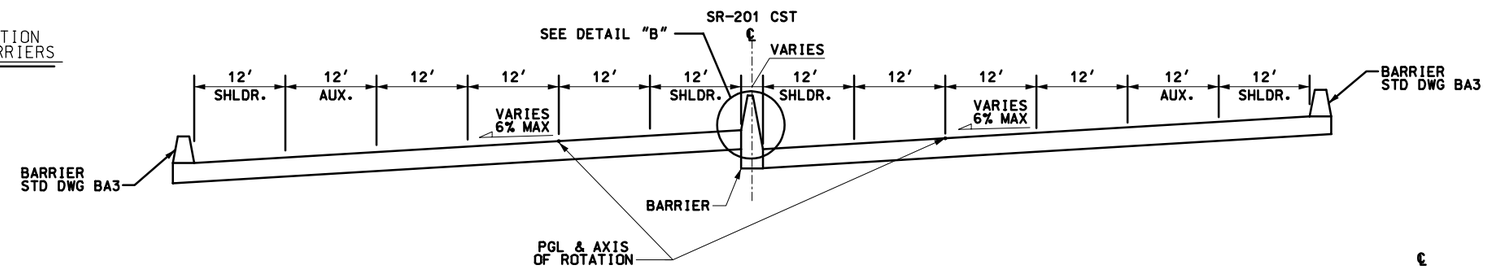

SR 201 TYPICAL SUPERELEVATED SECTION

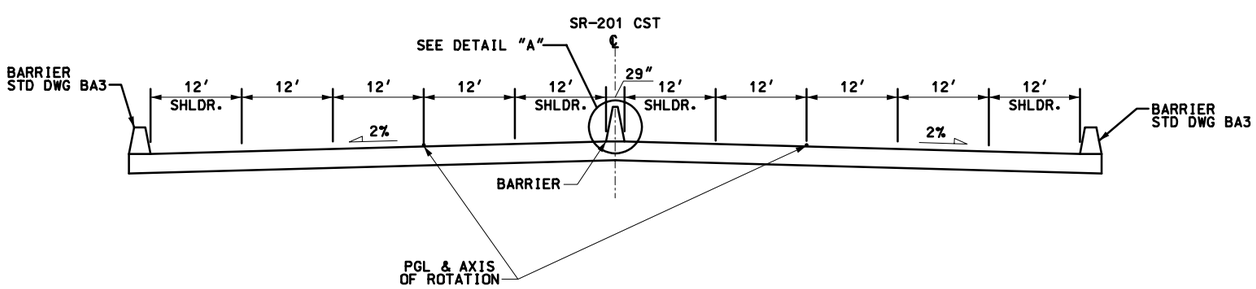

SR 201 TYPICAL TANGENT SECTION WITH BARRIERS

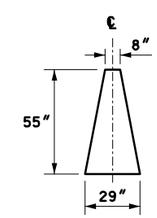

DETAIL "A"

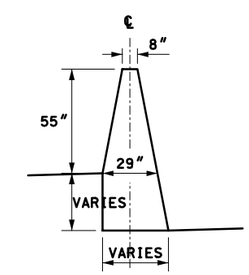

DETAIL "B"

Figure 2-1

TYPICAL SECTIONS
SR-201

July 2003