# Utah Department of Transportation

# Supplemental Specifications and Supplemental Drawings for

# 2017 Standard Specifications and 2017 Standard Drawings

## FOR ROAD AND BRIDGE CONSTRUCTION

**Issued August 29, 2019**

# Memorandum UTAH DEPARTMENT OF TRANSPORTATION

**DATE:** August 29, 2019

**SUBJECT:** Supplemental Specifications and Standard Drawings dated, August 29, 2019

Applicable files for the change are attached. Maintain these files as a supplemental update to the UDOT Standard Specifications and Standard Drawings dated January 9, 2017. No pages are to be removed or replaced in the electronic basic book.

This Supplemental Issue includes all supplemental specifications and supplemental drawings that have been approved and published after January 9, 2017 up to the date listed on this document.

Refer to the Standards and Specifications Web site for individual electronic copies of any Supplemental Specification or Supplemental Drawing. Supplemental Specifications: http://www.udot.utah.gov/go/2017supplementalspecifications
Supplemental Drawings: http://www.udot.utah.gov/go/2017supplementaldrawings

Contact Brad Yeates at (801)965-4807 or by email at **bbyeates@utah.gov** if you have any questions or problems with the electronic files.

Attachments

# Listing of Supplemental Specifications

**Supplemental Issue, August 31, 2017**

| | |
|---|---|
| 01554M | Traffic Control |
| 02744M | Stone Matrix Asphalt (SMA) |
| 02892M | Traffic Signal |

**Supplemental Issue, October 26, 2017**

| | |
|---|---|
| 00555M | Prosecution and Progress |
| 00570M | Definitions |
| 00725M | Scope of Work |
| 00777M | Change Management |
| 01554M | Traffic Control |
| 01601 | Railroad Company Coordination **(New Specification)** |

**Supplemental Issue, February 22, 2018**

| | |
|---|---|
| 00555M | Prosecution and Progress |
| 00570M | Definitions |
| 01601 | Railroad Company Coordination |
| 02845M | High Tension Cable Barrier |
| 02893M | Overhead Sign/VMS Structure |
| 07105 | Waterproofing Membrane |
| 013553M | ATMS Conduit |

**Supplemental Issue, June 28, 2018**

| | |
|---|---|
| 02768M | Pavement Marking Materials |
| 02821M | Chain Link Fencing and Gates |
| 02824 | Fence on Structure **(New Specification)** |
| 02861M | Precast Retaining Noise Walls |
| 03055 | Portland Cement Concrete |
| 03310M | Structural Concrete |
| 03341M | Partial-Depth Precast Concrete Deck Panels |
| 03412M | Prestressed Concrete |
| 05822M | Elastomeric Bearings |
| 05829M | Pourable Joint Seal |

**Supplemental Issue, August 30, 2018**

| | |
|---|---|
| 02056M | Embankment, Borrow, and Backfill |
| 02645M | Precast Concrete Box and Three-Sided Culvert Structures |
| 03934M | Structural Pothole Patching |

**Supplemental Issue, October 25, 2018**

| | |
|---|---|
| 00570M | Definitions |
| 00777M | Change Management |
| 02221M | Remove Structure and Obstruction |
| 02373M | Riprap |
| 02610M | Drainage Pipe |
| 02825 | Cattle Guard |
| 03056M | Self-Consolidating Concrete (SCC) |
| 03152M | Concrete Joint Control |
| 13557M | Variable Message Sign |

**Supplemental Issue, February 28, 2019**

| | |
|---|---|
| 00100M | General Provisions |
| 00120M | Bidding Requirements and Conditions |
| 00820M | Legal Relations and Responsibility to the Public |
| 01355M | Environmental Compliance |
| 02216 | Test Hole Utility **(New Specification)** |
| 02744M | Stone Matrix Asphalt (SMA) |
| 02822M | Right-of-Way Fence and Gate |
| 03211M | Reinforcing Steel and Welded Wire |

**Supplemental Issue, June 27, 2019**

| | |
|---|---|
| 00555M | Prosecution and Progress |
| 01355M | Environmental Compliance |
| 02701 | Pavement Smoothness |
| 02892M | Traffic Signal |
| 02983 | Grinding for Grooved-in Pavement Markings **(New Specification)** |
| 13591M | Traffic Monitoring Detector Loop |

**Supplemental Issue, August 29, 2019**

| | |
|---|---|
| 00747M | Dispute Review Board |
| 01455 | Material Quality Assurance **(Title Change)** |
| 01457 | Aggregate Source Control **(New Specification)** |
| 01554 | Traffic Control |
| 02753M | Full Depth Slab Replacement for Concrete Pavements |
| 03211 | Reinforcing Steel and Welded Wire |
| 13556M | Closed Circuit Television (CCTV) Assembly |

# Listing of Supplemental Drawings

**Supplemental Issue, June 5, 2017**

| | |
|---|---|
| PA 01 | Pedestrian Access |
| PA 02 | Pedestrian Access |
| PA 03 | Pedestrian Access |
| PA 04 | Pedestrian Access |
| PA 05 | Pedestrian Access |

**Supplemental Issue, August 31, 2017**

| | |
|---|---|
| AT 09 | ATMS Cabinet Disconnect and Transformer Frame |
| GW 02A | Concrete Curb and Gutter Types |
| GW 02B | Concrete Curb and Gutter Details |
| GW 03A | Concrete Driveways and Sidewalks |
| SL 01A | Traffic Signal Mast Arm Pole and Luminaire Extension 55 FT |
| SL 01B | Traffic Signal Mast Arm Pole and Luminaire Extension 60 FT – 75 FT |
| SL 01C | Traffic Signal Mast Arm Pole and Luminaire Extension 80 FT – 85 FT |
| SL 01E | Traffic Signal Pole |
| SL 04C | Underground Service Pedestals |
| SN 02C | Wrong Way Signing, Delineation, and Markings for Off Ramps and Divided Highways |
| SN 03 | Speed Reduction Design Sequence |
| SN 06 | Object Markers “T” Intersection and Pavement Transition Guide |
| SN 09A | Tubular Steel Sign Mounting Requirements |
| SN 12A | Slipbase Sign Base (B3) Installation |
| SN 13 | Side Mounted Tubular Steel Sign Base |
| SN 14A | Barrier Mounted Tubular Steel Sign Bases 20 SQ FT or Less |
| SN 14B | Barrier Mounted Tubular Steel Sign Bases (B5A and B5B) |
| SN 15B2 | Freeway Sign Post and Foundation Requirements |
| TC 07 | Median Crossover and 2-Lane, 2-Way Diversion |

**Supplemental Issue, October 26, 2017**

| | |
|---|---|
| AT10A | CCTV Mounting Detail and Wiring Diagram |
| BA 4A | Midwest 31 Inch W-Beam Guardrail Hardware |
| BA 4B1 | W-Beam Guardrail Transition Hardware |
| BA 4B2 | W-Beam Guardrail Transition Layouts Approach End and Midwest 31 Inch Guardrail Trailing End |
| BA 4B4 | Midwest 31 Inch W-Beam Guardrail Median Barrier and Transition Hardware and Layout |
| BA 4C1 | 31 Inch W-Beam Guardrail Anchor Type 1 **(DELETION. Renumbered to BA 4G2)** |
| BA 4C1A | Midwest 31 Inch W-Beam Guardrail Anchor Type 1 **(NEW DRAWING)** |
| BA 4C1B | Midwest 31 Inch W-Beam Guardrail Anchor Type 1 **(NEW DRAWING)** |
| BA 4C2 | W-Beam Guardrail Anchor Type II **(DELETION)** |
| BA 4D1 | Midwest 31 Inch W-Beam Guardrail Installations |
| BA 4D2 | Midwest 31 Inch W-Beam Guardrail Installations |
| BA 4F1 | W-Beam Guardrail Hardware 31 Inch Buried in Backslope Terminal |
| BA 4F3 | W-Beam Guardrail Buried in Backslope Terminal Anchor |

| | |
|---|---|
| BA 4G | W-Beam Guardrail Curve Breakaway Details **(DELETION. Renumbered to BA 4G1)** |
| BA 4G1 | W-Beam Guardrail Curve Breakaway Details **(NEW NUMBER. Was BA 4G)** |
| BA 4G2 | Curved Guardrail Anchor **(TITLE CHANGE. NEW NUMBER. Was BA 4C1)** |
| BA 4J1 | Midwest 31 Inch W-Beam Guardrail Typicals Divided Roadways |
| BA 4J2 | Midwest 31 Inch W-Beam Guardrail Typical Multilane Arterial |
| CC 8A | Grading and Installation Details Softstop End Treatment Type G (MASH) |
| CC 8B | Grading and Installation Details MSKT-SP-MGS End Treatment Type G (MASH) |
| CC 8C | Grading and Installation Details For “3R” Projects End Treatment Type G |
| CC 9 | Grading and Installation Details SRT M10 End Treatment Type H (MASH) **(DELETION)** |
| PV 01 | Joints for Highways with Concrete Traffic Lanes and Shoulders |
| PV 02 | Pavement Approach Slab Details **(DELETION)** |
| PV 03 | Concrete Pavement Details (1 of 2) **(DELETION. Renumbered to PV 02)** |
| PV 04 | Concrete Pavement Details (2 of 2) **(DELETION. Renumbered to PV 03)** |

**Supplemental Issue, February 22, 2018**

| | |
|---|---|
| AT 12 | CCTV Foundations for CCTV Poles |
| BA 4D3 | W-Beam Guardrail Typical Line Post Embedment Special |
| PA 01 | Pedestrian Access **(DELETION)** |
| PA 01 | General Pedestrian Access **(NEW DRAWING)** |
| PA 02 | Pedestrian Access **(DELETION)** |
| PA 02 | Detectable Warning Surface Pedestrian Access **(NEW DRAWING)** |
| PA 03 | Pedestrian Access **(DELETION)** |
| PA 03 | Pedestrian Access Details **(NEW DRAWING)** |
| PA 04 | Pedestrian Access **(DELETION)** |
| PA 04 | Perpendicular and Blended Transition Pedestrian Access **(NEW DRAWING)** |
| PA 05 | Pedestrian Access **(DELETION)** |
| PA 05 | Parallel Pedestrian Access **(NEW DRAWING)** |
| PA 06 | Roundabout, Transit Shelter, and On Street Parking **(NEW DRAWING)** |
| SL 6A | Pedestrian Signal Assembly |
| SL 6D | Overhead Flashing Beacon at an Intersection Crosswalk |
| SL 6E | Post-mounted Flashing Beacon at an Intersection Crosswalk |
| SL 6F | Overhead Flashing Beacon at a Midblock Crosswalk |
| SL 6G | Post-mounting Flashing Beacon at a Midblock Crosswalk |
| SN 2C | Wrong Way Signing, Delineation, and Markings for Off Ramps and Divided Highways |
| SN 3 | Speed Reduction Design Sequence |
| SN 5 | Freeway Crossover Signing |
| SN 6 | Object Markers “T” Intersection and Pavement Transition Guide |
| SN 9A | Tubular Steel Sign Mounting Requirements |
| SN 11A | Small Sign Tubular Steel Post Base with Concrete (B1) (Socket System) |
| SN 12A | Slipbase Sign Base (B3) Installation (Title Change) |
| SN 13 | Side Mounted Tubular Steel Sign Base |
| SN 14A | Barrier Mounted Tubular Steel Sign Bases 20 SQ FT or Less |
| SN 14B | Barrier Mounted Tubular Steel Sign Bases (B5A and B5B) |
| SN 15B2 | Freeway Sign Post and Foundation Requirements |

**Supplemental Issue, June 28, 2018**

| | |
|---|---|
| AT 5 | Ramp Meter Details Signing and Detection |
| AT 20 | Electronic Toll Lanes Control Systems Cabinet Layout |
| AT 21 | Electronic Toll Lanes Control Systems ETC Gantry |
| FG 6 | Chain Link Fence |
| SW 3A | Precast Concrete Noise Wall (1 of 2) |
| SW 4A | Precast Concrete Retaining/Noise Wall (1 of 3) |
| SW 5 | Precast Pilaster Post |
| TC 4B2 | Temporary Portable Rumble Strips |
| TC 4B4 | Shoulder Work Zone Temporary Portable Rumble Strips Freeway/Divided Highway |
| TC 4D2 | Work Zone Specialty Signs |
| TC 7 | Median Crossover and 2-Lane, 2-Way Diversion |
| TC 9 | Work Zone Business Access Signing |

**Supplemental Issue, August 30, 2018**

| | |
|---|---|
| AT 03 | Ramp Meter Detection Layout and Cabinet Placement |
| BA 1C | Concrete Barrier Shoulder Installation |
| BA 4C1A | Midwest 31 Inch W-Beam Guardrail Anchor Type 1 |
| BA 4C1B | Midwest 31 Inch W-Beam Guardrail Anchor Type 1 |
| BA 4G2 | Curved Guardrail Anchor |
| BA 4J1 | Midwest 31 Inch W-Beam Guardrail Typicals Divided Roadways |
| BA 4J2 | Midwest 31 Inch W-Beam Guardrail Typical Multilane Arterial |
| BA 4J3 | Midwest 31 Inch W-Beam Guardrail Typical 2 Lane 2 Way |
| BA 5B2 | Cable Barrier Placement |
| BA 5D1 | Median Cable Barrier W-Beam Double Sided and Freeway Crossover Anchor System (Type C; C.A.T.) |
| BA 5D2 | Median Cable Barrier W-Beam Double Sided and Freeway Crossover Anchor System (Type C; FLEAT-MT) |
| CC 4A | Details for Placement Crash Cushions Type A, B, and D |
| CC 4B | Crash Cushion and Mounted on Median Island |
| CC 4C | Crash Cushion Split Median Island W/RR Crossing |
| CC 5A | Grading and Placement Details Crash Cushion Type C C.A.T. |
| CC 5B | Grading and Placement Details Crash Cushion Type C FLEAT-MT |
| CC 7A | Grading and Installation Details End Treatment Type F Quad Trend 350 |
| CC 7B | Grading and Installation Details End Treatment Type F BEAT-SSCC |
| CC 8A | Grading and Installation Details Softstop End Treatment Type G (MASH) |
| CC 8B | Grading and Installation Details MSKT-SP-MGS End Treatment Type G (MASH) |
| DB 1G | Solid Cover for STD DWG DB 1 |
| DG 04 | Minimum Fill Height and Spacing for Drainage Pipe |
| DG 06 | Steel Safety End Sections |
| DD 1 | Superelevation, Widening and Edge Detail **(DELETION)** |
| DD 2 | Surface Ditch and Benched Slope Details **(DELETION)** |
| DD 3 | Geometric Designs for Freeways **(DELETION)** |
| DD 4 | Entrance Ramps **(DELETION)** |
| DD 5 | Exit Ramps **(DELETION)** |
| DD 6 | Intersection Geometrics **(DELETION)** |
| DD 7 | Freeway Crossover **(DELETION)** |
| DD 8 | Structural Geometric Design Standards for Clearances **(DELETION)** |
| DD 9 | Structural Geometric Design Standards **(DELETION)** |

| | |
|---|---|
| DD 10 | Divided Arterials **(DELETION)** |
| DD 11 | Arterial And Collector Roads **(DELETION)** |
| DD 12 | Local, Frontage, and Access Roads **(DELETION)** |
| DD 13 | Two-Lane Intersection (1 of 2) **(DELETION)** |
| DD 14 | Two-Lane Intersection (2 of 2) **(DELETION)** |
| DD 15 | Embankment For Bridge Placement **(DELETION)** |
| DD 16 | Utility Location Requirements **(DELETION)** |
| DD 17 | Clear Zone and Lateral Offset to Obstruction **(DELETION)** |
| DD 18 | Marked Pedestrian Crosswalk Enhancement Flowchart **(DELETION)** |
| GF 02 | Perpendicular Rectangular Grate and Frame |
| GF 07 | Manhole Cover and Frame |
| GW 8 | Surface Ditch, Benched Slope And Embankment for Bridge Placement Details **(NEW DRAWING)** |
| PA 7 | Marked Pedestrian Crosswalk Enhancement Flowchart **(NEW DRAWING)** |
| PV 11 | Edge Detail **(NEW DRAWING)** |
| RR 8 | Raised Island Placement At Railroad Crossings |
| SL 6B | Pedestrian Signal Crosswalk |
| SL 6C | Pedestrian Hybrid Beacon Crosswalk (HAWK) |
| SL 6D | Overhead Flashing Beacon at an Intersection Crosswalk |
| SL 6E | Post-Mounted Flashing Beacon at an Intersection Crosswalk |
| SL 6F | Overhead Flashing Beacon at Midblock Crosswalk |
| SL 6G | Post-Mounted Flashing Beacon at a Midblock Crosswalk |
| ST 1 | Typical Pavement Markings No Pass Zone and Lane Reduction |
| ST 4 | Entrance Ramp Pavement Markings |
| ST 5 | Exit Ramp Pavement Markings |
| ST 6 | Intersection Pavement Markings |
| ST 7 | Crosswalks, Parking, and Intersection Approaches |
| ST 10 | Bicycle Lane Pavement Markings (Sheet 1 of 2) |
| ST 11 | Bicycle Lane Pavement Markings (Sheet 2 of 2) |
| ST 13 | Two-Lane Intersection Pavement Markings (Sheet 1 of 2) |
| ST 14 | Two-Lane Intersection Pavement Markings (Sheet 2 of 2) |
| ST 16 | Preferential Lane Access Opening Details |

**Supplemental Issue, October 25, 2018**

| | |
|---|---|
| AT 04 | Loop Detector and Wiring Details |
| AT 09 | ATMS Cabinet Disconnect and Transformer Frame |
| SW 1A | Precast Concrete Cattle Guard-General |
| SW 1B | 8’-0” Precast Concrete Cattle Guard End Unit |
| SW 1C | 8’-0” Precast Concrete Cattle Guard Center Unit |
| SW 1D | 6’-0” Precast Concrete Cattle Guard End Unit **(NEW DRAWING)** |
| SW 1E | 6’-0” Precast Concrete Cattle Guard Center Unit **(NEW DRAWING)** |
| SW 1F | Welded End Guard Unit and Traffic Grill Unit **(NEW DRAWING)** |
| SW 1G | Precast Concrete Cattle Guard – Optional CIP Apron **(NEW DRAWING)** |

**Supplemental Issue, February 28, 2019**

| | |
|---|---|
| AT 02 | Ramp Meter Signal Head Details |
| AT 03 | Ramp Meter Detection Layout and Cabinet Placement |
| AT 14 | Solar Traffic Counting Station |
| AT 15 | RWIS Site and Foundation Details |
| AT 21 | Electronic Toll Lanes Control Systems ETC Gantry |
| BA 3B | Cast-in-Place Concrete Constant Slope Barrier – 42 Inch, Electrical Detail |
| FG 2A | Right of Way Fence and Gates (Metal Post) |
| PA 01 | General Pedestrian Access |
| PA 02 | Detectable Warning Surface Pedestrian Access |
| PA 03 | Pedestrian Access Details |
| PA 04 | Perpendicular and Median Refuge Pedestrian Access |
| PA 05 | Parallel Pedestrian Access |
| SN 14 | Median Concrete Barrier Pivot Sign Base **(NEW DRAWING)** |
| SN 14A | Barrier Mounted Tubular Steel Sign Bases 20 SQ FT or Less **(DELETION)** |
| SN 14B | Barrier Mounted Tubular Steel Sign Bases (B5A and B5B) **(DELETION)** |
| SN 15B2 | Freeway Sign Post and Foundation Requirements |
| SN 15C | Freeway Sign Base Post Requirements (B6A, B6B, and B6C) |
| SN 15E | Freeway Sign Fuse Plate Requirements |
| ST 07 | Crosswalks, Parking, and Intersection Approaches |
| SW 1B | 8’-0” Precast Concrete Cattle Guard End Unit |
| SW 1C | 8’-0” Precast Concrete Cattle Guard Center Unit |
| SW 1D | 6’-0” Precast Concrete Cattle Guard End Unit |
| SW 1E | 6’-0” Precast Concrete Cattle Guard Center Unit |

**Supplemental Issue, June 27, 2019**

| | |
|---|---|
| AT 02 | Ramp Meter Signal Head Details |
| AT 09 | ATMS Cabinet and Equipment Disconnect and Transformer Frame |
| AT 14 | Solar Traffic Counting Station |
| BA 1B | Concrete Barrier Median Installation |
| BA 1C | Concrete Barrier Shoulder Installation |
| SL 4C | Underground Service Pedestals |
| SL 6A | Pedestrian Signal Assembly |

**Supplemental Issue, August 29, 2019**

| | |
|---|---|
| AT 10A | Axis CCTV Mounting Detail and Wiring Diagram |
| AT 10B | CCTV Mounting Detail and Wiring Diagram |
| AT 10C | CCTV Mounting Detail and Wiring Diagram **(DELETION)** |
| AT 10D | Camera Cable Splicing Diagrams **(DELETION)** |
| AT 10E | CCTV Dip Switch Settings **(DELETION)** |
| AT 11A | CCTV Pole Mounting Details |
| AT 11B | Non-Intrusive Detector Mounting Details |
| BA 1A1 | Concrete Barrier General Notes and Standard Details 1 of 2 |
| BA 1D | Concrete Barrier Layout |
| BA 2A | Precast Concrete Barrier – 32 Inch New Jersey Shape |
| BA 2B | Precast Concrete Barrier – 32 Inch New Jersey Shape, Sloped End Section (For Speeds ≤ 40 MPH) |

| | |
|---|---|
| BA 2C | Precast Concrete Barrier – 32 Inch New Jersey Shape, Median Small Sign Section **(DELETION)** |
| BA 2D | Cast-In-Place Concrete Barrier – 32 Inch New Jersey Shape, 42 Inch Constant Slope Barrier Transition |
| BA 2E | Precast Concrete Half Barrier – 32 Inch New Jersey Shape |
| BA 3A1 | Cast-In-Place Concrete Constant Slope Barrier- 42 Inch 1 of 3 |
| BA 3A2 | Cast-In-Place Concrete Constant Slope Barrier- 42 Inch 2 of 3 |
| BA 3A4 | Cast-In-Place Concrete Constant Slope Barrier with Scuppers - 42 Inch |
| BA 3B | Cast-In-Place Concrete Constant Slope Barrier- 42 Inch Electrical Details |
| BA 3C1 | Cast-In-Place Concrete Constant Slope Barrier- 42 Inch, Sign Structure Foundation Transition 1 of 2 |
| BA 3D | Cast-In-Place Concrete Constant Slope Barrier- 42 Inch, Median Small Sign Section **(DELETION)** |
| BA 3E1 | Cast-In-Place Concrete Constant Slope Barrier- 42 Inch, TL-5 1 of 2 |
| BA 3E3 | Cast-In-Place Concrete Constant Slope Barrier with Scuppers - 42 Inch TL-5 |
| BA 3F1 | Cast-In-Place Concrete Constant Slope Barrier- 42 Inch, Bridge Parapet Transition 1 of 3 |
| BA 3F2 | Cast-In-Place Concrete Constant Slope Barrier- 42 Inch, Bridge Parapet Transition 2 of 3 |
| BA 3G | Precast Concrete Constant Slope Barrier- 42 Inch |
| BA 3H | Precast Concrete Constant Slope Barrier- 42 Inch, Sloped End Section (For Speeds ≤ 40 MPH) |
| BA 3I1 | Precast Concrete Constant Slope Barrier- 42 Inch, Median Small Sign Section 1 of 2 |
| BA 3J | Precast Concrete Constant Slope Barrier- 42 Inch, 32 Inch New Jersey Shape Transition |
| BA 3K1 | Cast-In-Place Concrete Constant Slope Half Barrier- 42 Inch |
| BA 3K2 | Cast-In-Place Concrete Constant Slope Half Barrier with Scuppers - 42 Inch |
| BA 3K3 | Cast-In-Place Concrete Constant Slope Half Barrier- 42 Inch |
| BA 3K5 | Cast-In-Place Concrete Constant Slope Half Barrier- 42 Inch Constant Slope, 32 Inch New Jersey Shape Barrier Transition |
| BA 3L | Precast Concrete Constant Slope Half Barrier- 42 Inch |
| BA 3M1 | Cast-In-Place Concrete Constant Slope Barrier- 54 Inch 1 of 3 |
| BA 3M2 | Cast-In-Place Concrete Constant Slope Barrier- 54 Inch 2 of 3 |
| BA 3M4 | Cast-In-Place Concrete Constant Slope Barrier with Scuppers - 54 Inch |
| BA 3N1 | Cast-In-Place Concrete Constant Slope Barrier- 54 Inch, Median Small Sign Section 1 of 2 **(DELETION)** |
| BA 3N2 | Cast-In-Place Concrete Constant Slope Barrier- 54 Inch, Median Small Sign Section 2 of 2 **(DELETION)** |
| BA 3O1 | Cast-In-Place Concrete Constant Slope Barrier- 54 Inch, TL-5 1 of 3 |
| BA 3O2 | Cast-In-Place Concrete Constant Slope Barrier- 54 Inch, TL-5 2 of 3 |
| BA 3O4 | Cast-In-Place Concrete Constant Slope Barrier with Scuppers - 54 Inch, TL-5 |
| BA 3P1 | Cast-In-Place Concrete Constant Slope Barrier- 54 Inch, Bridge Parapet Transition 1 of 3 |
| BA 3P2 | Cast-In-Place Concrete Constant Slope Barrier- 54 Inch, Bridge Parapet Transition 2 of 3 |
| BA 3Q1 | Cast-In-Place Concrete Constant Slope Barrier- 54 Inch, 42 Inch Constant Slope Barrier Transition |
| BA 3Q2 | Cast-In-Place Concrete Constant Slope Barrier- 54 Inch, 32 Inch New Jersey Shape Barrier Transition |

| | |
|---|---|
| GW 1A | Raised Island |
| GW 7A | Delineation Application |
| PA 06 | Roundabout, Transit Shelter, and On-Street Parking |
| RR 06 | Pedestrian Controls Street Running Railroad Alignment Signalized Intersections |
| RR 07 | Pedestrian Controls Street Running Railroad Alignment Unsignalized Intersections |
| SL 6D | Overhead Flashing Beacon at an Intersection Crosswalk |
| SL 6E | Post-Mounted Flashing Beacon at an Intersection Crosswalk |
| SL 6F | Overhead Flashing Beacon at a Midblock Crosswalk |
| SL 6G | Post-Mounted Flashing Beacon at a Midblock Crosswalk |
| ST 01 | Typical Pavement Markings **(TITLE CHANGE)** |
| ST 02 | Passing Lane Detail **(DELETION)** |
| ST 02 | School Crossing and School Message **(NEW DRAWING. Renumbered ST 08)** |
| ST 03 | Contrast Pavement Markings for Concrete Pavement **(NEW DRAWING. Renumbered ST 09)** |
| ST 03A | Freeway Climbing Lane Inside Widening Detail **(DELETION)** |
| ST 03B | Freeway Climbing Lane Outside Widening Detail **(DELETION)** |
| ST 04 | Entrance Ramp Pavement Markings **(DELETION)** |
| ST 05 | Exit Ramp Pavement Markings **(DELETION)** |
| ST 06 | Intersection Pavement Markings **(DELETION)** |
| ST 07 | Crosswalks, Parking, and Intersection Approached **(DELETION)** |
| ST 08 | School Crossing and School Message **(DELETION, renumbered as ST 2)** |
| ST 09 | Contrast Pavement Markings for Concrete Pavement **(DELETION, renumbered as ST 03)** |
| ST 10 | Bicycle Lane Pavement Markings (Sheet 1 of 2) **(DELETION)** |
| ST 11 | Bicycle Lane Pavement Markings (Sheet 2 of 2) **(DELETION)** |
| ST 12 | Location of Bicycle Detector Pavement Messages at Intersection **(DELETION)** |
| ST 13 | Two-Lane Intersection Pavement Markings (Sheet 1 of 2) **(DELETION)** |
| ST 14 | Two-Lane Intersection Pavement Markings (Sheet 2 of 2) **(DELETION)** |
| ST 15 | Preferential Lane Signing and Pavement Marking Details **(DELETION)** |
| ST 16 | Preferential Lane Access Opening Details **(DELETION)** |
| ST 17 | Preferential Lane Median Signing Spacing Greater 1 Mile **(DELETION)** |
| ST 18 | Preferential Lane Median Signing Spacing Equal to or Less than 1 Mile **(DELETION)** |

# Supplemental Issue, June 5, 2017

| | |
|---|---|
| PA 01 | Pedestrian Access |
| PA 02 | Pedestrian Access |
| PA 03 | Pedestrian Access |
| PA 04 | Pedestrian Access |
| PA 05 | Pedestrian Access |

## SLOPE TABLE

| | ITEM | MAX. RUNNING SLOPE * | MAX. CROSS SLOPE * |
|---|---|---|---|
| Ⓣ | TURNING SPACE | 2% | 2% (d) |
| Ⓡ | RAMP | 8.3% (a)<br>5.1% MIN | 2% (d) |
| Ⓑ | BLENDED TRANSITION | 5% | 2% (d) |
| Ⓒ | CLEAR SPACE/GUTTER | 5% (b) | 2% (d) |
| Ⓢ | SIDEWALK | – | 2% |
| Ⓕ1 | FLARE WITHIN SIDEWALK | 10% (c) | -- |
| Ⓕ2 | FLARE NOT IN SIDEWALK | 25% (c) | -- |
| | CROSSWALK | 5% | 2% (e) (f) |

* RUNNING SLOPE IS IN THE DIRECTION OF PEDESTRIAN TRAVEL.
CROSS SLOPE IS PERPENDICULAR TO PEDESTRIAN TRAVEL.
** SEE CLEAR SPACE/GUTTER DETAIL C

(a) LENGTH OF RUNNING SLOPE FOR RAMPS IS NOT REQUIRED TO EXCEED 15 FT.

(b) MAINTAIN CONSISTENCY OF CLEAR SPACE RUNNING SLOPE ACROSS ENTIRE CURB CUT. WARP GUTTER PAN TO MEET REQUIRED CLEAR SPACE SLOPE AT CURB CUT.

(c) MEASURE FLARE SLOPE PARALLEL TO CURB LINE.

(d) DO NOT EXCEED THE ROADWAY PROFILE GRADE FOR THE CROSS SLOPE AT CROSSWALKS WITHOUT A STOP OR YIELD SIGN AND AT MID-BLOCK CROSWALKS.

(e) DO NOT EXCEED 5 PERCENT CROSS SLOPE AT CROSSWALKS AT INTERSECTIONS WITHOUT A STOP OR YIELD SIGN.

(f) DO NOT EXCEED A CROSS SLOPE EQUAL TO THE STREET OR HIGHWAY GRADE AT MID-BLOCK CROSSWALKS.

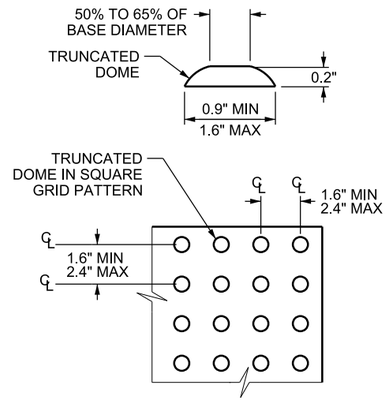


**DETECTABLE WARNING SURFACE DETAIL A**

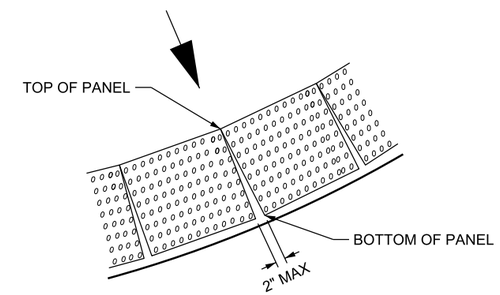


**DETECTABLE WARNING SURFACE PANEL GAP DETAIL B**

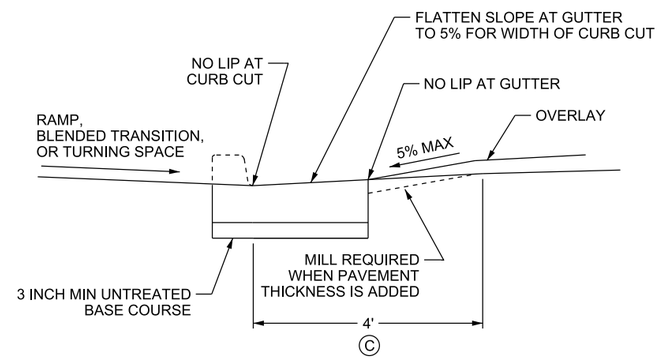


**CLEAR SPACE/GUTTER DETAIL C**

**DESIGN-ONLY NOTE:**

A. DESIGN THE ITEMS IN THE SLOPE TABLE ACCORDING TO THE LISTED MAXIMUM OR MINIMUM VALUES.

**GENERAL NOTES APPLICABLE TO THE PA SERIES:**

1.CONSTRUCT THE ITEMS IN THE SLOPE TABLE ACCORDING TO THE LISTED MAXIMUM OR MINIMUM VALUES.

2. SITE CONDITIONS WILL VARY. CONFIGURATION OF RAMP, BLENDED TRANSITION, TURNING SPACE, AND CLEAR SPACE MAY BE CHANGED, BUT THEY MUST MEET DIMENSIONS AND SLOPES SHOWN HERE. THE USE OF ITEMS SUCH AS FLARES AND CURBWALLS ARE AT THE DISCRETION OF THE ENGINEER.

3. PERPENDICULAR AND PARALLEL RAMPS SHOWN ON STD DWG PA 2 AND THE COMBINATION ACCESS NEXT TO GUTTER DETAIL SHOWN ON STD DWG PA 4 ARE ACCEPTABLE FOR USE AT MID-BLOCK OR CORNER INSTALLATIONS. REFER TO BLENDED TRANSITION DETAIL ON STD DWG PA 2 AND STD DWGS PA 3 AND PA 4 FOR OTHER EXAMPLES OF CORNER INSTALLATIONS.

4. RAMP GRADE BREAK MUST BE PERPENDICULAR TO THE RUNNING SLOPE.

5. TURNING SPACE WIDTH: USE THE LARGER OF THE CURB CUT WIDTH OR A 4 FT MINIMUM WIDTH X 4 FT MINIMUM DEPTH.

6. TURNING SPACE DEPTH: USE A 4 FT MINIMUM DEPTH WHEN THE TURNING SPACE IS UNCONSTRAINED. USE A 5 FT MINIMUM DEPTH WHEN THE TURNING SPACE IS CONSTRAINED. THE TURNING SPACE IS CONSTRAINED WHEN THERE IS A BARRIER SUCH AS A CURB ON THE REAR OF A PERPENDICULAR RAMP OR ON 2 OR MORE OF THE SIDES OF A PARALLEL RAMP.

7. CONSTRUCT BLENDED TRANSITIONS WITHOUT A TURNING SPACE ONLY WHEN TECHNICAL INFEASIBILITY PREVENTS THE INSTALLATION OF A TURNING SPACE.

8. LOCATE CURB CUT WITHIN CROSSWALK.

9. USE A 8 FT MINIMUM CURB CUT FOR BI-DIRECTIONAL CROSSWALKS. USE A 4 FT MINIMUM CURB CUT UPON APPROVAL OF THE REGION TRAFFIC OPERATIONS ENGINEER.

10. PROVIDE DETECTABLE WARNING SURFACE ACCORDING TO MANUFACTURER'S RECOMMENDATIONS FOR FULL WIDTH OF CURB CUT AND 2 FT MINIMUM IN THE DIRECTION OF PEDESTRIAN TRAVEL. SEE DETECTABLE WARNING SURFACE DETAIL A FOR DIMENSIONS.

11. LOCATE DETECTABLE WARNING SURFACE SO THE OUTSIDE CORNER NEAREST THE STREET IS WITHIN 1 INCH OF THE BACK OF CURB.

12. PLACE DETECTABLE WARNING SURFACE PANELS ON A RADIUS IN A STRAIGHT LINE OR ACCORDING TO DETAIL B. TOP CORNERS OF ADJACENT PANELS TO TOUCH, BOTTOM CORNERS OF ADJACENT PANELS TO HAVE A 2 INCHES MAXIMUM GAP.

13. GRIND OFF REMAINING PORTION OF ANY CUT DOMES WHEN DETECTABLE WARNING SURFACE IS CUT. SEAL ALL CUT PANEL EDGES TO PREVENT WATER DAMAGE.

14. PROVIDE DETECTABLE WARNING SURFACE COLOR THAT CONTRASTS WITH ADJACENT WALKING SURFACE, GUTTER, STREET, AND PEDESTRIAN ACCESS ROUTE, EITHER LIGHT-ON-DARK OR DARK-ON-LIGHT.

15. CLEAR SPACE SIZE: USE A 4 FT MINIMUM DEPTH AND THE LARGER OF THE CURB CUT WIDTH OR A 4 FT MINIMUM WIDTH.

16. USE CLASS AA(AE) CONCRETE.

17. USE UNTREATED BASE COURSE UNDER ALL CONCRETE FLATWORK.

18. REFER TO STD DWG SL 7 FOR DISTANCE TO PEDESTRIAN SIGNAL BUTTON.

19. PLACE A R9-3 NO PEDESTRIAN SIGN AT BOTH ENDS OF THE CROSSWALK WHEN PEDESTRIANS ARE PROHIBITED FROM CROSSING AN UNMARKED CROSSWALK AT AN INTERSECTION.

SUPPLEMENTAL DRAWING

REVISIONS

| NO. | DATE | APPR. | REMARKS |
|---|---|---|---|
| 1 | 04/06/2017 | JBY | ADDED DESIGN-ONLY NOTE. CHANGED NOTE 1. |

**UTAH DEPARTMENT OF TRANSPORTATION**
STANDARD DRAWINGS FOR ROAD AND BRIDGE CONSTRUCTION
SALT LAKE CITY, UTAH

RECOMMENDED FOR APPROVAL — APR. 06, 2017 DATE
CHAIRMAN STANDARDS COMMITTEE APPROVED — APR. 06, 2017 DATE
DEPUTY DIRECTOR

STANDARD DRAWING TITLE: PEDESTRIAN ACCESS

STD. DWG. NO. PA 1

DGN File:Q:\StandardsandSpecsSection\2017Section\Supplemental Dwgs\2017_Approvals\Suppl_04172017_Approval - Copy\DGNs\PA01.dgn
19-APR-2017

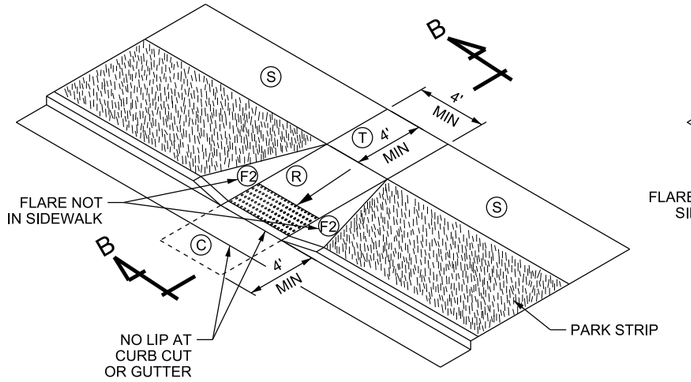


## PERPENDICULAR RAMP NOT WITHIN SIDEWALK

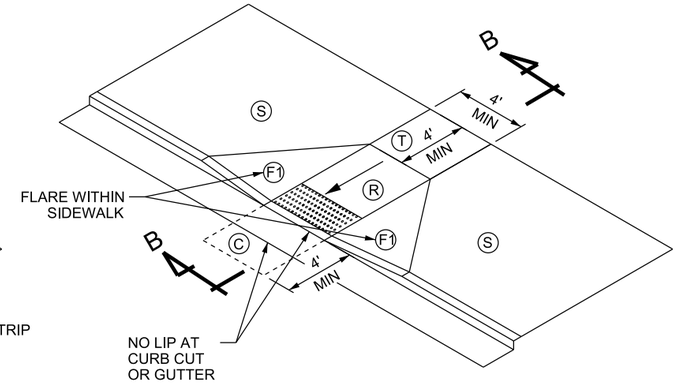


## PERPENDICULAR RAMP WITHIN SIDEWALK

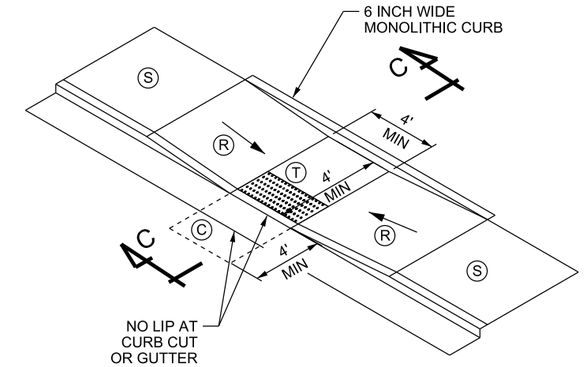


## PARALLEL RAMP WITHIN SIDEWALK

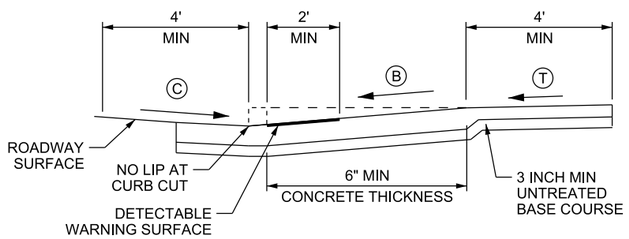


## SECTION A-A

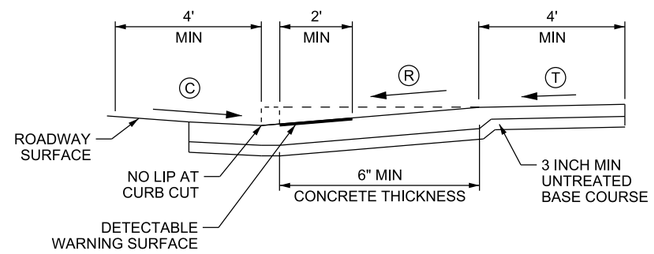


## SECTION B-B

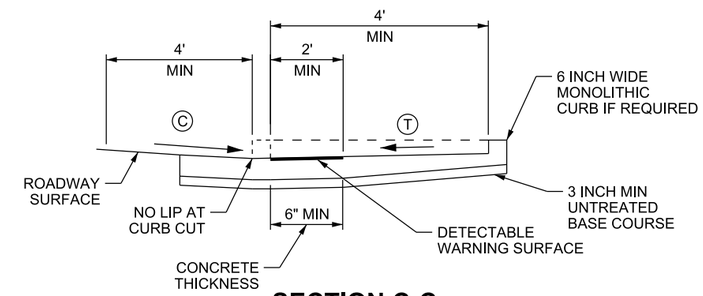


## SECTION C-C

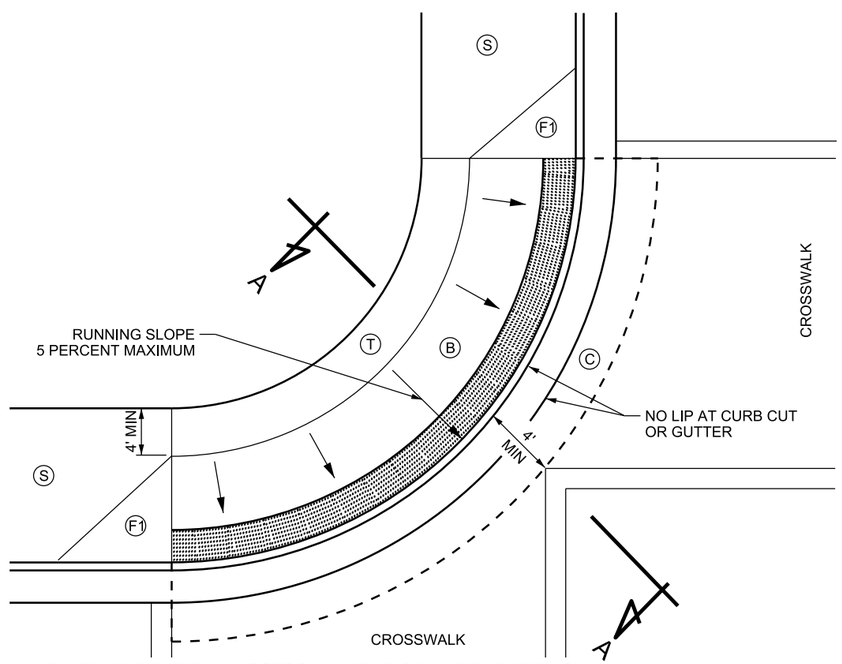


## BLENDED TRANSITION AT CORNER DETAIL

SEE NOTE 5

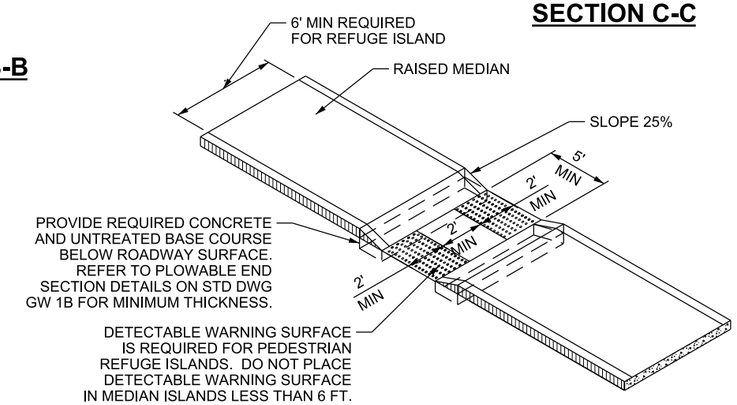


## MEDIAN BREAK EXAMPLE

**DESIGN-ONLY NOTE:**

A. DESIGN THE ITEMS IN THE SLOPE TABLE SHOWN ON PA 1 ACCORDING TO THE LISTED MAXIMUM OR MINIMUM VALUES.

**NOTES:**

1. CONSTRUCT THE ITEMS IN THE SLOPE TABLE SHOWN ON PA 1 ACCORDING TO THE LISTED MAXIMUM OR MINIMUM VALUES.
2. REFER TO STD DWG PA 1 FOR GENERAL NOTES PERTAINING TO THIS DRAWING.
3. REFER TO STD DWG PA 1 FOR SLOPE TABLE, DETECTABLE WARNING SURFACE DETAIL, DETECTABLE WARNING SURFACE PANEL GAP DETAIL, AND CLEAR SPACE/GUTTER DETAIL.
4. PERPENDICULAR AND PARALLEL RAMPS SHOWN ON THIS DRAWING ARE ACCEPTABLE FOR USE AT MID-BLOCK OR CORNER INSTALLATIONS.
5. REFER TO BLENDED TRANSITION DETAIL ON THIS DRAWING AND STD DWG PA 3 AND PA 4 FOR OTHER EXAMPLES OF CORNER INSTALLATIONS.
6. USE A 8 FT MINIMUM CURB CUT FOR BI-DIRECTIONAL CROSSWALKS. USE A 4 FT MINIMUM CURB CUT UPON APPROVAL OF THE REGION TRAFFIC OPERATIONS ENGINEER.

SUPPLEMENTAL DRAWING

REVISIONS

| NO. | DATE | APPR. | REMARKS |
|---|---|---|---|
| 1 | 04/06/2017 | JBY | NOTE 1 ADDED AND "DESIGN-ONLY" NOTE ADDED. |

UTAH DEPARTMENT OF TRANSPORTATION
STANDARD DRAWINGS FOR ROAD AND BRIDGE CONSTRUCTION
SALT LAKE CITY, UTAH

RECOMMENDED FOR APPROVAL — APR. 06, 2017 DATE
CHAIRMAN STANDARDS COMMITTEE APPROVED — APR. 06, 2017 DATE
DEPUTY DIRECTOR

PEDESTRIAN ACCESS
STANDARD DRAWING TITLE

STD. DWG. NO.
PA 2

DGN File: Q:\Standards and Specs Section\2017 Section\Supplemental Dwgs\2017 Approvals\Suppl.04172017 Approval - Copy\DGNs\PA02.dgn
19-APR-2017

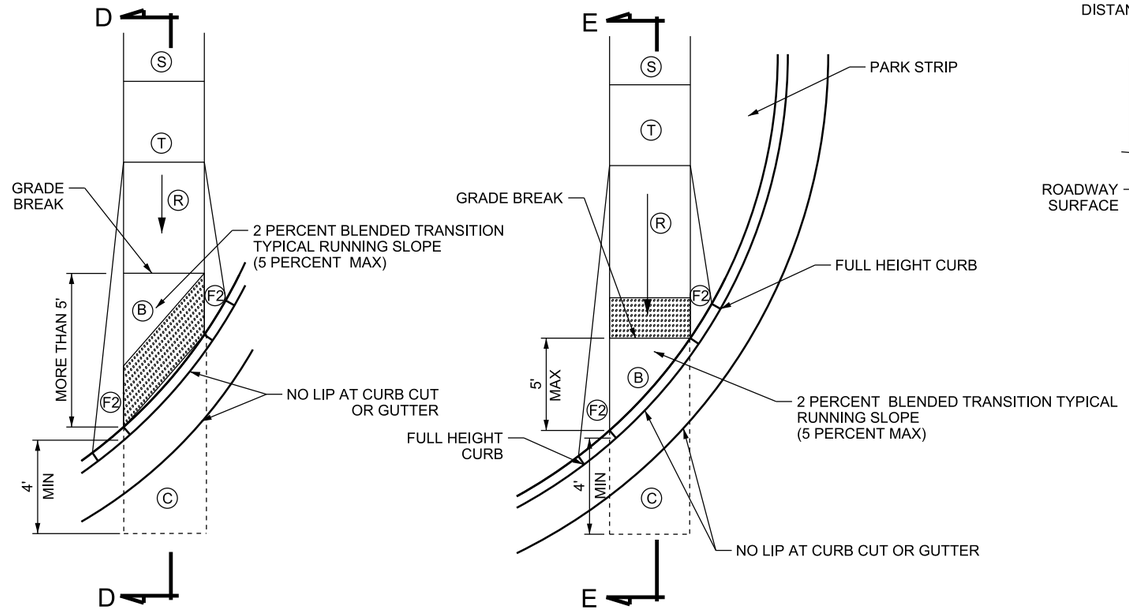


## DIRECTIONAL PERPENDICULAR CORNER RAMP EXAMPLES

SEE NOTE 3

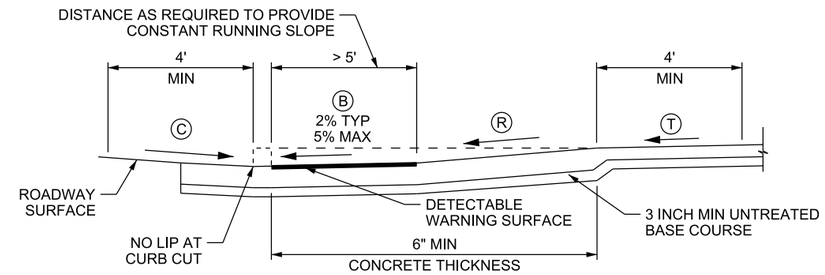


## SECTION D-D

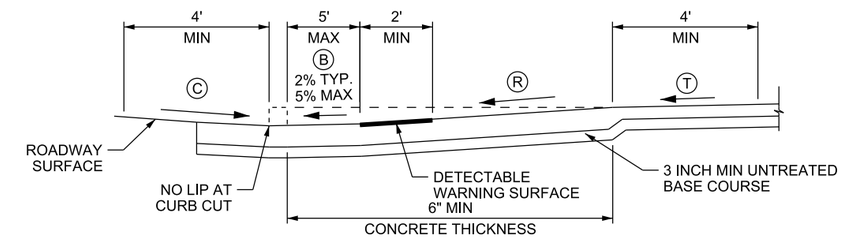


## SECTION E-E

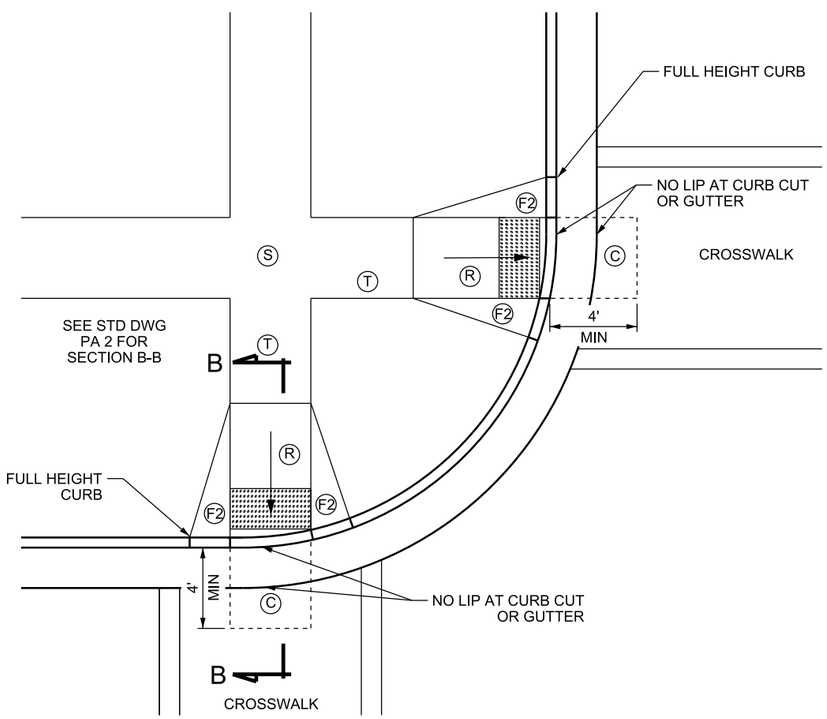


## DUAL PERPENDICULAR CORNER RAMP EXAMPLE

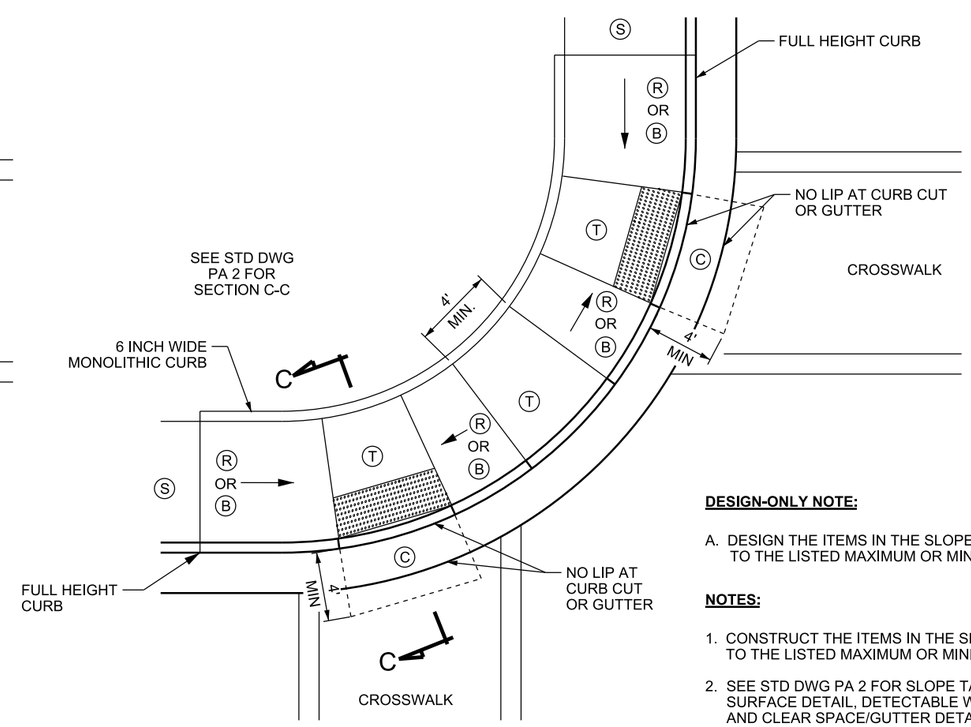


## DUAL PARALLEL CORNER RAMP EXAMPLE

**DESIGN-ONLY NOTE:**

A. DESIGN THE ITEMS IN THE SLOPE TABLE SHOWN ON PA 1 ACCORDING TO THE LISTED MAXIMUM OR MINIMUM VALUES.

**NOTES:**

1. CONSTRUCT THE ITEMS IN THE SLOPE TABLE SHOWN ON PA 1 ACCORDING TO THE LISTED MAXIMUM OR MINIMUM VALUES.
2. SEE STD DWG PA 2 FOR SLOPE TABLE, DETECTABLE WARNING SURFACE DETAIL, DETECTABLE WARNING SURFACE PANEL GAP DETAIL, AND CLEAR SPACE/GUTTER DETAIL.
3. BLENDED TRANSITIONS MAY NOT REQUIRE RAMP AND TURNING SPACE.

SUPPLEMENTAL DRAWING

REVISIONS

| NO. | DATE | APPR. | REMARKS |
|---|---|---|---|
| 1 | 04/06/2017 | JBY | NOTE 1 CHANGED AND "DESIGN-ONLY" NOTE ADDED. |

**UTAH DEPARTMENT OF TRANSPORTATION**
STANDARD DRAWINGS FOR ROAD AND BRIDGE CONSTRUCTION
SALT LAKE CITY, UTAH

RECOMMENDED FOR APPROVAL — APR. 06, 2017 DATE
CHAIRMAN STANDARDS COMMITTEE APPROVED — APR. 06, 2017 DATE
DEPUTY DIRECTOR

STANDARD DRAWING TITLE: PEDESTRIAN ACCESS

STD. DWG. NO. PA 3

DGN File: Q:\StandardsandSpecsSection\2017Section\SupplementalDwgs\2017_Approvals\Suppl_04172017_Approval - Copy\DGNs\PA03.dgn
19-APR-2017

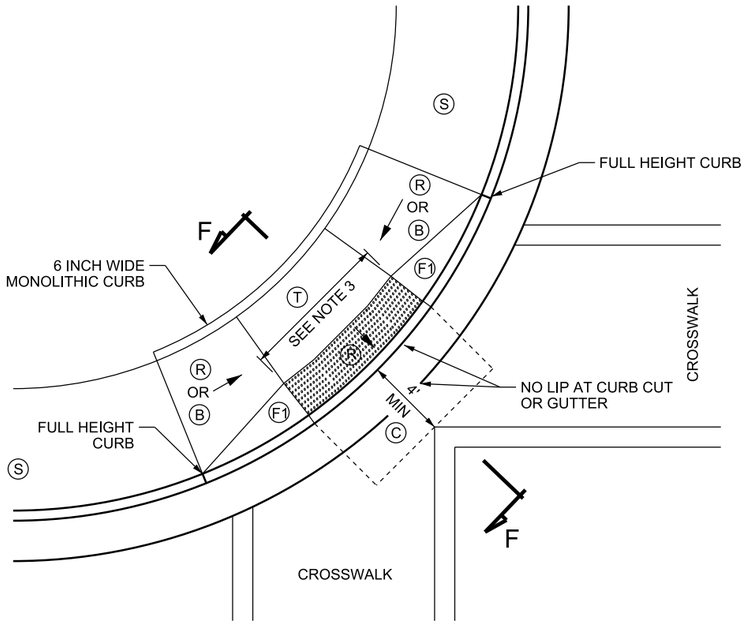


## COMBINATION ACCESS AT APEX OF A CORNER EXAMPLE FOR BI-DIRECTIONAL CROSSWALK NEXT TO GUTTER

SEE NOTE 6

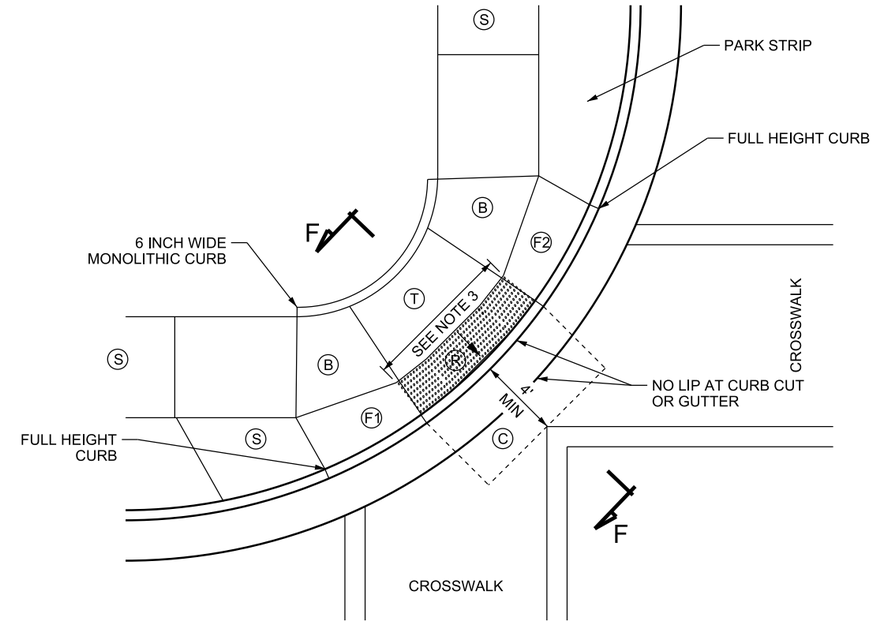


## COMBINATION ACCESS AT APEX OF A CORNER EXAMPLE FOR BI-DIRECTIONAL CROSSWALK WITH PARK STRIP OR WIDE SIDEWALK

SEE NOTE 6

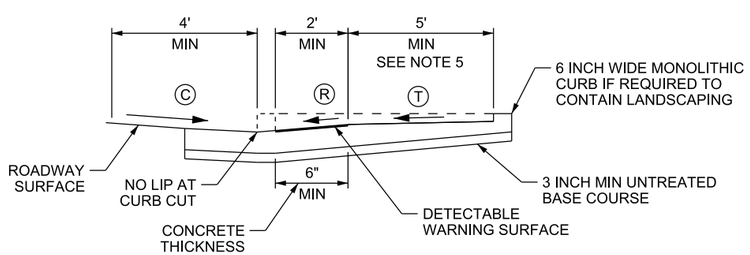


## SECTION F-F

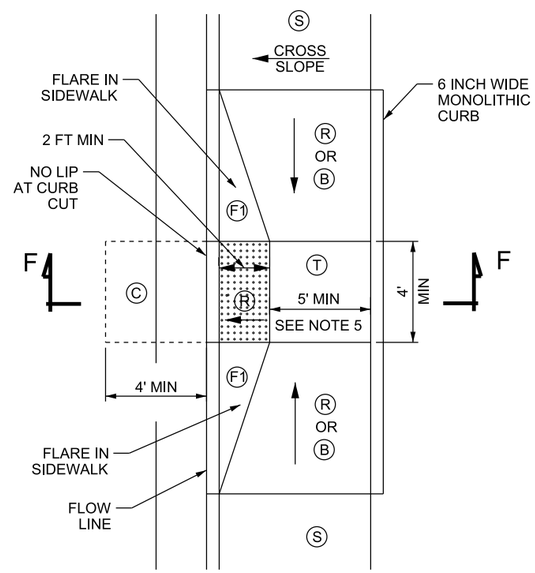


## COMBINATION ACCESS NEXT TO GUTTER DETAIL

**DESIGN-ONLY NOTE:**

A. DESIGN THE ITEMS IN THE SLOPE TABLE SHOWN ON PA 1 ACCORDING TO THE LISTED MAXIMUM OR MINIMUM VALUES.

**NOTES:**

1. CONSTRUCT THE ITEMS IN THE SLOPE TABLE SHOWN ON PA 1 ACCORDING TO THE LISTED MAXIMUM OR MINIMUM VALUES.
2. REFER TO STD DWG PA 1 FOR GENERAL NOTES PERTAINING TO THIS DRAWING.
3. REFER TO STD DWG PA 1 FOR SLOPE TABLE, DETECTABLE WARNING SURFACE DETAIL, DETECTABLE WARNING SURFACE PANEL GAP DETAIL, AND CLEAR SPACE/GUTTER DETAIL.
4. USE A 8 FT MINIMUM CURB CUT FOR BI-DIRECTIONAL CROSSWALKS. USE A 4 FT MINIMUM CURB CUT UPON APPROVAL OF THE REGION TRAFFIC OPERATIONS ENGINEER.
5. TURNING SPACE DEPTH: USE A 5 FT MINIMUM DEPTH WHEN THE TURNING SPACE IS CONSTRAINED. THE TURNING SPACE IS CONSTRAINED WHEN THERE IS A BARRIER SUCH AS A CURB ON THE REAR OF A PERPENDICULAR RAMP OR ON 2 OR MORE OF THE SIDES OF A PARALLEL RAMP.
6. THE TURNING SPACE IN SECTION F-F SERVES BOTH PARALLEL AND PERPENDICULAR RAMPS. THE MINIMUM DEPTH OF THE TURNING SPACE IS 4 FT WHEN THE REAR OF THE TURNING SPACE OF A PERPENDICULAR RAMP IS NOT CONSTRAINED.
7. DUAL RAMPS PREFERRED. USE COMBINATION ACCESS ONLY WITH APPROVAL OF THE REGION TRAFFIC ENGINEER.

SUPPLEMENTAL DRAWING

REVISIONS

| NO. | DATE | APPR. | REMARKS |
|---|---|---|---|
| 1 | 04/06/2017 | JBY | NOTE 1 ADDED AND "DESIGN-ONLY" NOTE ADDED. |

**UTAH DEPARTMENT OF TRANSPORTATION**
STANDARD DRAWINGS FOR ROAD AND BRIDGE CONSTRUCTION
SALT LAKE CITY, UTAH

RECOMMENDED FOR APPROVAL — APR. 06, 2017 DATE
CHAIRMAN STANDARDS COMMITTEE APPROVED — APR. 06, 2017 DATE
DEPUTY DIRECTOR

STANDARD DRAWING TITLE: PEDESTRIAN ACCESS

STD. DWG. NO. PA 4

DGN File: Q:\StandardsandSpecsSection\2017Section\SupplementalDwgs\2017_Approvals\Suppl.04172017_Approval - Copy\DGNs\PA04.dgn
19-APR-2017

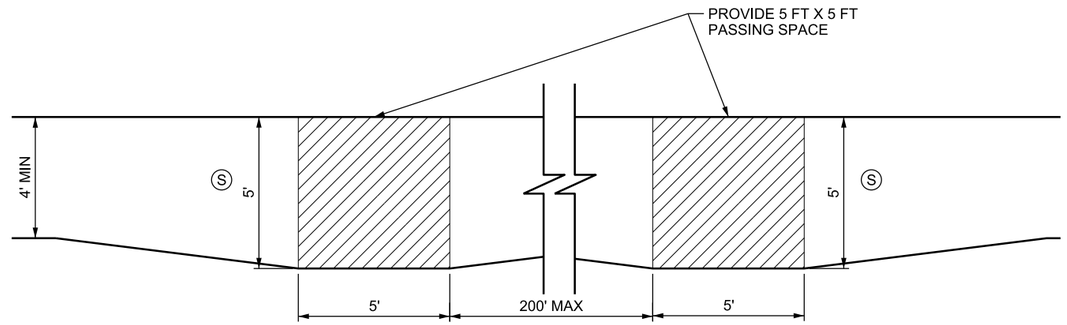


## PASSING SPACE DETAIL A

SEE NOTES 1, 2

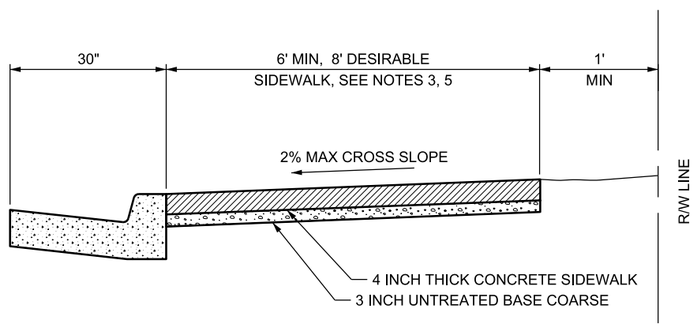


## NO PARKSTRIP DETAIL B

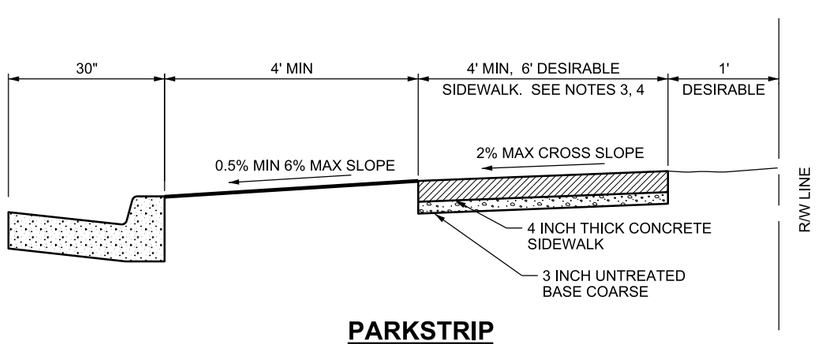


## PARKSTRIP DETAIL C

**DESIGN-ONLY NOTE**

A. DESIGN THE ITEMS IN THE SLOPE TABLE SHOWN ON PA 1 ACCORDING TO THE LISTED MAXIMUM OR MINIMUM VALUES.

**NOTES:**

1. CONSTRUCT THE ITEMS IN THE SLOPE TABLE SHOWN ON PA 1 ACCORDING TO THE LISTED MAXIMUM OR MINIMUM VALES.
2. INSTALL 8:1 OR FLATTER TAPER, WHEN CHANGING THE WIDTH OF SIDEWALK.
3. PROVIDE A 5 FT X 5 FT PASSING SPACE ON PEDESTRIAN ACCESS ROUTES LESS THAN 5 FT WIDE, AT INTERVALS OF 200 FT MAXIMUM.
4. PROVIDE A 5 FT x 5 FT PASSING AREA ON SIDEWALKS OF LESS THAN 5 FT WIDE WHEN THERE IS NOT A HARD SURFACE PASSING AREA OF 5 FT MINIMUM WIDTH IN A 200 FT SEGMENT.
5. A MINIMUM OF 7 FT IS REQUIRED AT BACK OF SIDEWALK AT DRIVEWAY LOCATIONS TO MEET GRADING REQUIREMENTS.

SUPPLEMENTAL DRAWING

REVISIONS

| NO. | DATE | APPR. | REMARKS |
|---|---|---|---|
| 1 | 04/06/2017 | JBY | NOTE 3 CHANGED AND RENUMBERED. "DESIGN-ONLY" NOTE ADDED. |

**UTAH DEPARTMENT OF TRANSPORTATION**
STANDARD DRAWINGS FOR ROAD AND BRIDGE CONSTRUCTION
SALT LAKE CITY, UTAH

RECOMMENDED FOR APPROVAL — APR. 06, 2017 DATE
CHAIRMAN STANDARDS COMMITTEE APPROVED — APR. 06, 2017 DATE
DEPUTY DIRECTOR — DATE

PEDESTRIAN ACCESS
STANDARD DRAWING TITLE

STD. DWG. NO.
PA 5

DGN File: Q:\Standardsand\Specs\Section\2017Section\Supplemental\Dwgs\2017_Approvals\Suppl.04172017_Approval - Copy\DGNs\PA05.dgn
19-APR-2017

# Supplemental Issue, August 31, 2017

**Supplemental Specifications**

| | |
|---|---|
| 01554M | Traffic Control |
| 02744M | Stone Matrix Asphalt (SMA) |
| 02892M | Traffic Signal |

**Supplemental Drawings**

| | |
|---|---|
| AT 09 | ATMS Cabinet Disconnect and Transformer Frame |
| GW 02A | Concrete Curb and Gutter Types |
| GW 02B | Concrete Curb and Gutter Details |
| GW 03A | Concrete Driveways and Sidewalks |
| SL 01A | Traffic Signal Mast Arm Pole and Luminaire Extension 55 FT |
| SL 01B | Traffic Signal Mast Arm Pole and Luminaire Extension 60 FT – 75 FT |
| SL 01C | Traffic Signal Mast Arm Pole and Luminaire Extension 80 FT – 85 FT |
| SL 01E | Traffic Signal Pole |
| SL 04C | Underground Service Pedestals |
| SN 02C | Wrong Way Signing, Delineation, and Markings for Off Ramps and Divided Highways |
| SN 03 | Speed Reduction Design Sequence |
| SN 06 | Object Markers “T” Intersection and Pavement Transition Guide |
| SN 09A | Tubular Steel Sign Mounting Requirements |
| SN 12A | Slipbase Sign Base (B3) Installation |
| SN 13 | Side Mounted Tubular Steel Sign Base |
| SN 14A | Barrier Mounted Tubular Steel Sign Bases 20 SQ FT or Less |
| SN 14B | Barrier Mounted Tubular Steel Sign Bases (B5A and B5B) |
| SN 15B2 | Freeway Sign Post and Foundation Requirements |
| TC 07 | Median Crossover and 2-Lane, 2-Way Diversion |

**Supplemental Specification**
**2017 Standard Specification Book**

**SECTION 01554M**

# TRAFFIC CONTROL

**Delete Article 2.2, Paragraph C1a and replace with the following:**

a. Wear safety apparel meeting the requirements of ANSI/ISEA "American National Standard for High-Visibility Apparel and Headwear" or equivalent revisions and labeled as meeting the current ANSI/ISEA publication year, standard performance for Class 3 risk exposure.

**Supplemental Specification**
**2017 Standard Specification Book**

**SECTION 02744M**

# STONE MATRIX ASPHALT (SMA)

**Delete Article 1.6, paragraph F and replace with the following:**

F. The Department rejects lots:
   1. If the PT for any individual gradation measurement listed in Table 3 is less than 52 percent.
   2. If the PT for asphalt binder content or density is less than 60 percent.
   3. The Engineer may accept a reject lot. Refer to Section 01456.
      a. A price reduction of 35 percent of the pay item or $30 per ton, whichever is greater, will be assessed.
      b. The lot will not be eligible for any incentive.

**Supplemental Specification**
**2017 Standard Specification Book**

**SECTION 02892M**

# TRAFFIC SIGNAL

**Delete Article 2.3, Paragraph A and replace with the following:**

A. Power Service/Lighting Conductors
   1. Refer to Section 16530
   2. Stranded copper conductors only
   3. Conductors sized per NEC (minimum 10 AWG RHH RHW-2, XLP USE-2 or approved equivalent)
      a. Power Service Conductors
         1) Continuous red insulation color for AC+
         2) Continuous white insulation color for neutral
      b. Lighting conductors (240 Volt unless specified otherwise)
         1) Continuous blue insulation color for AC+
         2) Continuous white insulation color for neutral

**Delete Article 2.3, Paragraph C and replace with the following:**

C. Bonding/Grounding Cable
   1. Size bonding wire according to NEC article 250 (minimum 6 AWG, copper, solid, bare, soft-drawn)

**Add the following to Article 2.3, Paragraph D Radar Detection Cable:**

   2. 2-Conductor 14 AWG shielded Loop Home Run Cable conforming to IMSA 50-2 specifications

**Delete Article 2.6, Subparagraph B4 and replace with the following:**

   4. Enclose supporting circuitry within the button with wiring to the push button terminated on two ¼ inch - 20 brass screw terminals

**Delete Article 3.16, Paragraph B and replace with the following:**

B. Bonding Conductor (Ground)
   1. Run continuously and bond to each metal signal pole or luminaire pole.
   2. Attach one wire around the signal pole base bolt with a washer. Each additional wire will be attached with a split-bolt.
   3. Bond the grounding system conductor to the ground rod in each junction box where 50 V or greater is present.
      a. Ground rod clamps (acorns) are required for connecting the bond/ground wire to the ground rod.
      b. Only (1) wire per clamp is allowed. Only (1) clamp per ground rod is allowed.
      c. Combine additional wires using split-bolts.
      d. Wire terminal busses of any type are not allowed in signal related junction boxes or poles.

**Add the following to Article 3.22 Install Radar Detection:**

B. Install auxiliary ground wire from all stop bar radar units to the signal cabinet (not needed for dilemma zone or extended radar detection).
   1. Provide 12 AWG, stranded, green insulated, UV rated wire.
   2. Attach wire to the radar unit exterior grounding lug with forked spade and to the grounding bus in signal cabinet.
   3. Auxiliary ground wire may be spliced at the radar unit home-run splice point within the splice kit. Ground wires may be combined at splice points to maintain one ground wire per roadway crossing.

C. Install an auxiliary power cable to limit voltage drop, for radar unit installations over 500 feet from the signal cabinet (as measured by cable length).
   1. Provide a 2-conductor 14 AWG, IMSA 50-2 cable.
   2. Do not use power wires (RED and BLACK) from the manufacturer recommended multi-wire cable.
   3. Land the auxiliary power cable at the cabinet and splice point as follows:
      a. Black to Black radar unit port/wire.
      b. Clear to Red radar unit port/wire.

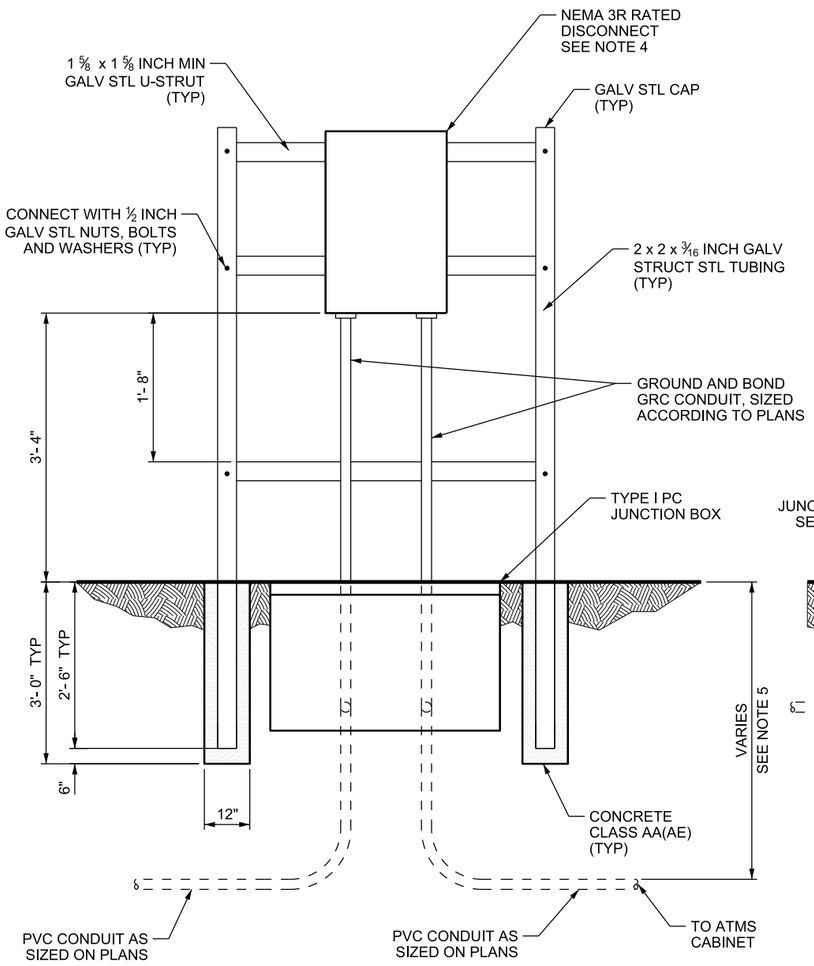


## A SUPPLEMENTAL DISCONNECT FRAME

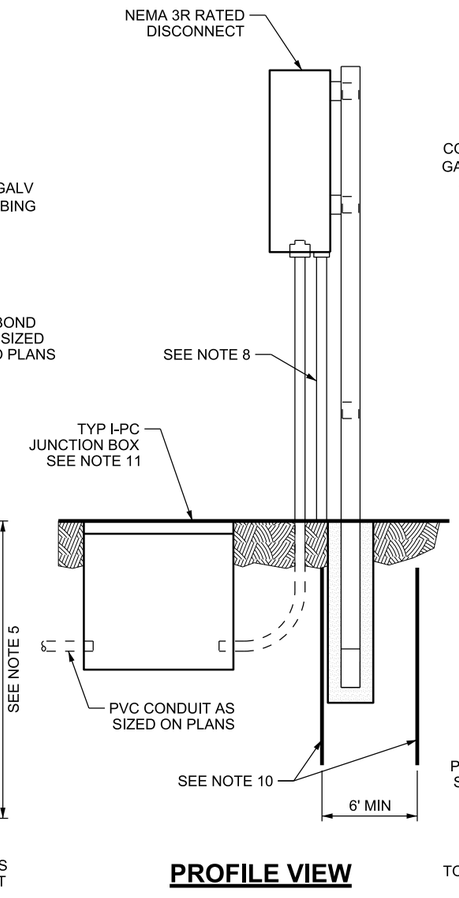


## PROFILE VIEW

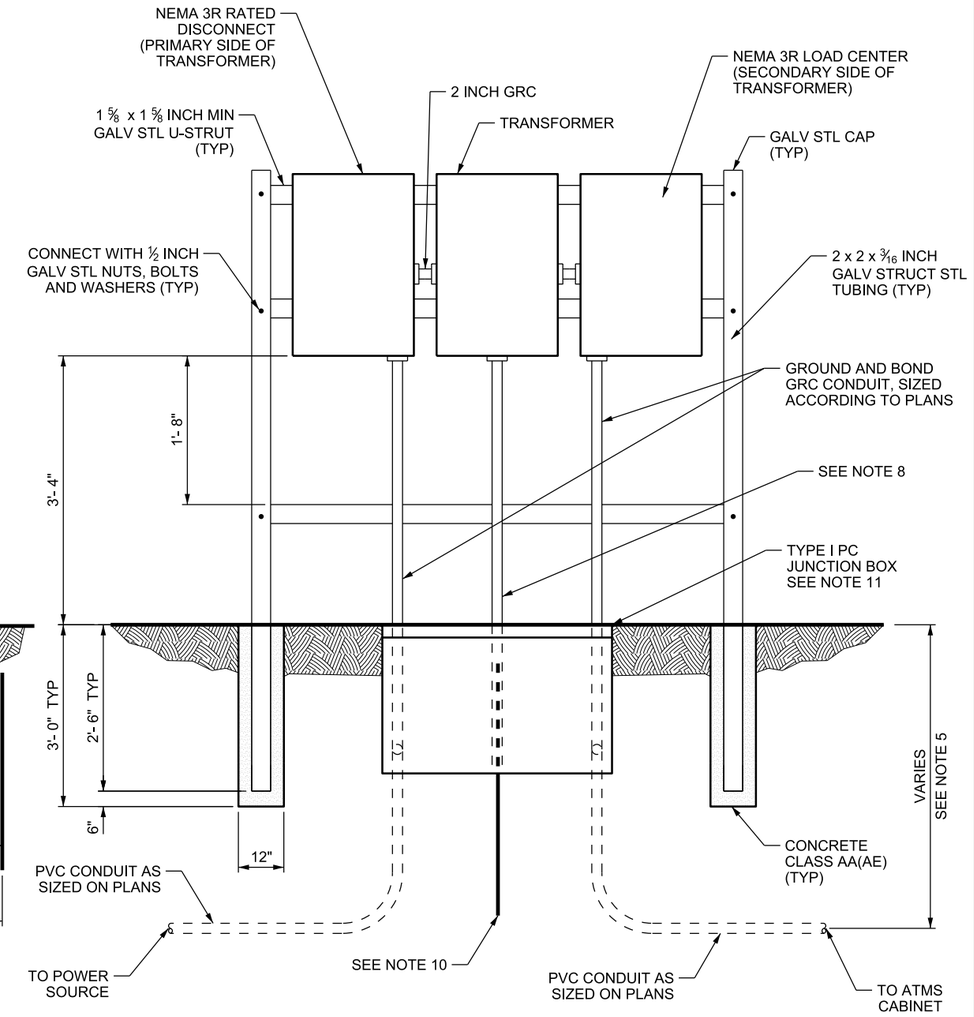


## B SUPPLEMENTAL DISCONNECT WITH TRANSFORMER FRAME

**NOTES:**

1. LOCATE FRAME 10 TO 15 FT FROM CABINET.
2. ROUND OFF SHARP EDGES OF STRUCTURAL TUBING. PAINT CUT ENDS OF FRAMING STRUTS WITH ZINC RICH PAINT.
3. APPLY CORROSION PROTECTION TO PORTION OF STRUT BELOW GRADE.
4. ATTACH TRANSFORMER, DISCONNECT AND LOAD CENTER TO FRAMING STRUT WITH WATERTIGHT GASKETS AND GALVANIZED HARDWARE.
5. REFER TO STANDARD SPECIFICATION 13553 FOR CONDUIT DEPTH.
6. USE ONLY FACTORY PRODUCED CONDUIT SWEEPS.
7. SIZE ENCLOSURE TO ACCOMMODATE CONDUIT SIZES PER PLAN.
8. INSTALL 1 INCH SCHEDULE 80 PVC AS PROTECTION FOR GROUNDING ELECTRODE CONDUCTOR.
9. ALL MATERIALS USED MUST BE RATED FOR THE VOLTAGE AND CURRENT AS SHOWN.
10. INSTALL 2 EACH 10 FT X 3/4 INCH GROUND RODS DIRECTLY BELOW SUPPORT FRAME, SPACED MINIMUM 6 FT APART AT TRANSFORMER LOCATIONS. INSTALL 6 AWG COPPER GROUNDING ELECTRODE CONDUCTOR BETWEEN GROUND RODS 6 INCHES BELOW GRADE AND BOND TO TRANSFORMER SECONDARY ACCORDING TO NEC ARTICLE 250 REQUIREMENTS.
11. LOCATE TYPE I PC JUNCTION BOX MINIMUM 6 FT AND MAXIMUM 10 FT FROM FRAME.

SUPPLEMENTAL DRAWING

REVISIONS

| NO. | DATE | APPR. | REMARKS |
|---|---|---|---|
| 1 | 08/31/17 | MMA | CORRECTED DIMENSION ERROR, ADDED REFERENCE TO NOTE 11 |

**UTAH DEPARTMENT OF TRANSPORTATION**
STANDARD DRAWINGS FOR ROAD AND BRIDGE CONSTRUCTION
SALT LAKE CITY, UTAH

RECOMMENDED FOR APPROVAL — AUG. 31, 2017 DATE
CHAIRMAN STANDARDS COMMITTEE APPROVED — AUG. 31, 2017 DATE
DEPUTY DIRECTOR

ATMS CABINET DISCONNECT AND TRANSFORMER FRAME
STANDARD DRAWING TITLE

STD. DWG. NO.
AT 9

DGN File:D:\StandardsandSpecsSection\2017Section\All Supp Issues\Issue # 2 08-31-2017\Drawings\AT09.dgn
12-SEP-2017

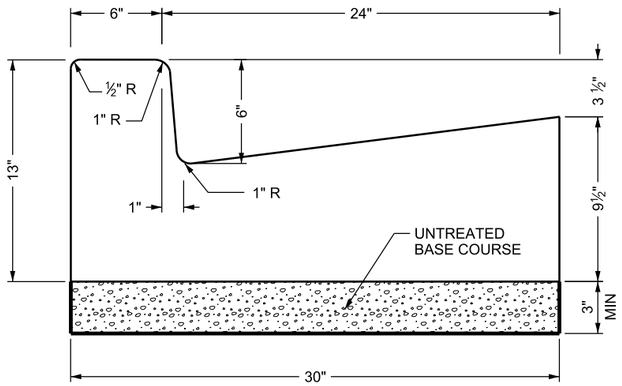


## TYPE B1 CURB & GUTTER

AREA = 1.929 SQ FT

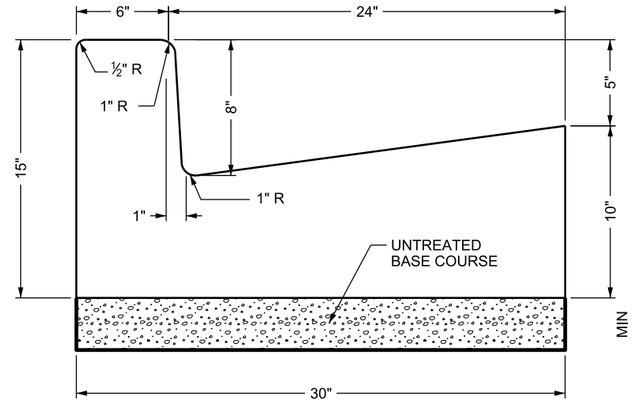


## TYPE B2 CURB & GUTTER

AREA = 2.059 SQ FT

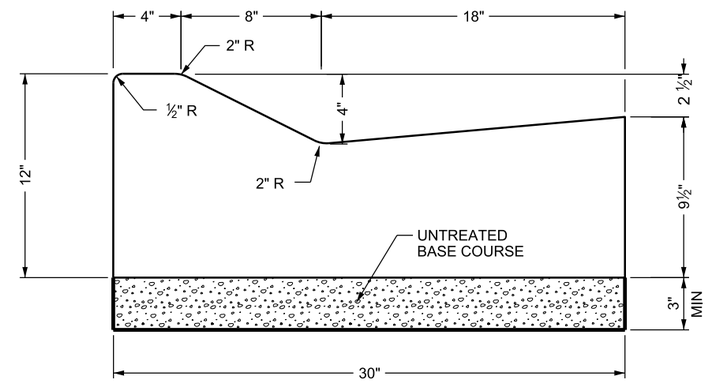


## TYPE M1 CURB & GUTTER

AREA = 1.982 SQ FT

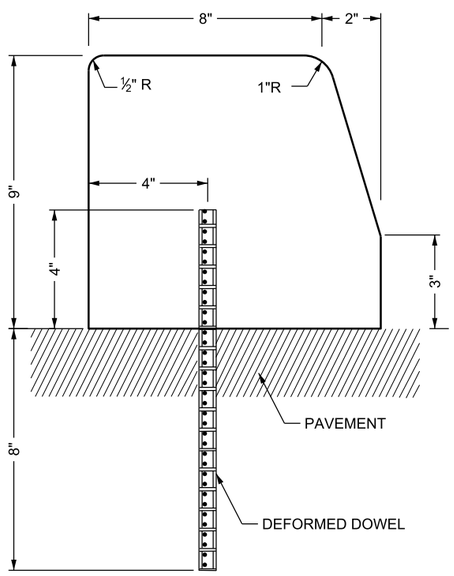


## TYPE B3 CURB

AREA = 0.580 SQ FT

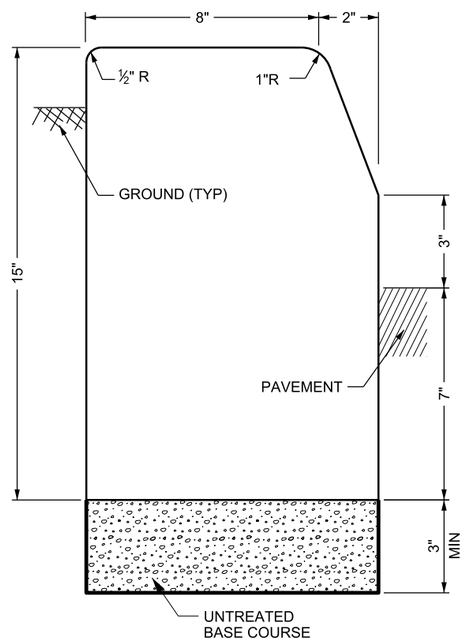


## TYPE B4 CURB

AREA = 1.033 SQ FT

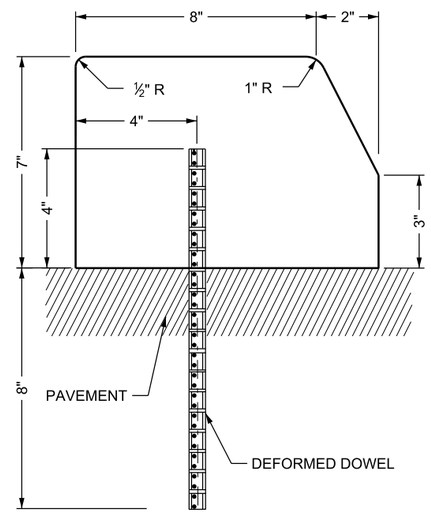


## TYPE B5 CURB RAISED MEDIAN

AREA = 0.490 SQ FT

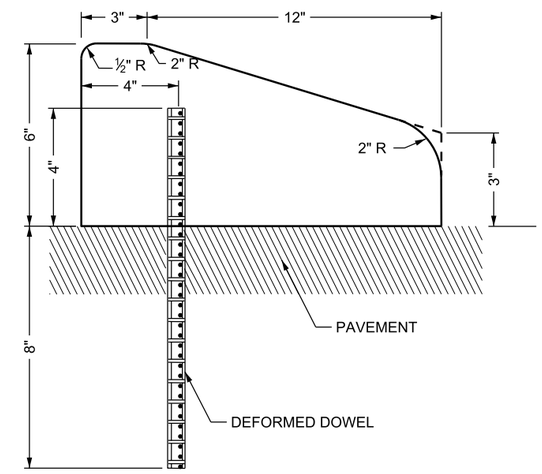


## TYPE M2 CURB

AREA = 0.484 SQ FT

**NOTES:**

1. USE ¾ INCH DEFORMED DOWELS ON 5 FT MAXIMUM CENTERS.
2. PRECAST CURBS:
   A. MINIMUM OF 10 FT IN LENGTH.
   B. DOWELS AT A MINIMUM OF 3 PER 10 FT LENGTH.
   C. INCLUDE ADEQUATE REINFORCING STEEL TO WITHSTAND HANDLING STRESSES.
3. MEASURE CURB HEIGHT VERTICALLY FROM THE FLOW LINE OF THE GUTTER TO TOP BACK OF CURB.
4. REFER TO STD DWG GW 2B FOR CURB AND GUTTER AT ADA ACCESSES.

**DESIGN-ONLY NOTES:**

A. DRAINAGE CURBS: TYPE B1, B2 & M1.

B. MOUNTABLE CURBS: TYPES M1 & M2. REFER TO THE AASHTO POLICY ON GEOMETRIC DESIGN OF HIGHWAYS AND STREETS FOR APPLICATION.

C. USE CURBS TYPES B1, B2, B3, B4 & B5 WITH DESIGN SPEED UP TO 40 MPH EXCEPT IN PREDOMINATELY URBAN OR RAPIDLY DEVELOPING RURAL AREAS WHERE CURBS MAY BE USED WITH DESIGN SPEEDS UP TO 50 MPH.

D. USE TYPE B4 ONLY AS BORDER CURB.

SUPPLEMENTAL DRAWING

REVISIONS

| NO. | DATE | APPR. | REMARKS |
|---|---|---|---|
| 1 | 8/31/17 | CGW | LEVELED BOTTOM OF CURB AND GUTTER SECTIONS |

**UTAH DEPARTMENT OF TRANSPORTATION**
STANDARD DRAWINGS FOR ROAD AND BRIDGE CONSTRUCTION
SALT LAKE CITY, UTAH

RECOMMENDED FOR APPROVAL — AUG. 31, 2017 DATE
CHAIRMAN STANDARDS COMMITTEE APPROVED — AUG. 31, 2017 DATE
DEPUTY DIRECTOR

STANDARD DRAWING TITLE: CONCRETE CURB AND GUTTER TYPES

STD. DWG. NO. GW 2A

DGN File:Q:\StandardsandSpecsSection\2017Section\All Supp Issues\Issue # 2 08-31-2017\Drawings\GW02A.dgn
12-SEP-2017

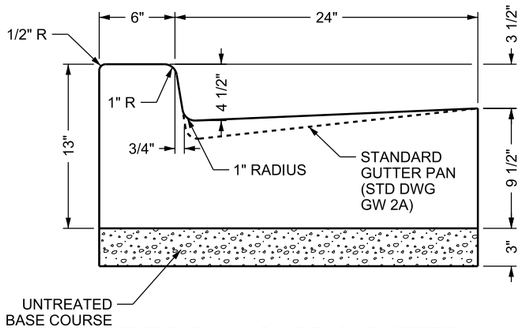


## TYPE B1-A CURB & GUTTER

GUTTER PAN SLOPE REDUCED FOR ADA ACCESS
AREA = 2.050 SQ FT

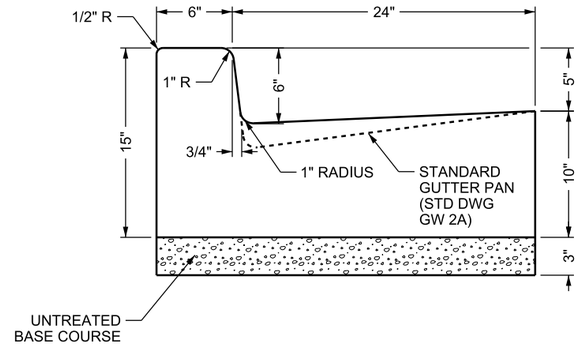


## TYPE B2-A CURB & GUTTER

GUTTER PAN SLOPE REDUCED FOR ADA ACCESS
AREA = 2.221 SQ FT

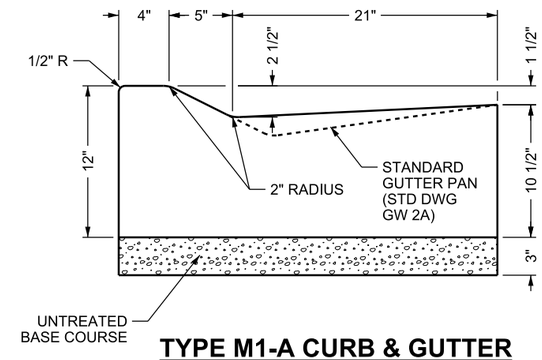


## TYPE M1-A CURB & GUTTER

GUTTER PAN SLOPE REDUCED FOR ADA ACCESS
AREA = 2.164 SQ FT

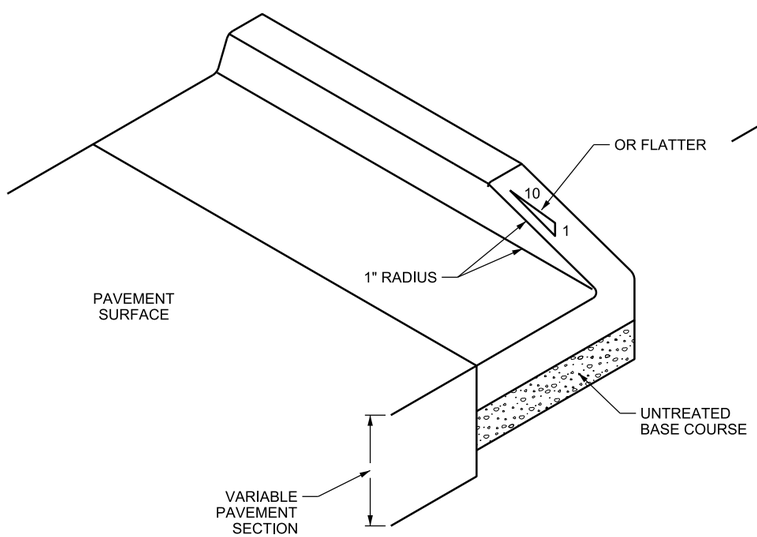


## TYPICAL CURB & GUTTER END DETAIL

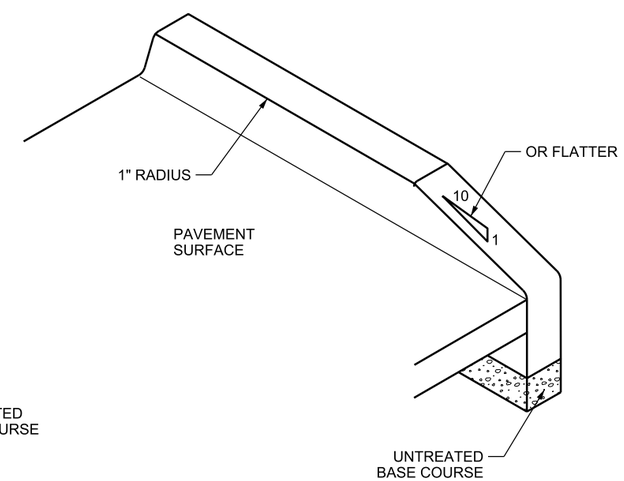


## TYPICAL CURB END DETAIL

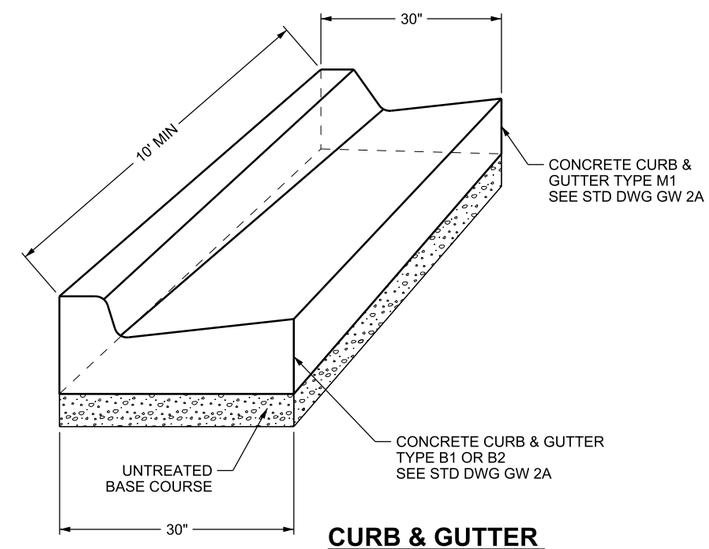


## CURB & GUTTER TRANSITION DETAIL

**NOTE:**

1. FLATTEN GUTTERS AS SHOWN AT ADA ACCESS LOCATIONS. FLATTEN GUTTER BETWEEN ACCESSES AS WELL AS AT CURB ACCESSES WHERE MORE THAN ONE ACCESS WILL BE CONSTRUCTED AT A CORNER.

SUPPLEMENTAL DRAWING

REVISIONS

| NO. | DATE | APPR. | REMARKS |
|---|---|---|---|
| 1 | 8/31/17 | CGW | LEVELED BOTTOM OF CURB AND GUTTER SECTIONS |

**UTAH DEPARTMENT OF TRANSPORTATION**
STANDARD DRAWINGS FOR ROAD AND BRIDGE CONSTRUCTION
SALT LAKE CITY, UTAH

RECOMMENDED FOR APPROVAL — AUG. 31, 2017 DATE
CHAIRMAN STANDARDS COMMITTEE APPROVED — AUG. 31, 2017 DATE
DEPUTY DIRECTOR

CONCRETE CURB AND GUTTER DETAILS

STANDARD DRAWING TITLE

STD. DWG. NO.
GW 2B

DGN File: O:\StandardsandSpecsSection\2017Section\All Supp Issues\Issue # 2 08-31-2017\Drawings\GW02B.dgn
12-SEP-2017

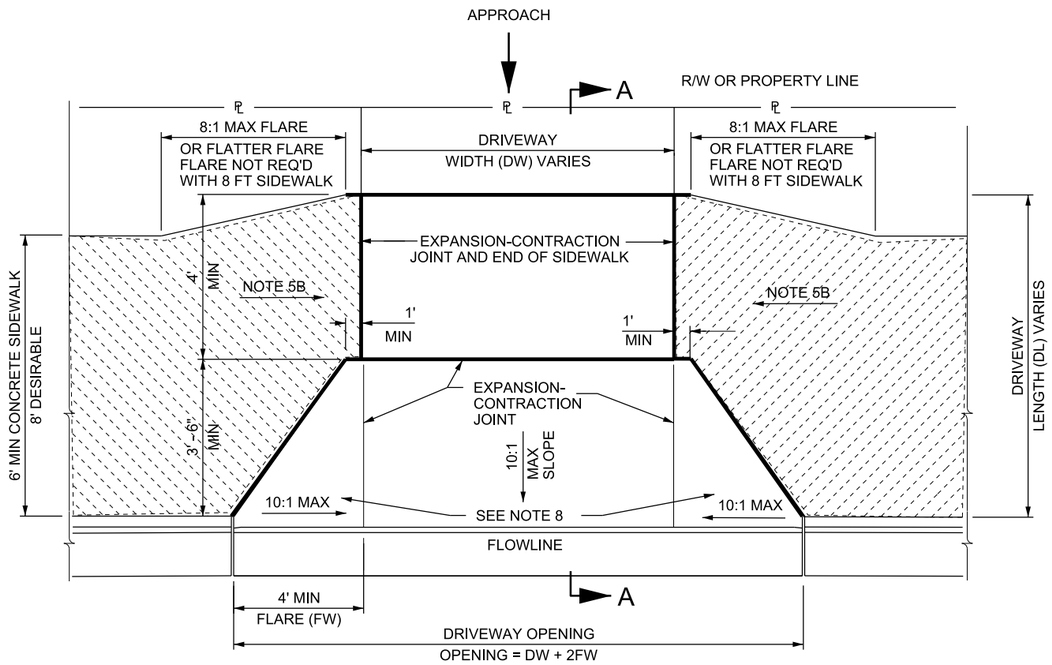


## FLARED DRIVEWAY WITH ADJACENT SIDEWALK

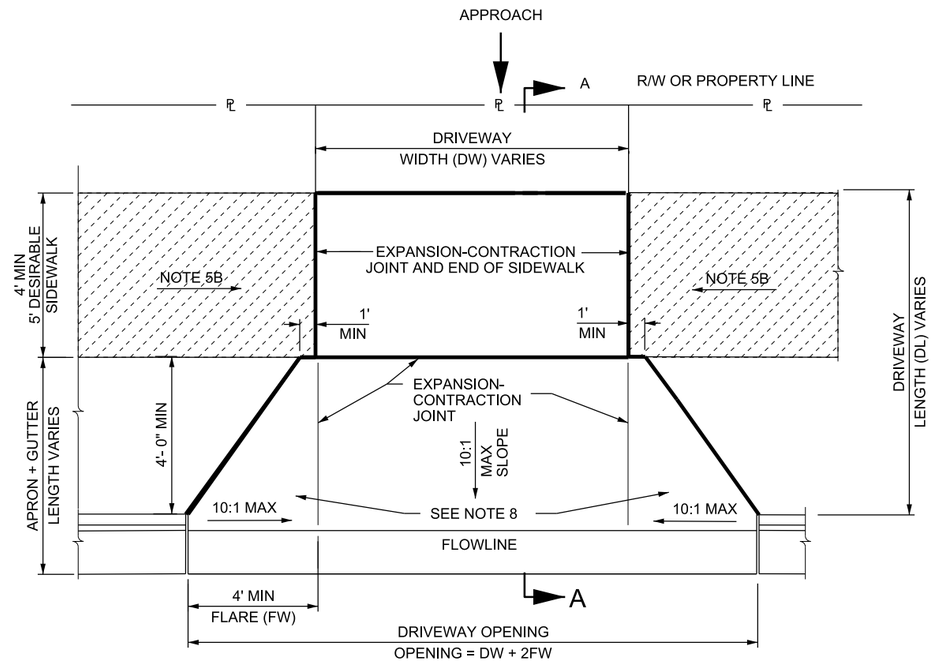


## FLARED DRIVEWAY WITH PARKSTRIP

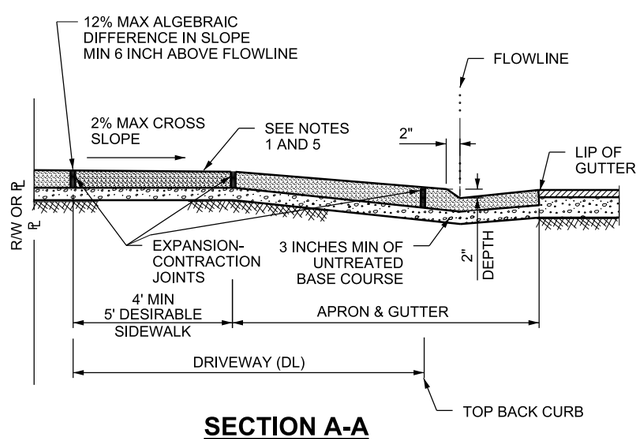


## SECTION A-A

| DRIVEWAY FLARE AREA CHART | |
|---|---|
| FLARED DRIVEWAY | |
| DISTANCE FROM BACK OF CURB TO SIDEWALK | FLARE AREA |
| | |
| 3 FT | 18 $ft^2$ |
| 4 FT | 24 $ft^2$ |
| 6 FT | 36 $ft^2$ |
| 8 FT | 48 $ft^2$ |
| 10 FT | 60 $ft^2$ |
| | |
| ADD (DL)(DW) FOR | |
| TOTAL QUANTITY | |
| QUANTITY CALCULATED USING A 6 INCH CURB | |

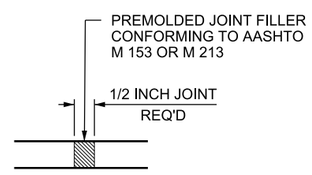


## EXPANSION-CONTRACTION JOINT DETAIL

**NOTES:**

1. SIDEWALK CROSS SLOPE DIMENSIONS SHOWN ARE NOT SUBJECT TO CONVENTIONAL INDUSTRY TOLERANCES. CONSTRUCT SIDEWALKS AND RAMPS SUCH THAT THE MAXIMUM OR MINIMUM VALUES ARE NOT EXCEEDED. WORK THAT EXCEEDS THOSE VALUES WILL NOT BE ACCEPTED.
2. MAXIMUM DISTANCE BETWEEN CONTROL JOINTS 10 FT LATERALLY AND LONGITUDINALLY SPACED EQUALLY.
3. PROVIDE EXPANSION-CONTRACTION JOINTS IN CONCRETE SIDEWALK AT 30 FT INTERVALS AND WHERE CONCRETE SIDEWALK BUTTS AGAINST DRIVEWAY.
4. SIDEWALK INSIDE THE DRIVEWAY LIMITS IS PAID AS PART OF DRIVEWAY, NOT AS PART OF SIDEWALK.
5. FLARED CONCRETE DRIVEWAY
   A. RESIDENTIAL = 6 INCH THICK, COMMERCIAL = 7 INCH THICK. USE THESE THICKNESSES FOR APRON, SIDEWALK WITHIN DRIVEWAY AREA, APPROACH AND FLARE.
   B. DEPRESS THE LONGITUDINAL SLOPE OF THE SIDEWALK AT A MAXIMUM RATE OF 5 PERCENT TO MEET THE APRON - APPROACH ELEVATION IF THE GRADES SHOWN ON THE SLOPE DETAIL CANNOT BE MET. THE TOP BACK OF SIDEWALK IS TO BE A MINIMUM 6 INCHES ABOVE THE FLOWLINE OF CURB AND GUTTER AT ALL TIMES.
6. USE CLASS AA(AE) CONCRETE FOR SIDEWALK AND DRIVEWAYS.
7. USE UNTREATED BASE COURSE UNDER ALL SIDEWALKS AND DRIVEWAYS.
8. QUANTITIES FOR DRIVEWAYS INCLUDE FLARES TO TOP BACK OF CURB. CURB AND GUTTER PAID SEPARATELY THROUGH DRIVEWAY LOCATIONS.
9. REMOVE EXISTING SIDEWALK AND REPLACE BACK TO NEAREST EXPANSION-CONTRACTION JOINT.
10. APPROACH IS FROM EXISTING DRIVEWAY TIE-IN TO TOP-BACK-CURB AND IS PART OF DRIVEWAY QUANTITIES.

**DESIGN-ONLY NOTES:**

A. DRIVEWAY DIMENSIONS (MAX.& MIN.) ARE LOCATED IN UDOT "ADMINISTRATIVE RULE R930-6 ACCOMMODATION OF UTILITIES AND THE CONTROL AND PROTECTION OF STATE HIGHWAY RIGHTS OF WAY."

SUPPLEMENTAL DRAWING

REVISIONS

| NO. | DATE | APPR. | REMARKS |
|---|---|---|---|
| 1 | 8/31/17 | CGW | INCREASED MINIMUM APRON DEPTH TO 3.5 FT |

**UTAH DEPARTMENT OF TRANSPORTATION**
STANDARD DRAWINGS FOR ROAD AND BRIDGE CONSTRUCTION
SALT LAKE CITY, UTAH

RECOMMENDED FOR APPROVAL — AUG. 31, 2017 DATE
CHAIRMAN STANDARDS COMMITTEE APPROVED — AUG. 31, 2017 DATE
DEPUTY DIRECTOR

CONCRETE DRIVEWAYS AND SIDEWALKS
STANDARD DRAWING TITLE

STD. DWG. NO.
GW 3A

DGN File:Q:\StandardsandSpecs\Section\2017Section\All Supp Issues\Issue # 2 08-31-2017\Drawings\GW03A.dgn
12-SEP-2017

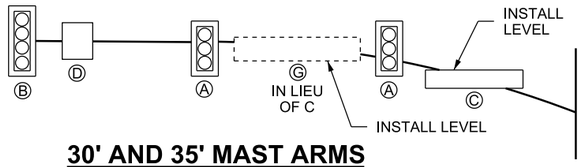


**30' AND 35' MAST ARMS MAXIMUM LOADING**
(SEE NOTES 8 AND A)

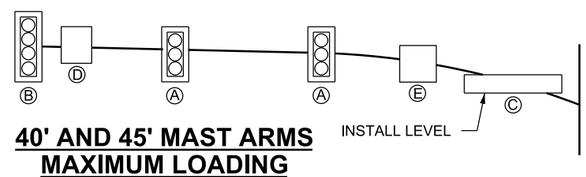


**40' AND 45' MAST ARMS MAXIMUM LOADING**
(SEE NOTES 8 AND A)

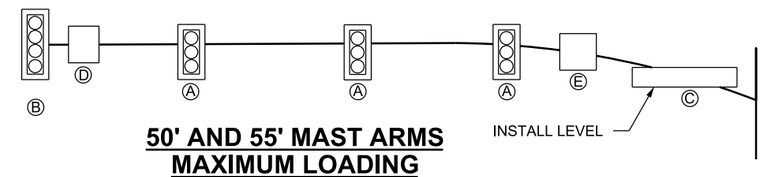


**50' AND 55' MAST ARMS MAXIMUM LOADING**
(SEE NOTES 8 AND A)

FIELD CUT END OF MAST ARM IF 25 FOOT MAST ARM LENGTH IS REQUIRED. INSTALL CUSTOM ARM END CAP.

# TYPICAL SIGNAL HEAD & SIGN PLACEMENT FOR MAXIMUM LOADING

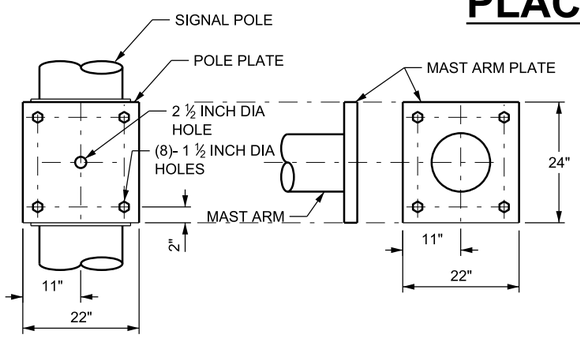


**30' TO 55' MAST ARM AND POLE PLATE DETAIL**

| DEVICE | DESCRIPTION/SIZE | MAXIMUM PROJECTED AREA (SF) | *MAXIMUM WEIGHT (LBS) | MOUNTING (SEE STD DWG SL 3 SERIES) |
|---|---|---|---|---|
| Ⓐ SIGNAL | 12", 3-SECTION WITH BACK PLATE | 8.7 | 55 | BRACKET |
| Ⓑ SIGNAL | 12", 4-SECTION WITH BACK PLATE | 11.1 | 72 | BRACKET |
| Ⓖ SIGN | STREET SIGN 18" x 96", OR 30" X 60" | 12.5 | 24 | OPTION A |
| Ⓒ SIGN | STREET SIGN 24" x 120", (MAX) OR | 20.0 | 38 | OPTION B |
| | 18" X 96", OR 30" x 60" | 12.5 | 24 | |
| Ⓓ SIGN | SIGN 30" x 36" (MAX) | 7.5 | 15 | OPTION A |
| Ⓔ SIGN | BLANKOUT SIGN 36" x 36" (MAX) | 9.0 | 80 | BRACKET |

* DOES NOT ACCOUNT FOR PROGRAMMABLE HEADS. SEE NOTE A.

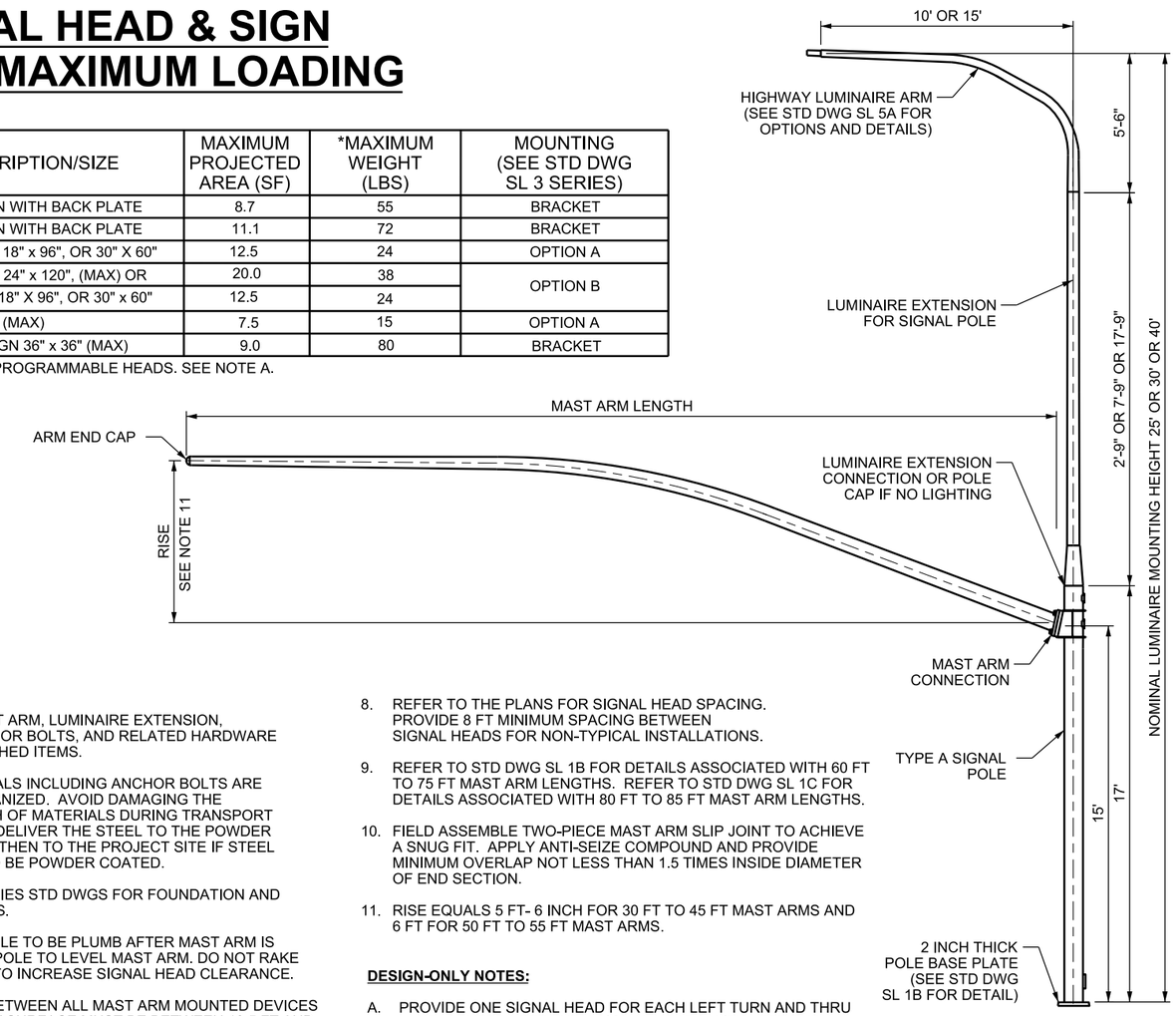


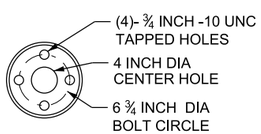


**SECTION A-A**

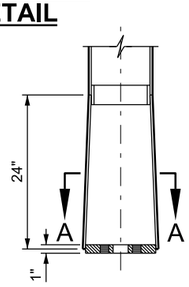


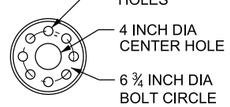


**SECTION B-B**

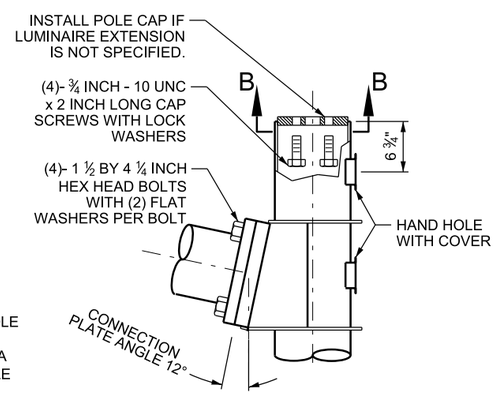


**30' TO 55' MAST ARM POLE EXTENSION AND CONNECTION DETAIL**

**GENERAL NOTES:**

1. SIGNAL POLE, MAST ARM, LUMINAIRE EXTENSION, FOUNDATION ANCHOR BOLTS, AND RELATED HARDWARE ARE STATE FURNISHED ITEMS.
2. ALL STEEL MATERIALS INCLUDING ANCHOR BOLTS ARE HOT-DIPPED GALVANIZED. AVOID DAMAGING THE GALVANIZED FINISH OF MATERIALS DURING TRANSPORT AND PLACEMENT. DELIVER THE STEEL TO THE POWDER COATING FACILITY THEN TO THE PROJECT SITE IF STEEL MATERIALS ARE TO BE POWDER COATED.
3. REFER TO SL 2 SERIES STD DWGS FOR FOUNDATION AND POLE BASE DETAILS.
4. INSTALL SIGNAL POLE TO BE PLUMB AFTER MAST ARM IS ATTACHED. RAKE POLE TO LEVEL MAST ARM. DO NOT RAKE THE SIGNAL POLE TO INCREASE SIGNAL HEAD CLEARANCE.
5. THE CLEARANCE BETWEEN ALL MAST ARM MOUNTED DEVICES AND THE ROADWAY SURFACE MUST BE BETWEEN 18.5 FT AND 21 FT. A 17.5 FT CLEARANCE IS ALLOWED WITH APPROVAL FROM THE REGION TRAFFIC OPERATIONS ENGINEER.
6. MOUNT ALL SIGNAL HEAD ASSEMBLIES AT THE SAME BOTTOM ELEVATION +/- 2 INCHES FOR EACH MAST ARM.
7. PROVIDE SIGNAL HEAD BRACKET MOUNT FOR ATTACHING SIGNAL HEADS AND SIGNS TO MAST ARM. SEE SL 3 SERIES STD DWGS FOR DETAILS.
8. REFER TO THE PLANS FOR SIGNAL HEAD SPACING. PROVIDE 8 FT MINIMUM SPACING BETWEEN SIGNAL HEADS FOR NON-TYPICAL INSTALLATIONS.
9. REFER TO STD DWG SL 1B FOR DETAILS ASSOCIATED WITH 60 FT TO 75 FT MAST ARM LENGTHS. REFER TO STD DWG SL 1C FOR DETAILS ASSOCIATED WITH 80 FT TO 85 FT MAST ARM LENGTHS.
10. FIELD ASSEMBLE TWO-PIECE MAST ARM SLIP JOINT TO ACHIEVE A SNUG FIT. APPLY ANTI-SEIZE COMPOUND AND PROVIDE MINIMUM OVERLAP NOT LESS THAN 1.5 TIMES INSIDE DIAMETER OF END SECTION.
11. RISE EQUALS 5 FT- 6 INCH FOR 30 FT TO 45 FT MAST ARMS AND 6 FT FOR 50 FT TO 55 FT MAST ARMS.

**DESIGN-ONLY NOTES:**

A. PROVIDE ONE SIGNAL HEAD FOR EACH LEFT TURN AND THRU LANE. CENTER LEFT TURN SIGNAL HEADS WITH LEFT TURN APPROACH LANES AND CENTER THRU SIGNAL HEADS WITH THRU ACCEPTANCE LANES WHERE POSSIBLE. PROVIDE TWO THRU HEADS SPACED AT 8 FT TO 10 FT FOR ONE THRU LANE ROADWAYS. CONTACT THE ENGINEER FOR LOADING APPROVAL IF MAST ARM LOADING EXCEEDS LOADING SHOWN OR IF USING PROGRAMMABLE SIGNAL HEADS.

SUPPLEMENTAL DRAWING

REVISIONS

| NO. | DATE | APPR. | REMARKS |
|---|---|---|---|
| 1 | 8/31/17 | JS | UPDATED NOTES AND TABLE. |

UTAH DEPARTMENT OF TRANSPORTATION
STANDARD DRAWINGS FOR ROAD AND BRIDGE CONSTRUCTION
SALT LAKE CITY, UTAH

RECOMMENDED FOR APPROVAL — AUG. 31, 2017 DATE
CHAIRMAN STANDARDS COMMITTEE APPROVED — AUG. 31, 2017 DATE
DEPUTY DIRECTOR

STANDARD DRAWING TITLE
TRAFFIC SIGNAL MAST ARM POLE AND LUMINAIRE EXTENSION 30 FT THROUGH 55 FT

STD. DWG. NO.
SL 1A

DGN File: D:\StandardsandSpecs\Section\2017Section\All Supp Issues\Issue # 2 08-31-2017\Drawings\SL01A.dgn
12-SEP-2017

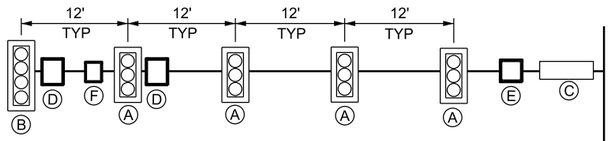


**60' AND 65' MAST ARMS MAXIMUM LOADING**

(SEE STD DWG SL 1A, NOTES 8 AND A)

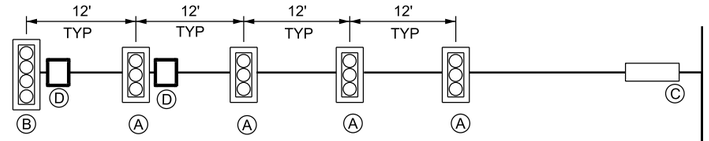


**70' AND 75' MAST ARMS MAXIMUM LOADING**

(SEE STD DWG SL 1A, NOTES 8 AND A)

# TYPICAL SIGNAL HEAD & SIGN PLACEMENT FOR MAXIMUM LOADING

| DEVICE | DESCRIPTION/SIZE | MAXIMUM PROJECTED AREA (SF) | *MAXIMUM WEIGHT (LBS) | MOUNTING (SEE STD DWG SL 3 SERIES) |
|---|---|---|---|---|
| Ⓐ SIGNAL | 12", 3-SECTION WITH BACK PLATE | 8.7 | 55 | BRACKET |
| Ⓑ SIGNAL | 12", 4-SECTION WITH BACK PLATE | 11.1 | 72 | BRACKET |
| Ⓒ SIGN | STREET SIGN 18" x 96", OR | 12.0 | 23 | OPTION A |
| | 24" x 120", (MAX) OR | 20.0 | 38 | OPTION B |
| | 30" x 60" | 12.5 | 24 | OPTION A |
| Ⓓ SIGN | SIGN 30" x 36" (MAX) | 7.5 | 15 | OPTION A |
| Ⓔ SIGN | BLANKOUT SIGN 36" x 36" (MAX) | 9.0 | 80 | BRACKET |
| Ⓕ SIGN | SIGN 24" x 24" | 4.0 | 8 | OPTION A |

*DOES NOT ACCOUNT FOR PROGRAMMABLE HEADS. SEE STD DWG SL 1A, NOTE A.

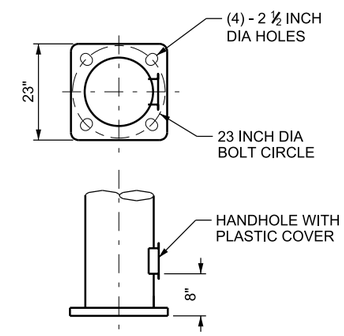


**TYPICAL BASE PLATE DETAIL**

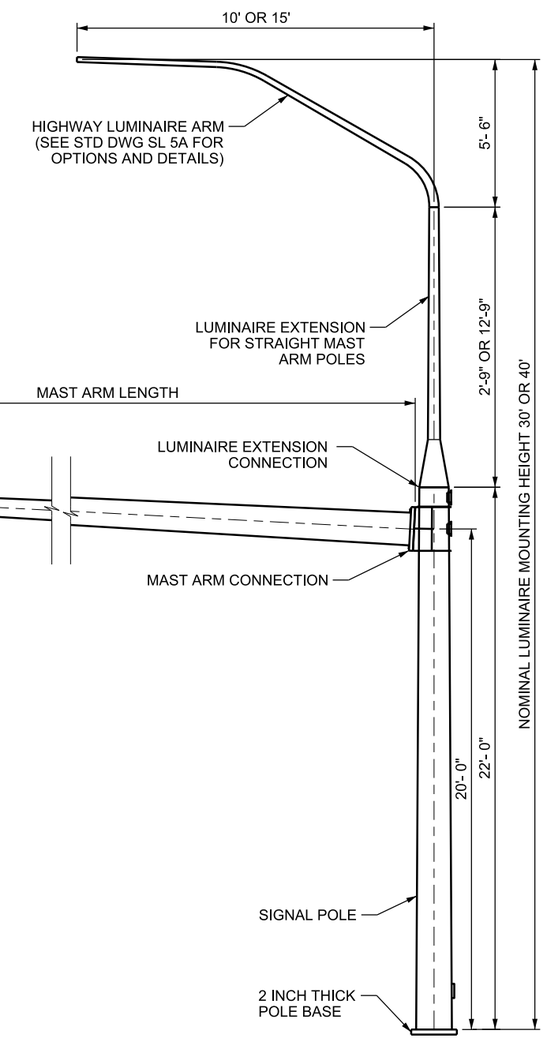


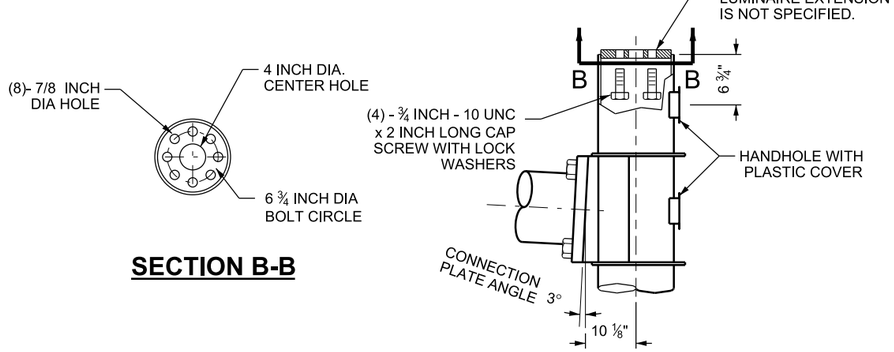


**SECTION B-B**

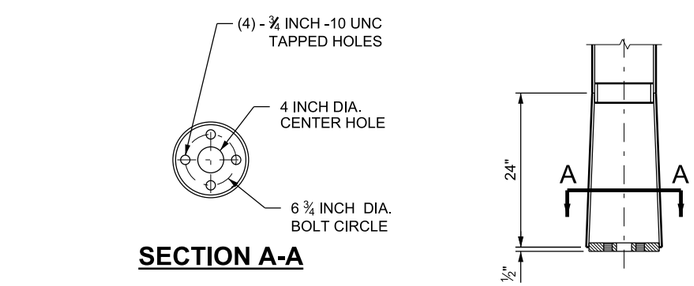


**SECTION A-A**

**60' THRU 75' MAST ARM POLE EXTENSION AND CONNECTION DETAIL**

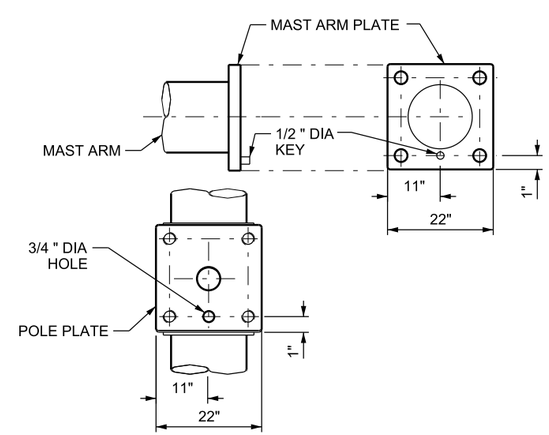


**60' THRU 75' MAST ARM AND POLE KEY DETAIL**

**NOTE:**

1. SEE STD DWG SL 1A FOR SIGNAL POLE AND MAST ARM GENERAL NOTES.

SUPPLEMENTAL DRAWING

REVISIONS

| NO. | DATE | APPR. | REMARKS |
|---|---|---|---|
| 1 | 8/31/17 | JS | UPDATED TABLE. REVISED CALLOUTS. |

**UTAH DEPARTMENT OF TRANSPORTATION**

STANDARD DRAWINGS FOR ROAD AND BRIDGE CONSTRUCTION

SALT LAKE CITY, UTAH

RECOMMENDED FOR APPROVAL — DATE AUG. 31, 2017

CHAIRMAN STANDARDS COMMITTEE APPROVED — DATE AUG. 31, 2017

DEPUTY DIRECTOR

STANDARD DRAWING TITLE

TRAFFIC SIGNAL MAST ARM POLE AND LUMINAIRE EXTENSION 60 FT THROUGH 75 FT

STD. DWG. NO.

SL 1B

DGN File: G:\StandardsandSpecs\Section\2017Section\All Supp Issues\Issue # 2 08-31-2017\Drawings\SL01B.dgn
12-SEP-2017

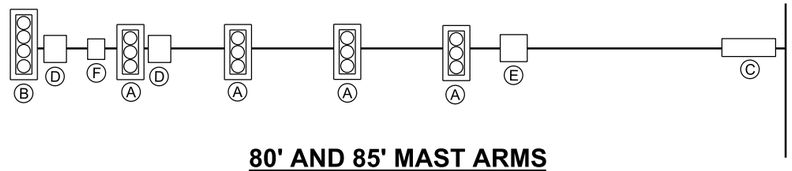


**80' AND 85' MAST ARMS MAXIMUM LOADING**

(SEE STD DWG SL 1A, NOTES 8 AND A)

# TYPICAL SIGNAL HEAD & SIGN PLACEMENT FOR MAXIMUM LOADING

| DEVICE | DESCRIPTION/SIZE | MAXIMUM PROJECTED AREA (SF) | *MAXIMUM WEIGHT (LBS) | MOUNTING (SEE STD DWG SL 3 SERIES) |
|---|---|---|---|---|
| Ⓐ SIGNAL | 12", 3-SECTION WITH BACK PLATE | 8.7 | 55 | BRACKET |
| Ⓑ SIGNAL | 12", 4-SECTION WITH BACK PLATE | 11.1 | 72 | BRACKET |
| Ⓒ SIGN | STREET SIGN 18" x 96", OR | 12.0 | 23 | OPTION A |
| | 24" x 120", (MAX) OR | 20.0 | 38 | OPTION B |
| | 30" x 60" | 12.5 | 24 | OPTION A |
| Ⓓ SIGN | SIGN 30" x 36" (MAX) | 7.5 | 15 | OPTION A |
| Ⓔ SIGN | BLANKOUT SIGN 36" x 36" (MAX) | 9.0 | 80 | BRACKET |
| Ⓕ SIGN | SIGN 24" x 24" | 4.0 | 8 | OPTION A |

*DOES NOT ACCOUNT FOR PROGRAMMABLE HEADS. SEE STD DWG SL 1A, NOTE A.

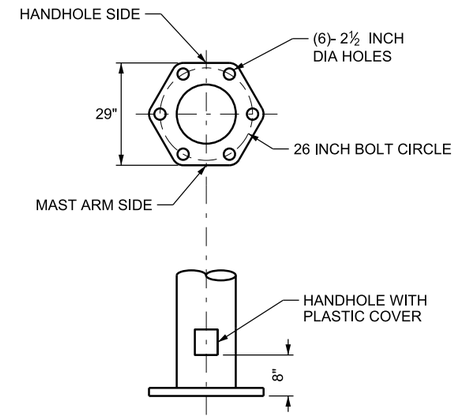


**BASE PLATE DETAIL**

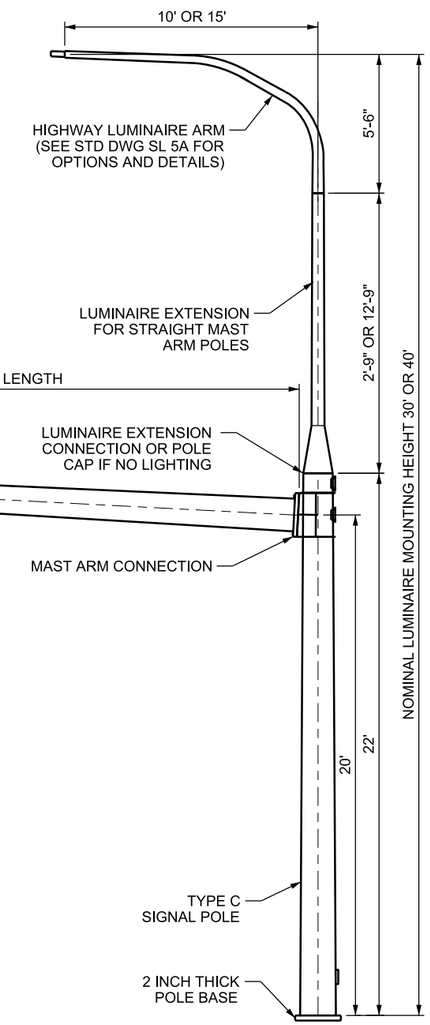


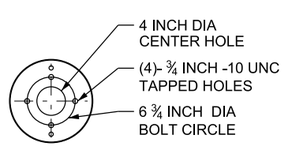


**SECTION A-A**

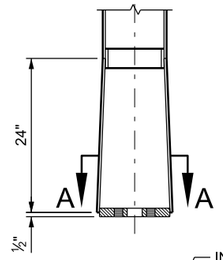


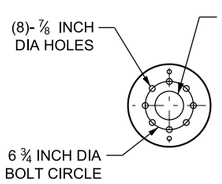


**SECTION B-B**

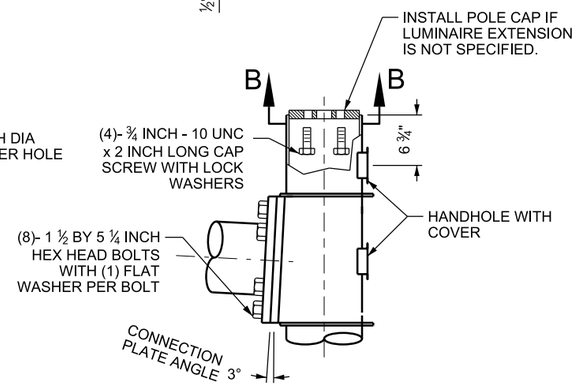


**80' TO 85' MAST ARM POLE EXTENSION AND CONNECTION DETAIL**

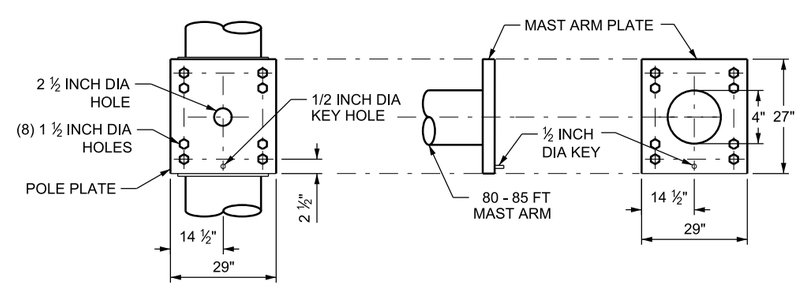


**80' TO 85' MAST ARM AND POLE PLATE DETAIL**

**NOTE:**

1. SEE STD DWG SL 1A FOR SIGNAL POLE AND MAST ARM GENERAL NOTES.

SUPPLEMENTAL DRAWING

REVISIONS

| NO. | DATE | APPR. | REMARKS |
|---|---|---|---|
| 1 | 8/31/17 | JS | UPDATED DETAIL, CALLOUTS, AND TABLE. |

**UTAH DEPARTMENT OF TRANSPORTATION**

STANDARD DRAWINGS FOR ROAD AND BRIDGE CONSTRUCTION

SALT LAKE CITY, UTAH

RECOMMENDED FOR APPROVAL — AUG. 31, 2017 DATE

CHAIRMAN STANDARDS COMMITTEE APPROVED — AUG. 31, 2017 DATE

DEPUTY DIRECTOR

TRAFFIC SIGNAL MAST ARM POLE AND LUMINAIRE EXTENSION 80 FT THROUGH 85 FT

STANDARD DRAWING TITLE

STD. DWG. NO.

SL 1C

DGN File: G:\Standards and Specs\Section\2017Section\All Supp Issues\Issue # 2 08-31-2017\Drawings\SL01C.dgn
12-SEP-2017

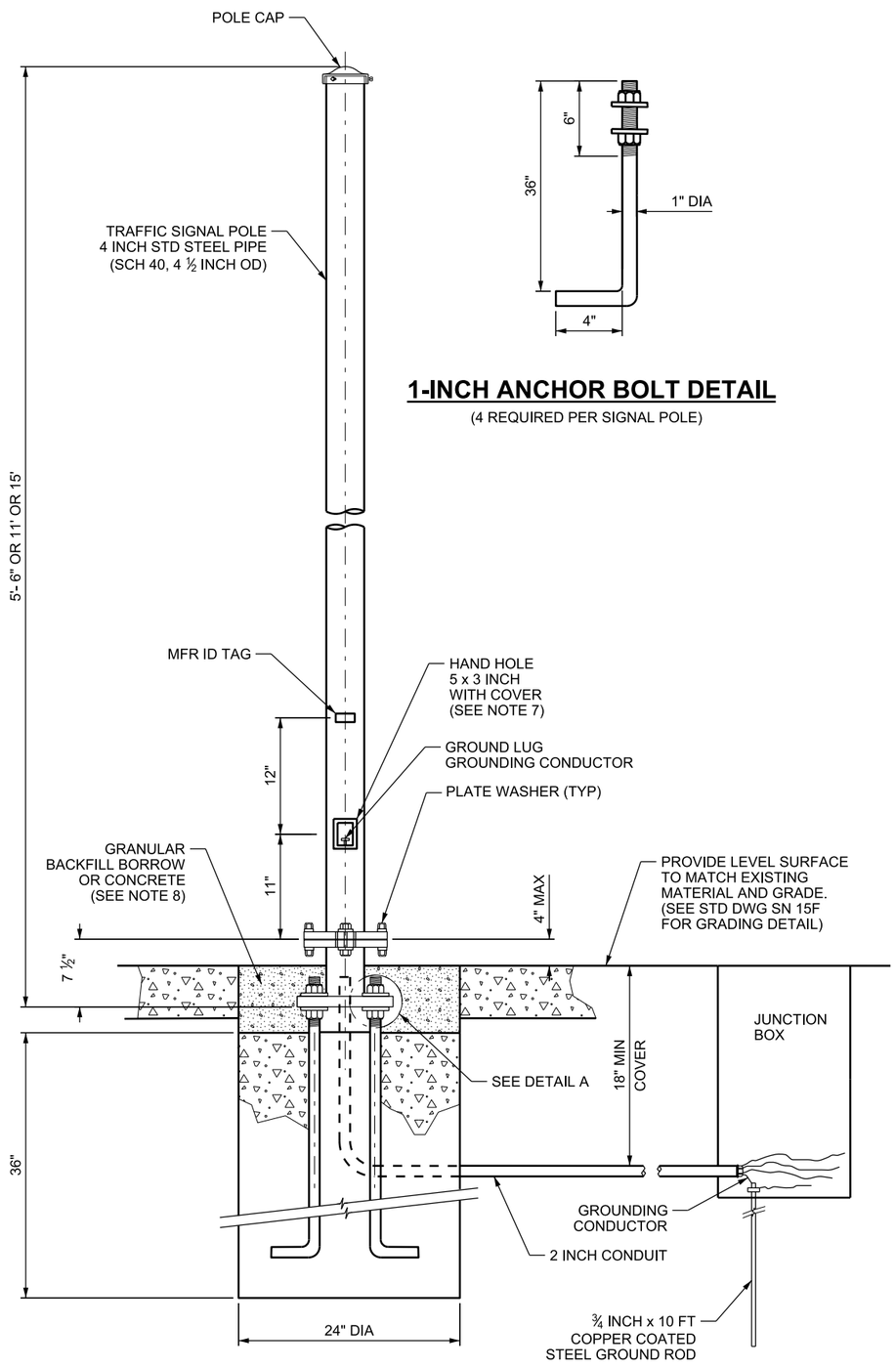





## 1-INCH ANCHOR BOLT DETAIL

(4 REQUIRED PER SIGNAL POLE)

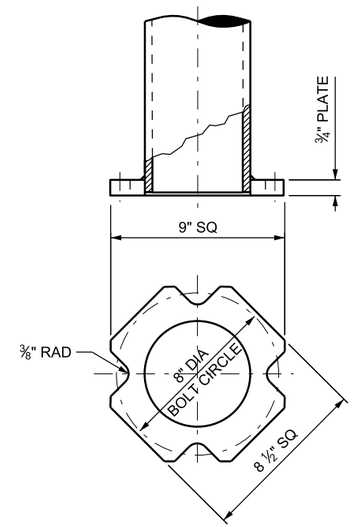


## POLE BASE

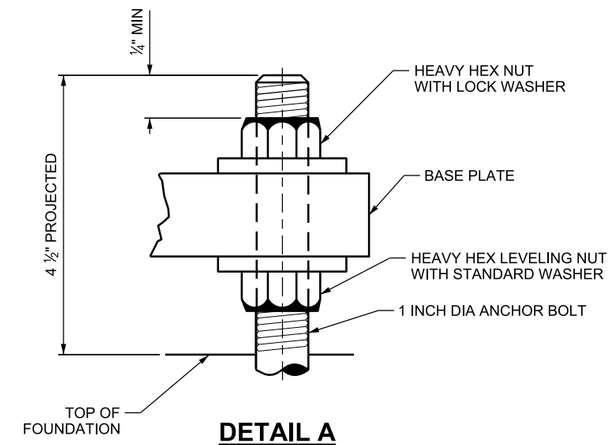


## DETAIL A

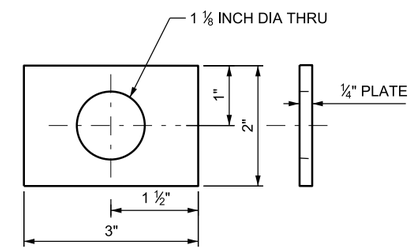


## PLATE WASHER

FOR SLIP BASE BOLTS
(2 REQUIRED EACH BOLT)

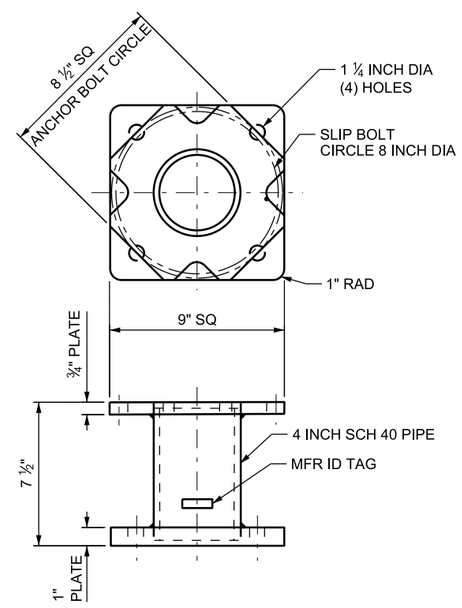


## GROUND BASE

**NOTES:**

1. TRAFFIC SIGNAL POLE, SLIP BASE, FOUNDATION ANCHOR BOLTS, AND RELATED HARDWARE ARE STATE FURNISHED ITEMS.
2. ALL STEEL MATERIALS INCLUDING ANCHOR BOLTS ARE HOT-DIPPED GALVANIZED. AVOID DAMAGING THE GALVANIZED FINISH OF MATERIALS DURING TRANSPORT AND PLACEMENT.
3. USE CLASS AA(AE) CAST-IN-PLACE CONCRETE FOR FOUNDATION. CAP CONDUIT ON BOTH ENDS PRIOR TO PLACING CONCRETE.
4. USE STATE FURNISHED ⅝ x 3 INCH SLIP BOLTS. TORQUE EACH BOLT TO 80 FT-LBS. RELEASE AND RE-TORQUE TO 70 FT-LBS.
5. SEE STD DWG SN 15F FOR BREAKAWAY SUPPORT STUB HEIGHT MEASUREMENT.
6. REFER TO STD DWG SL 3B AND SL 6A FOR SIGNAL AND PEDESTRIAN HEAD DETAILS.
7. ORIENT SIGNAL POLE SUCH THAT A TECHNICIAN FACING THE HAND HOLE WILL FACE THE ROADWAY OR ONCOMING TRAFFIC.
8. MATCH EXISTING SURFACE IF SURROUNDING MATERIAL IS NOT CONCRETE. USE GRANULAR BACKFILL BORROW, IF FOUNDATION IS NOT SURROUNDED BY SURFACE TREATMENT, FROM TOP OF FOUNDATION TO FINISHED GRADE.

SUPPLEMENTAL DRAWING

REVISIONS

| NO. | DATE | APPR. | REMARKS |
|---|---|---|---|
| 1 | 8/31/17 | JS | REVISED DETAIL, CALLOUTS AND NOTES. |

**UTAH DEPARTMENT OF TRANSPORTATION**
STANDARD DRAWINGS FOR ROAD AND BRIDGE CONSTRUCTION
SALT LAKE CITY, UTAH

RECOMMENDED FOR APPROVAL — DATE AUG. 31, 2017
CHAIRMAN STANDARDS COMMITTEE APPROVED — DATE AUG. 31, 2017
DEPUTY DIRECTOR

STANDARD DRAWING TITLE
TRAFFIC SIGNAL POLE

STD. DWG. NO.
SL 1E

DGN File: D:\StandardsandSpecs\Section\2017Section\All Supp Issues\Issue # 2 08-31-2017\Drawings\SL01E.dgn
12-SEP-2017

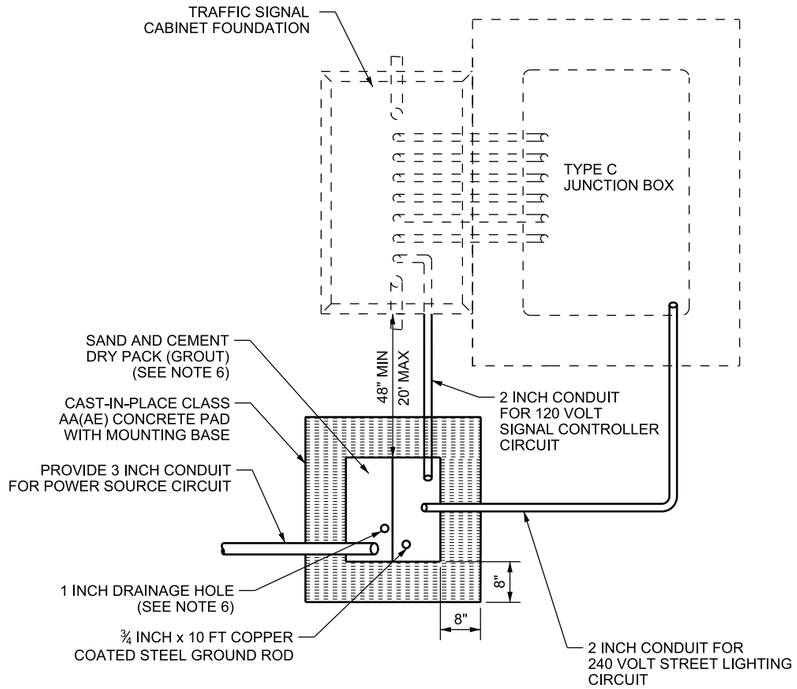


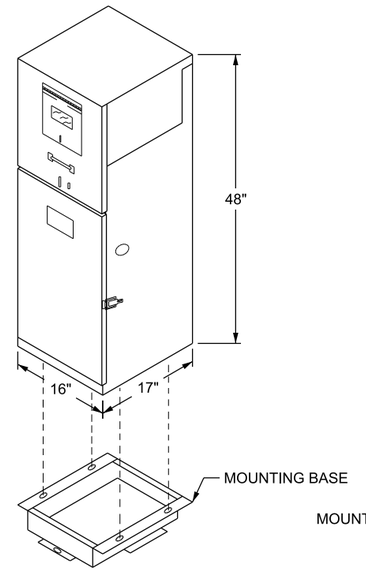


## SINGLE METER UNDERGROUND SERVICE PEDESTAL

(ACTUAL DIMENSIONS MAY VARY,
DIMENSIONS FOR INFORMATION ONLY)

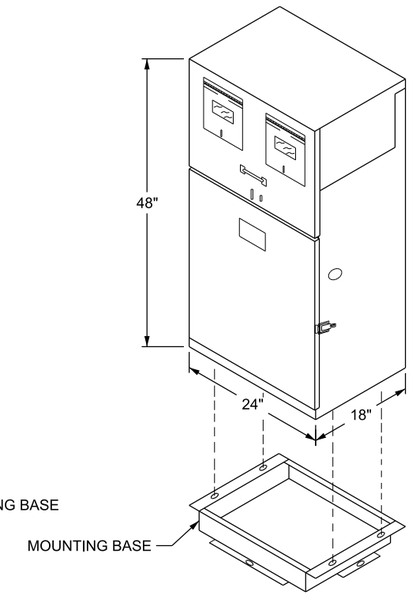


## DUAL METER UNDERGROUND SERVICE PEDESTAL

(ACTUAL DIMENSIONS MAY VARY,
DIMENSIONS FOR INFORMATION ONLY)

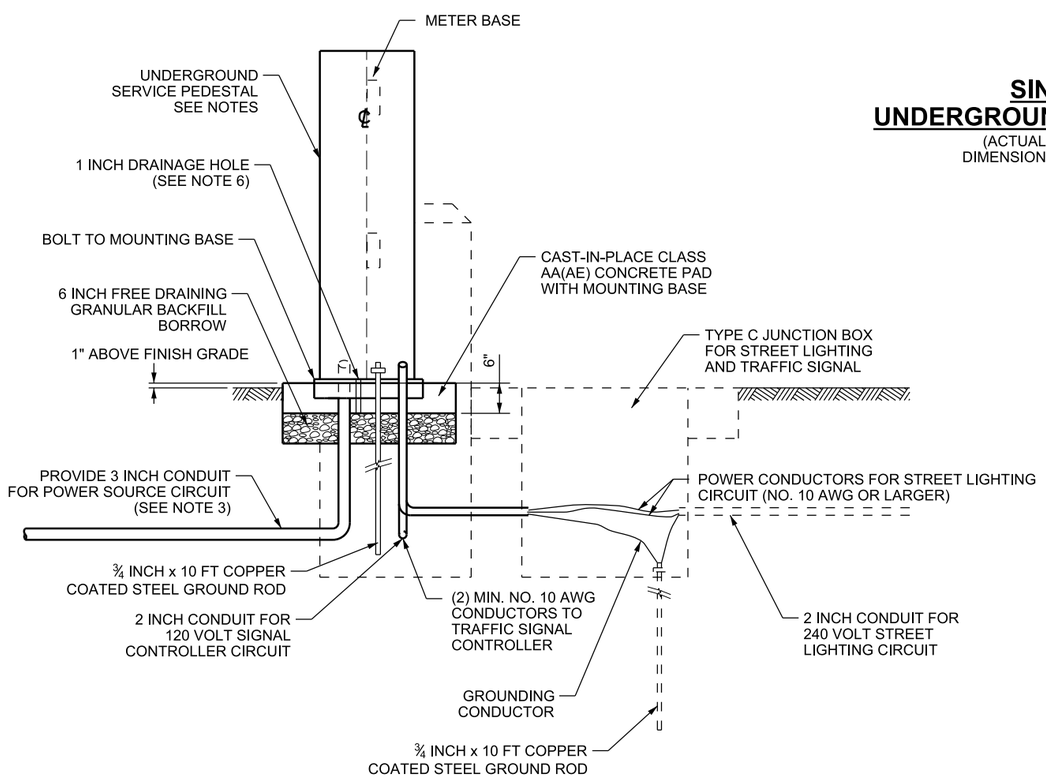


**NOTES:**

1. LOCATE SERVICE PEDESTAL ON EITHER SIDE OF TRAFFIC SIGNAL CABINET FOUNDATION AS SHOWN. LOCATION MAY BE MODIFIED TO BEST SUIT FIELD CONDITIONS WITH ENGINEER'S APPROVAL. MAINTAIN 48 INCH MINIMUM CLEARANCE AROUND EACH UNIT WITH DOORS OPENED TO ANY POSITION. PLACE UNDERGROUND SERVICE PEDESTAL WITHIN 20 FT OF CABINET.
2. LOCATE SERVICE PEDESTAL AND CONTROLLER SO WATER DRAINS AWAY FROM FOUNDATIONS AND JUNCTION BOXES. SITE PREPARATION, INCLUDING GRADING, MAY BE REQUIRED BEFORE PLACING EQUIPMENT.
3. PROVIDE SINGLE-PHASE, 3-WIRE, 100A SERVICE. COORDINATE WITH LOCAL UTILITIES REGARDING SERVICE CONDUCTORS.
4. PROVIDE UNDERGROUND SERVICE PEDESTAL PER STANDARD SPECIFICATION 16530 AND AS SPECIFIED IN THE CONTRACT DOCUMENTS.
5. SEE STD DWG SL 4D FOR JUNCTION BOX DETAILS.
6. INSTALL SAND AND CEMENT DRY PACK (GROUT) WITHIN MOUNTING BASE AFTER INSTALLATION OF CONDUITS AND GROUND ROD. PROVIDE 1-INCH DRAINAGE HOLE AT LOW POINT TO ALLOW DRAINAGE FROM TOP OF GROUT.
7. CAST PEDESTAL MOUNTING BASE INTO CONCRETE PEDESTAL PAD.

SUPPLEMENTAL DRAWING

REVISIONS

| NO. | DATE | APPR. | REMARKS |
|---|---|---|---|
| 1 | 8/31/17 | JS | REVISED CALLOUTS AND NOTES. |

**UTAH DEPARTMENT OF TRANSPORTATION**
STANDARD DRAWINGS FOR ROAD AND BRIDGE CONSTRUCTION
SALT LAKE CITY, UTAH

RECOMMENDED FOR APPROVAL — AUG. 31, 2017 DATE
CHAIRMAN STANDARDS COMMITTEE APPROVED — AUG. 31, 2017 DATE
DEPUTY DIRECTOR

UNDERGROUND SERVICE PEDESTALS
STANDARD DRAWING TITLE

STD. DWG. NO.
SL 4C

DGN File:Q:\StandardsandSpecsSection\2017Section\All Supp Issues\Issue # 2 08-31-2017\Drawings\SL04C.dgn
12-SEP-2017

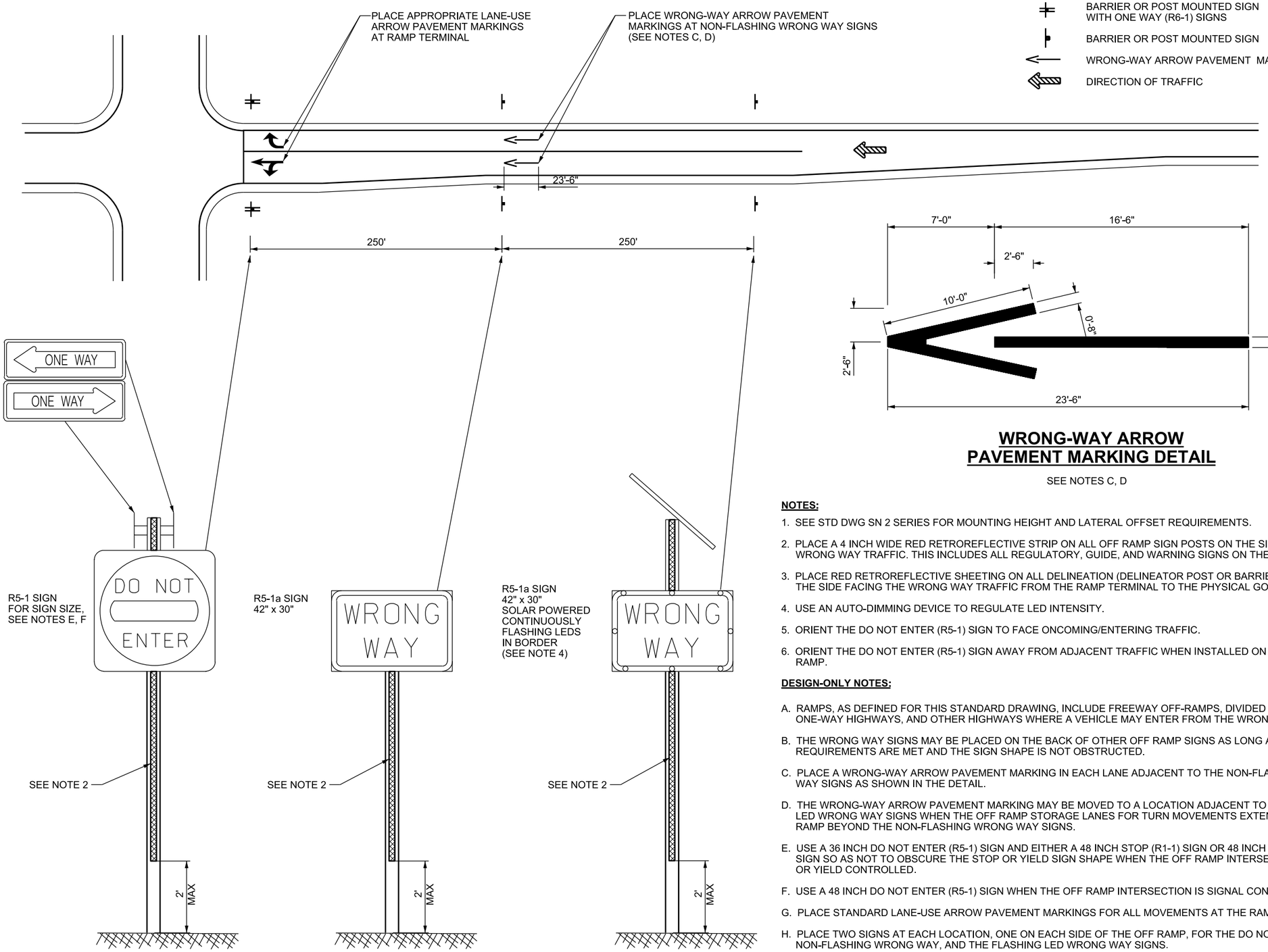


**LEGEND**

- BARRIER OR POST MOUNTED SIGN WITH ONE WAY (R6-1) SIGNS
- BARRIER OR POST MOUNTED SIGN
- WRONG-WAY ARROW PAVEMENT MARKING
- DIRECTION OF TRAFFIC




## WRONG-WAY ARROW PAVEMENT MARKING DETAIL

SEE NOTES C, D

**NOTES:**

1. SEE STD DWG SN 2 SERIES FOR MOUNTING HEIGHT AND LATERAL OFFSET REQUIREMENTS.
2. PLACE A 4 INCH WIDE RED RETROREFLECTIVE STRIP ON ALL OFF RAMP SIGN POSTS ON THE SIDE FACING THE WRONG WAY TRAFFIC. THIS INCLUDES ALL REGULATORY, GUIDE, AND WARNING SIGNS ON THE OFF RAMP.
3. PLACE RED RETROREFLECTIVE SHEETING ON ALL DELINEATION (DELINEATOR POST OR BARRIER MOUNT) ON THE SIDE FACING THE WRONG WAY TRAFFIC FROM THE RAMP TERMINAL TO THE PHYSICAL GORE.
4. USE AN AUTO-DIMMING DEVICE TO REGULATE LED INTENSITY.
5. ORIENT THE DO NOT ENTER (R5-1) SIGN TO FACE ONCOMING/ENTERING TRAFFIC.
6. ORIENT THE DO NOT ENTER (R5-1) SIGN AWAY FROM ADJACENT TRAFFIC WHEN INSTALLED ON A TWO-WAY RAMP.

**DESIGN-ONLY NOTES:**

A. RAMPS, AS DEFINED FOR THIS STANDARD DRAWING, INCLUDE FREEWAY OFF-RAMPS, DIVIDED HIGHWAYS, ONE-WAY HIGHWAYS, AND OTHER HIGHWAYS WHERE A VEHICLE MAY ENTER FROM THE WRONG DIRECTION.

B. THE WRONG WAY SIGNS MAY BE PLACED ON THE BACK OF OTHER OFF RAMP SIGNS AS LONG AS SPACING REQUIREMENTS ARE MET AND THE SIGN SHAPE IS NOT OBSTRUCTED.

C. PLACE A WRONG-WAY ARROW PAVEMENT MARKING IN EACH LANE ADJACENT TO THE NON-FLASHING WRONG WAY SIGNS AS SHOWN IN THE DETAIL.

D. THE WRONG-WAY ARROW PAVEMENT MARKING MAY BE MOVED TO A LOCATION ADJACENT TO THE FLASHING LED WRONG WAY SIGNS WHEN THE OFF RAMP STORAGE LANES FOR TURN MOVEMENTS EXTEND UP THE OFF RAMP BEYOND THE NON-FLASHING WRONG WAY SIGNS.

E. USE A 36 INCH DO NOT ENTER (R5-1) SIGN AND EITHER A 48 INCH STOP (R1-1) SIGN OR 48 INCH YIELD (R1-2) SIGN SO AS NOT TO OBSCURE THE STOP OR YIELD SIGN SHAPE WHEN THE OFF RAMP INTERSECTION IS STOP OR YIELD CONTROLLED.

F. USE A 48 INCH DO NOT ENTER (R5-1) SIGN WHEN THE OFF RAMP INTERSECTION IS SIGNAL CONTROLLED.

G. PLACE STANDARD LANE-USE ARROW PAVEMENT MARKINGS FOR ALL MOVEMENTS AT THE RAMP TERMINAL.

H. PLACE TWO SIGNS AT EACH LOCATION, ONE ON EACH SIDE OF THE OFF RAMP, FOR THE DO NOT ENTER, NON-FLASHING WRONG WAY, AND THE FLASHING LED WRONG WAY SIGNS.

I. FLASHING LED SIGN ASSEMBLIES MAY BE OMMITTED UPON APPROVAL OF THE REGION TRAFFIC OPERATIONS ENGINEER WHEN GEOMETRIC CONSIDERATIONS OR OTHER FACTORS AFFECT THEIR INSTALLATION.

SUPPLEMENTAL DRAWING

REVISIONS

| NO. | DATE | APPR. | REMARKS |
|---|---|---|---|
| 1 | 8/31/17 | CGW | WRONG WAY SIGN SIZE UPDATED FOR CONSISTENCY |

**UTAH DEPARTMENT OF TRANSPORTATION**
STANDARD DRAWINGS FOR ROAD AND BRIDGE CONSTRUCTION
SALT LAKE CITY, UTAH

RECOMMENDED FOR APPROVAL — AUG.31, 2017 DATE
CHAIRMAN STANDARDS COMMITTEE APPROVED — AUG.31, 2017 DATE
DEPUTY DIRECTOR

WRONG WAY SIGNING, DELINEATION, AND MARKINGS FOR OFF-RAMPS AND DIVIDED HIGHWAYS
STANDARD DRAWING TITLE

STD. DWG. NO.
SN 2C

DGN File:Q:\StandardsandSpecsSection\2017Section\All Supp Issues\Issue # 2 08-31-2017\Drawings\SN02C.dgn
12-SEP-2017

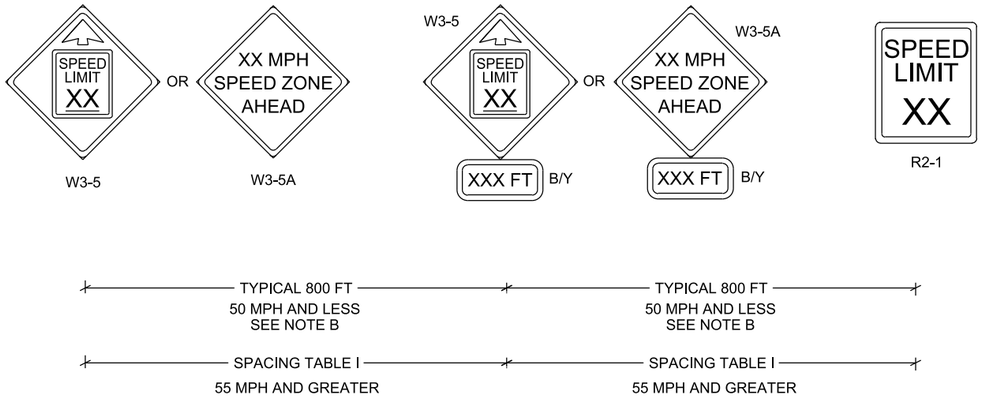


## SPEED REDUCTION OF 20 MPH OR 25 MPH THREE SIGN SEQUENCE

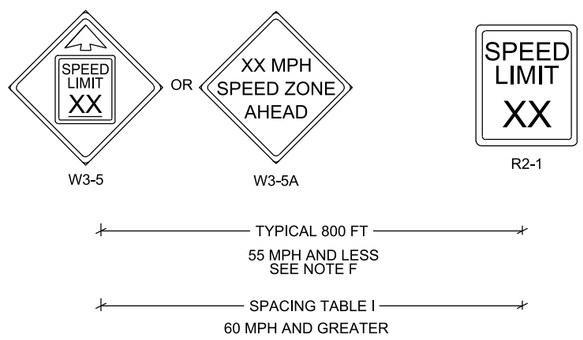


## SPEED REDUCTION OF 15 MPH TWO SIGN SEQUENCE

SEE NOTE C

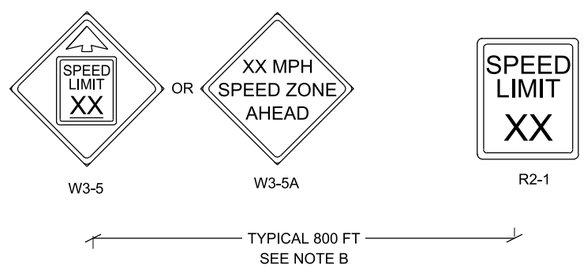


## SPEED REDUCTION OF 10 MPH OR LESS (OPTIONAL) TWO SIGN SEQUENCE

APPROACH SPEED (MPH)

| REDUCED SPEED (MPH) | 80 | 75 | 70 | 65 | 60 | 55 | 50 | 45 | 40 | 35 | 30 |
|---|---|---|---|---|---|---|---|---|---|---|---|
| 75 | 500 | | | | | | | | | | |
| 70 | 830 | 460 | | | | | | | | | |
| 65 | 1150 | 780 | 420 | | | | | | | | |
| 60 | 1440 | 1070 | 710 | 380 | | | | | | | |
| 55 | 1710 | 1330 | 980 | 650 | 340 | | | | | | |
| 50 | 1960 | 1580 | 1230 | 900 | 590 | 310 | | | | | |
| 45 | | 1800 | 1450 | 1120 | 810 | 530 | 270 | | | | |
| 40 | | | 1650 | 1320 | 1010 | 730 | 470 | 230 | | | |
| 35 | | | | 1490 | 1190 | 910 | 640 | 410 | 190 | | |
| 30 | | | | | 1340 | 1060 | 790 | 560 | 350 | 150 | |
| 25 | | | | | | 1180 | 920 | 690 | 470 | 280 | 120 |
| 20 | | | | | | | 1030 | 790 | 580 | 390 | 220 |
| 15 | | | | | | | | 870 | 660 | 470 | 300 |

## MINIMUM SIGN SPACING (FT)

TABLE 1

SEE NOTES E AND F

**DESIGN-ONLY NOTES:**

A. USE MINIMUM R2-1 SIGN SIZE OF 36 INCHES x 48 INCHES FOR CONVENTIONAL ROADS AND EXPRESSWAYS.

USE R2-1 SIGN SIZE OF 48 INCHES x 60 INCHES FOR FREEWAYS.

USE W3-5 (OR W3-5A) SIGN SIZE OF 48 INCHES x 48 INCHES FOR FREEWAYS AND EXPRESSWAYS.

USE W3-5 (OR W3-5A) SIGN SIZE OF 36 INCHES x 36 INCHES FOR CONVENTIONAL ROADS.

B. USE TABLE 1 FOR OPTIONAL SIGN SPACING UPON DIRECTION OF THE REGION TRAFFIC ENGINEER.

C. USE OF THREE SIGN SEQUENCE IS OPTIONAL FOR SPEED REDUCTION OF 15 MPH.

D. DO NOT MIX W3-5 WITH W3-5A SIGNS IN THE SAME SIGNING SEQUENCE.

E. STEP SPEED LIMIT DOWN IN INCREMENTS WHEN SPEED REDUCTION IS 30 MPH OR GREATER.

F. USE SINGLE SPEED REDUCTION OF 30 MPH UPON DIRECTION OF THE REGION TRAFFIC ENGINEER. USE THREE SIGN SEQUENCE AND MINIMUM SIGN SPACING TABLE 1.

DESIGN ONLY DRAWING | SUPPLEMENTAL DRAWING

REVISIONS

| NO. | DATE | APPR. | REMARKS |
|---|---|---|---|
| 1 | 8/31/17 | CGW | ADDED CLARIFICATION TO NOTE A |

UTAH DEPARTMENT OF TRANSPORTATION
STANDARD DRAWINGS FOR ROAD AND BRIDGE CONSTRUCTION
SALT LAKE CITY, UTAH

RECOMMENDED FOR APPROVAL — AUG. 31, 2017 DATE
CHAIRMAN STANDARDS COMMITTEE APPROVED — AUG. 31, 2017 DATE
DEPUTY DIRECTOR

SPEED REDUCTION SIGN SEQUENCE

STANDARD DRAWING TITLE

STD. DWG. NO.
SN 3

DGN File: Q:\Standards&Specs\Section\2017Section\All Supp Issues\Issue # 2 08-31-2017\Drawings\SN03.dgn
12-SEP-2017

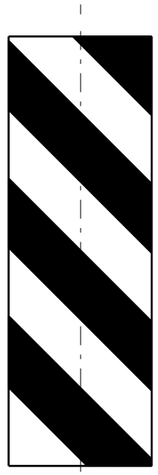

**TRAFFIC PASS RIGHT**
**OM3-L**

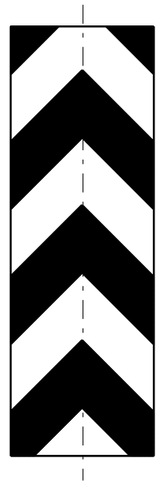

**TRAFFIC PASS EITHER SIDE**
**OM3-C**

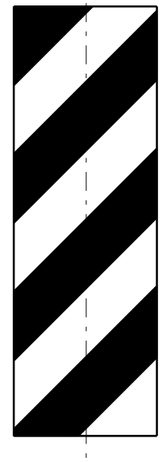

**TRAFFIC PASS LEFT**
**OM3-R**

**TYPE 3 OBJECT MARKERS**

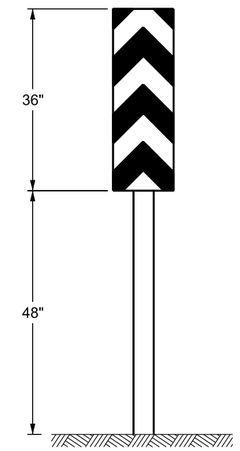


**OBJECT MARKERS**
**MOUNTING HEIGHT DETAIL**

OM3-C SHOWN (TYP)

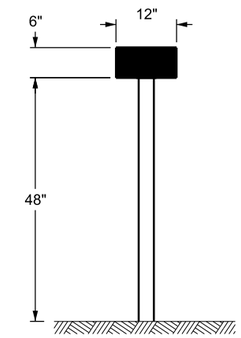


**OVERPASS MARKER**

OM2-2H SHOWN (TYP)

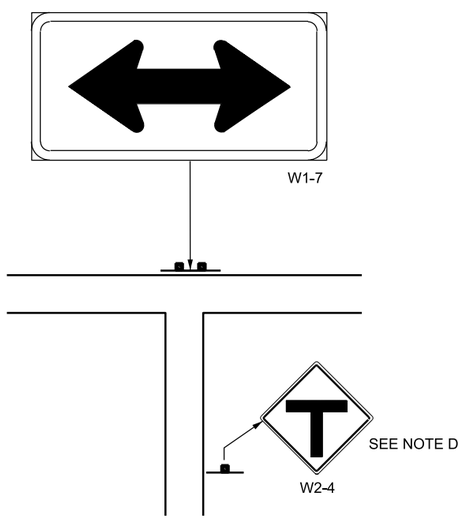


SEE THE UTAH MANUAL ON UNIFORM TRAFFIC CONTROL DEVICES AND THE REGION TRAFFIC ENGINEER FOR SIGN SIZES
SEE STD DWG SN 14B FOR POST SPACING
SEE STD DWG SN 2A FOR SIGN MOUNTING HEIGHT

**'T' INTERSECTION SIGNING**

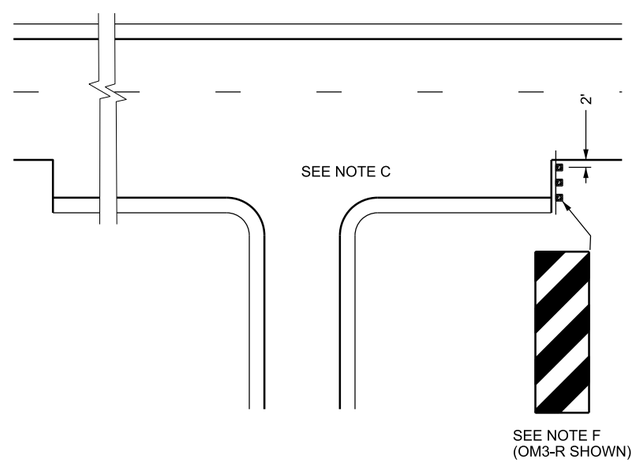


**PAVEMENT TRANSITION**

**DESIGN-ONLY NOTES:**

A. USE TYPE 3 OBJECT MARKERS TO MARK THE ENDS OF OBSTRUCTIONS SUCH AS NARROW BRIDGES AND CULVERTS. INSTALL THE MARKER ON EACH SIDE OF BOTH ENDS OF BRIDGE ON TWO-WAY ROADWAYS, AND ON EACH SIDE OF THE APPROACH END OF BRIDGE ON ONE-WAY ROADWAYS FOR NARROW BRIDGES.

B. USE TYPE 3, OBJECT MARKER TO MARK THE APPROACH TO THE ENDS OF BARRIERS THAT DO NOT HAVE A CRASH CUSHION OR END TREATMENT INSTALLED.

C. SEE ST SERIES STD DWGS FOR PAVEMENT MARKINGS AND STRIPING OF PAVEMENT TRANSITION.

D. PLACE THE APPROPRIATE INTERSECTION AHEAD SIGN FOR CONTROLLED OR UNCONTROLLED INTERSECTIONS. PLACE THE SIGN AN ADEQUATE DISTANCE FROM THE INTERSECTION TO ALLOW A PROPER RESPONSE. SEE THE UTAH MANUAL ON UNIFORM TRAFFIC CONTROL DEVICES TABLE 2C-4 FOR ADVISORY DISTANCES AND MORE INFORMATION.

E. INSTALL OVERPASS MARKER 2 FT BEHIND PARAPET.

F. PLACE OBJECT MARKER SIGNS AS FOLLOWS:
- GREATER THAN 8FT: MINIMUM OF 3 OBJECT MARKERS ON 6 FT CENTERS
- 4-8 FT: MINIMUM OF 2 OBJECT MARKERS EVENLY SPACED
- LESS THAN 4 FT: NO OBJECT MARKERS REQUIRED

SUPPLEMENTAL DRAWING

REVISIONS

| NO. | DATE | APPR. | REMARKS |
|---|---|---|---|
| 1 | 8/31/17 | CGW | UPDATED NOTES D, E, AND F. REMOVED OVERSIZED T INTER. SIGNS |

**UTAH DEPARTMENT OF TRANSPORTATION**
STANDARD DRAWINGS FOR ROAD AND BRIDGE CONSTRUCTION
SALT LAKE CITY, UTAH

RECOMMENDED FOR APPROVAL — AUG. 31, 2017 DATE
CHAIRMAN STANDARDS COMMITTEE APPROVED — AUG. 31, 2017 DATE
DEPUTY DIRECTOR

STANDARD DRAWING TITLE
OBJECT MARKERS
"T" INTERSECTION AND
PAVEMENT TRANSITION
GUIDANCE

STD. DWG. NO.
SN 6

DGN File: Q:\StandardsandSpecs\Section\2017Section\All Supp Issues\Issue # 2 08-31-2017\Drawings\SN06.dgn
12-SEP-2017

## ATTACHMENT TO POST WITH Z-BAR AND U-BOLT
FOR SIGN PANEL 36 INCH WIDE

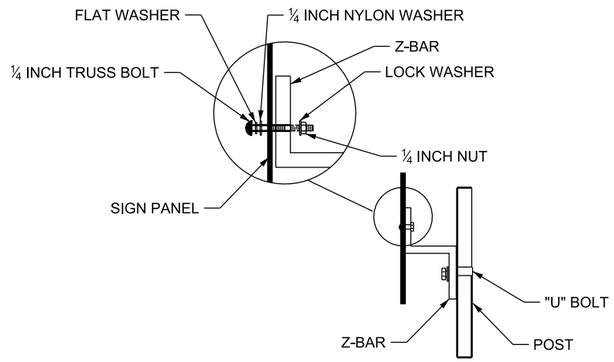


1. USE THIS INSTALLATION WHEN SIGN IS ON A SINGLE POST WITH MULTIPLE Z-BARS.
2. USE A LONG U-BOLT. REFER TO STD DWG SN 9B FOR U-BOLT REQUIREMENTS.
3. STAINLESS STEEL POP-RIVETS WITH WASHER MAY BE SUBSTITUTED FOR TRUSS BOLT.

## ATTACHMENT TO POST - SINGLE Z-BAR AND DOUBLE U-BOLT
FOR SIGN PANELS WITH 24 INCH HEIGHT OR LESS

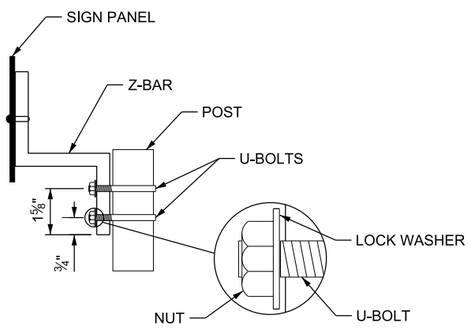


1. USE THIS INSTALLATION WHEN SIGN PANEL HAS ONLY ONE Z-BAR AND IS ATTACHED TO A SINGLE PANEL.
2. USE TWO LONG U-BOLTS. REFER TO STD DWG SN 9B FOR U-BOLT REQUIREMENTS.

## ATTACHMENT TO POST WITH Z-BAR AND CLAMP
FOR DOUBLE POST APPLICATIONS

Z-BAR AND SADDLE REQUIRED WHEN SIGN IS MOUNTED ON DOUBLE POSTS.

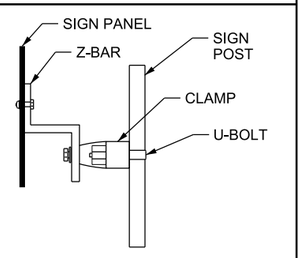


## ATTACHMENT TO POST WITH CLAMP
FOR SIGN PANEL 30 INCH WIDE OR LESS

1. USE WITH P3, P4, AND P5 POSTS ON A SINGLE POST. DO NOT USE WITH MULTIPLE POSTS.
2. REFER TO STD DWG SN 9B FOR CLAMP AND HARDWARE REQUIREMENTS.

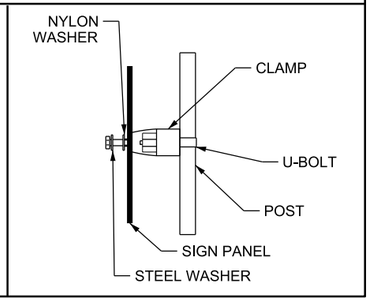


## SIGN PANEL TO POST DIRECT CONNECTION
FOR SIGN PANEL 30 INCH WIDE OR LESS WITH PREPUNCHED POST

### BOLT & WASHER REQUIREMENTS

1. USE WITH P1 AND P2 POSTS.
2. HARDWARE:
   - ⅜ x 3 INCH LONG BOLT
   - ⅜ INCH DIA HEX HEAD BOLT WITH NUT
   - ⅜ INCH DIA STEEL FLAT WASHER
   - ⅜ INCH DIA STEEL LOCK WASHER
   - ⅜ INCH DIA NYLON WASHER
3. GALVANIZE ALL STEEL COMPONENTS EXCEPT AS NOTED.

### ASSEMBLY

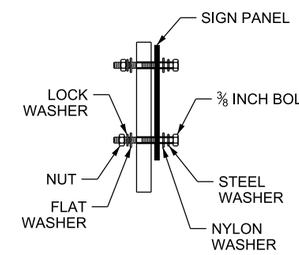


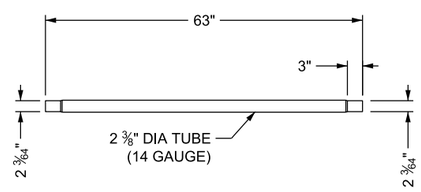


## EXTENSION
SEE NOTES 4 AND 7

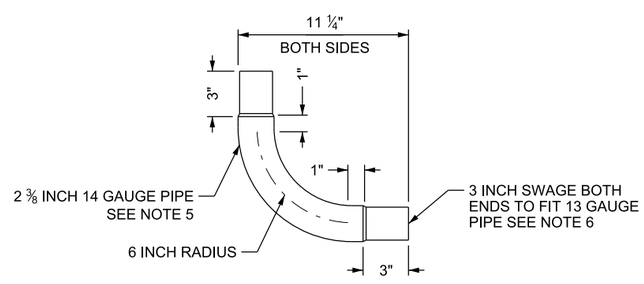


## 90 DEGREE POST EXTENSION
SEE NOTE 6

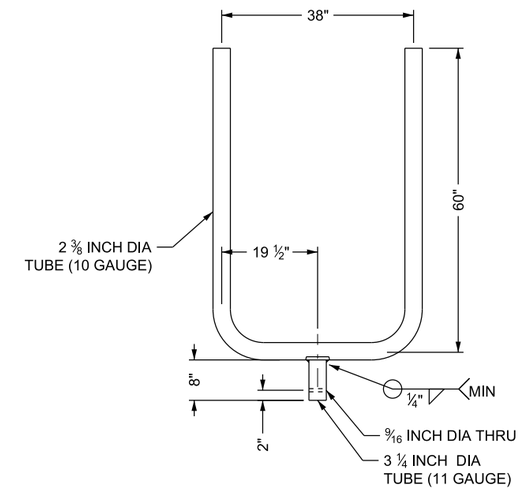


## "U" BRACKET
SEE NOTE 7

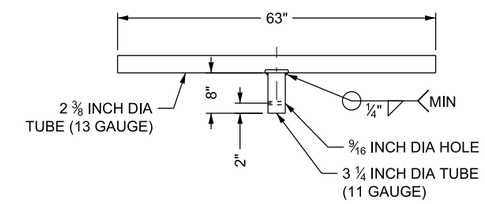


## "T" BRACKET
SEE NOTE 7

**NOTES:**

1. GALVANIZE PIPE TO MEET ASTM A 513.
2. COAT WELD JOINTS WITH ZINC RICH PAINT.
3. CUTTING OF "T" OR "U" BRACKET OR EXTENSION TO MEET REQUIRED LENGTH OR HEIGHT IS ACCEPTABLE. COAT CUT ENDS WITH ZINC RICH PAINT.
4. SWAGE ENDS OF EXTENSION TO PROVIDE A SNUG FIT IN A 2 ⅜ INCH DIA (10 BWG) TUBING.
5. 2 ⅜ INCH DIA 14 BWG TUBING PER ASTM A 787 AWG FABRICATED FROM GALVANIZED STEEL SHEET 0.083 INCH THICK, ASTM A 653 SS GRADE G90. REMETALIZE WELD SEAM USING ZINC WIRE ACCORDING TO ASTM B 833. TUBE OD WILL BE TREATED WITH CHROMATE CONVERSION SOLUTION AND PROTECTED WITH CLEAR ACRYLIC FILM.
6. BEND 90 DEGREES AND SWAGE 3 INCH ON BOTH ENDS. SWAGE TO BE 1 INCH FROM TANGENT POINT OF BEND RADIUS TO SHOULDER OF SWAGE. SWAGE TO FIT SNUG IN 13 GAUGE PIPE.
7. SWAGE 3 INCH ON BOTH ENDS. SWAGE TO FIT SNUG IN 13 GAUGE PIPE.

SUPPLEMENTAL DRAWING

REVISIONS

| NO. | DATE | APPR. | REMARKS |
|---|---|---|---|
| 1 | 8/31/17 | CGW | UPDATED REFERENCES AND NOTE 6, ADDED NOTE 7 |

**UTAH DEPARTMENT OF TRANSPORTATION**
STANDARD DRAWINGS FOR ROAD AND BRIDGE CONSTRUCTION
SALT LAKE CITY, UTAH

RECOMMENDED FOR APPROVAL — AUG. 31, 2017 DATE
CHAIRMAN STANDARDS COMMITTEE APPROVED — AUG. 31, 2017 DATE
DEPUTY DIRECTOR

TUBULAR STEEL SIGN MOUNTING REQUIREMENTS
STANDARD DRAWING TITLE

STD. DWG. NO.
SN 9A

DGN File: D:\StandardsandSpecs\Section\2017\Section\All Supp Issues\Issue # 2 08-31-2017\Drawings\SN09A.dgn
12-SEP-2017

| POST SELECTION SINGLE POST APPLICATION | | | | | | |
|---|---|---|---|---|---|---|
| | | SIGN WIDTH (FT.) | | | | |
| | | | 2 | 2.5 | 3 | 4 | 5 |
| SIGN HEIGHT(FT.) | 1 | | | | | P3 | P3 |
| | 2 | | | | | P3 | P3 |
| | 2.5 | | | | | P3 | P3 |
| | 3 | | | | P3 | P4 | P4 |
| | 4 | | | P3 | P4 | P4 | P5 |
| | 5 | | P3 | P3 | P4 | P4 | P5 |
| | 6 | | P3 | P3 | P4 | P5 | P5 |
| | 7 | | P3 | P3 | P4 | P5 | P5 |

"T" OR "U" BRACKET RECOMMENDED FOR SIGNS GREATER THAN 4 FEET WIDE

| POST SELECTION DOUBLE POST APPLICATION | | | | | | | |
|---|---|---|---|---|---|---|---|
| | | SIGN WIDTH (FT.) | | | | | |
| | | 5 | 6 | 7 | 8 | 9 | 10 |
| SIGN HEIGHT(FT.) | 4 | P3 | P4 | P4 | P4 | P5 | P5 |
| | 5 | P3 | P4 | P5 | P5 | P5 | P5 |
| | 6 | P3 | P4 | P5 | P5 | P5 | P5 |
| | 7 | P4 | P5 | P5 | P5 | P5 | |
| | 8 | P5 | P5 | P5 | P5 | | |

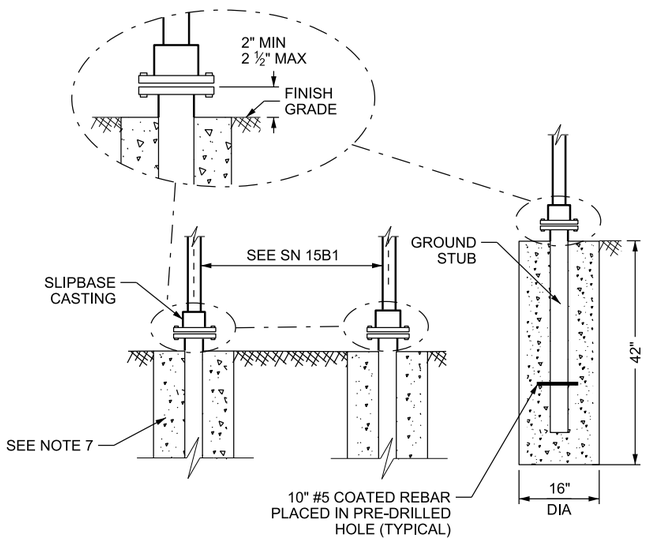


## SLIPBASE GROUND STUB FOUNDATION DETAIL

APPLIES TO SINGLE AND DOUBLE POST APPLICATIONS

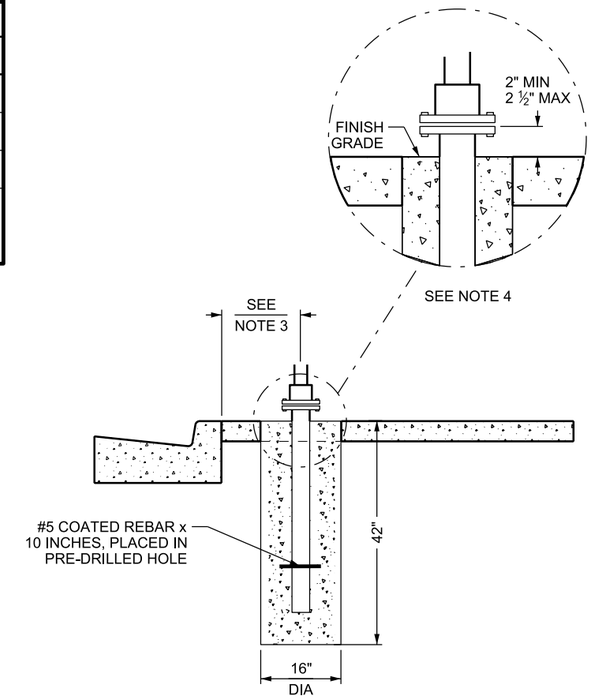


## SLIPBASE DETAIL FOR SIDEWALK

**NOTES:**

1. REFER TO STD DWG SN 12B FOR POST REQUIREMENTS.
2. REFER TO SN 9 SERIES STD DWGS FOR MOUNTING AND HARDWARE REQUIREMENTS.
3. REFER TO SN 2 SERIES STD DWGS FOR HEIGHT AND OFFSET REQUIREMENTS.
4. CORE DRILL SLIPBASE HOLE. INSTALL SLIPBASE AFTER PLACEMENT OF FINISHED GRADE.
5. PLACE TOP OF SLIPBASE STUB FLUSH WITH TOP OF THE ISLAND, WITH A TOLERANCE OF + ⅛ INCH, FOR ISLAND INSTALLATION (DO NOT PLACE BELOW TOP OF CURB).
6. USE THE LOWER VALUE WHEN THE SIGN WIDTH OR HEIGHT FALLS BETWEEN TWO VALUES, FOR POST AND SPACING REQUIREMENTS.
7. USE CONCRETE CLASS B(AE). PROJECT TOTALS REQUIRING ONE CUBIC YARD OR LESS A COMMERCIALLY AVAILABLE PRODUCT THAT MEETS OR EXCEEDS 4,000 PSI OR A CONCRETE MIX MEETING STANDARD SPECIFICATION 03055 CONCRETE CLASS B MAY BE USED. MIX BEFORE PLACING.
8. ALLOW FOR 7 DAY CURE TIME BEFORE INSTALLING SIGN POST. PRECAST SIGN FOUNDATION MAY BE USED.
9. SEE STD DWG SN 15F FOR BREAKAWAY SUPPORT STUB HEIGHT MEASUREMENT.

**DESIGN-ONLY NOTES:**

A. DO NOT EXCEED MAXIMUM SQUARE FOOTAGE OF SINGLE POST APPLICATION BY MORE THAN 25 PERCENT WHEN INSTALLING A SUPPLEMENTAL SIGN (EX: POST P5 - MAX. SIGN SIZE 5 FT Wx 7 FT H = 35 SQ FT + 25 PERCENT = 43¾ SQ FT > (5 FT W x 7 FT H ) + ( 3 FT W x 2.5 FT H ) = 42½ SQ FT ).

SUPPLEMENTAL DRAWING

REVISIONS

| NO. | DATE | APPR. | REMARKS |
|---|---|---|---|
| 1 | 8/31/17 | CGW | ADDED P3 POSTS TO SMALLER SIGNS IN TABLES. UPDATED SHEET TITLE. |

**UTAH DEPARTMENT OF TRANSPORTATION**
STANDARD DRAWINGS FOR ROAD AND BRIDGE CONSTRUCTION
SALT LAKE CITY, UTAH

RECOMMENDED FOR APPROVAL — AUG. 31, 2017 — DATE
CHAIRMAN, STANDARDS COMMITTEE — AUG. 31, 2017 — DATE
APPROVED — DEPUTY DIRECTOR

STANDARD DRAWING TITLE: SLIPBASE SIGN BASE (B3) INSTALLATION

STD. DWG. NO. SN 12A

DGN File: D:\StandardsandSpecsSection\2017Section\All Supp Issues\Issue # 2 08-31-2017\Drawings\SN12A.dgn
12-SEP-2017

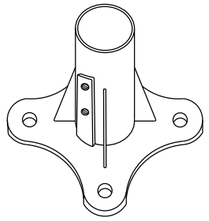

**BASE CASTING**

ASTM A 536 65-45-12
DUCTILE IRON
SEE NOTE A

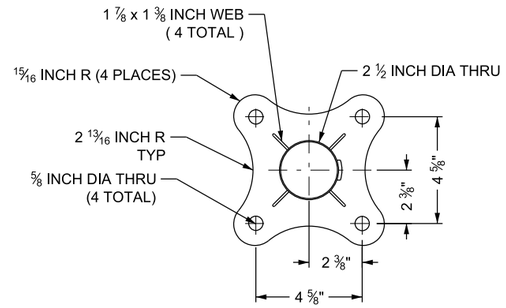


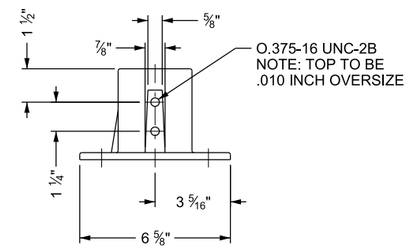


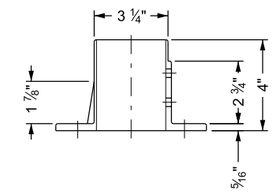


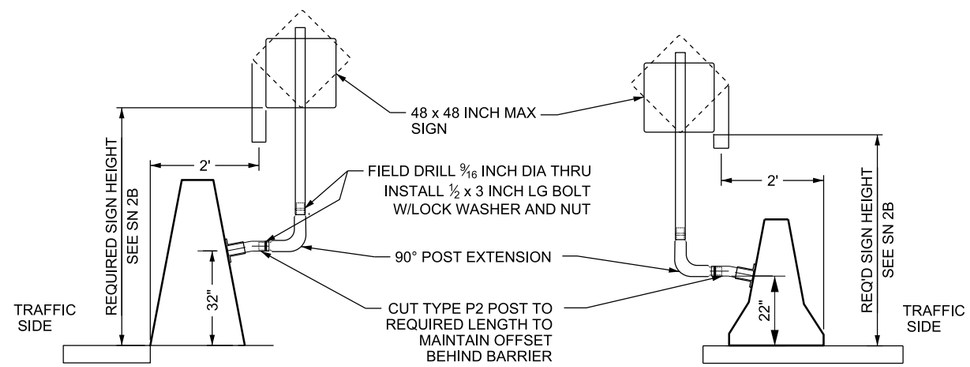


HORIZONTAL INSTALLATION NOTE: USE A 90 DEGREE POST EXTENSION WHEN MOUNTED HORIZONTALLY. REFER TO STD DWG SN 9A FOR POST EXTENSION REQUIREMENTS. FORM SIGN SUPPORT SYSTEM SO SIGN POST IS PLUMB.

**HORIZONTAL INSTALLATION**

MOUNTING HARDWARE:
4- EACH 1/2 x 4 INCH MECHANICAL WEDGE ANCHORS.
4- EACH 1/2 INCH FLAT WASHERS
4- EACH 1/2 INCH LOCK WASHERS
4- EACH 1/2 INCH NUTS
2- EACH BEVELED WASHERS. REQUIRED FOR HORIZONTAL MOUNTING ONLY.
ALL HARDWARE WILL BE GALVANIZED OR ZINC PLATED.

INSTALLATION REQUIREMENTS:
DRILL: 4 - 1/2 INCH HOLES 4 1/2 INCHES DEEP,
CLEAN HOLE PRIOR TO INSTALLING ANCHORS

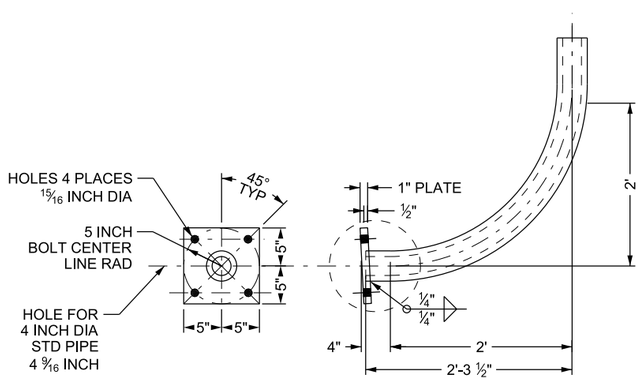


**SIDE MOUNTED BARRIER BASE**

**TUBULAR STEEL SIGN BASE SURFACE MOUNT (B4B)**
**FOR 2 3/8 INCH DIAMETER POSTS (P1 OR P2 POSTS)**

**NOTES:**

1. USE P1 OR P2 POST. REFER TO STD DWG SN 11A.

**DESIGN-ONLY NOTES:**

A. USE BASE CASTING INSTALLATION ONLY ON ROADS WITH POSTED SPEED OF 45 MPH OR LOWER AND ONLY IN RETROFIT INSTALLATIONS UNDER THE DIRECTION OF THE REGION TRAFFIC ENGINEER.

SUPPLEMENTAL DRAWING

REVISIONS

| NO. | DATE | APPR. | REMARKS |
|---|---|---|---|
| 1 | 8/31/17 | CGW | CORRECTED NOTE A AND TITLE FOR SIDE MOUNTED BARRIER DETAIL |

**UTAH DEPARTMENT OF TRANSPORTATION**
STANDARD DRAWINGS FOR ROAD AND BRIDGE CONSTRUCTION
SALT LAKE CITY, UTAH

RECOMMENDED FOR APPROVAL — AUG. 31, 2017 DATE
CHAIRMAN STANDARDS COMMITTEE APPROVED — AUG. 31, 2017 DATE
DEPUTY DIRECTOR

SIDE MOUNTED TUBULAR STEEL SIGN BASE (B4B)
STANDARD DRAWING TITLE

STD. DWG. NO.
SN 13

12-SEP-2017
DGN File: D:\StandardsandSpecsSection\2017Section\All Supp Issues\Issue # 2 08-31-2017\Drawings\SN13.dgn

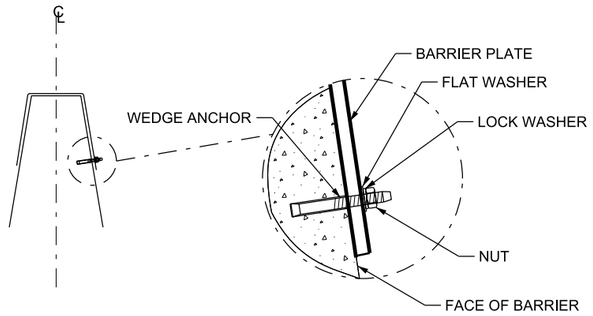


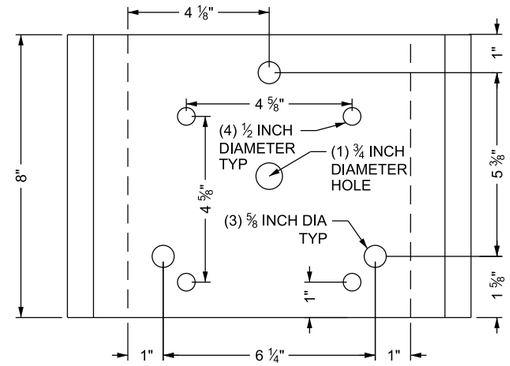


**TOP VIEW**

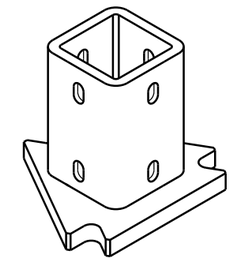

**BASE B7D**

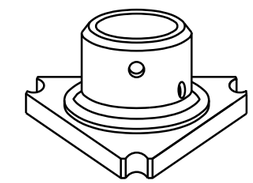

**BASE B3**

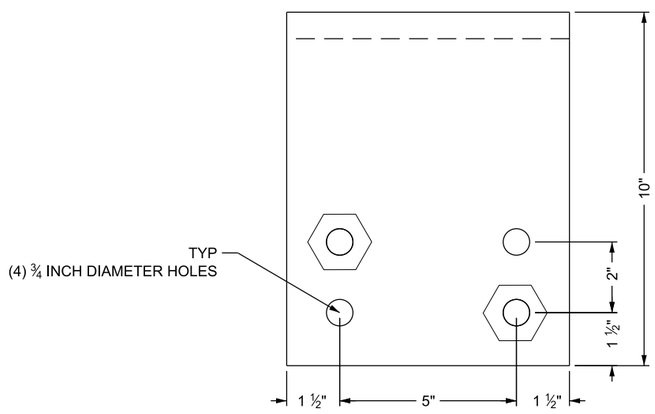


**SIDE VIEW**

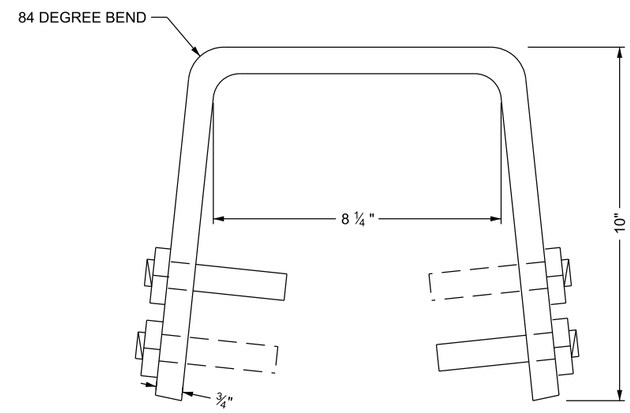


INSTALL 2 BOLTS EACH SIDE. STAGGER BOLTS SO EACH BOLT IS OPPOSITE AN EMPTY HOLE IN THE SADDLE BRACKET.

**END VIEW**

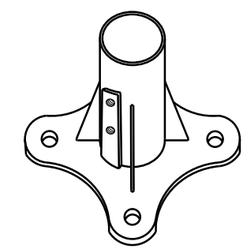

**BASE B4B**

## 42-INCH CONSTANT SLOPE BARRIER PLATE
## TOP MOUNT DETAIL

MODIFIED SADDLE BRACKET

**NOTES:**

1. REFER TO STD DWG SN 8 FOR SIGN MOUNTING AND HARDWARE REQUIREMENTS.
2. REFER TO STD DWG SN 2B SIGN MOUNTING HEIGHT AND SIGN WIDTH REQUIREMENT.
3. REFER TO STD DWG SN 12A. POST LENGTH DETERMINED BY SIGN SIZE.
4. USE HOLES TAPPED 0.010 OVERSIZED FOR HOT DIP GALVANIZING.
5. USE BASE PLATE:
   ¾ INCH ASTM A 36 STEEL BEND AS PER DETAIL
   MEET ASTM A 123 GALVANIZING AFTER FABRICATION IS COMPLETED.
6. REQUIRED HARDWARE PER SIGN BASE:
   4 - ¾ x 5 ½ INCH MECHANICAL WEDGE ANCHORS HOT DIP GALVANIZED
   4 - ¾ INCH FLAT WASHERS HOT DIP GALVANIZED
   4 - ¾ INCH LOCK WASHERS HOT DIP GALVANIZED
   4 - ¾ INCH NUTS, HOT DIP GALVANIZED
7. DRILL (4) - ¾ INCH DIA HOLES 5 INCH DEEP, CLEAN HOLE PRIOR TO INSTALLING ANCHORS.
8. EXPOSE NO MORE THAN ½ INCH OF THREAD BEYOND NUT AFTER NUT IS TIGHTENED. DO NOT FLAME CUT WEDGE ANCHORS.
9. USE WITH B3, B7D, AND B4B BASES.

**DESIGN-ONLY NOTES:**

A. USE ONLY FOR RETROFIT INSTALLATIONS UNDER THE DIRECTION OF THE REGION TRAFFIC ENGINEER AND ONLY FOR SIGNS 20 SQ FT OR LESS.

SUPPLEMENTAL DRAWING

REVISIONS

| NO. | DATE | APPR. | REMARKS |
|---|---|---|---|
| 1 | 8/31/17 | CGW | UPDATED NOTE A AND ADDED 42-INCH TO DETAIL TITLE |

UTAH DEPARTMENT OF TRANSPORTATION
STANDARD DRAWINGS FOR ROAD AND BRIDGE CONSTRUCTION
SALT LAKE CITY, UTAH

RECOMMENDED FOR APPROVAL — AUG. 31, 2017 DATE
CHAIRMAN STANDARDS COMMITTEE APPROVED — AUG. 31, 2017 DATE
DEPUTY DIRECTOR

BARRIER MOUNTED TUBULAR STEEL SIGN BASES 20 SQ FT OR LESS

STANDARD DRAWING TITLE

STD. DWG. NO.
SN 14A

DGN File: O:\StandardsandSpecsSection\2017Section\All Supp Issues\Issue # 2 08-31-2017\Drawings\SN14A.dgn
12-SEP-2017

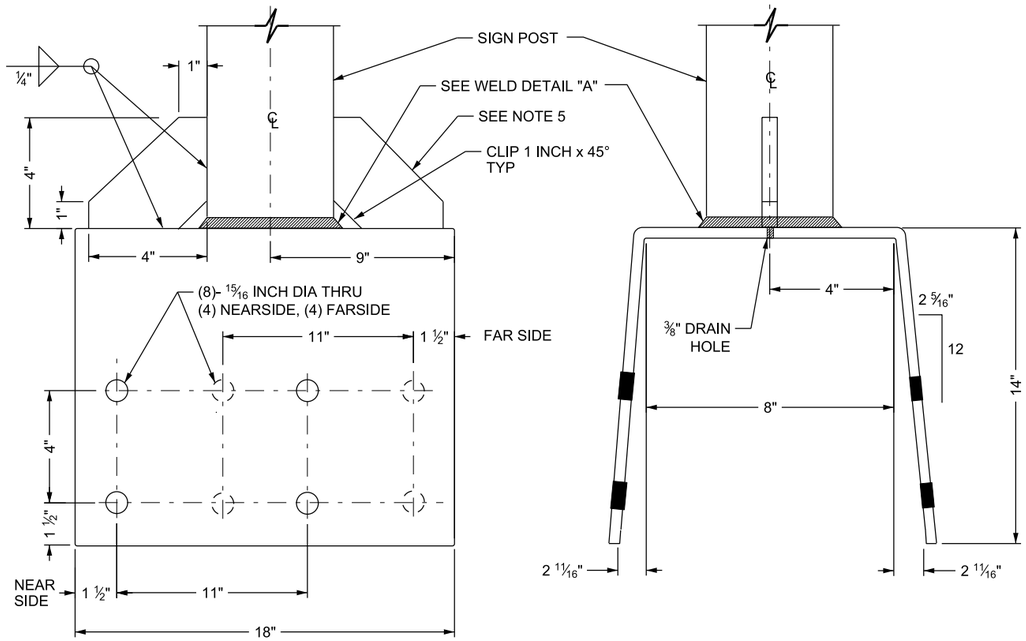


## 42-INCH CONSTANT SLOPE BARRIER PLATE DETAIL

## 42-INCH CONSTANT SLOPE BARRIER TOP MOUNT 4 INCH TUBULAR STEEL SIGN BASE (B5A)

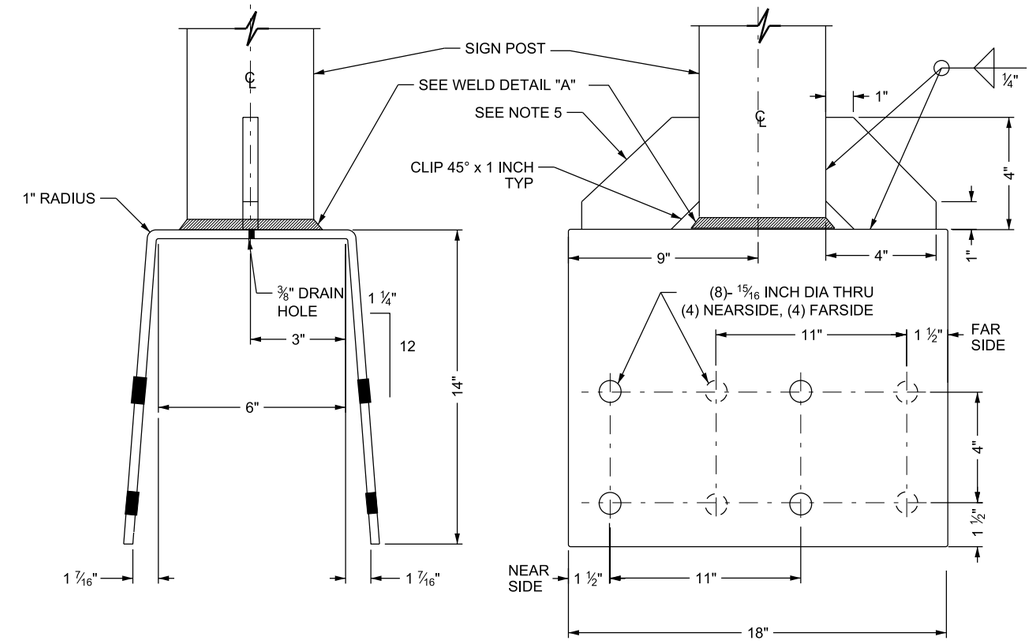


## JERSEY SHAPE BARRIER PLATE DETAIL

## JERSEY SHAPE BARRIER TOP MOUNT 4 INCH TUBULAR STEEL SIGN BASE(B5B)

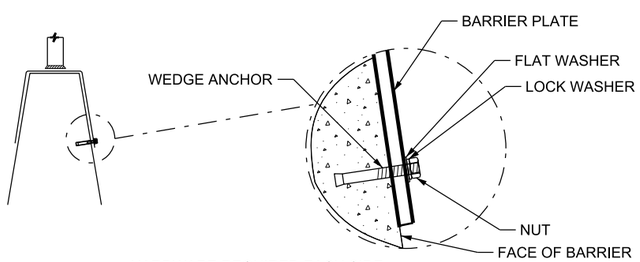


HARDWARE REQUIRED EACH SIDE:

4 - ¾ x 5 ½ INCH MECHANICAL WEDGE ANCHORS HOT DIPPED GALVANIZED

4 - ¾ INCH FLAT WASHERS HOT DIPPED GALVANIZED

4 - ¾ INCH LOCK WASHERS HOT DIPPED GALVANIZED

4 - ¾ INCH NUTS, HOT DIPPED GALVANIZED

INSTALLATION:

DRILL (4) - ¾ INCH DIA HOLES 5 INCH DEEP, CLEAN HOLE PRIOR TO INSTALLING ANCHORS

NO MORE THAN ½ INCH OF THREAD TO BE EXPOSED BEYOND NUT AFTER NUT IS TIGHTENED. DO NOT FLAME CUT WEDGE ANCHORS

## MOUNTING AND INSTALLATION FOR CONSTANT SLOPE AND STANDARD SECTION

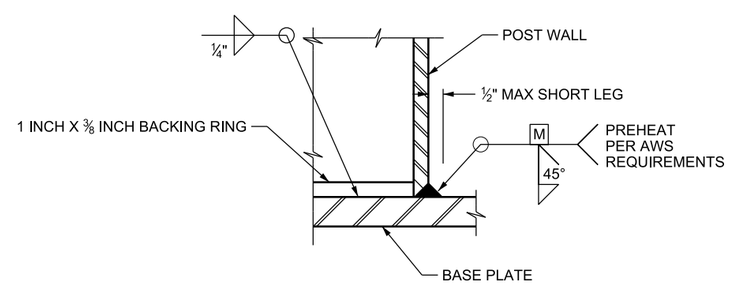


## WELD DETAIL "A"

**BARRIER PLATE FABRICATION REQUIREMENTS:**

BASE PLATE: ¾ INCH ASTM A 36 STEEL. BEND AS PER DETAIL
SIGN POST: 4 INCH NOMINAL SCHEDULE 80 MEETING ONE OF THE FOLLOWING ASTM GRADES: ASTM A 53 Gr B,
ASTM A 500 Gr B
ASTM API 5L Gr B / X42,
MEET ASTM A 123 GALVANIZING AFTER FABRICATION IS COMPLETED.

**GENERAL NOTES:**

1. REFER TO STD DWG SN 8 FOR SIGN MOUNTING AND HARDWARE REQUIREMENTS.
2. REFER TO STD DWG SN 2B FOR SIGN MOUNTING AND SIGN WIDTH REQUIREMENT.
3. POST LENGTH DETERMINED BY SIGN SIZE.
4. USE 36 SQ FT MAXIMUM SIGN PANEL AREA.
5. USE ½ INCH STIFFERNER PLATES FOR SIGN PANEL AREA GREATER THAN 27 SQ FT.
6. ALL WELDING TO COMPLY WITH AWS STD D1.1.
7. LEADING EDGE SHOULD BE FLUSH WITH BARRIER.

**DESIGN-ONLY NOTES:**

A. USE ONLY FOR RETROFIT INSTALLATIONS UNDER THE DIRECTION OF THE REGION TRAFFIC ENGINEER.

SUPPLEMENTAL DRAWING

REVISIONS

| NO. | DATE | APPR. | REMARKS |
|---|---|---|---|
| 1 | 8/31/17 | CGW | UPDATED NOTE A AND ADDED 42-INCH TO DETAIL TITLE |

UTAH DEPARTMENT OF TRANSPORTATION
STANDARD DRAWINGS FOR ROAD AND BRIDGE CONSTRUCTION
SALT LAKE CITY, UTAH

RECOMMENDED FOR APPROVAL — AUG. 31, 2017 DATE
CHAIRMAN STANDARDS COMMITTEE APPROVED — AUG. 31, 2017 DATE
DEPUTY DIRECTOR

BARRIER MOUNTED TUBULAR STEEL SIGN BASES (B5A AND B5B)

STANDARD DRAWING TITLE

STD. DWG. NO.
SN 14B

DGN File:Q:\StandardsandSpecsSection\2017Section\All Supp Issues\Issue # 2 08-31-2017\Drawings\SN14B.dgn
12-SEP-2017

## POST AND FOUNDATION TABLE

| SIGN HEIGHT, H | SIGN WIDTH, W: ONE POST 3'-0" | ONE POST 4'-0" | ONE POST 5'-0" | TWO POSTS 6'-0" | TWO POSTS 7'-0" | TWO POSTS 8'-0" | TWO POSTS 9'-0" | TWO POSTS 10'-0" | TWO POSTS 11'-0" | TWO POSTS 12'-0" | TWO POSTS 13'-0" | TWO POSTS 14'-0" | TWO POSTS 15'-0" | TWO POSTS 16'-0" | THREE POSTS 17'-0" | THREE POSTS 18'-0" TO 24'- 0" | FOUR POSTS 25'-0" | FOUR POSTS 26'-0" TO 32'-0" |
|---|---|---|---|---|---|---|---|---|---|---|---|---|---|---|---|---|---|---|
| 1'-0" | | | | S3 x 5.7<br>3'-9"/3'-6" | S3 x 5.7<br>3'-9"/3'-6" | S3 x 5.7<br>3'-9"/3'-6" | S3 x 5.7<br>3'-9"/3'-6" | S3 x 5.7<br>3'-9"/3'-6" | S3 x 5.7<br>3'-9"/3'-6" | S3 x 5.7<br>3'-9"/3'-9" | S3 x 5.7<br>3'-9"/3'-9" | S3 x 5.7<br>4'-0"/3'-9" | S3 x 5.7<br>4'-0"/3'-9" | S3 x 5.7<br>4'-0"/3'-9" | S3 x 5.7<br>4'-0"/4'-0" | S4 x 9.5<br>4'-0"/4'-0" | S3 x 5.7<br>4'-0"/4'-0" | S4 x 9.5<br>4'-0"/4'-0" |
| 1'- 6" | | | | S3 x 5.7<br>3'-9"/3'-6" | S3 x 5.7<br>3'-9"/3'-6" | S3 x 5.7<br>3'-9"/3'-9" | S3 x 5.7<br>4'-0"/3'-9" | S3 x 5.7<br>4'-0"/3'-9" | S3 x 5.7<br>4'-0"/3'-9" | S3 x 5.7<br>4'-0"/3'-9" | S4 x 9.5<br>4'-0"/3'-9" | S4 x 9.5<br>4'-0"/3'-9" | S4 x 9.5<br>4'-0"/3'-9" | S4 x 9.5<br>4'-0"/3'-9" | S4 x 9.5<br>4'-0"/4'-0" | S4 x 9.5<br>4'-3"/4'-0" | S4 x 9.5<br>4'-0"/4'-0" | S4 x 9.5<br>4'-3"/4'-0" |
| 2'- 0" | | | | S3 x 5.7<br>3'-9"/3'-9" | S3 x 5.7<br>4'-0"/3'-9" | S3 x 5.7<br>4'-0"/3'-9" | S4 x 9.5<br>4'-0"/3'-9" | S4 x 9.5<br>4'-0"/3'-9" | S4 x 9.5<br>4'-0"/3'-9" | S4 x 9.5<br>4'-0"/3'-9" | S4 x 9.5<br>4'-3"/3'-9" | S4 x 9.5<br>4'-3"/3'-9" | S4 x 9.5<br>4'-3"/4'-0" | S4 x 9.5<br>4'-3"/4'-0" | S4 x 9.5<br>4'-3"/4'-0" | S4 x 9.5<br>4'-3"/4'-0" | S4 x 9.5<br>4'-3"/4'-0" | S4 x 9.5<br>4'-3"/4'-0" |
| 2'- 6" | | | | S3 x 5.7<br>4'-0"/3'-9" | S4 x 9.5<br>4'-0"/3'-9" | S4 x 9.5<br>4'-0"/3'-9" | S4 x 9.5<br>4'-0"/3'-9" | S4 x 9.5<br>4'-3"/3'-9" | S4 x 9.5<br>4'-3"/3'-9" | S4 x 9.5<br>4'-3"/4'-0" | S4 x 9.5<br>4'-3"/4'-0" | S4 x 9.5<br>4'-3"/4'-0" | S4 x 9.5<br>4'-3"/4'-0" | S4 x 9.5<br>4'-6"/4'-0" | S4 x 9.5<br>4'-3"/4'-0" | S6 x 12.5<br>4'-6"/4'-0" | S4 x 9.5<br>4'-3"/4'-0" | S6 x 12.5<br>4'-6"/4'-0" |
| 3'- 0" | 3" Ø<br>4'-0"/4'-0" | 4" Ø<br>4'-0"/4'-0" | 4" Ø<br>4'-3"/4'-0" | S4 x 9.5<br>4'-0"/3'-9" | S4 x 9.5<br>4'-0"/3'-9" | S4 x 9.5<br>4'-3"/3'-9" | S4 x 9.5<br>4'-3"/3'-9" | S4 x 9.5<br>4'-3"/4'-0" | S4 x 9.5<br>4'-3"/4'-0" | S4 x 9.5<br>4'-3"/4'-0" | S4 x 9.5<br>4'-6"/4'-0" | S6 x 12.5<br>4'-6"/4'-0" | S6 x 12.5<br>4'-6"/4'-0" | S6 x 12.5<br>4'-6"/4'-0" | S6 x 12.5<br>4'-6"/4'-0" | S6 x 12.5<br>4'-6"/4'-0" | S6 x 12.5<br>4'-6"/4'-0" | S6 x 12.5<br>4'-6"/4'-3" |
| 4'- 0" | 4" Ø<br>4'-0"/4'-0" | 4" Ø<br>4'-3"/4'-0" | 5" Ø<br>4'-6"/4'-0" | S4 x 9.5<br>4'-3"/3'-9" | S4 x 9.5<br>4'- 3"/4'-0" | S4 x 9.5<br>4'-3"/4'-0" | S4 x 9.5<br>4'-3"/4'-0" | S6 x 12.5<br>4'-6"/4'-0" | S6 x 12.5<br>4'-6"/4'-0" | S6 x 12.5<br>4'-6"/4'-0" | S6 x 12.5<br>4'-6"/4'-3" | S6 x 12.5<br>4'-9"/4'-3" | S6 x 12.5<br>4'-9"/4'-3" | S6 x 12.5<br>4'-9"/4'-3" | S6 x 12.5<br>4'-9"/4'-3" | S6 x 12.5<br>4'-9"/4'-3" | S6 x 12.5<br>4'-9"/4'-3" | S6 x 12.5<br>4'-9"/4'-3" |
| 5'- 0" | 4" Ø<br>4'-3"/4'-0" | 5" Ø<br>4'-6"/4'-0" | 5" Ø<br>4'-6"/4'-3" | S4 x 9.5<br>4'-3"/4'-0" | S6 x 12.5<br>4'-6"/4'-0" | S6 x 12.5<br>4'-6"/4'-0" | S6 x 12.5<br>4'-6"/4'-0" | S6 x 12.5<br>4'-9"/4'-3" | S6 x 12.5<br>4'-9"/4'-3" | S6 x 12.5<br>4'-9"/4'-3" | S6 x 12.5<br>4'-9"/4'-3" | S6 x 12.5<br>5'-0"/4'-3" | S6 x 12.5<br>5'-0"/4'-6" | S6 x 12.5<br>5'-0"/4'-6" | S6 x 12.5<br>5'-0"/4'-6" | S6 x 12.5<br>5'-0"/4'-6" | S6 x 12.5<br>5'-0"/4'-6" | S6 x 12.5<br>5'-0"/4'-6" |
| 6'- 0" | 5" Ø<br>4'-6"/4'-0" | 5" Ø<br>4'-9"/4'-3" | 6" Ø<br>4'-9"/4'-3" | S4 x 9.5<br>4'-6"/4'-0" | S6 x 12.5<br>4'-6"/4'-0" | S6 x 12.5<br>4'-9"/4'-3" | S6 x 12.5<br>4'-9"/4'-3" | S6 x 12.5<br>4'-9"/4'-3" | S6 x 12.5<br>5'-0"/4'-3" | S6 x 12.5<br>5'-0"/4'-6" | S6 x 12.5<br>5'-0"/4'-6" | S6 x 17.25<br>5'-6"/4'-6" | S6 x 17.25<br>5'-6"/4'-6" | S8 x 18.4<br>5'-6"/4'-6" | S6 x 17.25<br>5'-6"/4'-6" | S8 x 18.4<br>5'-6"/4'-6" | S6 x 17.25<br>5'-6"/4'-6" | S8 x 18.4<br>5'-6"/4'-6" |
| 7'- 0" | 5" Ø<br>4'-9"/4'-0" | 6" Ø<br>5'-0"/4'-3" | 6" Ø<br>5'-0"/4'-6" | S6 x 12.5<br>4'-9"/4'-0" | S6 x 12.5<br>4'-9"/4'-3" | S6 x 12.5<br>4'-9"/4'-3" | S6 x 12.5<br>5'-0"/4'-3" | S6 x 12.5<br>5'-0"/4'-3" | S6 x 12.5<br>5'-6"/4'-6" | S6 x 17.25<br>5'-6"/4'-6" | S8 x 18.4<br>5'-6"/4'-6" | S8 x 18.4<br>5'-6"/4'-6" | S8 x 18.4<br>5'-6"/4'-9" | S8 x 18.4<br>5'-6"/4'-9" | S8 x 18.4<br>5'-6"/4'-9" | S8 x 18.4<br>5'-6"/4'-9" | S8 x 18.4<br>5'-6"/4'-9" | S8 x 18.4<br>5'-6"/4'-9" |
| 8'- 0" | 5" Ø<br>4'-9"/4'-3" | 6" Ø<br>5'-0"/4'-3" | 6" Ø<br>5'-6"/4'-6" | S6 x 12.5<br>4'-9"/4'-3" | S6 x 12.5<br>5'-0"/4'-3" | S6 x 12.5<br>5'-0"/4'-3" | S6 x 12.5<br>5'-6"/4'-6" | S6 x 17.25<br>5'-6"/4'-6" | S6 x 17.25<br>5'-6"/4'-6" | S8 x 18.4<br>5'-6"/4'-6" | S8 x 18.4<br>5'-6"/4'-9" | S8 x 18.4<br>6'-0"/4'-9" | S8 x 18.4<br>6'-0"/4'-9" | S8 x 18.4<br>6'-0"/4'-9" | S8 x 18.4<br>6'-0"/4'-9" | S8 x 18.4<br>6'-0"/4'-9" | S8 x 18.4<br>6'-0"/4'-9" | S8 x 18.4<br>6'-0"/4'-9" |
| 9'- 0" | 6" Ø<br>5'-0"/4'-3" | 6" Ø<br>5'-6"/4'-6" | 8" Ø<br>5'-6"/4'-6" | S6 x 12.5<br>5'-0"/4'-3" | S6 x 12.5<br>5'-0"/4'-3" | S6 x 12.5<br>5'-6"/4'-6" | S6 x 17.25<br>5'-6"/4'-6" | S8 x 18.4<br>5'-6"/4'-6" | S8 x 18.4<br>5'-6"/4'-9" | S8 x 18.4<br>6'-0"/4'-9" | S8 x 18.4<br>6'-0"/4'-9" | S8 x 18.4<br>6'-0"/4'-9" | S8 x 18.4<br>6'-0"/5'-0" | W10 x 19<br>6'-0"/5'-0" | S8 x 18.4<br>6'-0"/5'-0" | W10 x 19<br>6'-0"/5'-0" | S8 x 18.4<br>6'-0"/5'-0" | W10 x 19<br>6'-0"/5'-0" |
| 10'- 0" | 6" Ø<br>5'-6"/4'-3" | 8" Ø<br>5'-6"/4'-6" | 8" Ø<br>6'-0"/5'-0" | S6 x 12.5<br>5'-6"/4'-3" | S6 x 17.25<br>5'-6"/4'-6" | S6 x 17.25<br>5'-6"/4'-6" | S8 x 18.4<br>5'-6"/4'-6" | S8 x 18.4<br>6'-0"/4'-9" | S8 x 18.4<br>6'-0"/4'-9" | S8 x 18.4<br>6'-0"/4'-9" | S8 x 18.4<br>6'-0"/5'-0" | W10 x 19<br>6'-6"/5'-0" | W10 x 19<br>6'-6"/5'-0" | W10 x 19<br>6'-6"/5'-0" | W10 x 19<br>6'-6"/5'-0" | W10 x 19<br>6'-6"/5'-6" | W10 x 19<br>6'-6"/5'-6" | W10 x 19<br>6'-6"/5'-6" |
| 11'- 0" | | SEE NOTE 3 | | S6 x 17.25<br>5'-6"/4'-6" | S6 x 17.25<br>5'-6"/4'-6" | S8 x 18.4<br>6'-0"/4'-6" | S8 x 18.4<br>6'-0"/4'-9" | S8 x 18.4<br>6'-0"/4'-9" | S8 x 18.4<br>6'-0"/4'-9" | S8 x 18.4<br>6'-0"/5'-0" | W10 x 19<br>6'-6"/5'-0" | W10 x 19<br>6'-6"/5'-0" | W10 x 19<br>6'-6"/5'-6" | W10 x 22<br>6'-6"/5'-6" | W10 x 19<br>6'-6"/5'-6" | W10 x 22<br>7'-0"/5'-6" | W10 x 19<br>6'-6"/5'-6" | W10 x 22<br>7'-0"/5'-6" |
| 12'- 0" | | | | S6 x 17.25<br>5'-6"/4'-6" | S8 x 18.4<br>6'-0"/4'-6" | S8 x 18.4<br>6'-0"/4'-9" | S8 x 18.4<br>6'-0"/4'-9" | S8 x 18.4<br>6'-0"/4'-9" | W10 x 19<br>6'-6"/5'-0" | W10 x 19<br>6'-6"/5'-0" | W10 x 19<br>6'-6"/5'-0" | W10 x 19<br>6'-6"/5'-6" | W10 x 22<br>7'-0"/5'-6" | W10 x 22<br>7'-0"/5'-6" | W10 x 22<br>7'-0"/5'-6" | W10 x 22<br>7'-0"/5'-6" | W10 x 22<br>7'-0"/5'-6" | W10 x 22<br>7'-0"/5'-6" |
| 13'- 0" | | | | S8 x 18.4<br>6'-0"/4'-6" | S8 x 18.4<br>6'-0"/4'-9" | S8 x 18.4<br>6'-0"/4'-9" | S8 x 18.4<br>6'-6"/4'-9" | W10 x 19<br>6'-6"/5'-0" | W10 x 19<br>6'-6"/5'-0" | W10 x 19<br>6'-6"/5'-6" | W10 x 22<br>7'-0"/5'-6" | W10 x 22<br>7'-0"/5'-6" | W10 x 22<br>7'-0"/5'-6" | W10 x 26<br>7'-0"/5'-6" | W10 x 26<br>7'-0"/5'-6" | W10 x 26<br>7'-6"/5'-6" | W10 x 26<br>7'-0"/5'-6" | W10 x 26<br>7'-6"/5'-6" |
| 14'- 0" | | | | S8 x 18.4<br>6'-0"/4'-9" | S8 x 18.4<br>6'-0"/4'-9" | S8 x 18.4<br>6'-6"/4'-9" | W10 x 19<br>6'-6"/5'-0" | W10 x 19<br>6'-6"/5'-0" | W10 x 19<br>7'-0"/5'-6" | W10 x 22<br>7'-0"/5'-6" | W10 x 22<br>7'-0"/5'-6" | W10 x 22<br>7'-0"/5'-6" | W10 x 26<br>7'-6"/5'-6" | W10 x 26<br>7'-6"/6'-0" | W10 x 26<br>7'-6"/5'-6" | W10 x 30<br>7'-6"/6'-0" | W10 x 26<br>7'-6"/5'-6" | W10 x 30<br>7'-6"/6'-0" |
| 15'- 0" | | | | S8 x 18.4<br>6'-0"/4'-9" | S8 x 18.4<br>6'-6"/4'-9" | W10 x 19<br>6'-6"/5'-0" | W10 x 19<br>7'-0"/5'-0" | W10 x 22<br>7'-0"/5'-6" | W10 x 22<br>7'-0"/5'-6" | W10 x 22<br>7'-0"/5'-6" | W10 x 26<br>7'-6"/5'-6" | W10 x 26<br>7'-6"/5'-6" | W10 x 26<br>7'-6"/5'-6" | W10 x 30<br>7'-6"/6'-6" | W10 x 30<br>7'-6"/6'-0" | W10 x 30<br>8'-0"/6'-0" | W10 x 30<br>7'-6"/6'-0" | W10 x 30<br>8'-0"/6'-0" |
| 16'- 0" | | | | S8 x 18.4<br>6'-6"/5'-6" | W10 x 19<br>6'-6"/5'-6" | W10 x 19<br>7'-0"/6'-0" | W10 x 22<br>7'-0"/6'-0" | W10 x 22<br>7'-0"/6'-0" | W10 x 22<br>7'-6"/6'-0" | W10 x 26<br>7'-6"/6'-0" | W10 x 26<br>7'-6"/6'-0" | W10 x 30<br>7'-6"/6'-6" | W10 x 30<br>8'-0"/6'-6" | W10 x 30<br>8'-0"/6'-6" | W10 x 30<br>8'-0"/6'-6" | W10 x 39<br>8'-0"/6'-6" | W10 x 30<br>8'-0"/6'-6" | W10 x 39<br>8'-0"/6'-6" |
| 17'- 0" | | | | S8 x 18.4<br>6'-6"/5'-6" | W10 x 19<br>7'-0"/5'-6" | W10 x 19<br>7'-0"/6'-0" | W10 x 22<br>7'-0"/6'-0" | W10 x 22<br>7'-6"/6'-0" | W10 x 26<br>7'-6"/6'-0" | W10 x 26<br>7'-6"/6'-0" | W10 x 30<br>8'-0"/6'-6" | W10 x 30<br>8'-0"/6'-6" | W10 x 39<br>8'-0"/6'-6" | W10 x 39<br>8'-0"/6'-6" | W10 x 39<br>8'-0"/6'-6" | W10 x 39<br>8'-0"/6'-6" | W10 x 39<br>8'-0"/6'-6" | W10 x 39<br>8'-0"/6'-6" |
| 18'- 0" | | | | W10 x 19<br>7'-0"/5'-6" | W10 x 19<br>7'-0"/6'-0" | W10 x 22<br>7'-0"/6'-0" | W10 x 22<br>7'-6"/6'-0" | W10 x 26<br>7'-6"/6'-0" | W10 x 26<br>7'-6"/6'-0" | W10 x 30<br>8'-0"/6'-6" | W10 x 30<br>8'-0"/6'-6" | W10 x 39<br>8'-0"/6'-6" | W10 x 39<br>8'-6"/6'-6" | W10 x 39<br>8'-6"/6'-6" | W10 x 39<br>8'-6"/6'-6" | W10 x 39<br>8'-6"/6'-6" | W10 x 39<br>8'-6"/6'-6" | W10 x 39<br>8'-6"/6'-6" |
| 19'- 0" | | | | W10 x 19<br>7'-0"/5'-6" | W10 x 22<br>7'-0"/6'-0" | W10 x 22<br>7'-6"/6'-0" | W10 x 26<br>7'-6"/6'-0" | W10 x 26<br>8'-0"/6'-0" | W10 x 30<br>8'-0"/6'-6" | W10 x 39<br>8'-0"/6'-6" | W10 x 39<br>8'-6"/6'-6" | W10 x 39<br>8'-6"/6'-6" | W10 x 39<br>8'-6"/6'-6" | W10 x 45<br>8'-6"/7'-0" | W10 x 39<br>8'-6"/6'-6" | W10 x 45<br>8'-6"/7'-0" | W10 x 39<br>8'-6"/6'-6" | W10 x 45<br>8'-6"/7'-0" |
| 20'- 0" | | | | W10 x 19<br>7'-0"/6'-0" | W10 x 22<br>7'-6"/6'-0" | W10 x 26<br>7'-6"/6'-0" | W10 x 26<br>8'-0"/6'-0" | W10 x 30<br>8'-0"/6'-6" | W10 x 39<br>8'-0"/6'-6" | W10 x 39<br>8'-6"/6'-6" | W10 x 39<br>8'-6"/6'-6" | W10 x 39<br>8'-6"/6'-6" | W10 x 45<br>9'-0"/7'-0" | W10 x 45<br>9'-0"/7'-0" | W10 x 45<br>9'-0"/7'-0" | W10 x 45<br>9'-0"/7'-0" | W10 x 45<br>9'-0"/7'-0" | W10 x 45<br>9'-0"/7'-0" |
| 21'- 0" | | | | W10 x 22<br>7'-0"/6'-0" | W10 x 22<br>7'-6"/6'-0" | W10 x 26<br>8'-0"/6'-0" | W10 x 30<br>8'-0"/6'-6" | W10 x 39<br>8'-0"/6'-6" | W10 x 39<br>8'-6"/6'-6" | W10 x 39<br>8'-6"/6'-6" | W10 x 39<br>8'-6"/6'-6" | W10 x 45<br>9'-0"/7'-0" | W10 x 45<br>9'-0"/7'-0" | W10 x 49<br>9'-0"/7'-0" | W10 x 45<br>9'-0"/7'-0" | W10 x 49<br>9'-0"/7'-0" | W10 x 45<br>9'-0"/7'-0" | W10 x 49<br>9'-0"/7'-0" |
| 22'- 0" | | | | W10 x 22<br>7'-6"/6'-0" | W10 x 26<br>8'-0"/6'-0" | W10 x 30<br>8'-0"/6'-0" | W10 x 30<br>8'-0"/6'-6" | W10 x 39<br>8'-6"/6'-6" | W10 x 39<br>8'-6"/6'-6" | W10 x 39<br>9'-0"/7'-0" | W10 x 45<br>9'-0"/7'-0" | W10 x 45<br>9'-0"/7'-0" | W10 x 49<br>9'-6"/7'-0" | W10 x 49<br>9'-6"/7'-0" | W10 x 49<br>9'-6"/7'-0" | W10 x 49<br>9'-6"/7'-0" | W10 x 49<br>9'-6"/7'-0" | W10 x 49<br>9'-6"/7'-0" |

### TABLE KEY

TOP VALUE: PIPE DIAMETER (Ø) OR STRUCTURAL SHAPE

BOTTOM VALUE: MINIMUM FOUNDATION EMBEDMENT - SOFT OR LOOSE SOIL/MEDIUM SOIL

### SOIL CONDITIONS TABLE

| SOFT OR LOOSE SOIL | | MEDIUM SOIL | |
|---|---|---|---|
| COHESIVE | GRANULAR | COHESIVE | GRANULAR |
| MOIST UNIT WEIGHT = 110 PCF<br>COHESION (C) = 750 PSF<br>STRAIN FACTOR (E50) = 0.01<br>SOIL MODULUS (K) = 100 PCI | UNIT WEIGHT = 115 PCF<br>SHEAR STRENGTH = 30°<br>SOIL MODULUS (K) = 50 PCI | MOIST UNIT WEIGHT = 125 PCF<br>COHESION (C) = 1,500 PSF<br>STRAIN FACTOR (E50) = 0.007<br>SOIL MODULUS (K) = 500 PCI | UNIT WEIGHT = 125 PCF<br>SHEAR STRENGTH = 34°<br>SOIL MODULUS (K) = 90 PCI |

**NOTES:**

1. SEE STD DWG SN 15B1 FOR GENERAL NOTES.
2. USE THE HIGHER VALUES WHEN SIGN HEIGHT OR WIDTH FALLS BETWEEN TWO VALUES.
3. USE OF Z-BAR IS PERMITTED FOR SIGN APPLICATIONS WITHIN DASHED LINE AREA, SEE STD DWG SN 8. DO NOT USE Z-BAR FOR MULTIPANEL SIGN APPLICATIONS.
4. USE EMBEDMENT VALUES FOR SOFT OR LOOSE SOIL CONDITIONS UNLESS OTHERWISE SHOWN.

**DESIGN-ONLY NOTES:**

A. USE EMBEDMENTS FOR SOFT OR LOOSE SOIL CONDITIONS UNLESS GEOTECHNICAL ENGINEER RECOMMENDS THAT THE SITE MEETS OR EXCEEDS THE MEDIUM SOIL CONDITIONS.

SUPPLEMENTAL DRAWING

REVISIONS

| NO. | DATE | APPR. | REMARKS |
|---|---|---|---|
| 1 | 8/31/17 | CGW | ADDED MISSING NOTE 3 REFERENCE TO TABLE |

UTAH DEPARTMENT OF TRANSPORTATION
STANDARD DRAWINGS FOR ROAD AND BRIDGE CONSTRUCTION
SALT LAKE CITY, UTAH

RECOMMENDED FOR APPROVAL — AUG. 31, 2017 DATE
CHAIRMAN STANDARDS COMMITTEE APPROVED — AUG. 31, 2017 DATE
DEPUTY DIRECTOR

STANDARD DRAWING TITLE: FREEWAY SIGN POST AND FOUNDATION REQUIREMENTS

STD. DWG. NO. SN 15B2

DGN File: O:\StandardsandSpecsSection\2017Section\All Supp Issues\Issue # 2 08-31-2017\Drawings\SN15B2.dgn
EP-2017

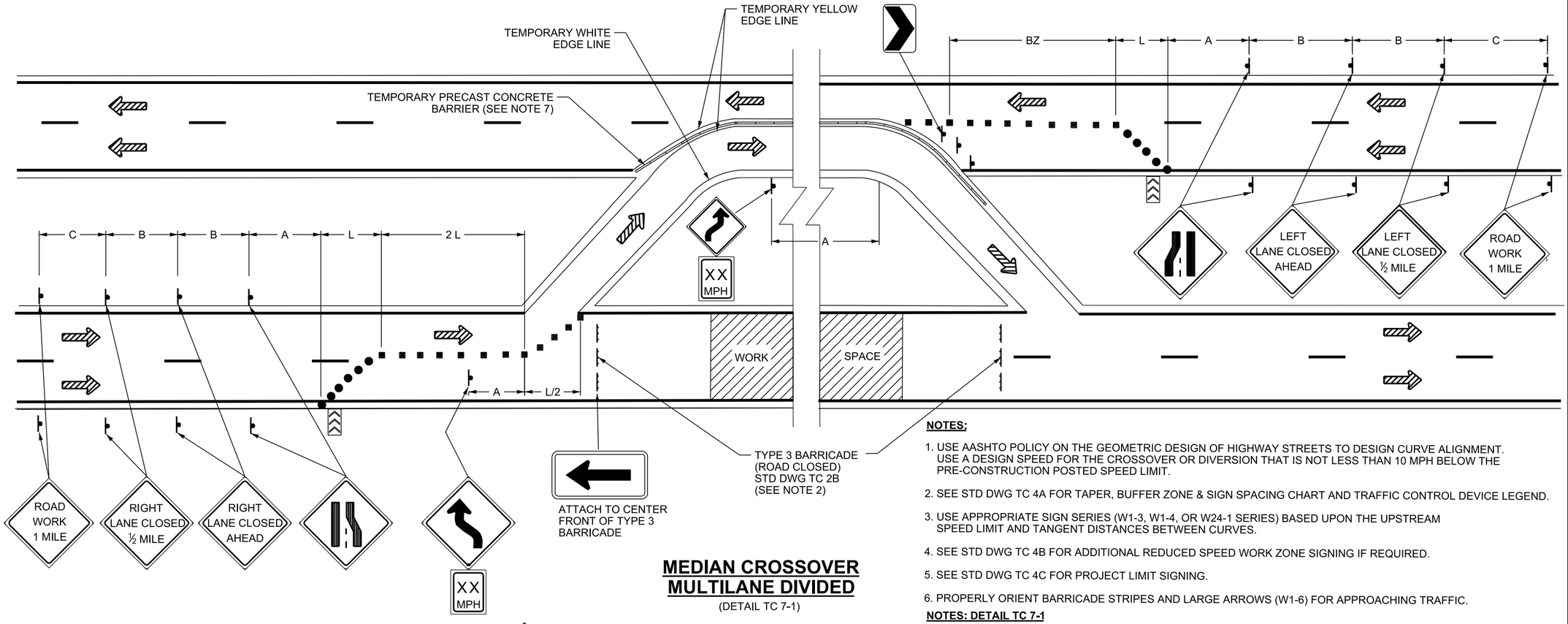


## MEDIAN CROSSOVER MULTILANE DIVIDED

(DETAIL TC 7-1)

**NOTES:**

1. USE AASHTO POLICY ON THE GEOMETRIC DESIGN OF HIGHWAY STREETS TO DESIGN CURVE ALIGNMENT. USE A DESIGN SPEED FOR THE CROSSOVER OR DIVERSION THAT IS NOT LESS THAN 10 MPH BELOW THE PRE-CONSTRUCTION POSTED SPEED LIMIT.
2. SEE STD DWG TC 4A FOR TAPER, BUFFER ZONE & SIGN SPACING CHART AND TRAFFIC CONTROL DEVICE LEGEND.
3. USE APPROPRIATE SIGN SERIES (W1-3, W1-4, OR W24-1 SERIES) BASED UPON THE UPSTREAM SPEED LIMIT AND TANGENT DISTANCES BETWEEN CURVES.
4. SEE STD DWG TC 4B FOR ADDITIONAL REDUCED SPEED WORK ZONE SIGNING IF REQUIRED.
5. SEE STD DWG TC 4C FOR PROJECT LIMIT SIGNING.
6. PROPERLY ORIENT BARRICADE STRIPES AND LARGE ARROWS (W1-6) FOR APPROACHING TRAFFIC.

**NOTES: DETAIL TC 7-1**

7. SEE STD DWG TC 1 GENERAL NOTES 19 AND 20 FOR TEMPORARY PRECAST BARRIER REQUIREMENTS.

**NOTES: DETAIL TC 7-2**

8. USE CHANNELIZING DEVICES ON UNPAVED SURFACES.
9. PROVIDE A MINIMUM 10 FT TRAFFIC LANE IN EACH DIRECTION. USE A FLAGGING OPERATION AS ACCORDING TO STD DWG TC 14 IF THIS CANNOT BE DONE.
10. PLACE PASS WITH CARE (R4-2) SIGN ONLY IF PASSING IS ALLOWED DOWNSTREAM OF WORK ZONE

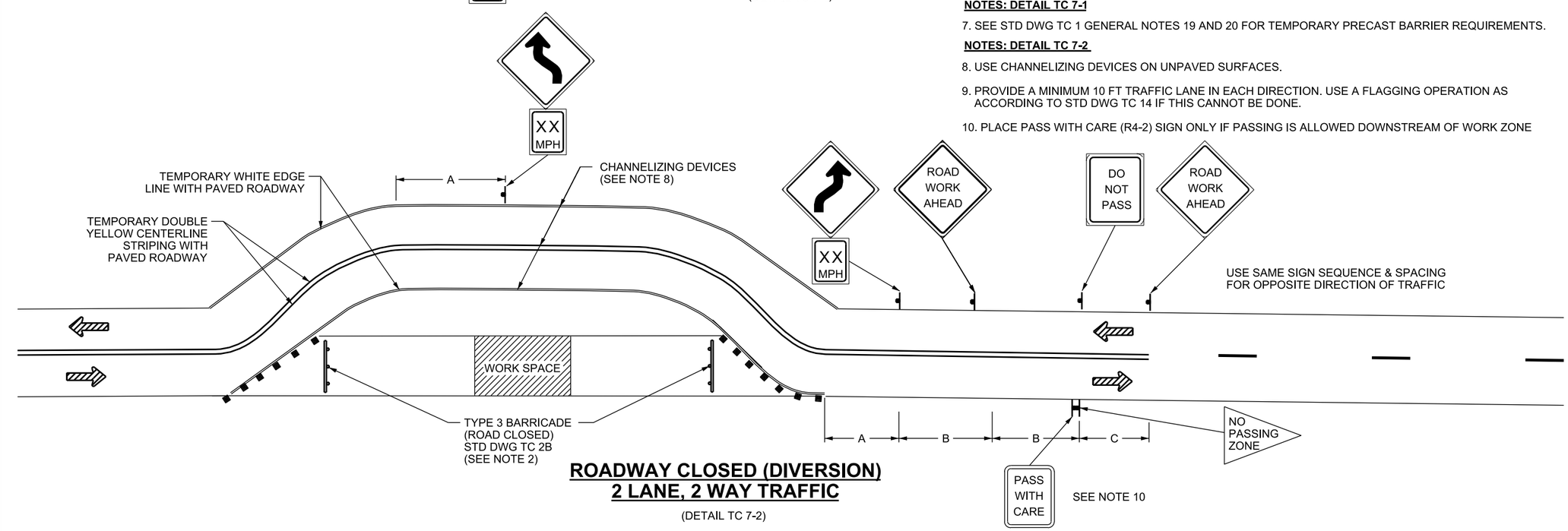


## ROADWAY CLOSED (DIVERSION) 2 LANE, 2 WAY TRAFFIC

(DETAIL TC 7-2)

| NO. | DATE | APPR. | REMARKS |
|---|---|---|---|
| | | | |

REVISIONS

**UTAH DEPARTMENT OF TRANSPORTATION**

STANDARD DRAWINGS FOR ROAD AND BRIDGE CONSTRUCTION

SALT LAKE CITY, UTAH

RECOMMENDED FOR APPROVAL — AUG.31, 2017 DATE

CHAIRMAN STANDARDS COMMITTEE APPROVED — AUG.31, 2017 DATE

DEPUTY DIRECTOR

MEDIAN CROSSOVER AND 2-LANE, 2-WAY DIVERSION

STANDARD DRAWING TITLE

STD. DWG. NO.

TC 7

DGN File: D:\StandardsandSpecs\Section\2017Section\All Supp Issues\Issue # 2 08-31-2017\Drawings\TC07.dgn

12-SEP-2017

# Supplemental Issue,
# October 26, 2017

## Supplemental Specifications

| | |
|---|---|
| 00555M | Prosecution and Progress |
| 00570M | Definitions |
| 00725M | Scope of Work |
| 00777M | Change Management |
| 01554M | Traffic Control |
| 01601 | Railroad Company Coordination **(New Specification)** |

## Supplemental Drawings

| | |
|---|---|
| AT10A | CCTV Mounting Detail and Wiring Diagram |
| BA 4A | Midwest 31 Inch W-Beam Guardrail Hardware |
| BA 4B1 | W-Beam Guardrail Transition Hardware |
| BA 4B2 | W-Beam Guardrail Transition Layouts Approach End and Midwest 31 Inch Guardrail Trailing End |
| BA 4B4 | Midwest 31 Inch W-Beam Guardrail Median Barrier and Transition Hardware and Layout |
| BA 4C1 | 31 Inch W-Beam Guardrail Anchor Type 1 **(DELETION. Renumbered to BA 4G2)** |
| BA 4C1A | Midwest 31 Inch W-Beam Guardrail Anchor Type 1 **(NEW DRAWING)** |
| BA 4C1B | Midwest 31 Inch W-Beam Guardrail Anchor Type 1 **(NEW DRAWING)** |
| BA 4D1 | Midwest 31 Inch W-Beam Guardrail Installations |
| BA 4D2 | Midwest 31 Inch W-Beam Guardrail Installations |
| BA 4F1 | W-Beam Guardrail Hardware 31 Inch Buried in Backslope Terminal |
| BA 4F3 | W-Beam Guardrail Buried in Backslope Terminal Anchor |
| BA 4G | W-Beam Guardrail Curve Breakaway Details **(DELETION. Renumbered to BA 4G1)** |
| BA 4G1 | W-Beam Guardrail Curve Breakaway Details **(NEW NUMBER. Was BA 4G)** |
| BA 4G2 | Curved Guardrail Anchor **(TITLE CHANGE. NEW NUMBER. Was BA 4C1)** |
| BA 4J1 | Midwest 31 Inch W-Beam Guardrail Typicals Divided Roadways |
| BA 4J2 | Midwest 31 Inch W-Beam Guardrail Typical Multilane Arterial |
| CC 8A | Grading and Installation Details Softstop End Treatment Type G (MASH) |
| CC 8B | Grading and Installation Details MSKT-SP-MGS End Treatment Type G (MASH) |
| CC 8C | Grading and Installation Details For “3R” Projects End Treatment Type G |
| CC 9 | Grading and Installation Details SRT M10 End Treatment Type H (MASH) **(DELETION)** |
| PV 01 | Joints for Highways with Concrete Traffic Lanes and Shoulders |
| PV 02 | Pavement Approach Slab Details **(DELETION)** |
| PV 03 | Concrete Pavement Details (1 of 2) **(DELETION. Renumbered to PV 02)** |
| PV 04 | Concrete Pavement Details (2 of 2) **(DELETION. Renumbered to PV 03)** |

**Supplemental Specification**
**2017 Standard Specification Book**

**SECTION 00555M**

# PROSECUTION AND PROGRESS

**Delete Article 1.13 and replace with the following:**

## 1.13 WORK SUSPENSIONS

A. The Engineer may give written notice to suspend all or any portion of work for any reason at any time during the contract for the mutual benefit of the Department and the Contractor.
   1. Submit a request to the Engineer for a contract adjustment for suspensions or delays considered anomalous.
      a. Submit the request within seven calendar days of the notice to resume work.
      b. Contract adjustment is made only for requests submitted within the established time frame.
   2. The Department does not allow adjustments to the contract to the extent that performance would have been suspended or delayed by any other cause or for which an adjustment is provided for or excluded under any other contract term or condition.
   3. Time charges will not accrue during work suspensions.
   4. Contract adjustment is made as specified in Section 00777 if both parties agree that the suspension:
      a. Increased the cost or time required for the performance of the contract.
      b. Resulted from conditions beyond control of the Department or the Contractor.
      c. Was not caused by normal weather.
      d. Was not due to failure to correct conditions unsafe for the workers or the general public

B. Contractor may pursue a claim for additional compensation or contract adjustment if there is disagreement with this Article.

C. Maintain Traffic during a suspension
   1. Prepare the project for traffic flow during anticipated work suspensions.
   2. Maintain all required traffic control devices.
   3. The Department performs snow removal activities on temporary roadways and portions of the project during work suspensions.
   4. Repair or replace all work or materials lost or damaged during the suspension.

5. Remove work or materials used for temporary maintenance and complete the project as though the work had been continuous and without interference.
6. The Department pays for maintenance required by events beyond control during work suspensions at contract prices or as extra work.

**Delete Article 1.14 and replace with the following:**

## 1.14 STOP WORK ORDERS

A. Stop Work Order:
   1. The Engineer has the authority to stop work on a project, wholly or in part, when it is determined that the Contractor does not:
      a. Correct conditions unsafe for the project personnel or the public.
      b. Perform work properly or comply with contract provisions.
      c. Comply with the Engineer's orders.
   2. The Engineer will provide a written Stop Work Order, within 24 hours of verbal notification, that describes the reason for ordering work to stop and what actions need to be taken or how conditions need to change before work may resume.
   3. The Engineer will notify the Contractor when to resume work.
   4. Time charges will continue to accrue during periods of stopped work.

B. Work may be stopped for any of the following reasons:
   1. Contractor's failure to comply with the contract.
   2. Contractor's failure to keep insurance coverage according to Section 00820
   3. Contractor's failure to provide workers or equipment
   4. Work is being performed when unsuitable weather or soil conditions exist that are detrimental to the quality of the finished product
   5. Conditions exist that threaten the safety of the workers, public or nearby property.

**Supplemental Specification**
**2017 Standard Specification Book**

**SECTION 00570M**

# DEFINITIONS

**Delete Article 1.7, Paragraph 88 through 94 and replace with the following:**

88. **Unusually Severe Weather** – Adverse weather (such as unusually heavy rain or snow, or unusually high or low temperatures) which at the time of year in which it occurred is unusual for the project site, and is more severe than any that might be anticipated for the project location during the period of expected performance as compared to the averages as reported by the Prism Climate Group
89. **Utility** – All privately, publicly, or cooperatively owned lines, facilities, and systems for producing, transmitting, or distributing communications, power, heat, gas, oil, water, waste, and storm water not connected with the highway drainage, signal systems, and other products that directly or indirectly serve the public.
90. **Value Engineering Change Proposal** – A change proposed by the Contractor and considered by the Department intended to result in project cost savings to contract pay items without reducing the essential functions and characteristics of the project. Refer to Section 00725.
91. **Well-Graded Material** – Material having an even distribution of different particle sizes. This even distribution of particles of different sizes results in a dense mass upon compaction.
92. **Work** – The elements, activities, and incidentals necessary to complete a project (including labor, materials, equipment, and the interim products and stages attained in the course of reaching completion), and all alterations, amendments, or extensions made by change order or other written orders of the Engineer.

93. **Working Day** – Any calendar day, except:
    a. Contract designated holidays or days restricted in the contract.
    b. Days when the Contractor is specifically required by the contract or letter from the Engineer to suspend operations through no fault of the Contractor.
    c. Days when the Engineer determines that inclement weather or adverse conditions interfere with the progress of the work.
        1) When the Engineer determines that inclement weather prevents the Contractor from working for at least 50 percent of the normal working day.
        2) The day may be considered a working day exception even though conditions may improve and the major portion of the day could be considered suitable for operations if weather stops the Contractor's crew from beginning work at the normal starting hour and the crew is released as a result.
    d. Submittals and notification requirements are based on a standard 5 day work week.
94. **Working Drawings** – Drawings produced by the Contractor that supplement the contract drawings to provide information not included in the contract documents but that is required to fabricate, erect, transport, or temporarily support the structure or structural elements in the completion of the work. Working drawings do not supersede the contract drawings.
95. **Written Permission of the Engineer** – A letter signed by the Engineer granting specific permission and outlining limitations of the permission.

**Supplemental Specification**
**2017 Standard Specification Book**

**SECTION 00725M**

# SCOPE OF WORK

**Delete Article 1.10 and 1.11 and replace with the following:**

## 1.10 CONSTRUCTION OVER OR ADJACENT TO NAVIGABLE WATERS

A. Do not interfere with the navigation of waterways when conducting work over, on, or adjacent to navigable waters.

B. Comply with all conditions of permits from the U.S. Coast Guard or the U.S. Army Corps of Engineers.

**Supplemental Specification**
**2017 Standard Specification Book**

**SECTION 00777M**

# CHANGE MANAGEMENT

**Add the following to Article 1.12:**

E. Unusually Severe Weather

1. A delay due to unusually severe weather may be considered a non-compensable delay when the Contractor provides documentation that the weather conditions:
   a. Were unusually severe for the project site and the affected time period;
   b. Could not reasonably have been anticipated; and
   c. Had an adverse effect on the scheduled construction.

2. Demonstrate that the severity or the number of days of unusually severe weather at the project location warrants entitlement to a time extension.
   a. Establish that weather was unusually severe by comparing weather data (such as precipitation, temperature, or snowfall) for the affected time period with historical weather data for the same time period.
      1) Refer to the Daily Values at the Prism Climate Group website to download historical temperature and precipitation values for the project location. Refer to http://www.udot.utah.gov/go/standardsreferences
3. Use historical weather data from at least the previous 5 years and no more than 10 years to:
   a. Demonstrate that the unusually severe weather experienced at the project site limited the ability to perform work.
   b. Demonstrate that the work was on the project's critical path and that the critical path was affected.
      1) Non-critical path work will not be considered for unusually severe weather.

**Supplemental Specification**
**2017 Standard Specification Book**

**SECTION 01554M**

# TRAFFIC CONTROL

**Delete Article 2.2, Paragraph C1a and replace with the following:**

a. Wear safety apparel meeting the requirements of ANSI/ISEA "American National Standard for High-Visibility Apparel and Headwear" or equivalent revisions and labeled as meeting the current ANSI/ISEA publication year, standard performance for Class 3 risk exposure.

**Add Article 3.9:**

**3.9 LANE CLOSURES**

A. Notify the Engineer in advance of every lane closure.
   1. Provide notification:
      a. As soon as it is known that a lane closure is necessary to execute the work, but not less than 72 hours before the closure begins.
      b. As soon as practical when the schedule, location, or need for an upcoming lane closure arises or changes.
         1) Contact the Engineer immediately in person, by email, by phone call, or by text message.
   2. Include at least the following:
      a. The route,
      b. The beginning and ending mileposts or mile markers,
      c. Number of lanes to be closed,
      d. Direction of the closure,
      e. The date and time of the beginning of closure, and
      f. The date and time of the ending of the closure.

B. Coordinate lane closures with the Engineer (or designee) at least 72 hours before each closure to allow for Department entry into the UDOT Traffic Lane Closure system via the UDOT Traffic website

C. Provide real-time confirmation of every lane closure on the state routes listed in Table 1, and subsequent lane reopening, using the UDOT Lane Closure mobile application. (Use an iOS or Android smartphone; download instructions for the mobile application will be provided by UDOT.)

1. Begin Lane Closure: Confirm lane closure details 30 to 45 minutes before placing the first traffic control device in the travel lane.
   a. Mobile application will generate a confirmation of the upcoming closure 45 minutes before the scheduled start time; the Contractor accepts the confirmation to activate the lane closure, or cancels or reschedules the lane closure as needed.
2. End Lane Closure: Confirm lane reopening 30 to 45 minutes before removing the last traffic control device in the lane.
   a. Mobile application will generate a confirmation 45 minutes before the scheduled expiration of lane closure; the Contractor accepts the confirmation to confirm the scheduled end time, or extends the closure as needed.
3. Call the TOC at (801) 887-3700 and provide information to activate, modify, or delete lane closure in the UDOT Traffic Lane Closure system in the event the mobile application is not working or is unavailable.
   a. Make this call 30 to 45 minutes before placing the first device in the travel lane, and 30 to 45 minutes before reopening the lane.

Table 1

| State Routes Requiring Real Time Lane Closure Confirmation |
|---|
| All interstates (I-15, I-70, I-80, I-84, I-215) |
| US-6 (East of I-15) |
| SR-30 (I-15 to Logan) |
| SR-36 (I-80 to Tooele) |
| SR-67 |
| SR-85 |
| SR-154 |
| SR-201 |
| SR-224 |
| SR-248 |
| US-40 |
| US-89 (Davis, Weber, Cache, Rich and Box Elder Counties) |
| US-91 (I-15 to Logan) |
| US-189 |
| US-191 (Moab to I-70) |

**Supplemental Specification**
**2017 Standard Specification Book**

**SECTION 01601**

# RAILROAD COMPANY COORDINATION

**Add Section 01601:**

## PART 1 GENERAL

### 1.1 SECTION INCLUDES

A. Coordination with railroad companies and estimated flagging rates.

### 1.2 RELATED SECTIONS Not Used

### 1.3 REFERENCES Not Used

### 1.4 DEFINITIONS Not Used

### 1.5 SUBMITTALS

A. Provide a copy of the executed Contractor's Right of Entry agreement.

### 1.6 RAILROAD – HIGHWAY PROVISIONS

A. The Department coordinates with the Railroad Company for new crossings or for existing crossings within the limits of the work.

B. Determine the required cost of, including but not limited to, railroad flagging, inspection, and cleanup crews.
   1. Use Table 1 to estimate flagging charges:

Table1

| Estimated Railroad Flagging Rates | | |
|---|---|---|
| On Site Hours | Total Billable Hours * | Total Cost |
| 4 hours flagging | 8 total hours* | $776 |
| 8 hours flagging | 12 total hours* | $1,290 |
| 10 hours flagging | 14 total hours* | $1,547 |
| 12 hours flagging | 16 total hours* | $1,805 |
| * The Total Billable Hours column includes an additional 4 hours for set up and take down. | | |

2. The Department deducts for cost including, but not limited to, railroad flagging (if performed by the Railroad Company), inspection, and cleanup. The Department pays the Railroad Company directly for verified billings.

C. Execute a Contractor's Right of Entry Agreement with the Railroad Company before performing work within the railroad right-of-way.
   1. Obtain insurance required under the Contractor's Right of Entry Agreement.

D. Hold a pre-activity meeting at least 30 days before beginning construction work on railroad right-of-way and give written notice to the Manager of Industry and Public Projects or equivalent position for the Railroad Company. Coordinate a work schedule based on the actual date both parties can begin work. Refer to contract documents for names of Railroad Companies.
   1. The Railroad Company will notify the Department at the pre-activity meeting whether railroad flagging will be performed by the Railroad Company or the Contractor should subcontract with an approved third party flagging company. The list of approved third party flagging companies will be provided by the Railroad Company.

E. Give at least 48 hours verbal notice to the Manager of Track Maintenance or equivalent position for the Railroad Company responsible for the area the project is in before beginning work.

**PART 2 PRODUCTS Not Used**

**PART 3 EXECUTION Not Used**

END OF SECTION

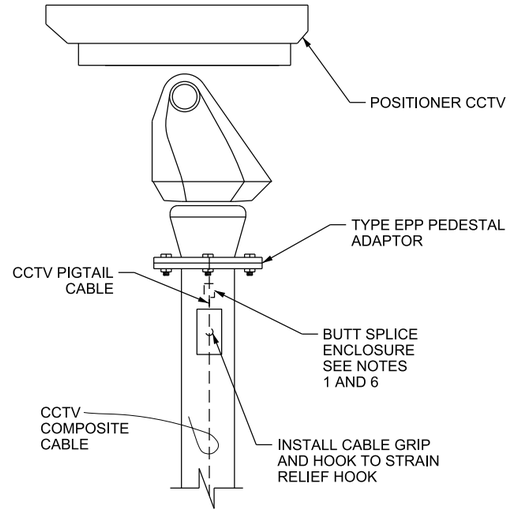


## (A) MOUNTING DETAIL PEDESTAL MOUNTED POSITIONER CCTV (ESPRIT)

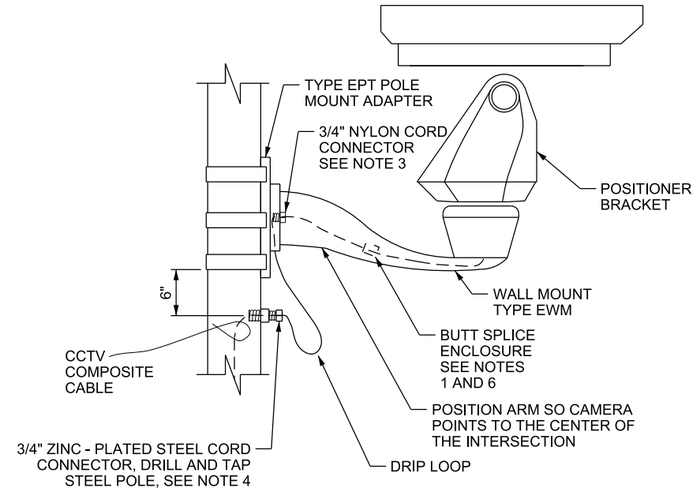


## (B) MOUNTING DETAIL POLE MOUNTED POSITIONER CCTV (ESPRIT)

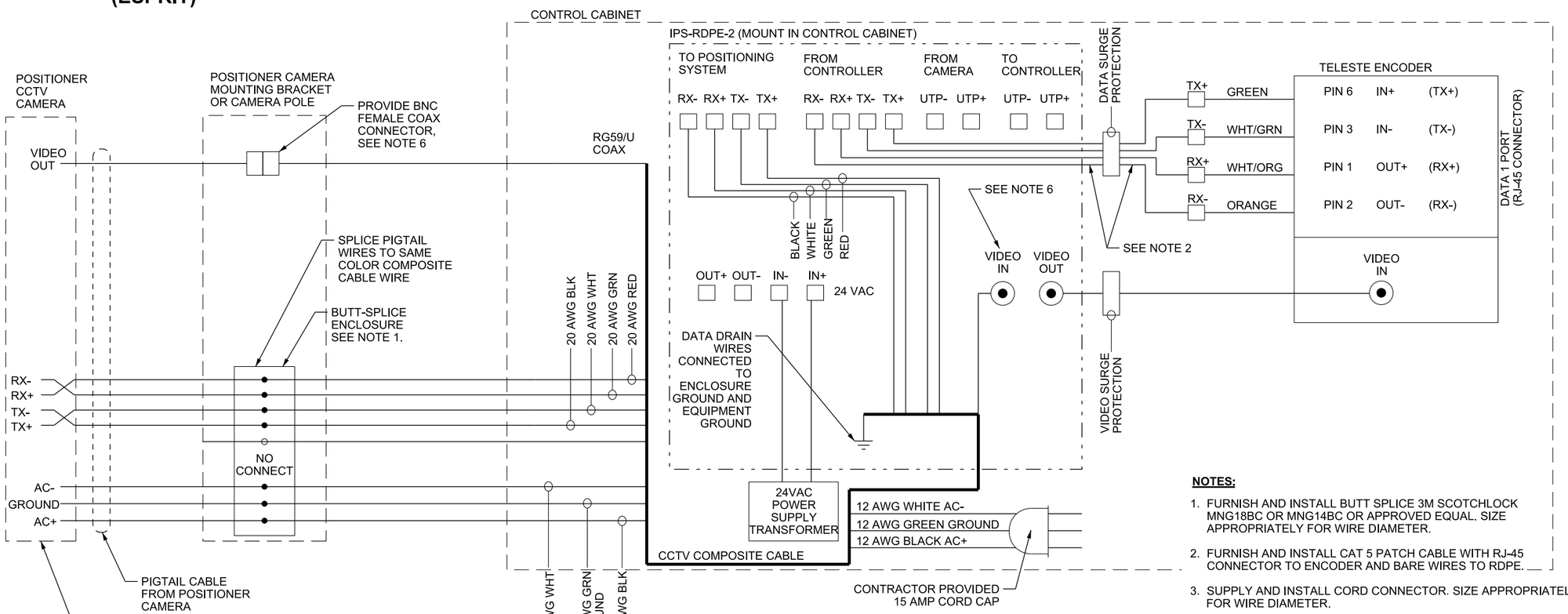


## WIRING DIAGRAM POSITIONER CAMERA (ESPRIT)

**NOTES:**

1. FURNISH AND INSTALL BUTT SPLICE 3M SCOTCHLOCK MNG18BC OR MNG14BC OR APPROVED EQUAL. SIZE APPROPRIATELY FOR WIRE DIAMETER.
2. FURNISH AND INSTALL CAT 5 PATCH CABLE WITH RJ-45 CONNECTOR TO ENCODER AND BARE WIRES TO RDPE.
3. SUPPLY AND INSTALL CORD CONNECTOR. SIZE APPROPRIATELY FOR WIRE DIAMETER.
4. SUPPLY AND INSTALL LIQUID TIGHT CORD CONNECTOR. SIZE APPROPRIATELY FOR WIRE DIAMETER.
5. DO NOT USE CORD CONNECTORS SUPPLIED WITH CAMERA.
6. USE BNC CRIMP ON CONNECTORS FOR ALL RJ59 VIDEO CABLE CONNECTORS.

SUPPLEMENTAL DRAWING

| NO. | DATE | APPR. | REMARKS |
|---|---|---|---|
| 1 | 10/26/17 | MMA | MODIFIED DETAIL B. MODIFIED NOTE 3. ADDED NOTES 4, 5, AND 6. ADDED NOTE CALL OUTS. |

**UTAH DEPARTMENT OF TRANSPORTATION**
STANDARD DRAWINGS FOR ROAD AND BRIDGE CONSTRUCTION
SALT LAKE CITY, UTAH

RECOMMENDED FOR APPROVAL — OCT. 26, 2017 DATE
CHAIRMAN STANDARDS COMMITTEE APPROVED — OCT. 26, 2017 DATE
DEPUTY DIRECTOR

STANDARD DRAWING TITLE: CCTV MOUNTING DETAIL AND WIRING DIAGRAM

STD. DWG. NO. AT 10A

DGN File:Q:\Standards\SpecSection\2017Section\All Supp Issues\Issue # 3 10-26-2017\Drawings\AT10A.dgn
07-NOV-2017

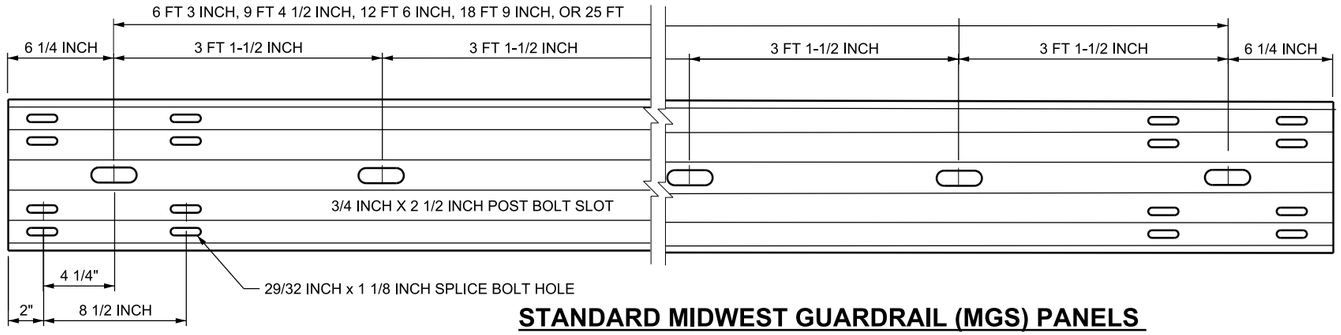


## STANDARD MIDWEST GUARDRAIL (MGS) PANELS

SEE NOTES 6 & 7

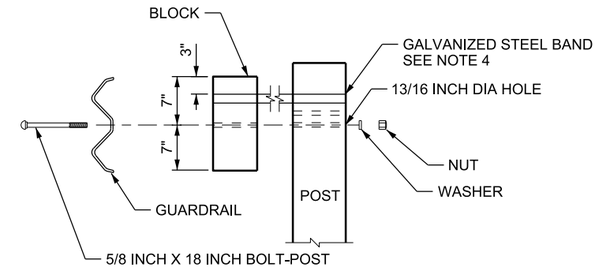


## WOOD POST TO RAIL TYPICAL

USE BOTTOM HOLE FOR INITIAL INSTALLATION
SEE NOTES 1, 3 & 4

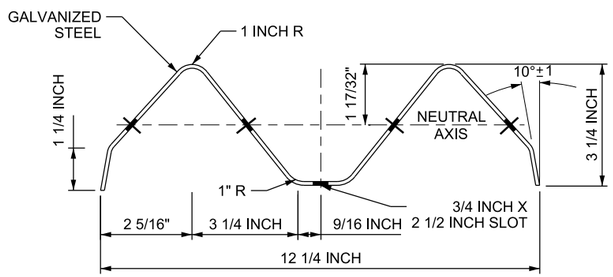


## SECTION THRU RAIL ELEMENT

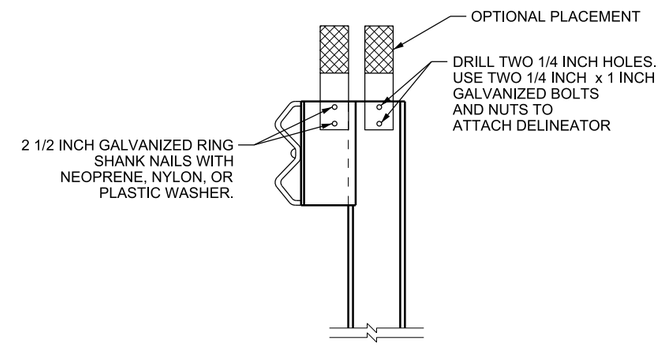


## DELINEATOR DETAIL

STEEL POST W/WOOD
OR COMPOSITE BLOCK

SEE STD DWG GW 6B FOR HARDWARE
AND GW 7A FOR PLACEMENT

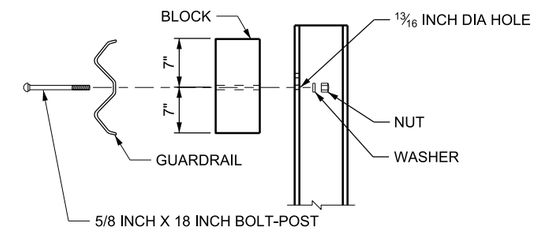


## STEEL POST TO RAIL TYPICAL

SEE NOTES 1 & 3

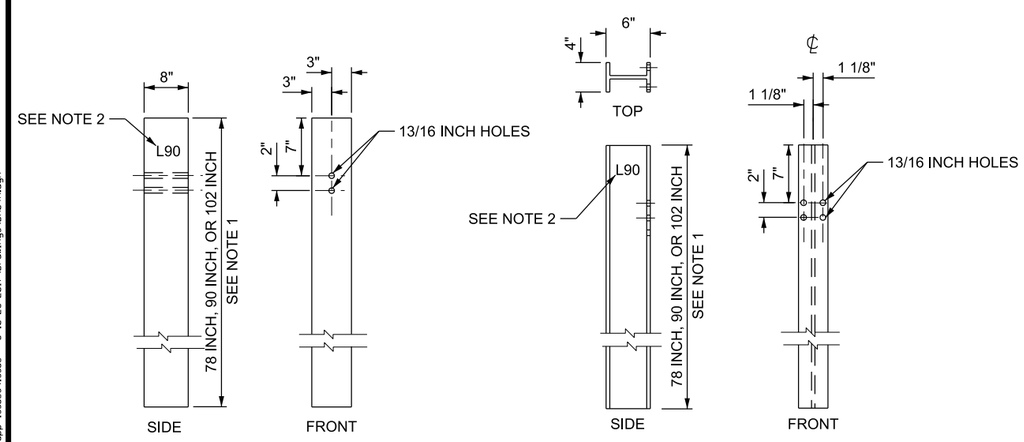


## 6 INCH X 8 INCH WOOD POST

## W6 X 8.5 STEEL POST

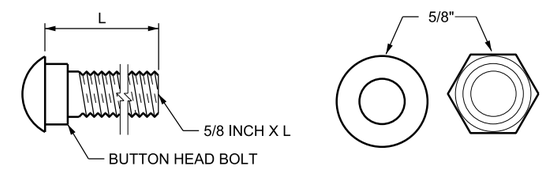


## GALVANIZED BOLTS, NUTS, WASHERS

| | L |
|---|---|
| SPLICE BOLTS (WASHER NOT REQ'D.) | 1 1/4 INCH |
| STEEL BOLT W/ WOOD BLOCK | 10 INCH |
| WOOD POST W/ WOOD BLOCK | 18 INCH |
| WOOD POST W/ WOOD BLOCK (MEDIAN) | 25 INCH |

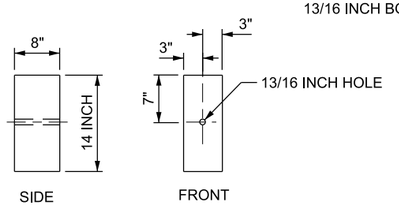


## 6 INCH X 8 INCH WOOD BLOCK

SEE NOTE 4

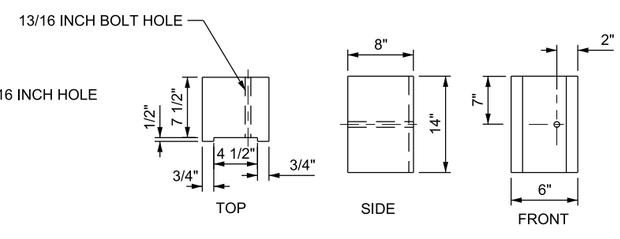


## 6 INCH X 8 INCH NOTCHED WOOD BLOCK

SEE NOTE 5

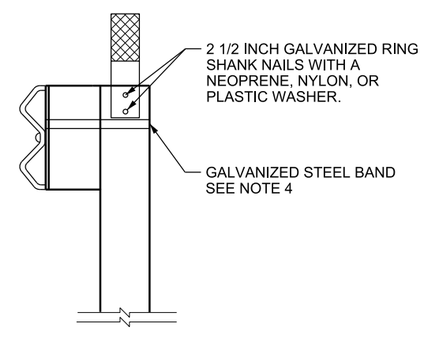


## DELINEATOR DETAIL

WOOD POST W/WOOD BLOCK

SEE STD DWG GW 9 FOR HARDWARE
AND GW 10 FOR PLACEMENT

**NOTES:**

1. SEE INSTALLATION DETAIL STD DWG BA 4D1 OR BA 4D2 FOR POST LENGTH REQUIREMENTS AND HOLE USAGE REQUIREMENT.
2. 90 AND 102 INCH POST MARKING: WOOD POST, BRAND POST WITH 1 1/2 INCH x 2 INCH MARKING L90 OR L102, STEEL POST STAMP POST WITH 1 1/2 INCH x 2 INCH MARKING L90 OR L102. BRANDING OR STAMPING REQUIRED PRIOR TO INSTALLATION OF POSTS. DO NOT BRAND THE STANDARD LENGTH 78 INCH POST.
3. DO NOT USE WASHERS ON RAIL FACE OR SPLICE CONNECTION.
4. BAND WOOD BLOCKS TO WOOD POSTS WITH 1/2 INCH STEEL GALVANIZED OR STAINLESS STEEL BAND. BANDING NOT REQUIRED WITH STEEL POSTS AND WOOD OR COMPOSITE BLOCKS.
5. A COMPOSITE OR PLASTIC BLOCK CAN BE SUBSTITUTED FOR THE NOTCHED WOOD BLOCK ON STEEL POST INSTALLATION. MASH COMPLIANCE REQUIRED.
6. MANUFACTURE ACCORDING TO AASHTO GUIDE TO STANDARDIZED HIGHWAY BARRIER HARDWARE.

SUPPLEMENTAL DRAWING

REVISIONS

| NO. | DATE | APPR. | REMARKS |
|---|---|---|---|
| 1 | 10/26/2017 | SDD | MODIFIED SLOT DIMENSION TO MEET AASHTO M-180. MODIFIED MGS PANEL. DELETED NOTE 7. |

UTAH DEPARTMENT OF TRANSPORTATION
STANDARD DRAWINGS FOR ROAD AND BRIDGE CONSTRUCTION
SALT LAKE CITY, UTAH

RECOMMENDED FOR APPROVAL — OCT 26, 2017 DATE
CHAIRMAN STANDARDS COMMITTEE APPROVED — OCT 26, 2017 DATE
DEPUTY DIRECTOR

MIDWEST 31 INCH W-BEAM GUARDRAIL HARDWARE

STANDARD DRAWING TITLE

STD. DWG. NO.
BA 4A

DGN File: D:\Standards\Specs\Section\2017Section\All Supp Issues\Issue # 3 10-26-2017\Drawings\BA04A.dgn
07-NOV-2017

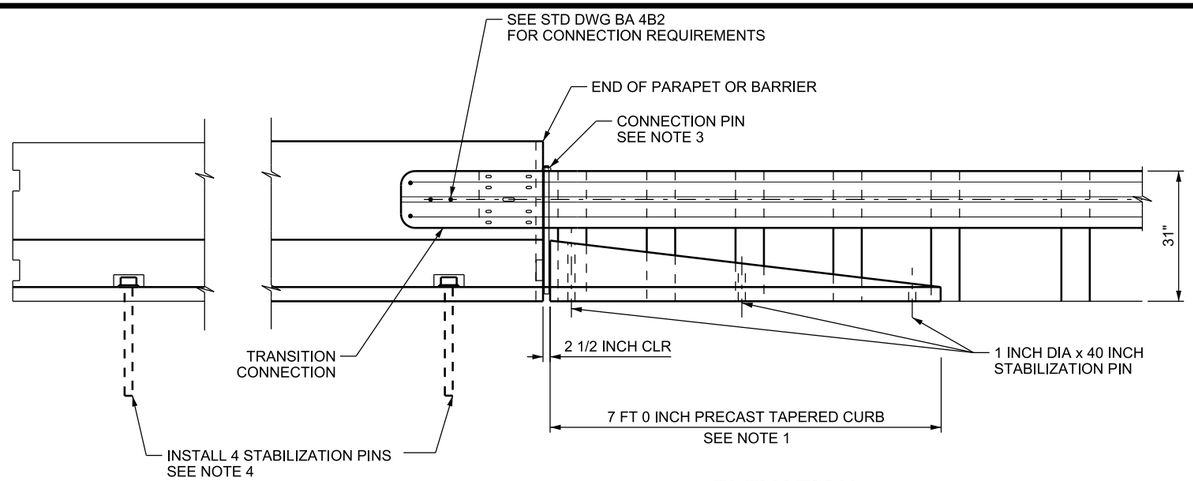


## ELEVATION

RIGHT SIDE SHOWN LEFT SIDE SIMILAR

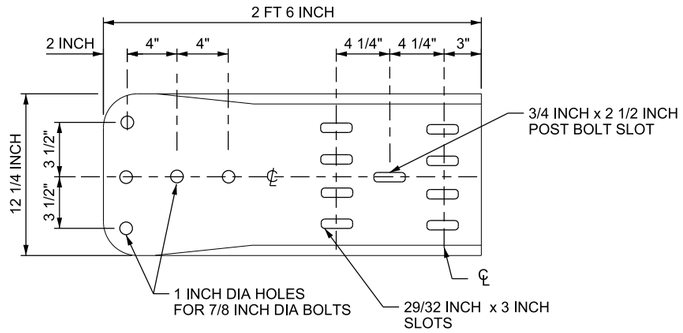


## TERMINAL CONNECTOR PLATE

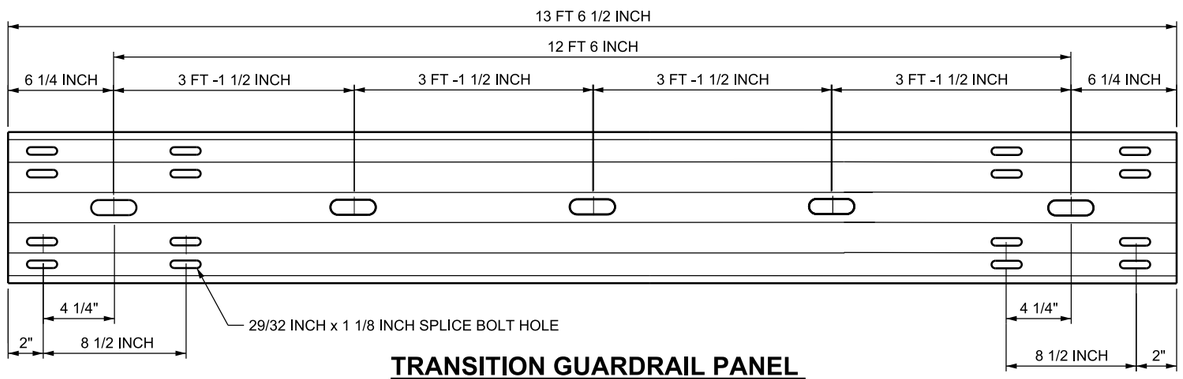


## TRANSITION GUARDRAIL PANEL

4- SPACE W-BEAM GUARDRAIL
SEE NOTE 7

**WOOD POST OPTION**

POST # 1 & # 2
POSTS 10 INCH x 10 INCH x 8 FT
BLOCKS 10 INCH x 10 INCH x 14 INCH
POSTS # 3 THROUGH # 11
TYPICAL WOOD POSTS
AND BLOCKS
(SEE STD DWG BA 4A)

**STEEL POST OPTION**

POSTS # 1 & # 2
W8 x 21 x 8 FT
BLOCKS 6 INCH x 8 INCH x 14 INCH
POSTS # 3 THROUGH # 11
TYPICAL STEEL POSTS
AND BLOCKS
(SEE STD DWG BA 4A)

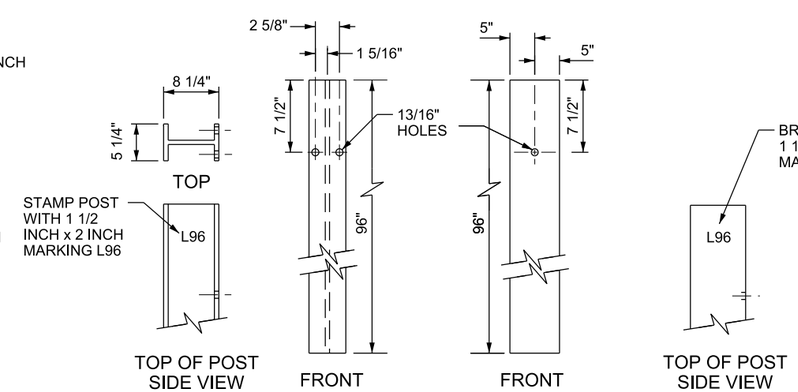


## STEEL POST

## WOOD POST

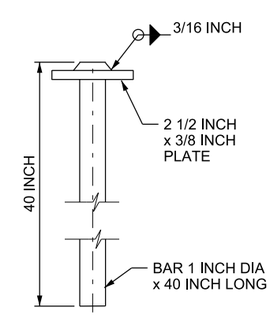


## STABILIZATION PIN

SEE NOTE 5

## POSTS # 1 AND # 2 OPTIONS

SEE NOTE 8

**NOTES:**

1. REFER TO STD DWG BA 4B2 FOR POST PLACEMENT AND CURB REQUIREMENTS.
2. COMPLETE SITE PREPARATION PRIOR TO INSTALLING TRANSITION.
3. INSTALL A CONNECTION PIN USING A CONNECTION PIN FROM STD DWG BA 1B.
4. INSTALL BARRIER STABILIZATION PINS PRIOR TO INSTALLING TERMINAL CONNECTION PLATE. PRE-DRILL 1 INCH DIA. HOLE THROUGH PAVED SURFACE PRIOR TO INSTALLING STABILIZATION PINS.
5. USE OF A HOT FORGED HEAD, MEETING PLATE SIZE AND THICKNESS IS ACCEPTABLE IN PLACE OF A WELDED PLATE.
6. MANUFACTURE ACCORDING TO AASHTO GUIDE TO STANDARDIZED HIGHWAY BARRIER HARDWARE COMPONENT. THE GUIDE REFERNCE NUMBER PLACED IN PARENTHESIS IS LOCATED AFTER THE COMPONENT TILE.
7. THREE W-BEAM RAIL ELEMENTS REQUIRED PER APPROACH TRANSITION.
8. 96 INCH POST MARKINGS: WOOD POST, BRAND POST WITH 1 1/2 INCH X 2 INCH MARKING L96. STEEL POSTS, STAMP POST WITH 1 1/2 INCH X 2 INCH MARKING L96, THE SINGLE NUMBER 8 A MINIMUM 3 INCHES HIGH MAY BE SUBSTITUTED FOR L96. BRANDING OR STAMPING REQUIRED PRIOR TO INSTALLATION.

SUPPLEMENTAL DRAWING

REVISIONS

| NO. | DATE | APPR. | REMARKS |
|---|---|---|---|
| 1 | 10/26/2017 | SDD | MODIFIED SLOT DIMENSION TO MEET AASHTO M-180. DELETED NOTE 7, RENUMBERED NOTES. MODIFIED CALLOUTS. |

**UTAH DEPARTMENT OF TRANSPORTATION**
STANDARD DRAWINGS FOR ROAD AND BRIDGE CONSTRUCTION
SALT LAKE CITY, UTAH

RECOMMENDED FOR APPROVAL — OCT.26, 2017 DATE
CHAIRMAN STANDARDS COMMITTEE APPROVED — OCT.26, 2017 DATE
DEPUTY DIRECTOR

W-BEAM GUARDRAIL TRANSITION HARDWARE

STANDARD DRAWING TITLE

STD. DWG. NO.
BA 4B1

DGN File: Q:\StandardsandSpecsSection\2017Section\All Supp Issues\Issue # 3 10-26-2017\Drawings\BA04B1.dgn
07-NOV-2017

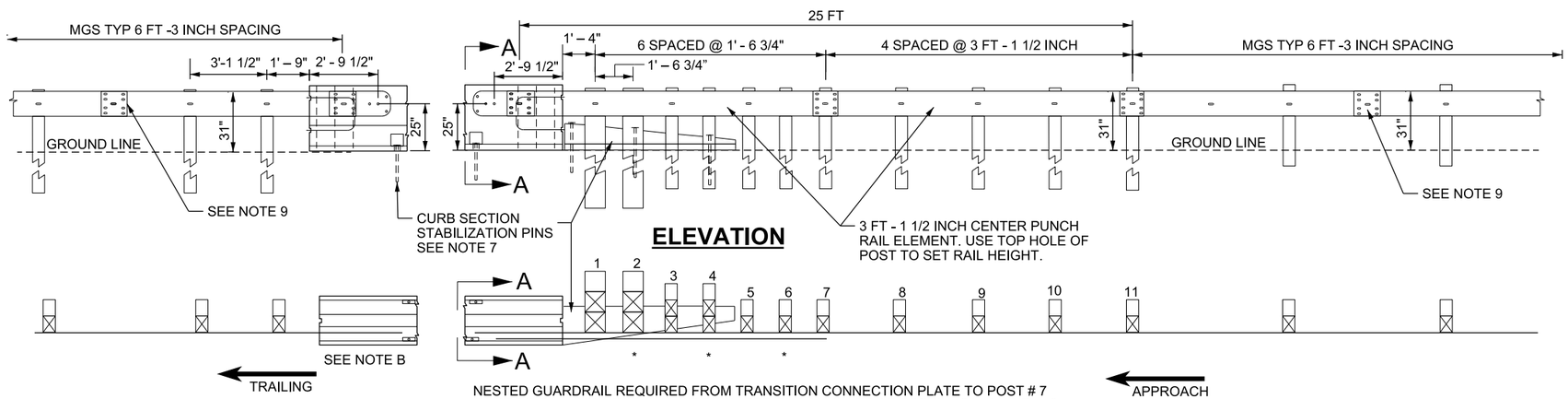


## W-BEAM GUARDRAIL TRANSITION TO NEW JERSEY SHAPE BARRIER

RIGHT SIDE SHOWN LEFT SIDE SIMILAR

SEE NOTE 2

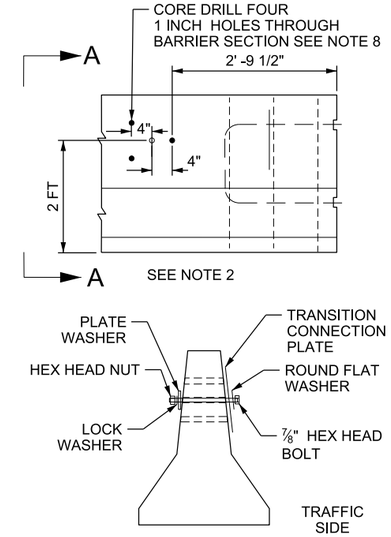


SECTION A-A
SEE NOTE B, 2, & 4

## SECTION A-A

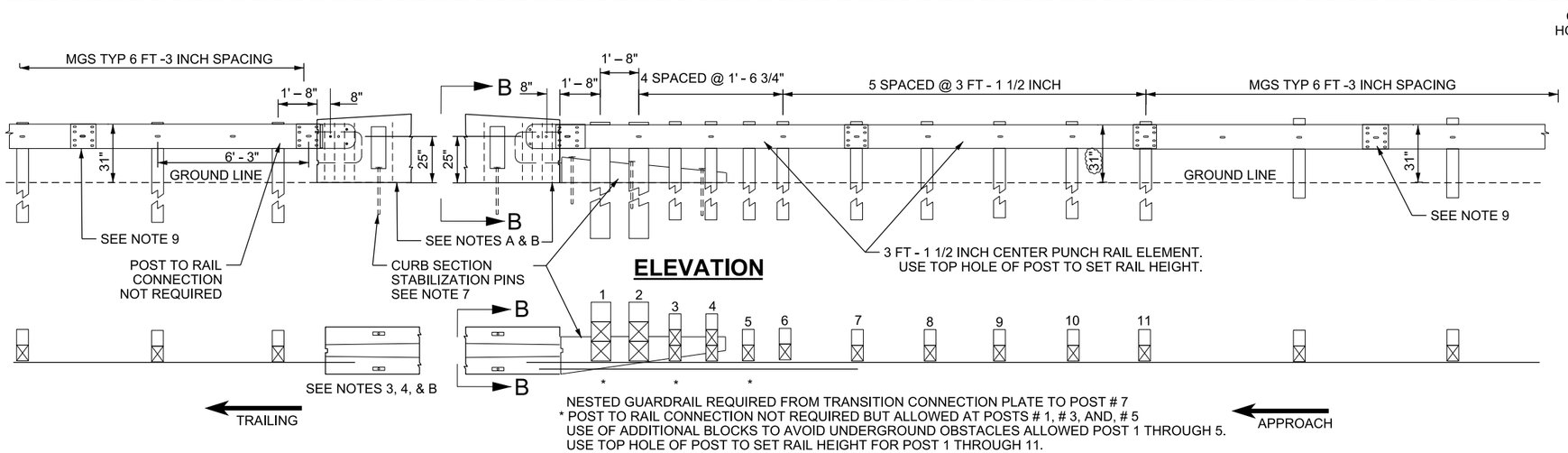


## W-BEAM GUARDRAIL TRANSITION TO CONSTANT SLOPE BARRIER

RIGHT SIDE SHOWN LEFT SIDE SIMILAR

SEE NOTE 2

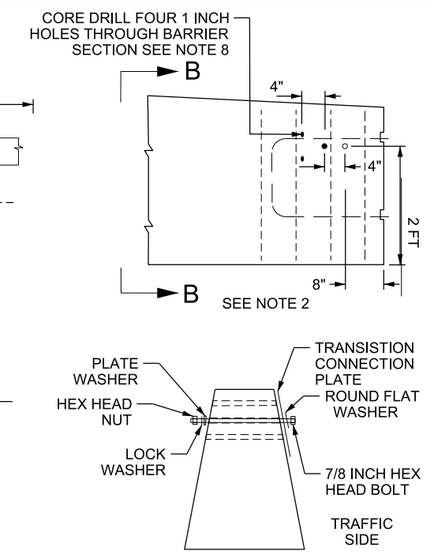


## SECTION B-B

SEE NOTES A,B,2, 3, & 4

ATTACHMENT HARDWARE: USE WITH BOTH TYPES OF BARRIER:

4- 7/8 INCH DIA. (AASHTO M 164) HEX HEAD BOLTS, WITH 1 3/4 INCH ROUND FLAT WASHER UNDER EACH BOLT HEAD. BOLT LENGTH VARIES BASED ON BARRIER TYPE AND BOLT LOCATION.
4- 3 INCH x 3 INCH x 1/4 INCH INCH SQUARE PLATE WASHER WITH A CENTER HOLE 1 INCH DIA.
4- 7/8 INCH LOCK WASHER, PLACED ON TOP TO SQUARE WASHER
4- 7/8 INCH HEX NUTS (AASHTO M 291M)

ALL HARDWARE GALVANIZED

**DESIGN-ONLY NOTES:**

A. PRECAST CONSTANT SLOPE TRANSITION SECTION FOR CRASH CUSHIONS AND W-BEAM GUARDRAIL, STD DWG BA 3 SERIES IS REQUIRED OR WHEN INSTALLING ON CAST IN PLACE CONSTANT SLOPE BARRIER THE APPROACH AND TRAILING ENDS MUST BE DROPPED DOWN ACCORDING TO STD DWG BA 3 SERIES.
B. APPROACH TRANSITION ON THE TRAILING END OF A BARRIER OR BRIDGE PARAPET ON 2 LANE 2 WAY OR MULTI LANE NON DIVIDED ROADWAYS IS REQUIRED WHEN THE BARRIER END OR BRIDGE PARAPET END IS WITHIN THE MAXIMUM REQUIRED CLEAR ZONE OF OPPOSING TRAFFIC. CONNECTION ALLOWED ON NEW JERSEY SHAPE PARAPET, DO NOT CONNECT TO FULL HEIGHT CONSTANT SLOPE PARAPET.

**NOTES:**

1. SEE STD DWG BA 4B1 FOR TRANSITION COMPONENTS.
2. SEE PLAN SET FOR BARRIER TYPE.
3. DO NOT CONNECT AN APPROACH TRANSITION TO CONSTANT SLOPE BRIDGE PARAPET OR FULL HEIGHT CONSTANT SLOPE BARRIER.
4. INSTALL CONNECTION HARDWARE ACCORDING TO SECTION A-A OR B-B. USE BOLTS LONG ENOUGH THAT THE NUT WILL HAVE FULL ENGAGEMENT OF THE BOLT AND NO MORE THAN 1/4 INCH TO 1/2 INCH OF BOLT IS ABOVE THE NUT. CUT AND FIELD COAT BOLT WITH A ZINC COMPOUND WHEN BOLT EXCEEDS 1/2 INCH ABOVE THE NUT.
5. DO NOT USE ALL THREAD ROD.
6. COMPLETE SITE PREPARATIONS PRIOR TO INSTALLING TRANSITION.
7. INSTALL APPROPRIATE CURB SECTION FOR TYPE OF BARRIER BEING USED. SEE STD DWG BA 4B4 FOR CURB TYPE. INSTALL BARRIER CONNECTION PIN AND STABILIZATION PINS WHERE REQUIRED. REFER TO BA 1 OR BA 3B SERIES STD DWGS FOR STABILIZATION PIN REQUIREMENTS.
8. DO NOT USE ROTARY PERCUSSION DRILL. CORE DRILLING REQUIRED.
9. INSTALL SPLICE BOLTS ONLY WITHIN THE MGS SYSTEM. DO NOT INSTALL CENTER BOLT.

SUPPLEMENTAL DRAWING

REVISIONS

| NO. | DATE | APPR. | REMARKS |
|---|---|---|---|
| 1 | 10/26/2017 | SDD | MODIFIED MGS RAIL CONNECTION TO TRANSITIONS |
| | | | CLARIFIED TRANSITION BLOCK REQUIREMENTS. |
| | | | ADDED NOTE 9. |

**UTAH DEPARTMENT OF TRANSPORTATION**
STANDARD DRAWINGS FOR ROAD AND BRIDGE CONSTRUCTION
SALT LAKE CITY, UTAH

RECOMMENDED FOR APPROVAL — OCT.26, 2017 DATE
CHAIRMAN STANDARDS COMMITTEE APPROVED — OCT.26, 2017 DATE
DEPUTY DIRECTOR

W-BEAM GUARDRAIL TRANSITION LAYOUTS APPROACH END AND MIDWEST 31 INCH GUARDRAIL TRAILING END

STANDARD DRAWING TITLE

STD. DWG. NO.
BA 4B2

DGN File: Q:\Standards and Specs Section\2017 Section\All Supp Issues\Issue # 3 10-26-2017\Drawings\BA04B2.dgn
07-NOV-2017

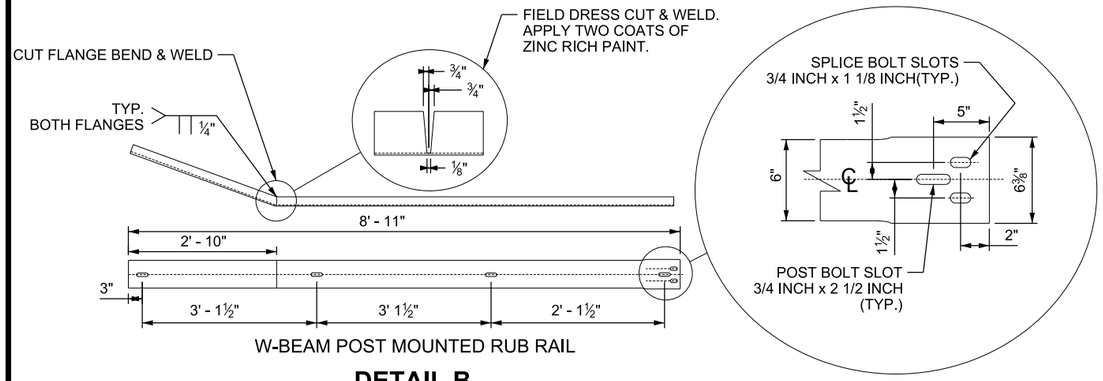


W-BEAM POST MOUNTED RUB RAIL

## DETAIL B

SEE NOTE 2

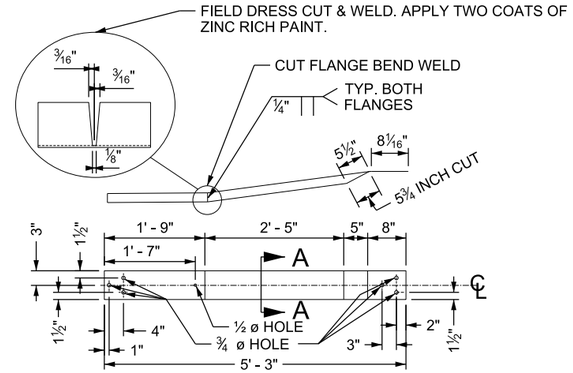


CONCRETE BARRIER MOUNTED RUB RAIL

## DETAIL A

SEE NOTE 2

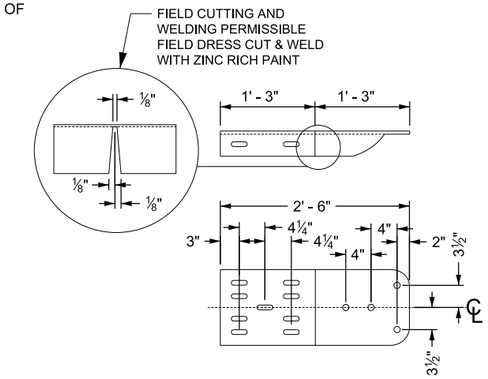


TERMINAL CONNECTION PLATE (RWE02A MODIFIED)

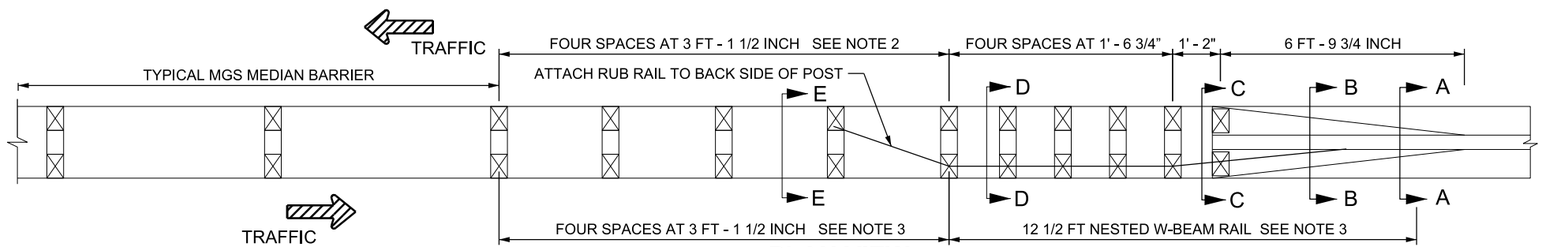


## PLAN VIEW

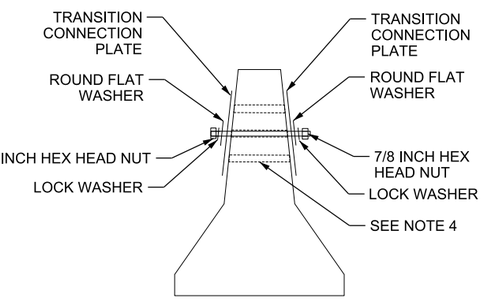


## SECTION A-A

SEE NOTES 4 & 9

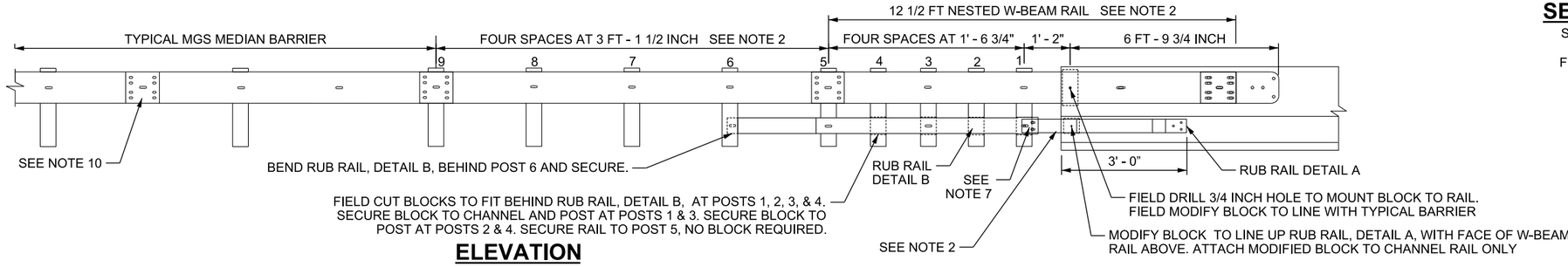


## ELEVATION

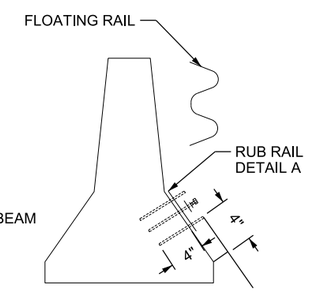


## SECTION B-B

SEE NOTES 1, 2, 5, & 9

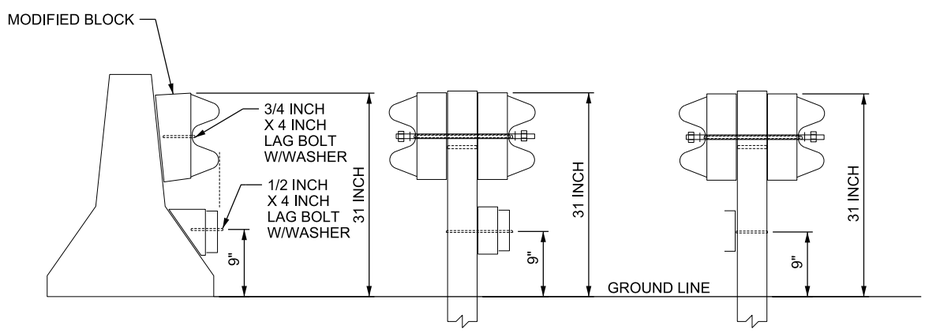


## SECTION C-C

SEE NOTES 1 & 2

## SECTION D-D

SEE NOTES 6,7, 9, & 11

## SECTION E-E

SEE NOTES 7, 8, 9, & 11

**NOTES:**

1. NEW JERSEY STYLE BARRIER SHOWN. ATTACH TO CONSTANT SLOPE BARRIER IN SIMILAR MANNER. USE CONSTANT SLOPE TRANSITION SECTION, FROM 42 INCHES TO 32 INCHES ACCORDING TO BARRIER TYPE PRIOR TO ATTACHING TRANSITION SECTION.
2. USE C6X 8.2 CHANNEL RUB RAIL FOR THE MANUFACTURING OF DETAIL A AND DETAIL B. TWIST DETAIL A TO A 35 DEGREE RIGHT HAND TWIST. GALVANIZE TO MEET AASHTO M 111 AFTER PUNCHING, CUTTING AND TWISTING ARE COMPLETE.
3. USE TRANSITION GUARDRAIL PANELS ACCORDING TO STD DWG BA 4B1.
4. CORE DRILL BARRIER WITH 1 INCH HOLES, DO NOT USE ROTARY PERCUSSION DRILL. INSTALL TRANSITION CONNECTION PLATE USING 7/8 INCH HIGH STRENGTH TREADED RODS WITH ROUND WASHERS, LOCK WASHERS, AND NUTS ON BOTH SIDES OF THE BARRIER SO THAT NUTS WILL HAVE FULL ENGAGEMENT OF ROD AND WILL NOT BE GREATER THAN 1/2 INCH ABOVE NUT.
5. DRILL BARRIER WITH 3 HOLES, EACH MEASURING 3/4 INCH X 4 INCH. INSTALL THREE 5/8 INCH X 5 1/2 INCH HIGH STRENGTH TREADED RODS USING AASHTO M 235 EPOXY. INSTALL ROUND WASHERS, LOCK WASHERS, AND NUTS SO THAT NUTS WILL HAVE FULL ENGAGEMENT OF ROD AND WILL NOT BE GREATER THAN 1/2 INCH BEYOND NUT.
6. USE 5/8 INCH THREAD ROD WITH WASHERS AND NUTS TO ATTACH W-BEAM GUARDRAIL TO POSTS. USE CENTER HOLE OF POST FOR ATTACHMENT SO THAT NUTS WILL HAVE FULL ENGAGEMENT OF ROD AND WILL NOT BE GREATER THAN 1/2 INCH ABOVE NUT.
7. USE TYPICAL GUARDRAIL SPLICE BOLTS TO CONNECT RUB RAIL DETAIL A AND RUB RAIL DETAIL B TOGETHER. USE TYPICAL GUARDRAIL BUTTON HEAD BOLTS TO ATTACH RUB RAIL TO BLOCKS AND POSTS.
8. ATTACH RUB RAIL TO BACK OF POST # 6.
9. USE GALVANIZED OR ZINC COATED HARDWARE TO MOUNT TRANSITION CONNECTION PLATE, RUB RAIL, DETAIL A, ONTO CONCRETE BARRIER, W-BEAM CONNECTION RODS, AND LAG BOLTS.
10. INSTALL SPLICE BOLTS ONLY WITHIN THE MGS SYSTEM. DO NOT INSTALL CENTER BOLT.
11. USE TOP HOLE OF POST TO SET RAIL HEIGHT THROUGH SECTIONS D AND E.

SUPPLEMENTAL DRAWING

| NO. | DATE | APPR. | REMARKS |
|---|---|---|---|
| 1 | 10/26/2017 | SDD | CORRECTED TRANSITION HEIGHT REQUIREMENT. |

REVISIONS

**UTAH DEPARTMENT OF TRANSPORTATION**
STANDARD DRAWINGS FOR ROAD AND BRIDGE CONSTRUCTION
SALT LAKE CITY, UTAH

RECOMMENDED FOR APPROVAL — OCT.26, 2017 DATE
CHAIRMAN STANDARDS COMMITTEE APPROVED — OCT.26, 2017 DATE
DEPUTY DIRECTOR — DATE

MIDWEST 31 INCH W-BEAM GUARDRAIL MEDIAN BARRIER AND TRANSITION HARDWARE AND LAYOUT

STANDARD DRAWING TITLE

STD. DWG. NO.
BA 4B4

DGN File: Q:\Standardsand\Specs\Section\2017Section\All Supp Issues\Issue # 3 10-26-2017\Drawings\BA0484.dgn
07-NOV-2017

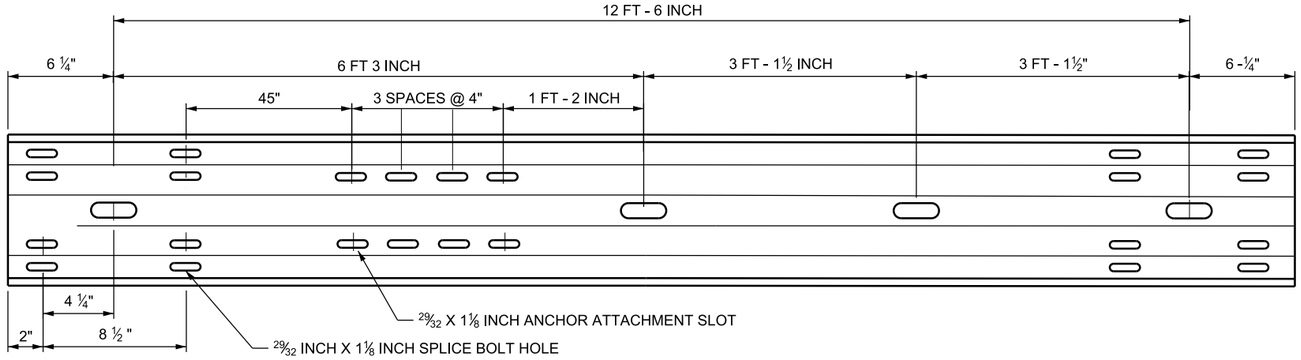


## RAIL ELEMENT

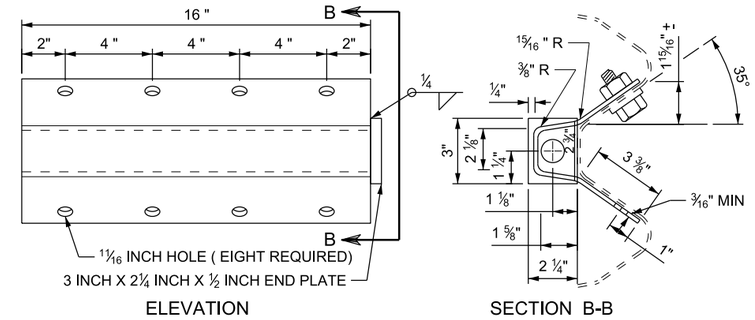


## ANCHOR BRACKET (FPA01)

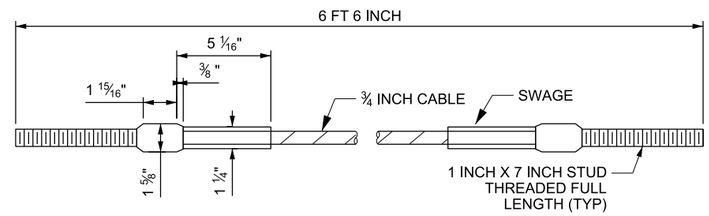


## BCT CABLE ANCHOR ASSEMBLY (FCA01)

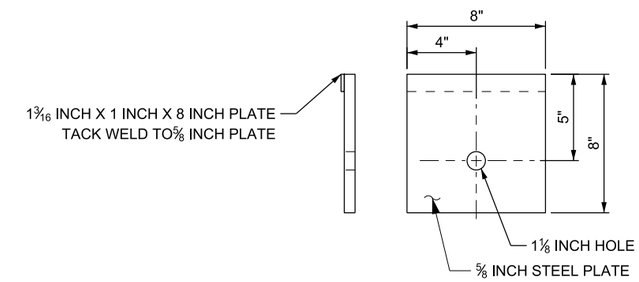


NOTE:
INSTALL BEARING PLATE WITH
5 INCH PORTION UP. SECURE PLATE
TO POST USING TWO NAILS AT
TOP OF PLATE TO PREVENT ROTATION.

## BEARING PLATE (FPB01)

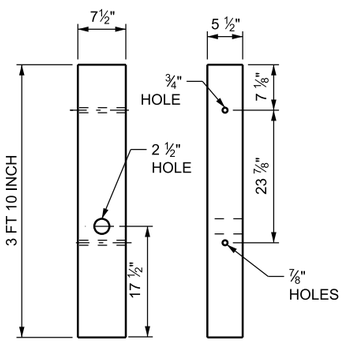


## WOOD BREAKAWAY POST (PDF01)

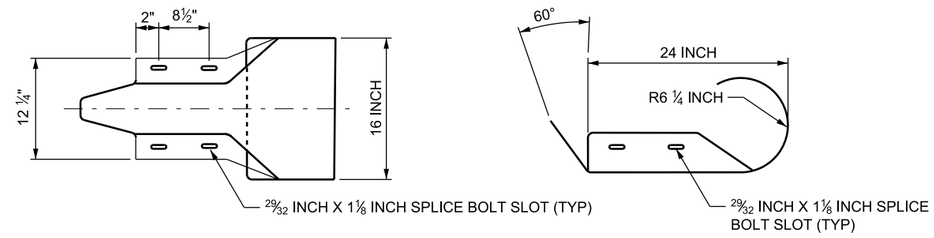


## END SECTION (ROUNDED)(RWE03A)

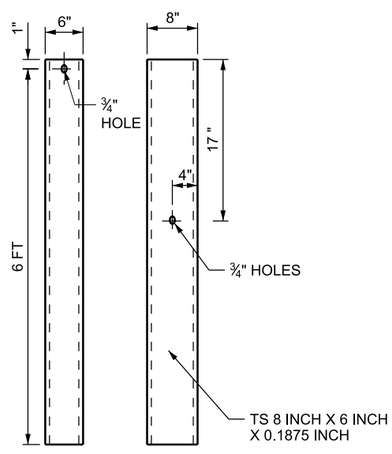


## FOUNDATION TUBE (PTE06)

SEE NOTE 1

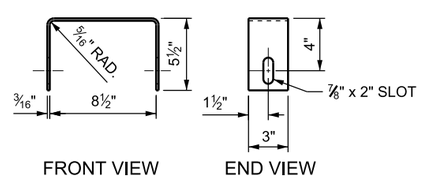


## YOKE DETAILS

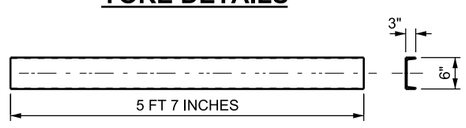


## STRUT DETAILS

6"x3" 10 GAUGE
SEE NOTE 2

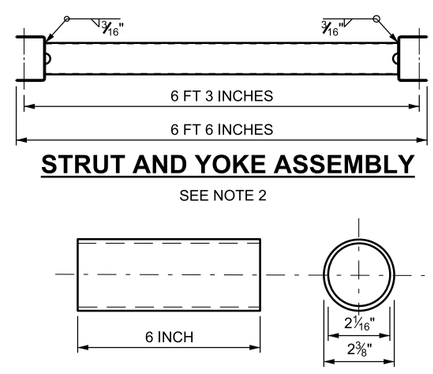


## STRUT AND YOKE ASSEMBLY

SEE NOTE 2

## BREAKAWAY TERMINAL POST SLEEVE (FMM02)

**DESIGN-ONLY NOTES**

A. DO NOT USE ON APPROACH END.
B. USE ON BARRIER TRAILING END ON DIVIDED ROADWAYS WITH A POSITIVE SEPARATION OR MEDIAN WIDTH GREATER THAN OR EQUAL TO 36 FT MEASURED FROM EDGE OF TRAVEL LANE TO EDGE OF TRAVEL LANE AND BARRIER END IS OUTSIDE THE MAXIMUM REQUIRED CLEAR ZONE AS DEFINED IN STD DWG DD 18 AND THE AASHTO ROADSIDE DESIGN GUIDE.

**NOTES:**

1. MANUFACTURE ACCORDING TO AASHTO GUIDE TO STANDARDIZED HIGHWAY BARRIER HARDWARE. NUMBER IN PARENTHESIS IS GUIDE REFERENCE NUMBER.
2. MANUFACTURE STRUT AND YOLK ASSEMBLY TO MEET ASTM A36 STEEL GALVANIZED.
3. INSTALL SPLICE BOLTS ONLY WITHIN THE MID-SPAN SPLICE JOINT. DO NOT INSTALL CENTER BOLT.

SUPPLEMENTAL DRAWING

| REVISIONS | | | | |
|---|---|---|---|---|
| NO. | DATE | APPR. | REMARKS | |
| 1 | 10/26/2017 | SDD | NEW DRAWING. | |

**UTAH DEPARTMENT OF TRANSPORTATION**
STANDARD DRAWINGS FOR ROAD AND BRIDGE CONSTRUCTION
SALT LAKE CITY, UTAH

RECOMMENDED FOR APPROVAL — OCT.26, 2017 DATE
CHAIRMAN STANDARDS COMMITTEE — OCT.26, 2017 DATE
APPROVED
DEPUTY DIRECTOR

MIDWEST 31 INCH W-BEAM GUARDRAIL ANCHOR TYPE 1
STANDARD DRAWING TITLE

STD. DWG. NO.
BA 4C1A

DGN File: G:\Standards and Specs Section\2017 Section\All Supp Issues\Issue # 3 10-26-2017\Drawings\BA04C1A.dgn
07-NOV-2017

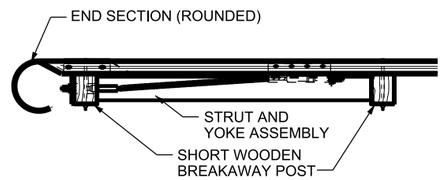


## PLAN

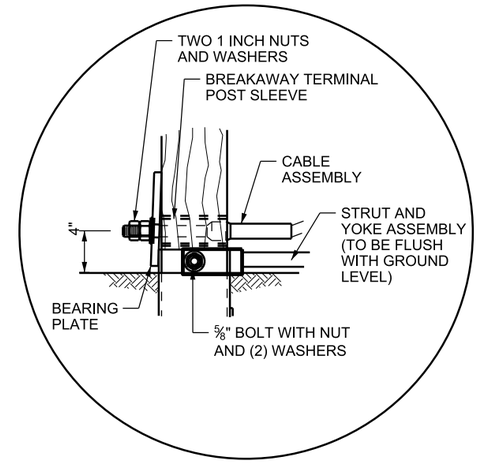


## DETAIL A

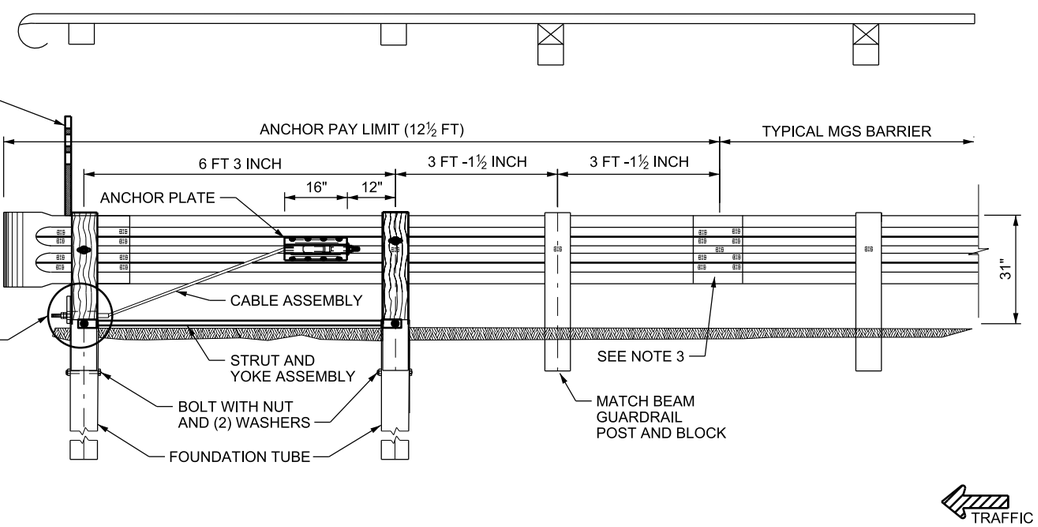


# TRAILING END W-BEAM ANCHOR INSTALLATION

**DESIGN-ONLY NOTES**

A. DO NOT USE ON APPROACH END.
B. USE ON BARRIER TRAILING END ON DIVIDED ROADWAYS WITH A POSITIVE SEPARATION OR MEDIAN WIDTH GREATER THAN OR EQUAL TO 36 FT MEASURED FROM EDGE OF TRAVEL LANE TO EDGE OF TRAVEL LANE AND BARRIER END IS OUTSIDE THE MAXIMUM REQUIRED CLEAR ZONE AS DEFINED IN STD DWG DD 18 AND THE AASHTO ROADSIDE DESIGN GUIDE.

**NOTES:**

1. MANUFACTURE ACCORDING TO AASHTO GUIDE TO STANDARDIZED HIGHWAY BARRIER HARDWARE. NUMBER IN PARENTHESIS IS GUIDE REFERENCE NUMBER.
2. INSTALL SPLICE BOLTS ONLY WITHIN THE MID-SPAN SPLICE JOINT. DO NOT INSTALL CENTER BOLT.

SUPPLEMENTAL DRAWING

REVISIONS

| NO. | DATE | APPR. | REMARKS |
|---|---|---|---|
| 1 | 10/26/2017 | SDD | NEW DRAWING. |

UTAH DEPARTMENT OF TRANSPORTATION
STANDARD DRAWINGS FOR ROAD AND BRIDGE CONSTRUCTION
SALT LAKE CITY, UTAH

RECOMMENDED FOR APPROVAL — OCT.26, 2017 DATE
CHAIRMAN STANDARDS COMMITTEE APPROVED — OCT.26, 2017 DATE
DEPUTY DIRECTOR

STANDARD DRAWING TITLE
MIDWEST 31 INCH W-BEAM GUARDRAIL ANCHOR TYPE 1

STD. DWG. NO.
BA 4C1B

07-NOV-2017 DGN File: D:\StandardsandSpecsSection\2017Section\All Supp Issues\Issue # 3 10-26-2017\Drawings\BA04C1B.dgn

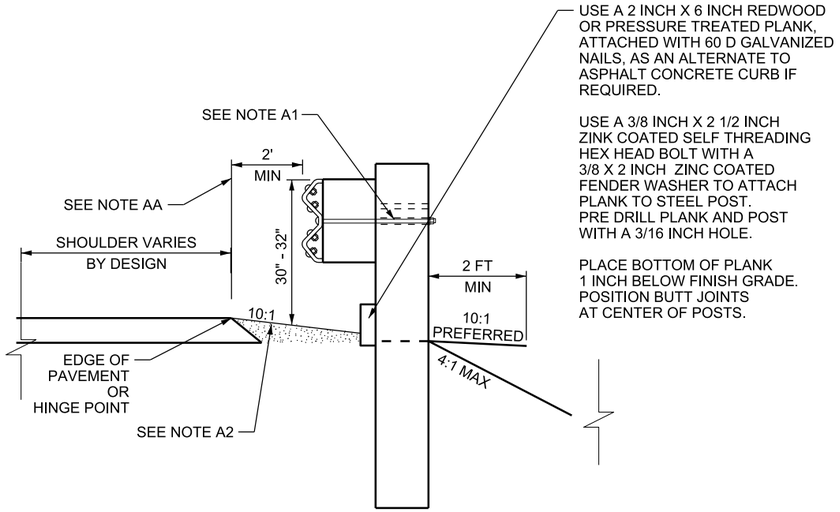


**DESIGN-ONLY NOTES:**

AA. THE 2 FT MIN OFFSET IS OPTIONAL WHEN ROADWAY DESIGN REQUIRES 12 FT OR WIDER EFFECTIVE SHOULDER. (PLACE AS FAR OFF PAVEMENT EDGE AS PRACTICAL)

**NOTES:**

A1. USE TOP HOLE OF POST TO SET RAIL HEIGHT WHEN PAVEMENT SURFACE, TRAVEL LANES, ARE CONSTRUCTED WITH PORTLAND CEMENT CONCRETE PAVEMENT. USE BOTTOM HOLE OF POST TO SET RAIL HEIGHT WHEN PAVEMENT SURFACE, TRAVEL LANES, ARE CONSTRUCTED WITH HOT MIX ASPHALT (HMA).

A2. MATCH ROADWAY CROSS-SLOPE IF SUPERELEVATED MORE THAN 2 PERCENT.

## DETAIL A: INITIAL INSTALLATION

USE 78" LONG POSTS

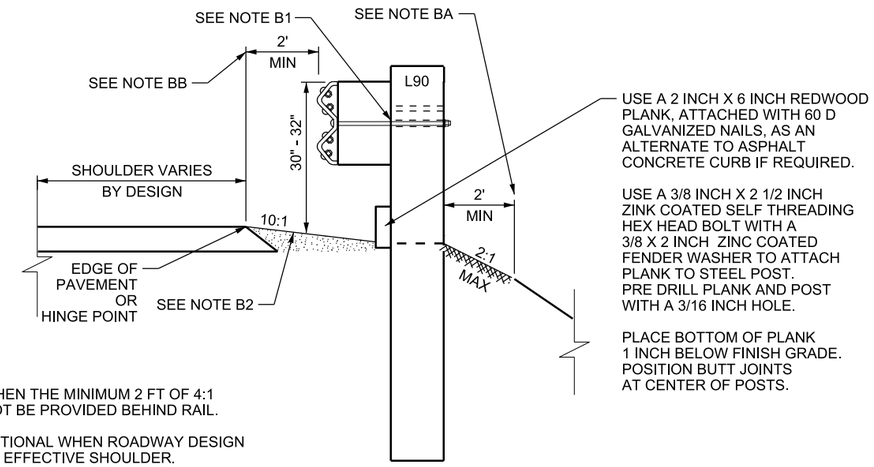


**DESIGN-ONLY NOTES:**

BA. USE THIS INSTALLATION WHEN THE MINIMUM 2 FT OF 4:1 OR FLATTER SLOPE CANNOT BE PROVIDED BEHIND RAIL.

BB. THE 2 FT MIN OFFSET IS OPTIONAL WHEN ROADWAY DESIGN REQUIRES 12 FT OR WIDER EFFECTIVE SHOULDER. (PLACE AS FAR OFF PAVEMENT EDGE AS PRACTICAL)

**NOTES:**

B1. USE TOP HOLE OF POST TO SET RAIL HEIGHT WHEN PAVEMENT SURFACE, TRAVEL LANES, ARE CONSTRUCTED WITH PORTLAND CEMENT CONCRETE PAVEMENT. USE BOTTOM HOLE OF POST TO SET RAIL HEIGHT WHEN PAVEMENT SURFACE, TRAVEL LANES, ARE CONSTRUCTED WITH HOT MIX ASPHALT (HMA).

B2. MATCH ROADWAY CROSS-SLOPE IF SUPERELEVATED MORE THAN 2 PERCENT.

## DETAIL B: INITIAL LONG POST INSTALLATION

USE 90" LONG POSTS

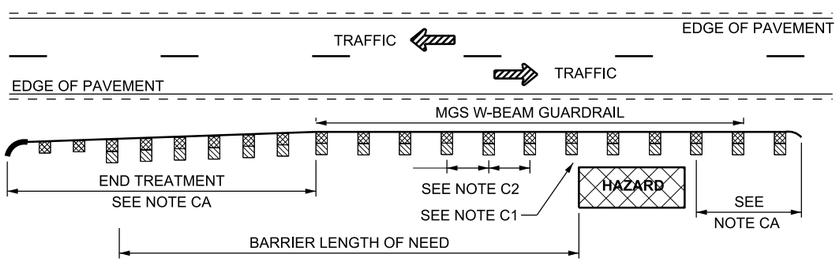


**DESIGN-ONLY NOTES:**

CA. REFER TO TYPICAL LAYOUT DRAWING TO DETERMINE APPROACH END TREATMENT OR TRAILING END ANCHOR REQUIREMENTS.

**NOTE:**

C1. REFER TO STD DWG BA 4H3 IF 38 INCH CLEARANCE IS NOT ACHIEVED FROM BACK OF POST TO FACE OF HAZARD.
C2. USE 6 FT 3 INCH POST SPACING WITH TYPICAL APPLICATIONS.

## DETAIL C: TYPICAL INSTALLATION

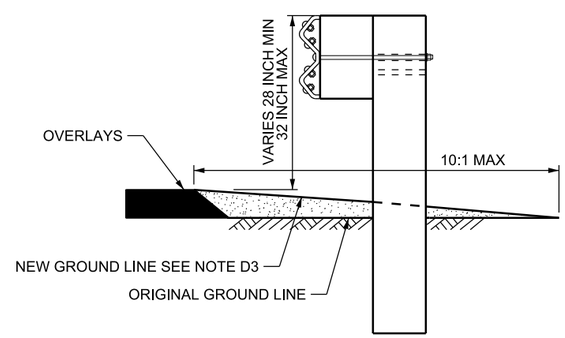


## DETAIL D: EXISTING RAIL ELEMENT RAISED

DO NOT USE FOR INITIAL INSTALLATION
SEE DISIGN-ONLY NOTES

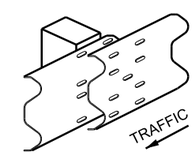


## SPLICE LAP DETAIL

**DESIGN-ONLY NOTES:**

DA. RAISE RAIL ELEMENT WHEN OVERLAY IS REQUIRED AND WHEN THE MINIMUM REQUIRED HEIGHT CANNOT BE MAINTAINED.

DB. RAISING THE RAIL ELEMENT TO REQUIRED HEIGHT, WITH THE 2 HOLE POST SYSTEM, REQUIRED BEFORE THE MINIMUM HEIGHT OF THE RAIL ELEMENT ABOVE GROUND LEVEL CAN BE REDUCED TO THE MINIMUM OF 28 INCH.

DC. RAISED RAIL ELEMENT WILL ACCOMMODATE 6 INCH TO 8 INCH OF OVERLAY MATERIAL.

DD. ADD SEPARATE PAY ITEM FOR SHOULDERING MATERIAL REQUIRED TO MEET MINIMUM RAIL HEIGHT REQUIREMENTS.

**NOTES:**

D1. SLOPE OF SHOULDER INTO FACE OF RAIL NOT TO EXCEED 8:1.

D2. RAISE REDWOOD PLANKING WHEN REQUIRED.

D3. MATCH ROADWAY CROSS-SLOPE IF SUPERELEVATED MORE THAN 2 PERCENT.

SUPPLEMENTAL DRAWING

REVISIONS

| NO. | DATE | APPR. | REMARKS |
|---|---|---|---|
| 1 | 10/26/2017 | SDD | DETAIL D: CHANGED SLOPE REQUIRENTS. |

**UTAH DEPARTMENT OF TRANSPORTATION**
STANDARD DRAWINGS FOR ROAD AND BRIDGE CONSTRUCTION
SALT LAKE CITY, UTAH

RECOMMENDED FOR APPROVAL — OCT.26, 2017 DATE
CHAIRMAN STANDARDS COMMITTEE APPROVED — OCT.26, 2017 DATE
DEPUTY DIRECTOR

MIDWEST 31 INCH W-BEAM GUARDRAIL INSTALLATIONS

STANDARD DRAWING TITLE

STD. DWG. NO.
BA 4D1

DGN File: D:\StandardsandSpecsSection\2017Section\All Supp Issues\Issue # 3 10-26-2017\Drawings\BA04D1.dgn
07-NOV-2017

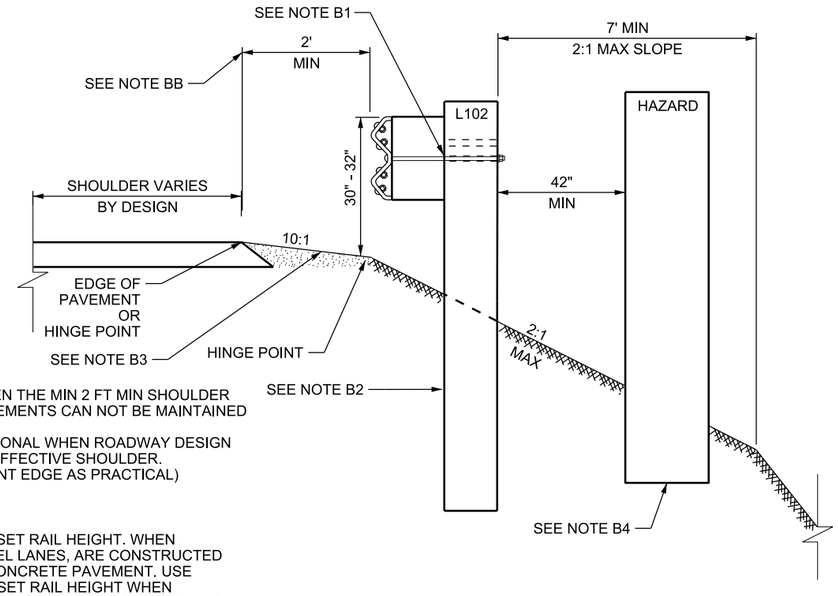


**DESIGN-ONLY NOTES:**

BA. USE THIS INSTALLATION WHEN THE MIN 2 FT MIN SHOULDER OFFSET AND SLOPE REQUIREMENTS CAN NOT BE MAINTAINED ACCORDING TO BA 4D1.
BB. THE 2 FT MIN OFFSET IS OPTIONAL WHEN ROADWAY DESIGN REQUIRES 12 FT OR WIDER EFFECTIVE SHOULDER. (PLACE AS FAR OFF PAVEMENT EDGE AS PRACTICAL)

**NOTES:**

B1. USE TOP HOLE OF POST TO SET RAIL HEIGHT. WHEN PAVEMENT SURFACE, TRAVEL LANES, ARE CONSTRUCTED WITH PORTLAND CEMENT CONCRETE PAVEMENT. USE BOTTOM HOLE OF POST TO SET RAIL HEIGHT WHEN PAVEMENT SURFACE, TRAVEL LANES, ARE CONSTRUCTED WITH HOT MIX ASPHALT (HMA).
B2. OMITTED POSTS IS NOT ALLOWED.
B3. MATCH ROADWAY CROSS-SLOPE TO FACE OF RAIL IF SUPERELEVATED MORE THAN 2 PERCENT.
B4. BARRIER DEFLECTION INCREASES TO 42 INCHES WITH THIS INSTALLATION.
B5. PLACE FACE OF RAIL AT OR PRIOR TO HINGE POINT.

## DETAIL E: INITIAL LONG POST 2:1 FILL SLOPE INSTALLATION

USE 102" LONG POSTS

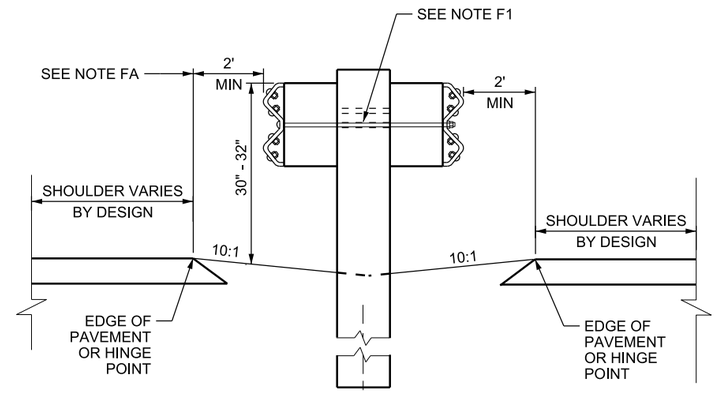


**DESIGN-ONLY NOTES:**

FA. THE 2 FT MIN BARRIER OFFSET IS OPTIONAL WHEN ROADWAY DESIGN REQUIRES A 12 FT OR WIDER EFFECTIVE SHOULDER. (PLACE AS FAR OFF PAVEMENT AS PRACTICAL.)

**NOTES:**

F1. USE TOP HOLE TO MOUNT BLOCK & RAIL IF MEDIAN BARRIER IS PLACED 12 FT OR GREATER FROM TRAVEL LANES .
F2. RAISE BOTH RAIL ELEMENTS AS PER RAIL ELEMENT RAISED DETAIL, WHEN REQUIRED.
F3. ATTACH REQUIRED DELINEATION ON THE POST.
F4. ALL THREAD ROD PERMITTED FOR USE TO ATTACH W-BEAM, POSTS AND BLOCKS. FULL ENGAGEMENT OF NUT REQUIRED ON BOTH SIDES OF RAIL AND NO MORE THAN 1/2 INCH OF EXPOSED ENDS ABOVE NUT.

## DETAIL F: MEDIAN BARRIER

USE 78" LONG POSTS

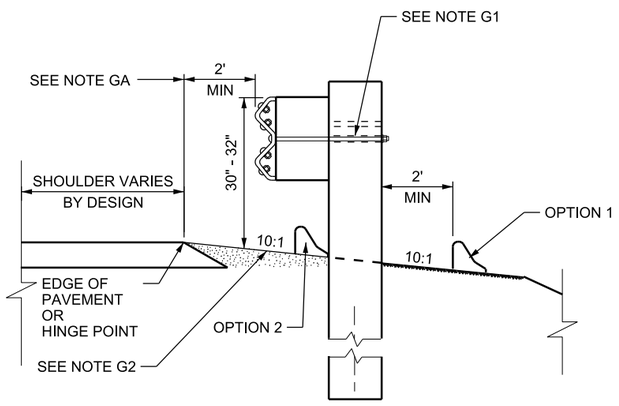


**DESIGN-ONLY NOTES:**

GA. THE 2 FT MIN BARRIER OFFSET IS OPTIONAL WHEN ROADWAY DESIGN REQUIRES A 12 FT OR WIDER EFFECTIVE SHOULDER . (PLACE AS FAR OFF PAVEMENT AS PRACTICAL)

OPTION 1: PREFERRED INSTALLATION.

OPTION 2: PLACE FACE OF ASPHALT CONCRETE CURB BEHIND FACE OF RAIL. 2 INCH MAXIMUM CURB HEIGHT WHEN USED IN FRONT OF POST.

**NOTE:**

G1. USE TOP HOLE OF POST TO SET RAIL HEIGHT WHEN PAVEMENT SURFACE, TRAVEL LANES, ARE CONSTRUCTED WITH PORTLAND CEMENT CONCRETE PAVEMENT. USE BOTTOM HOLE OF POST TO SET RAIL HEIGHT WHEN PAVEMENT SURFACE, TRAVEL LANES, ARE CONSTRUCTED WITH HOT MIX ASPHALT (HMA).
G2. MATCH ROADWAY CROSS-SLOPE TO 2 FT BEHIND POST IF SUPERELEVATED MORE THAN 2 PERCENT.

## DETAIL G: INSTALLATION W/ASPHALT CONCRETE CURB

USE 78" LONG POSTS

SUPPLEMENTAL DRAWING

REVISIONS

| NO. | DATE | APPR. | REMARKS |
|---|---|---|---|
| 1 | 10/26/2017 | SDD | DETAIL E: CORRECTED 7' DIMENSION. ADDED NOTE B5. ADDED HINGE POINT CALL OUT. |

UTAH DEPARTMENT OF TRANSPORTATION
STANDARD DRAWINGS FOR ROAD AND BRIDGE CONSTRUCTION
SALT LAKE CITY, UTAH

RECOMMENDED FOR APPROVAL — OCT.26, 2017 DATE
CHAIRMAN STANDARDS COMMITTEE APPROVED — OCT.26, 2017 DATE
DEPUTY DIRECTOR

MIDWEST 31 INCH W-BEAM GUARDRAIL INSTALLATIONS

STANDARD DRAWING TITLE

STD. DWG. NO.
BA 4D2

DGN File: Q:\Standards&SpecsSection\2017Section\All Supp Issues\Issue # 3 10-26-2017\Drawings\BA04D2.dgn
07-NOV-2017

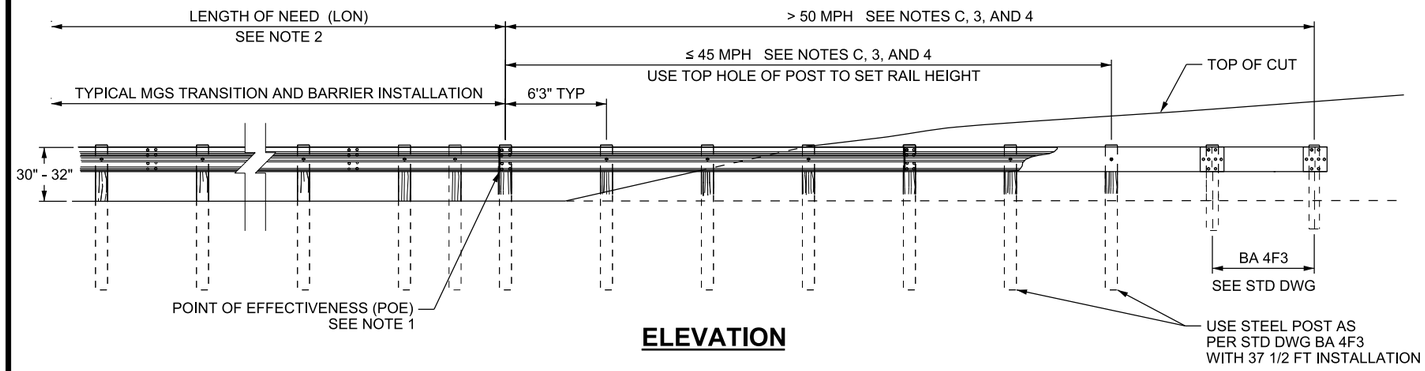


## ELEVATION

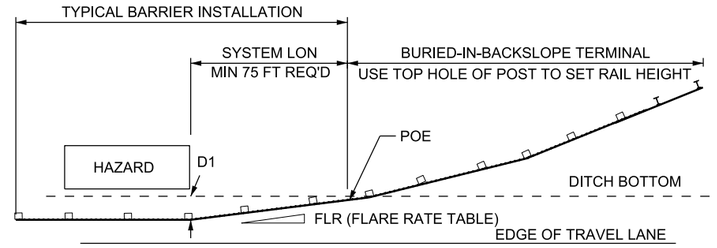


SYSTEM LON = FLR x D1
USE THIS DETAIL IF BACKSLOPE IS STEEPER 3:1.
THIS DETAIL APPLIES AT ALL SPEED LEVELS.

## DETAIL A

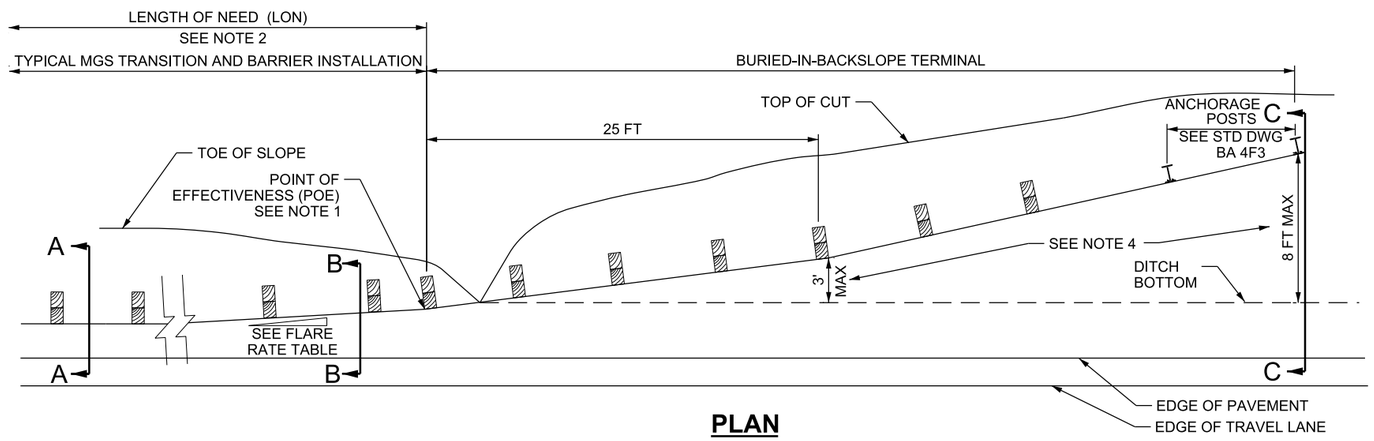


## PLAN

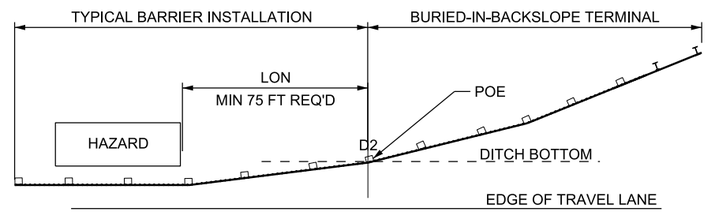


≥ 50 MPH "LON" = 450 - (15 x D2) ≤ 45 MPH "LON" = 250 - (15 x D2)
USE THIS DETAIL IF BACKSLOPE IS 3:1 TO A MINIMUM 4:1
SEE NOTE C

## DETAIL B

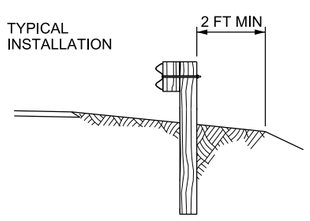


## SECTION A-A

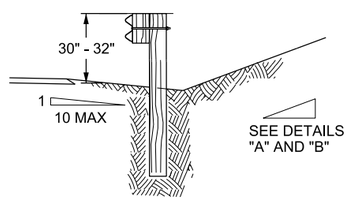


## SECTION B-B

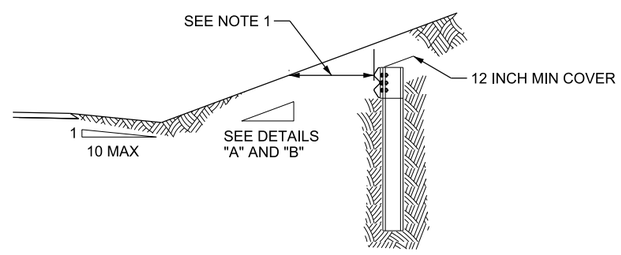


## SECTION C-C

| FLARE RATE TABLE (FLR) | |
|---|---|
| POSTED SPEED (mph) | RATE |
| 40 OR LESS | 9:1 |
| 45 | 10:1 |
| 50 | 11:1 |
| 55 | 12:1 |
| 60 | 14:1 |
| 65 OR GREATER | 15:1 |

**DESIGN-ONLY NOTES:**

A. PRIOR TO USING THIS DESIGN, CONSULT AREA SUPERVISOR TO VERIFY NO NEED EXISTS FOR ACCESS BEHIND THE BARRIER INSTALLATION AND THAT DRAINAGE ISSUES ARE ADDRESSED.

B. DO NOT USE BURIED-IN-BACKSLOPE TERMINAL IN LOCATIONS WHERE THE BACKSLOPE IS FLATTER THAN 3:1, AND THERE IS NO DITCH OR A NARROW SHALLOW DITCH AND THE TOE OF SLOPE IS WITHIN 20 FT OF THE TRAVEL LANE.

C. DESIGN BURIED IN BACKSLOPE TERMINALS AT 37 1/2 FT FOR SPEEDS 45 MPH AND LESS, AND 50 FT FOR SPEED 50 MPH AND GREATER.

**NOTES:**

1. THE POINT OF EFFECTIVENESS (POE) IS AT THE RAIL FACE OF THE FIRST POST OF THE TERMINAL PRIOR TO CROSSING THE DITCH BOTTOM OR TOE OF SLOPE.
2. SEE DETAILS "A" AND "B" FOR LENGTH OF NEED (LON) REQUIREMENTS AND BACKSLOPE REQUIREMENTS.
3. REFER TO STD DWG BA 4F3 FOR BURIED-IN-BACKSLOPE TERMINAL ANCHORAGE POST DETAILS.
4. STARTING AT THE "POE" SOFTLY BEND RAIL ELEMENT 3 FT MAXIMUM FROM THE TOE OF SLOPE AT THE 25 FT POINT OF TERMINAL. SOFTLY BEND RAIL BACK UNTIL THE 1 FT BURIAL HAS BEEN OBTAINED TO A MAXIMUM OF 8 FT FROM THE TOE OF SLOPE FROM THE 25 FT POINT OF THE TERMINAL TO THE END OF THE TERMINAL. THE BURIED-IN-BACKSLOPE TERMINAL WILL BE SLOPED DOWN WHERE THE END IS 8 FT BEHIND THE TOE OF SLOPE AND 1 FT UNDER THE ORIGINAL GROUND LINE IF THE MAXIMUM 8 FT OFFSET IS REACHED AND THE 1 FT BURIAL HAS NOT BEEN ACHIEVED. THE BACK SLOPE AT THE ANCHORAGE POSTS SHOULD LOOK THE SAME AFTER INSTALLATION AS PRIOR TO INSTALLATION.
5. INSTALL A STABILIZATION MAT OVER DISTURBED AREA TO CONTROL EROSION, UNLESS DIRECTED DIFFERENTLY BY PROJECT SPECIFICATION OR ENGINEER.
6. USE IN ESTABLISHED SLOPES. DO NOT BUILD A MOUND TO USE THIS TERMINAL

SUPPLEMENTAL DRAWING

REVISIONS

| NO. | DATE | APPR. | REMARKS |
|---|---|---|---|
| 1 | 10/26/2017 | SDD | DELETED G4 GUARDRAIL ELEMENT DETAIL. |

UTAH DEPARTMENT OF TRANSPORTATION
STANDARD DRAWINGS FOR ROAD AND BRIDGE CONSTRUCTION
SALT LAKE CITY, UTAH

RECOMMENDED FOR APPROVAL — DATE OCT.26, 2017
CHAIRMAN STANDARDS COMMITTEE APPROVED — DATE OCT.26, 2017
DEPUTY DIRECTOR

W-BEAM GUARDRAIL
31 INCH BURIED IN
BACKSLOPE TERMINAL

STANDARD DRAWING TITLE

STD. DWG. NO.
BA 4F1

DGN File: Q:\StandardsandSpecsSection\2017Section\All Supp Issues\Issue # 3 10-26-2017\Drawings\BA04F1.dgn
07-NOV-2017

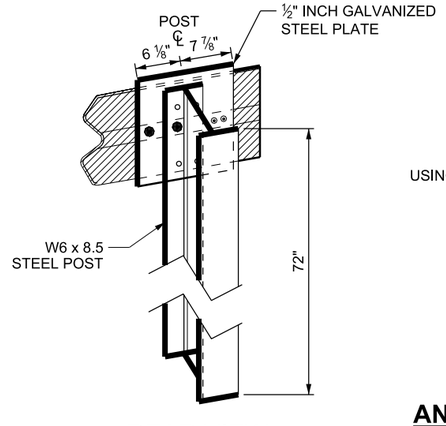


REAR VIEW

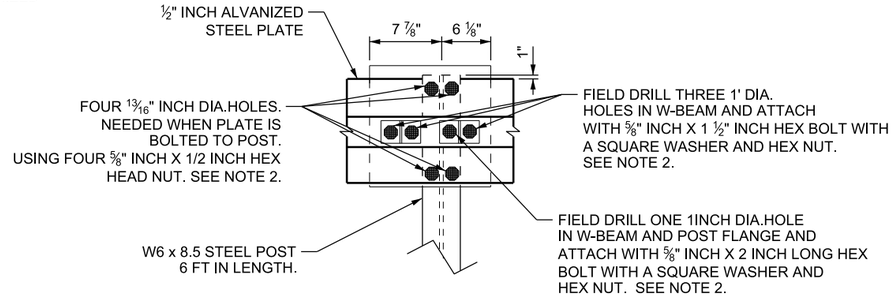


FRONT VIEW

## ANCHOR POST/PLATE ATTACHMENT FOR SINGLE RAIL ELEMENT

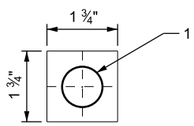


## SQUARE WASHER (3/16 INCH THICK,GALVANIZED)

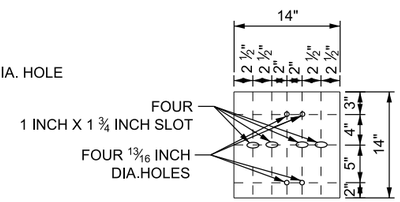


## 1/2 INCH STEEL PLATE (GALVANIZED)

**NOTES:**

1. USE 1/2 INCH STEEL PLATE MEETING REQUIREMENTS OF ASTM A 36.
2. GALVANIZING REQUIRED FOR PLATE AND HARDWARE.
3. USE ZINC RICH PAINT TO COAT FIELD DRILLED HOLES.

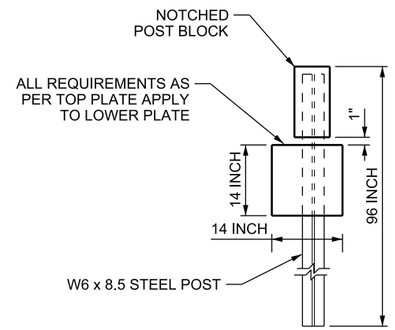


## ANCHOR POST/PLATE ATTACHMENT FOR RUB RAIL ELEMENT

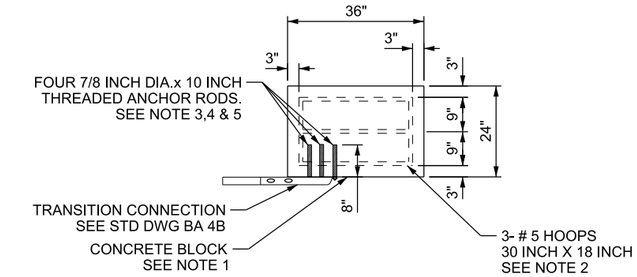


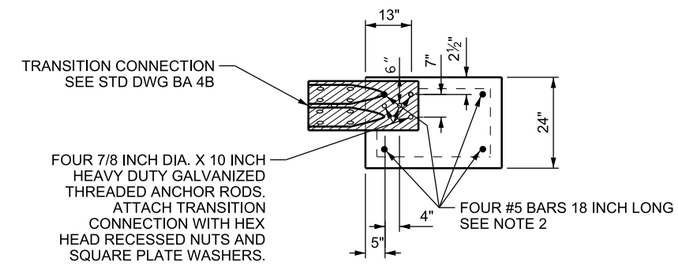


**NOTES:**

1. USE CONCRETE A(AE).
2. USE COATED REINFORCING STEEL.
3. USE GALVANIZED THREADED ROD.
4. THREADED RODS CAN BE CAST INTO CONCRETE BLOCK OR HOLES CAN BE DRILLED INTO BLOCK AND RODS EPOXIED IN.
5. DRILL HOLES A MINIMUM 9 INCH DEEP. CLEAN DRILLED HOLES PRIOR TO INSERTING TREAD ROD.

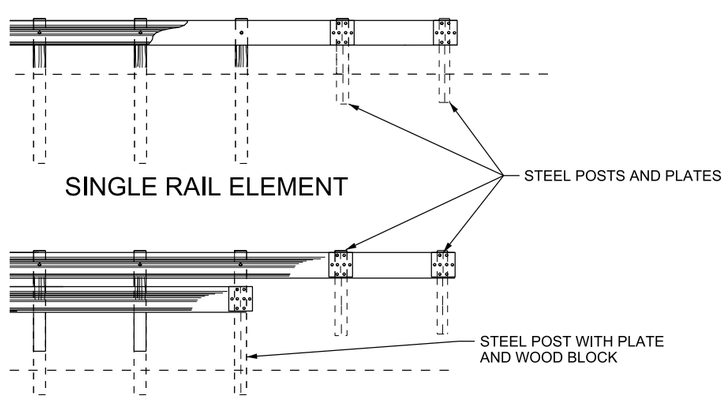


SINGLE RAIL ELEMENT

DOUBLE RAIL ELEMENT

## OPTION I STEEL POSTS AND PLATES

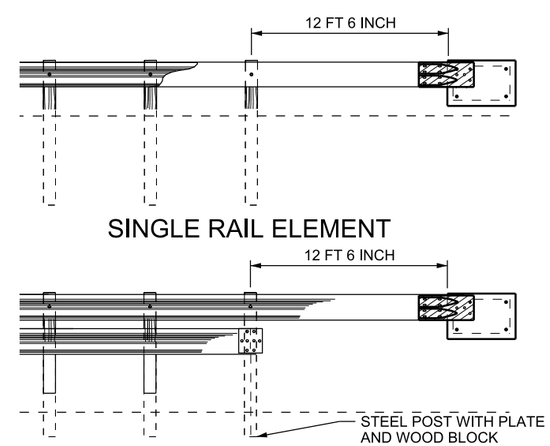


SINGLE RAIL ELEMENT

DOUBLE RAIL ELEMENT

## OPTION II CONCRETE BLOCK

SUPPLEMENTAL DRAWING

REVISIONS

| NO. | DATE | APPR. | REMARKS |
|---|---|---|---|
| 1 | 10/26/2017 | SDD | SQUARE WASHER DETAIL: CORRECTED HOLE DIMENSION. |

**UTAH DEPARTMENT OF TRANSPORTATION**
STANDARD DRAWINGS FOR ROAD AND BRIDGE CONSTRUCTION
SALT LAKE CITY, UTAH

RECOMMENDED FOR APPROVAL — OCT.26, 2017 DATE
CHAIRMAN STANDARDS COMMITTEE APPROVED — OCT.26, 2017 DATE
DEPUTY DIRECTOR

W-BEAM GUARDRAIL BURIED IN BACKSLOPE TERMINAL ANCHOR

STANDARD DRAWING TITLE

STD. DWG. NO.
BA 4F3

DGN File:Q:\Standards\SpecsSection\2017Section\All Supp Issues\Issue # 3 10-26-2017\Drawings\BA04F3.dgn
07-NOV-2017

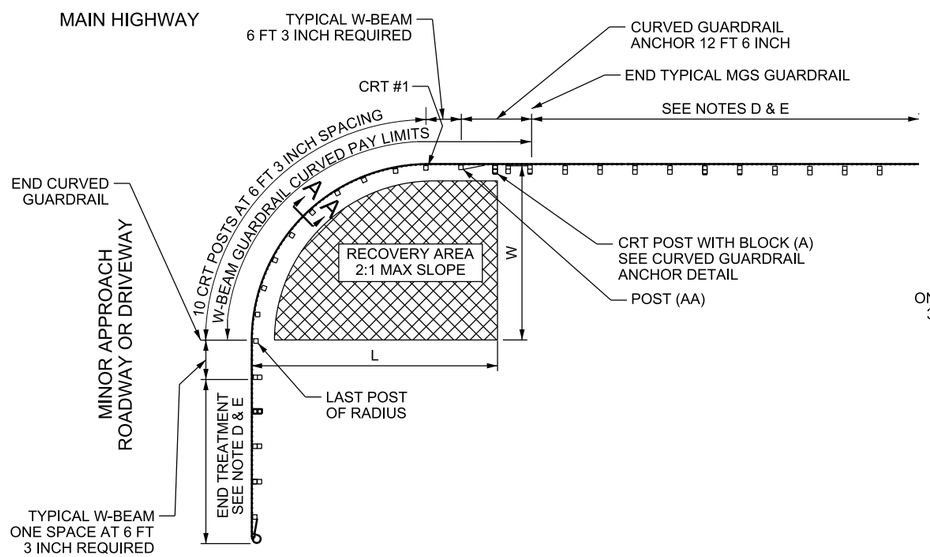


35 FT RADIUS SHOWN

SEE NOTE 5

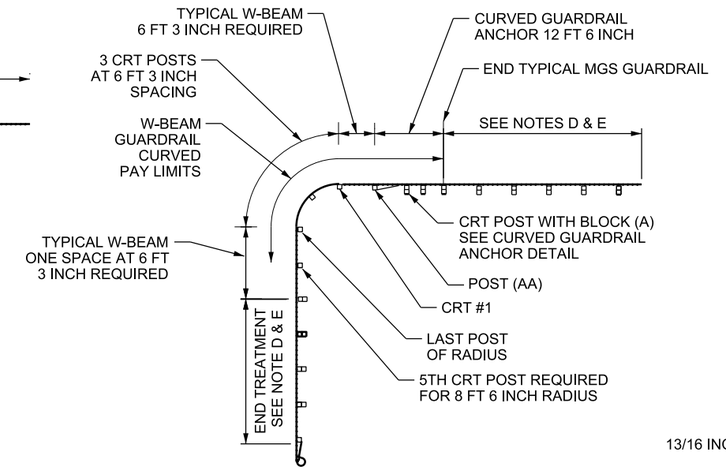


8 FT 6 INCH RADIUS SHOWN

SEE NOTE 5

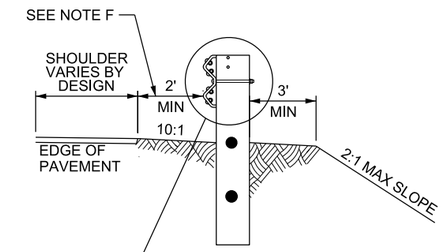


**SECTION A-A**

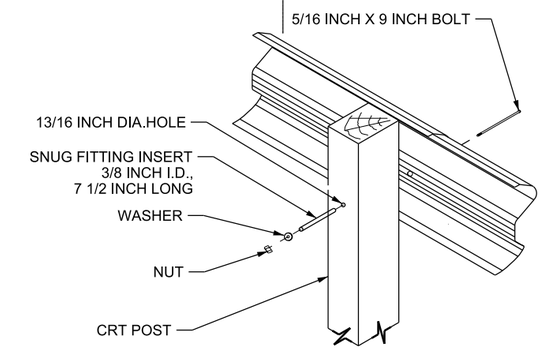


| RADIUS (FT) | TOTAL NO. OF CRT POSTS | REQUIRED AREA FREE OF FIXED OBJECTS | | RADIUS & GR ANCHOR |
|---|---|---|---|---|
| | | L (FT) | W (FT) | PAY LIMIT TOTAL (FT) |
| 8 FT 6 INCH | 5 | 25 | 15 | 32.25 |
| 17 FT | 6 | 30 | 15 | 45.25 |
| 25 FT 6 INCH | 8 | 40 | 20 | 59.25 |
| 35 FT | 11 | 50 | 20 | 74.25 |

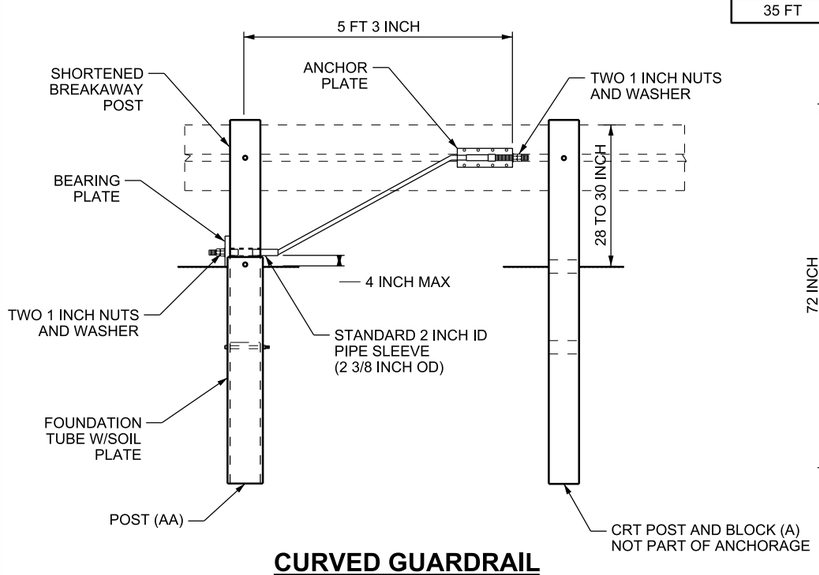


**CURVED GUARDRAIL ANCHOR**

SEE NOTE 4

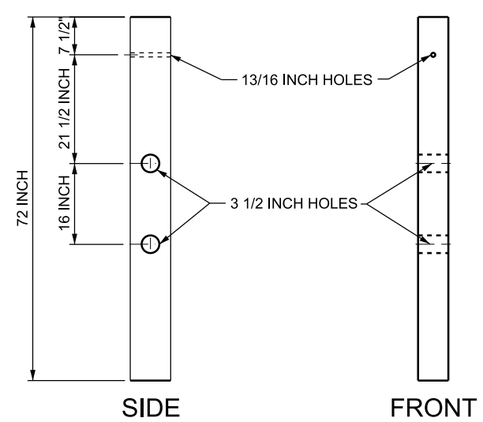


**CONTROLLED RELEASE TERMINAL (CRT) POST (PDE09)**

SEE NOTE 3

**DESIGN-ONLY NOTES:**

A. USE THIS INSTALLATION ONLY WHEN RECOVERY AREA CAN BE MAINTAINED. USE A STRONG POST RADIUS INSTALLATION WHEN RECOVERY AREA CANNOT BE MAINTAINED. STRONG POST RADIUS IS CONSTRUCTED WITH MIDWEST 31 INCH W-BEAM GUARDRAIL, SHOP BENT MGS RAIL AND STANDARD MGS GUARDRAIL COMPONENTS AND IS PAID WITH STANDARD MGS GUARDRAIL ITEMS.

B. LIST RADIUS REQUIREMENT FOR EACH LOCATION IN THE PROJECT PLANS AND SUMMARY SHEET.

C. RECOVERY AREA BEHIND THE GUARDRAIL TO BE MAINTAINED FREE OF FIXED OBJECTS AND 2:1 MAXIMUM SLOPE.

D. USE END TREATMENTS, TYPE "G" OR "H" ON INTERSECTING ROADWAYS OPEN TO THE GENERAL PUBLIC AND BARRIER END IS WITHIN THE CLEAR ZONE. USE ANCHOR TYPE II, REFER TO STD DWG BA 4C2 WHEN CONDITIONS OF ANCHORAGE USE ARE MET. USE ANCHOR TYPE I (REFER TO STD DWG BA 4C1, ON BUSINESS/RESIDENTIAL DRIVEWAYS, OR RESTRICTED/LIMITED ENTRY ROADWAYS.

E. DO NOT ATTACH DIRECTLY TO W-BEAM GUARDRAIL TRANSITION, STD DWG BA 4B1 AND 4B2, INSTALL 18 FT 9 INCH OF TYPICAL W-BEAM GUARDRAIL AT END OF TRANSITION PRIOR TO INSTALLING CURVED GUARDRAIL ANCHOR.

F. THE 2 FT MIN BARRIER OFFSET IS OPTIONAL WHEN ROADWAY DESIGN REQUIRES A 12 FT OR WIDER EFFECTIVE SHOULDER.

**NOTES:**

1. SHOP BEND RADIUS ELEMENTS. FIELD BENDING IS NOT PERMITTED.
2. MAINTAIN 10:1 SLOPE IN FRONT OF CURVED SECTION.
3. MEET REQUIREMENTS OF AASHTO GUIDE TO STANDARDIZED HIGHWAY BARRIER HARDWARE FOR CRT TIMBER POST (PDE09).
4. REFER TO STD DWG BA 4C1 FOR ANCHORAGE COMPONENTS.
5. USE STANDARD G4 GUARDRAIL PANELS WITHIN THE W-BEAM GUARDRAIL CURVED SECTION EXCLUDING THE CURVED GUARDRAIL ANCHOR. SEE STD DWG BA 4F1 FOR STANDARD G4 GUARDRAIL PANELS DETAIL.

SUPPLEMENTAL DRAWING

REVISIONS

| NO. | DATE | APPR. | REMARKS |
|---|---|---|---|
| 1 | 10/26/2017 | SDD | CHANGED RADIUS TO END TREATMENT W-BEAM ELEMENT REQUIREMENT. CHANGED DRAWING NUMBER. |

**UTAH DEPARTMENT OF TRANSPORTATION**

STANDARD DRAWINGS FOR ROAD AND BRIDGE CONSTRUCTION

SALT LAKE CITY, UTAH

RECOMMENDED FOR APPROVAL — OCT 26, 2017 DATE

CHAIRMAN STANDARDS COMMITTEE APPROVED — OCT 26, 2017 DATE

DEPUTY DIRECTOR

W-BEAM GUARDRAIL CURVE BREAKAWAY DETAILS

STANDARD DRAWING TITLE

STD. DWG. NO.

BA 4G1

DGN File: D:\StandardsandSpecsSection\2017Section\All Supp Issues\Issue # 3 10-26-2017\Drawings\BA04G1.dgn

07-NOV-2017

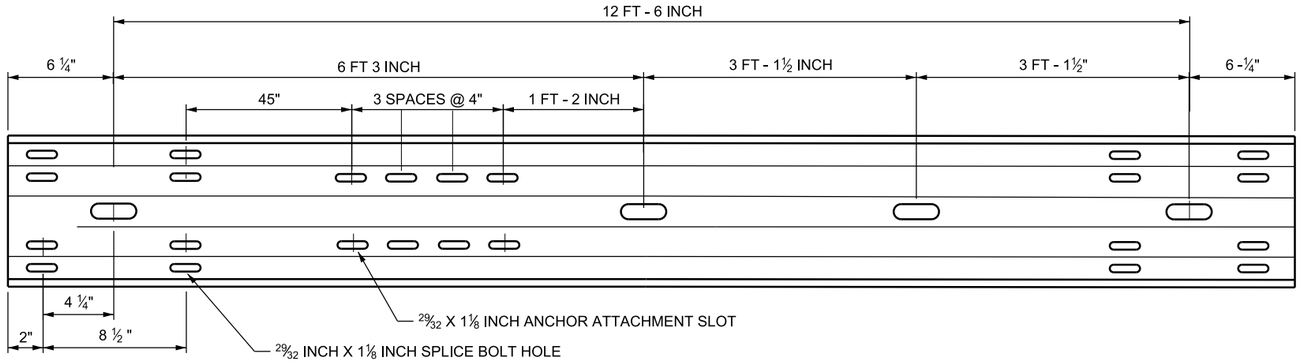


## RAIL ELEMENT

SEE NOTE 1

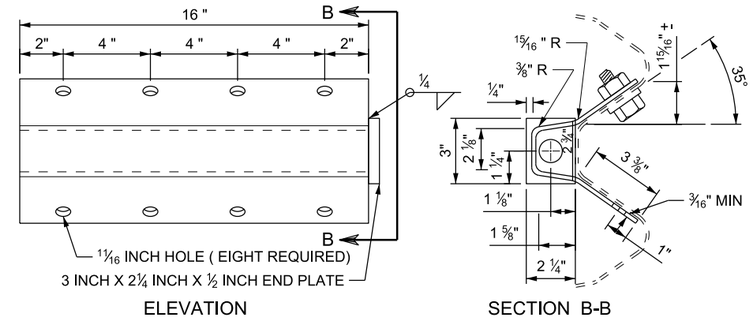


## ANCHOR BRACKET

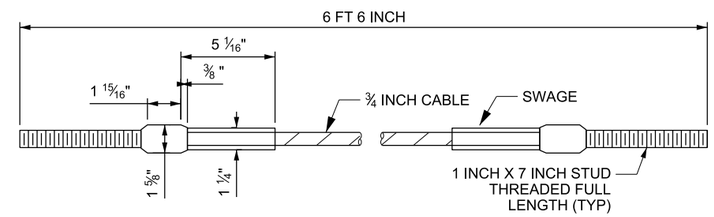


## CABLE ANCHOR ASSEMBLY

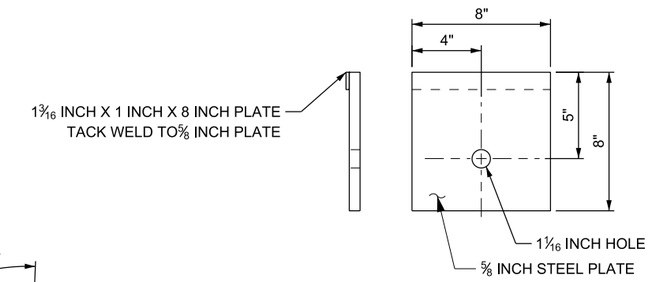


NOTE:
INSTALL BEARING PLATE WITH 5 INCH PORTION UP. SECURE PLATE TO POST USING TWO NAILS AT TOP OF PLATE.

## BEARING PLATE

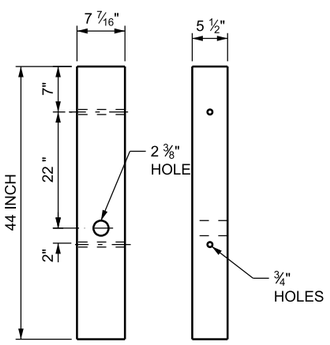


## WOOD BREAKAWAY POST

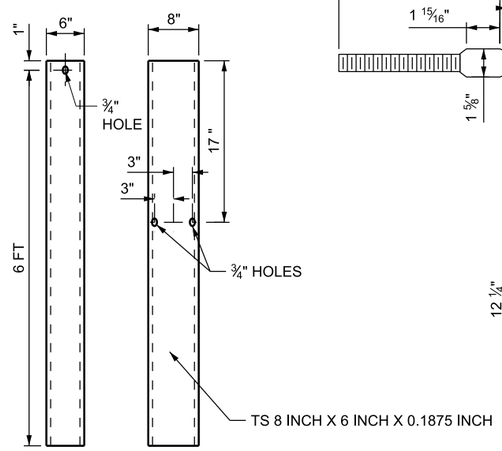


## FOUNDATION TUBE

SEE NOTE 1

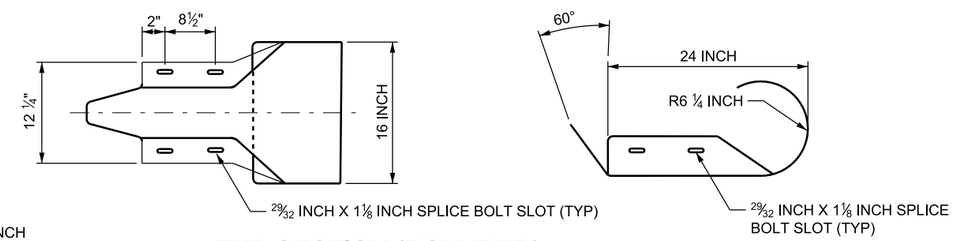


## END SECTION (ROUNDED)

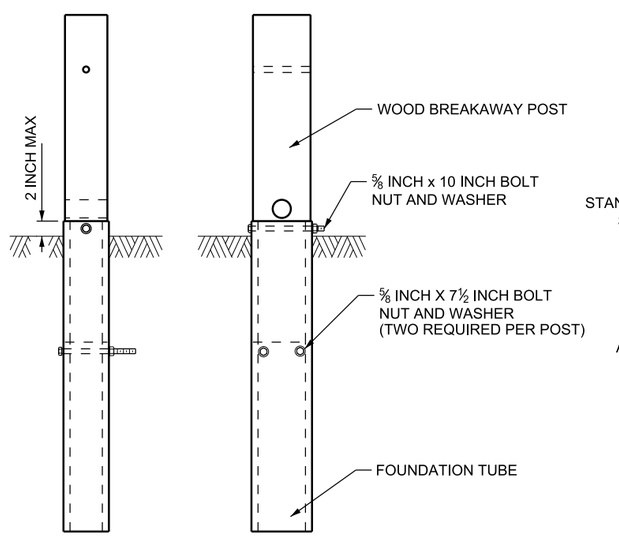


## ANCHOR POST ASSEMBLY

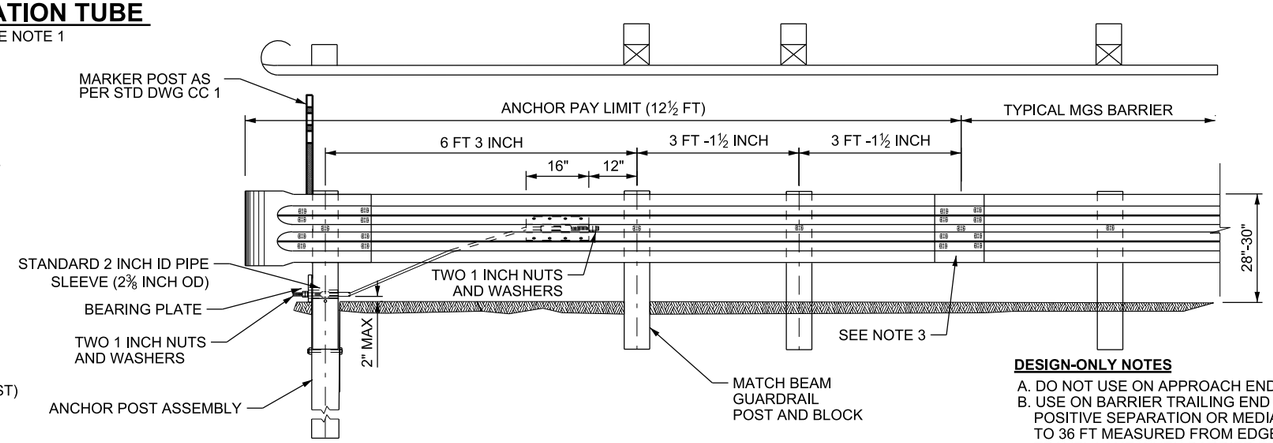


## W-BEAM ANCHOR INSTALLATION

**DESIGN-ONLY NOTES**

A. DO NOT USE ON APPROACH END.
B. USE ON BARRIER TRAILING END ON DIVIDED ROADWAYS WITH A POSITIVE SEPARATION OR MEDIAN WIDTH GREATER THAN OR EQUAL TO 36 FT MEASURED FROM EDGE OF TRAVEL LANE TO EDGE OF TRAVEL LANE WHEN BARRIER END IS OUTSIDE THE MAXIMUM REQUIRED CLEAR ZONE AS DEFINED IN STD DWG DD 18 AND THE AASHTO ROADSIDE DESIGN GUIDE, CURRENT EDITION.

**NOTES:**

1. MANUFACTURE ACCORDING TO AASHTO GUIDE TO STANDARDIZED HIGHWAY BARRIER HARDWARE.
2. INSTALL SPLICE BOLTS ONLY WITHIN THE MID-SPAN SPLICE JOINT. DO NOT INSTALL CENTER BOLT.
3. USE WITH W-BEAM GUARDRAIL CURVED BREAKAWAY ONLY.

SUPPLEMENTAL DRAWING

REVISIONS

| NO. | DATE | APPR. | REMARKS |
|---|---|---|---|
| 1 | 10/26/2017 | SDD | CORRECTED SLOT CALL OUTS TO MEET AASHTO M180. CORRECTED END SECTION ANGLE OF CENTER CORRUGATION. DELETED NOTE 2 & RENUMBERED NOTES. ADDED NOTE 3. CHANGED TITLE & DWG. NO. |

**UTAH DEPARTMENT OF TRANSPORTATION**
STANDARD DRAWINGS FOR ROAD AND BRIDGE CONSTRUCTION
SALT LAKE CITY, UTAH

RECOMMENDED FOR APPROVAL — OCT.26, 2017 DATE
CHAIRMAN, STANDARDS COMMITTEE APPROVED — OCT.26, 2017 DATE
DEPUTY DIRECTOR

CURVED GUARDRAIL ANCHOR
STANDARD DRAWING TITLE

STD. DWG. NO.
BA 4G2

DGN File:D:\StandardsandSpecsSection\2017Section\All Supp Issues\Issue # 3 10-26-2017\Drawings\BA04G2.dgn
07-NOV-2017

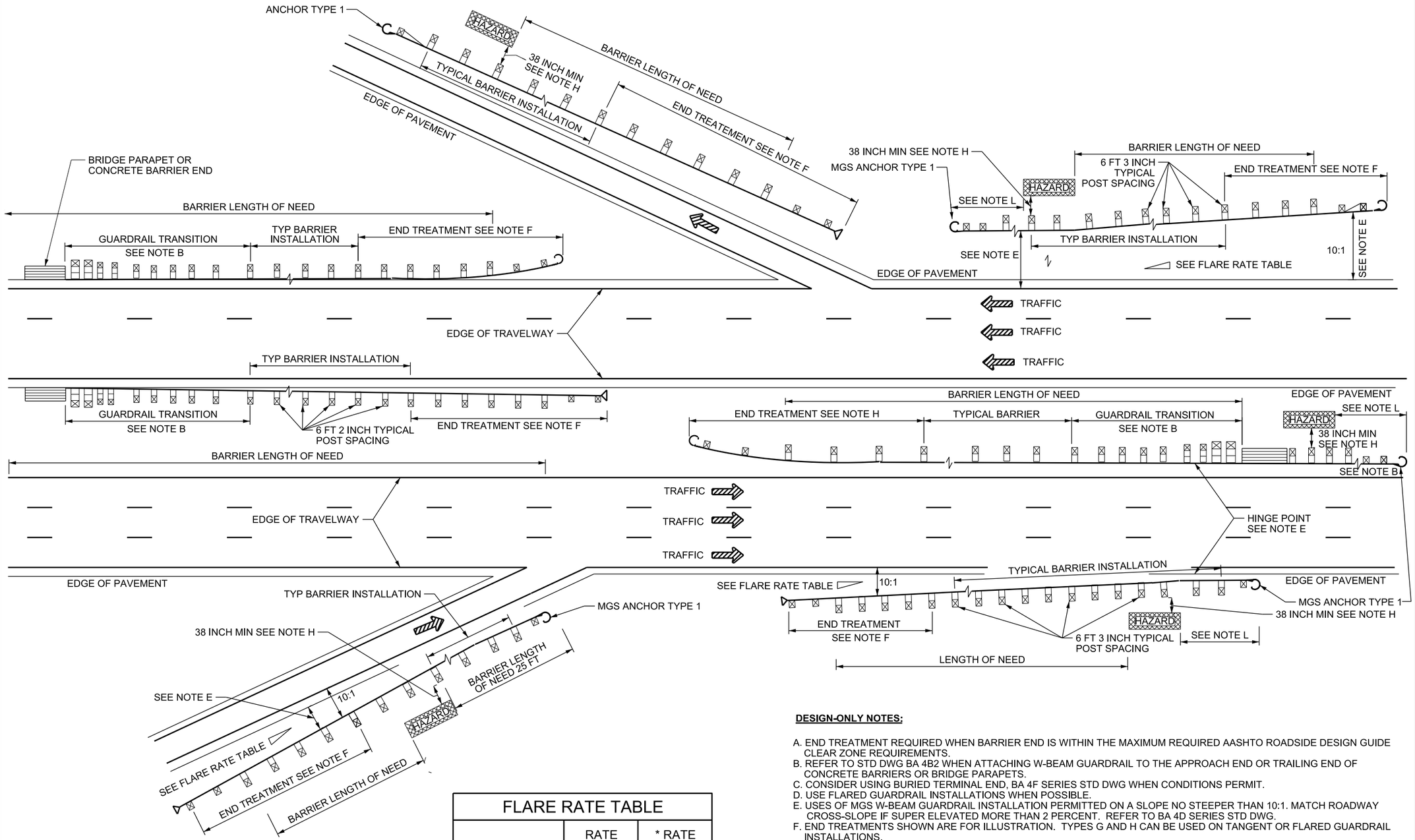


## FLARE RATE TABLE

| SPEED (MPH) | RATE OUTSIDE SHY LINE | * RATE INSIDE SHY LINE |
|---|---|---|
| ≤ 35 | 7:1 | 13:1 |
| 40 | 8:1 | 16:1 |
| 45 | 10:1 | 18:1 |
| 50 | 11:1 | 21:1 |
| 55 | 12:1 | 24:1 |
| 60 | 14:1 | 26:1 |
| 65 | 15:1 | 30:1 |
| ≤ 70 | 15:1 | 30:1 |

* DESIGN EXCEPTION REQUIRED

**DESIGN-ONLY NOTES:**

A. END TREATMENT REQUIRED WHEN BARRIER END IS WITHIN THE MAXIMUM REQUIRED AASHTO ROADSIDE DESIGN GUIDE CLEAR ZONE REQUIREMENTS.
B. REFER TO STD DWG BA 4B2 WHEN ATTACHING W-BEAM GUARDRAIL TO THE APPROACH END OR TRAILING END OF CONCRETE BARRIERS OR BRIDGE PARAPETS.
C. CONSIDER USING BURIED TERMINAL END, BA 4F SERIES STD DWG WHEN CONDITIONS PERMIT.
D. USE FLARED GUARDRAIL INSTALLATIONS WHEN POSSIBLE.
E. USES OF MGS W-BEAM GUARDRAIL INSTALLATION PERMITTED ON A SLOPE NO STEEPER THAN 10:1. MATCH ROADWAY CROSS-SLOPE IF SUPER ELEVATED MORE THAN 2 PERCENT. REFER TO BA 4D SERIES STD DWG.
F. END TREATMENTS SHOWN ARE FOR ILLUSTRATION. TYPES G AND H CAN BE USED ON TANGENT OR FLARED GUARDRAIL INSTALLATIONS.
G. CONSULT GUIDELINES FOR CRASH CUSHIONS AND BARRIER END TREATMENTS CC SERIES STD DWGS FOR PROPER END TREATMENT SELECTION AND INSTALLATION REQUIREMENTS.
H. REFER TO STD DWG BA 4H3 FOR REDUCED DEFLECTION REQUIREMENTS WHEN 38 INCHES CANNOT BE MAINTAINED BEHIND W-BEAM GUARDRAIL POST TO FACE OF HAZARD. USE 42 INCHES DEFLECTION FOR INITIAL LONG POST 2:1 FILL SLOPE INSTALLATION WITH STANDARD POST SPACING
I. RECOVERY AREA IS THAT AREA EXTENDING LATERALLY FROM THE APPROACH END OF THE GUARDRAIL TERMINAL TO THE BEGINNING OF THE LENGTH OF NEED AND OUT TO THE DESIGNED CLEAR ZONE. SLOPES IN THE RECOVERY AREA TO BE DETAILED AT THE SAME SLOPE RATE AS REQUIRED BY THE APPLICABLE DD SERIES STD DWG FOR THE ROADWAY TYPE.
J. PLACE NO NON-YIELDING DEVICES INSIDE RECOVERY AREA.
K. PLACE YIELDING DEVICES , SUCH AS SIGN POST, A MINIMUM OF 75 FT BACK FROM HEAD OF END TREATMENT AND OFFSET MINIMUM OF 10 FT FROM BACK OF TYPICAL W-BEAM BARRIER. REFER TO CC SERIES STD DWG FOR PLACEMENT IN FRONT OF END TREATMENT OR CRASH CUSHION.
L. USE 25 FT BARRIER LENGTH OF NEED MEASURED FROM THE END OF ANCHOR BACK TO HAZARD FOR THE MIDWEST 31 INCH GUARDRAIL (MGS) ANCHOR TYPE 1.

SUPPLEMENTAL DRAWING

DESIGN-ONLY DRAWING

REVISIONS

| NO. | DATE | APPR. | REMARKS |
|---|---|---|---|
| 1 | 10/26/2017 | SDD | ADDED MGS ANCHOR TYPE 1 REQUIREMENTS. ADDED NOTE L. |

**UTAH DEPARTMENT OF TRANSPORTATION**
STANDARD DRAWINGS FOR ROAD AND BRIDGE CONSTRUCTION
SALT LAKE CITY, UTAH

RECOMMENDED FOR APPROVAL — OCT.26, 2017 DATE
CHAIRMAN STANDARDS COMMITTEE APPROVED — OCT.26, 2017 DATE
DEPUTY DIRECTOR

STANDARD DRAWING TITLE
MIDWEST 31 INCH W-BEAM GUARDRAIL TYPICALS DIVIDED ROADWAYS

STD. DWG. NO.
BA 4J1

DGN File: Q:\StandardsandSpecs\Section\2017Section\All Supp Issues\Issue # 3 10-26-2017\Drawings\BA04J1.dgn
07-NOV-2017

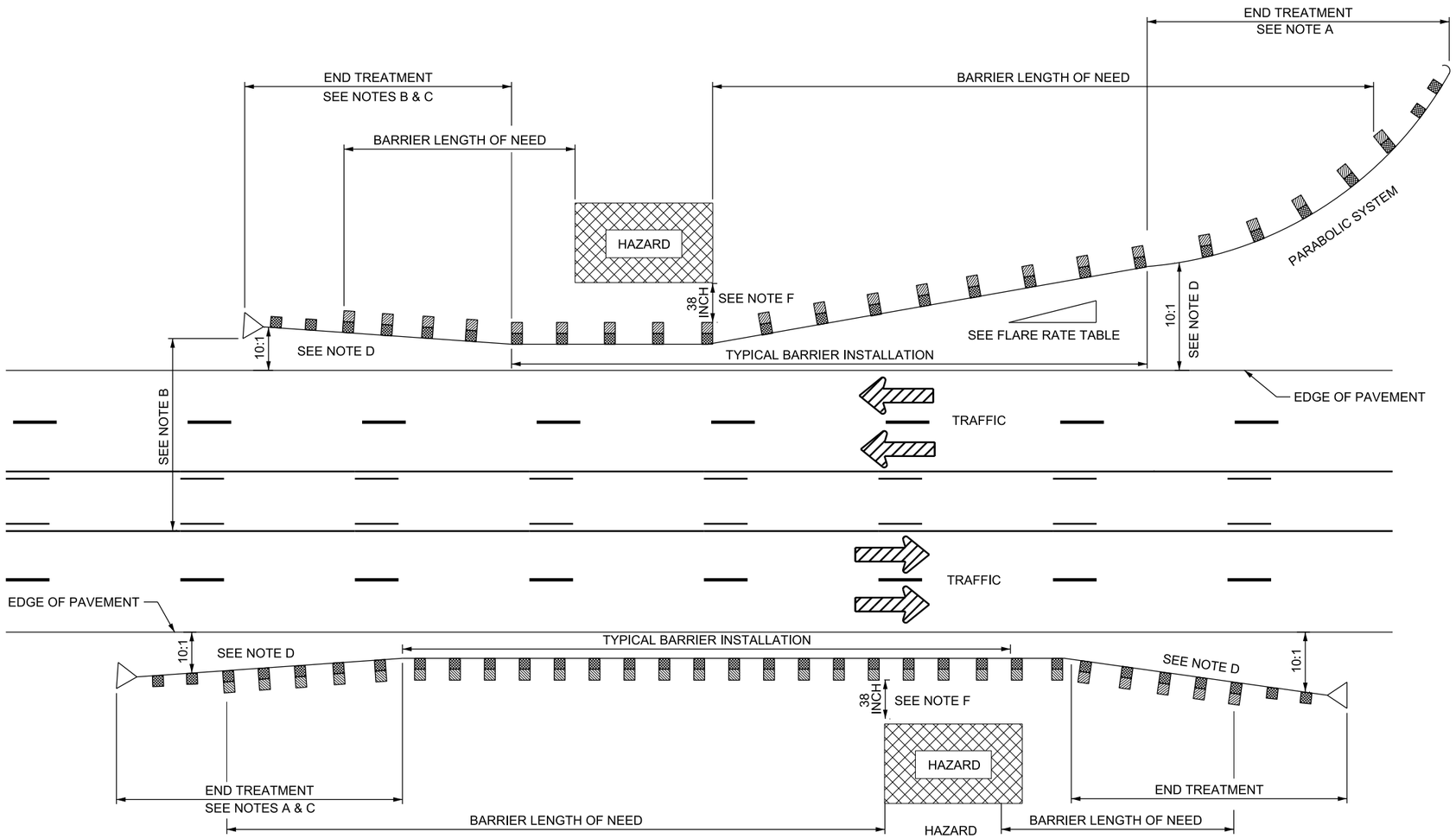


| FLARE RATE TABLE | | |
|---|---|---|
| SPEED (MPH) | RATE OUTSIDE SHY LINE | * RATE INSIDE SHY LINE |
| ≤ 35 | 7:1 | 13:1 |
| 40 | 8:1 | 16:1 |
| 45 | 10:1 | 18:1 |
| 50 | 11:1 | 21:1 |
| 55 | 12:1 | 24:1 |
| 60 | 14:1 | 26:1 |
| 65 | 15:1 | 30:1 |
| ≤ 70 | 15:1 | 30:1 |

* DESIGN EXCEPTION REQUIRED

**DESIGN-ONLY NOTES**

A. APPROACH END:
USE AN APPROVED END TREATMENT, AS APPROVED IN THE GUIDELINES FOR CRASH CUSHION AND BARRIER END TREATMENTS OR A BURIED IN BACK SLOPE TERMINAL (BA 4F SERIES STD DWGS).

B. TRAILING END:
USE AN APPROVED END TREATMENT, AS APPROVED IN THE GUIDELINES FOR CRASH CUSHION AND BARRIER END TREATMENTS OR A BURIED IN BACK SLOPE TERMINAL (BA 4F SERIES STD DWGS ON DIVIDED ROADWAY WITHOUT POSITIVE SEPARATON.

C. END TREATMENT SHOWN ARE FOR ILLUSTRATION. USE TYPE G ON TANGENT GUARDRAIL INSTALLATIONS.

D. USES OF MGS W-BEAM GUARDRAIL AND END TREATMENT INSTALLATION PERMITTED ON A SLOPE NO STEEPER THAN 10:1. MATCH ROADWAY CROSS-SLOPE IF SUPERELEVATED MORE THAN 2 PERCENT. REFER TO BA 4D SERIES STD DWG.

E. CONSULT GUIDELINES FOR CRASH CUSHIONS AND BARRIER END TREATMENTS, CC SERIES STD DWGS FOR PROPER END TREATMENT SELECTION AND INSTALLATION REQUIREMENTS.

F. REFER TO STD DWG BA 4H3 FOR REDUCED DEFLECTION REQUIREMENTS WHEN 38 INCHES CANNOT BE MAINTAINED BEHIND W-BEAM GUARDRAIL POST TO FACE OF HAZARD. USE 42 INCHES DEFLECTION FOR INITIAL LONG POST 2:1 FILL SLOPE INSTALLATION WITH STANDARD POST SPACING.

SUPPLEMENTAL DRAWING

DESIGN-ONLY DRAWING

REVISIONS

| NO. | DATE | APPR. | REMARKS |
|---|---|---|---|
| 1 | 10/26/2017 | SDD | REPLACED ANCHOR TYPE II WITH AN END TREATMENT. CHANGED NOTE B, C, & D. |

**UTAH DEPARTMENT OF TRANSPORTATION**
STANDARD DRAWINGS FOR ROAD AND BRIDGE CONSTRUCTION
SALT LAKE CITY, UTAH

RECOMMENDED FOR APPROVAL — OCT.26, 2017 DATE
CHAIRMAN STANDARDS COMMITTEE APPROVED — OCT.26, 2017 DATE
DEPUTY DIRECTOR

MIDWEST 31 INCH W-BEAM GUARDRAIL TYPICAL MULTILANE ARTERIAL
STANDARD DRAWING TITLE

STD. DWG. NO.
BA 4J2

DGN File:D:\StandardsandSpecsSection\2017Section\All Supp Issues\Issue # 3 10-26-2017\Drawings\BA04J2.dgn
07-NOV-2017

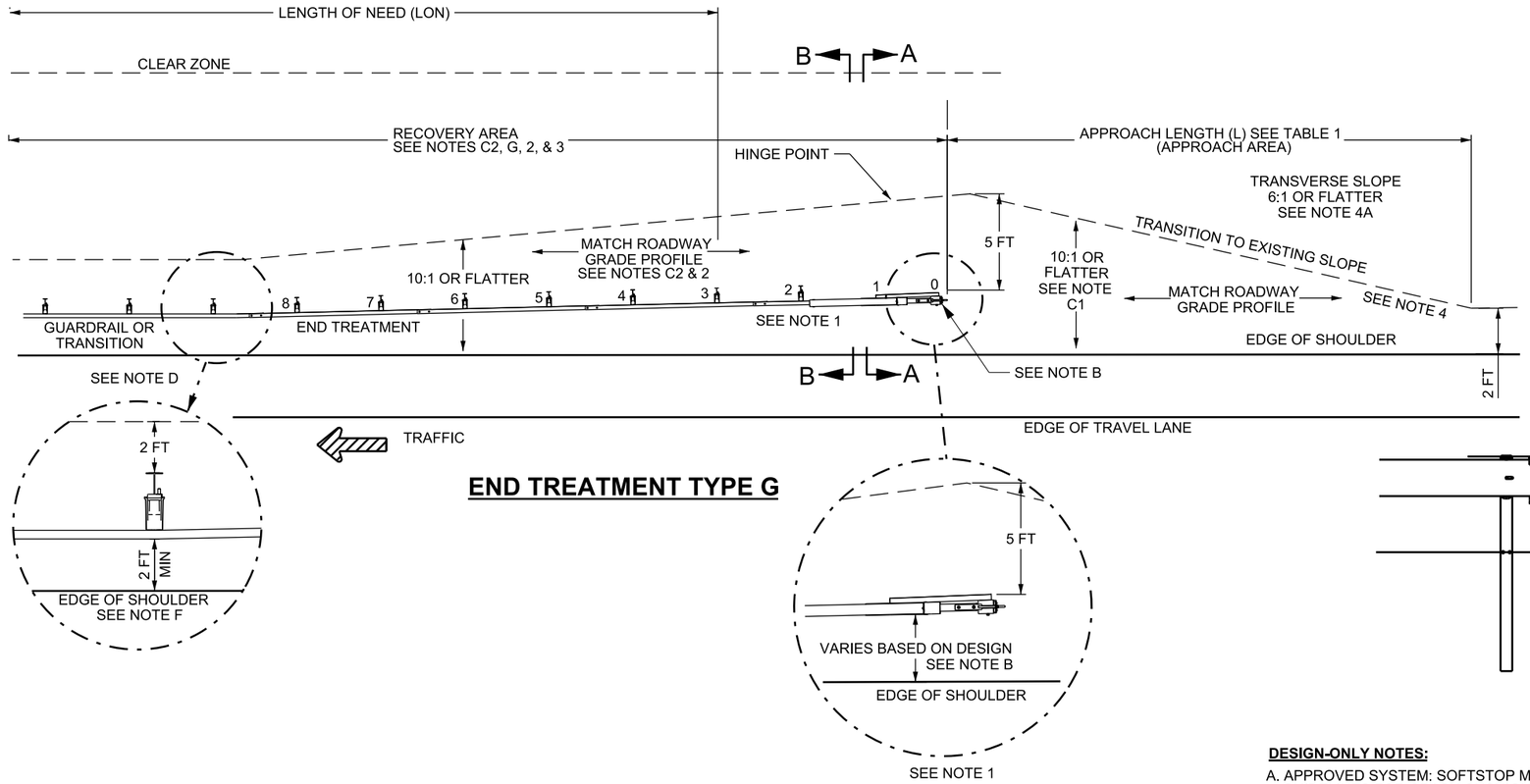


## END TREATMENT TYPE G







| TABLE 1 | |
|---|---|
| SPEED MPH | MIN LENGTH (L) |
| LESS THAN 40 | 50 FT |
| 40 TO 55 | 70 FT |
| 60 TO 80 | 100 FT |

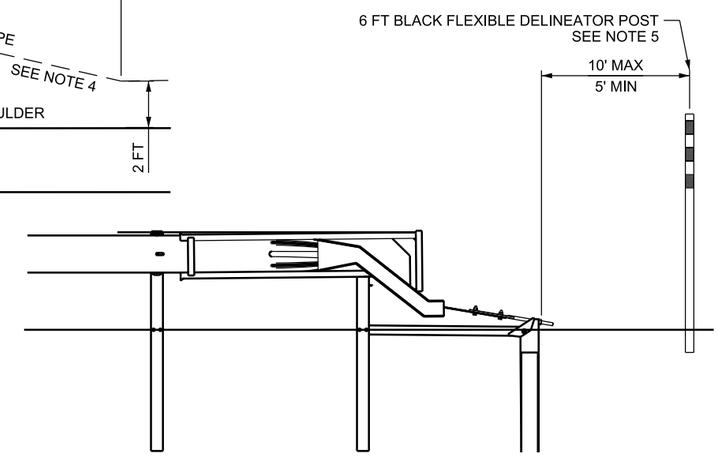


## SYSTEM DELINEATION

SEE NOTE 5

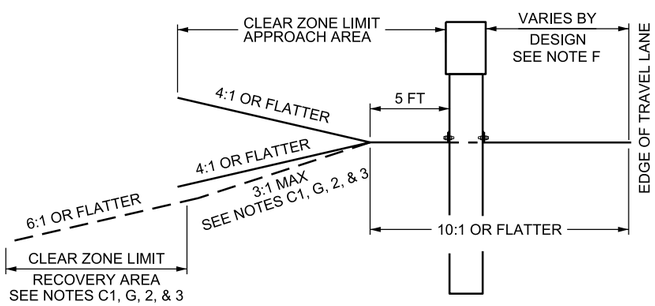


## TYPICAL SECTION A-A

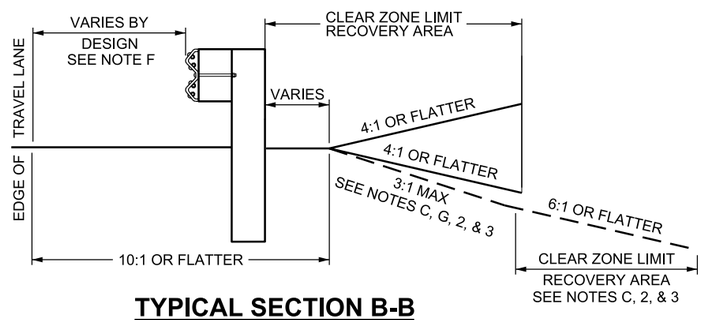


## TYPICAL SECTION B-B

**DESIGN-ONLY NOTES:**

A. APPROVED SYSTEM: SOFTSTOP MANUFACTURED BY TRINITY HIGHWAY PRODUCTS, LLC . REFER TO UDOT GUIDELINES FOR CRASH CUSHIONS AND BARRIER END TREATMENTS FOR SPECIFIC SYSTEM DETAILS.
B. SYSTEM OFFSET:
  1. INSTALL SYSTEM WITH 2 FT OFFSET (25:1 FLARE RATE). SYSTEM TO BE INSTALLED WITH TANGENT BARRIER.
  2. SEE MANUFACTURER'S INSTALLATION MANUAL WHEN DESIGNING FOR A CONVEX OR CONCAVE CURVE.
C. MEET SLOPE REQUIREMENTS IN RECOVERY AREA AS DETAILED IN APPLICABLE DD SERIES STD DWGS. THE ADDITIONAL INFORMATION LISTED BELOW IS THE MINIMUM ACCEPTABLE SLOPE REQUIREMENTS FOR THE APPROACH AREA OF THE END TREATMENT AND THE RECOVERY AREA.
  1. APPROACH AREA: THE AREA PRIOR TO IMPACTING A SYSTEM.
    A) USE 10:1 OR FLATTER FORESLOPES IN APPROACH AREAS.
  2. RECOVERY AREA: THE AREA BEHIND THE END TREATMENT AND BARRIER SYSTEM EXTENDING FROM THE APPROACH END OF THE END TREATMENT TO THE END OF THE CALCULATED LENGTH OF NEED.
    A) USE A 4:1 OR FLATTER FORESLOPE OR BACKSLOPE IN RECOVERY AREA.
    B) USE A 3:1 FORESLOPE IN RECOVERY AREA IF IT IS IMPRACTICAL TO USE A 4:1 FORESLOPE. ESTABLISH A RECOVERY AREA AT THE TOE OF THE 3:1 FORESLOPE OF 6:1 OR FLATTER TO CLEAR ZONE LIMITS. REFER TO STD DWG DD17 AND AASHTO ROADSIDE DESIGN GUIDE FOR ADDITIONAL INFORMATION.
    C) USE A 4:1 OR FLATTER BACKSLOPE IN RECOVERY AREA TO THE CLEAR ZONE LIMIT, IF A 4:1 OR FLATTER BACKSLOPE CANNOT BE PROVIDED A 3:1 IS ACCEPTABLE.
  3. MATCH ROADWAY GRADE PROFILE TO THE HEAD OF THE SYSTEM INSIDE THE APPROACH AREAS.
D. USE GUARDRAIL TRANSITION, BA 4 SERIES STD DWGS, WHEN ATTACHING SYSTEM TO CONCRETE BARRIER OR BRIDGE PARAPET.
E. USE THE AASHTO ROADSIDE DESIGN GUIDE TO ESTABLISH CLEAR ZONE REQUIREMENTS AND LENGTH OF NEED (LON) REQUIREMENTS.
F. 2 FT MINIMUM BARRIER OFFSET IS OPTIONAL WHEN ROADWAY DESIGN REQUIRES A 12 FT OR WIDER EFFECTIVE SHOULDER.
G. DO NOT PLACE SIGNS, POSTS, OR OTHER HAZARDS IN APPROACH AREA. USE BREAKAWAY SIGNS OR POSTS WHEN PLACED IN RECOVERY AREA, AND MAINTAIN A MINIMUM 10 FT CLEARANCE TO THE SIDE AND 25 FT FROM THE REAR OF THE SYSTEM. MITIGATE POTENTIAL HAZARDS IN THE RECOVERY AREA.

**NOTES:**

1. REFER TO MANUFACTURER'S SPECIFICATIONS FOR POST, RAIL ELEMENT, AND POST TO RAIL CONNECTION REQUIREMENTS. HAVE SHOP DRAWING AVAILABLE ON SITE FOR REFERENCE DURING INSTALLATION
2. COMPLETE SLOPE PREPARATION PRIOR TO INSTALLING SYSTEM.
3. CLEAR RECOVERY AND APPROACH AREAS OF ANY FIXED OBJECTS OR HAZARDS.
4. CONSTRUCT PLATFORM AS REQUIRED WHEN THE SPACE IS AVAILABLE EVEN IF THE PLATFORM EXTENDS BEYOND THE CLEAR ZONE REQUIREMENTS. SEE STD DWG CC 8C FOR EXCEPTIONS.
  A) CONSTRUCT 6:1 OR FLATTER SLOPE FOR TRANSVERSE SLOPE FROM APPROACH PAD.
5. DO NOT MOUNT OBJECT MARKER ON THE SOFTSTOP SYSTEM.
  A) INSTALL A 6 FT BLACK FLEXIBLE MARKER POST ACCORDING TO SYSTEM DELINEATION DETAIL. PLACE YELLOW BANDS OF REFLECTIVE SHEETING AS SPECIFIED BY STANDARD SPECIFICATION, PART 2 AT THE TOP OF THE POST WITH A 2 INCH SPACE BETWEEN THE 1ST AND 2ND BAND AND THE 2ND AND 3RD BAND.

SUPPLEMENTAL DRAWING

REVISIONS

| NO. | DATE | APPR. | REMARKS |
|---|---|---|---|
| 1 | 10/26/2017 | SDD | MODIFIED NOTE 1. |

UTAH DEPARTMENT OF TRANSPORTATION
STANDARD DRAWINGS FOR ROAD AND BRIDGE CONSTRUCTION
SALT LAKE CITY, UTAH

RECOMMENDED FOR APPROVAL — OCT.26, 2017 DATE
CHAIRMAN STANDARDS COMMITTEE APPROVED — OCT.26, 2017 DATE
DEPUTY DIRECTOR

GRADING AND INSTALLATION DETAILS SOFTSTOP END TREATMENT TYPE G (MASH)

STANDARD DRAWING TITLE

STD. DWG. NO.
CC 8A

DGN File:Q:\Standards\SpecsSection\2017Section\All Supp Issues\Issue # 3 10-26-2017\Drawings\CC08A.dgn
07-NOV-2017

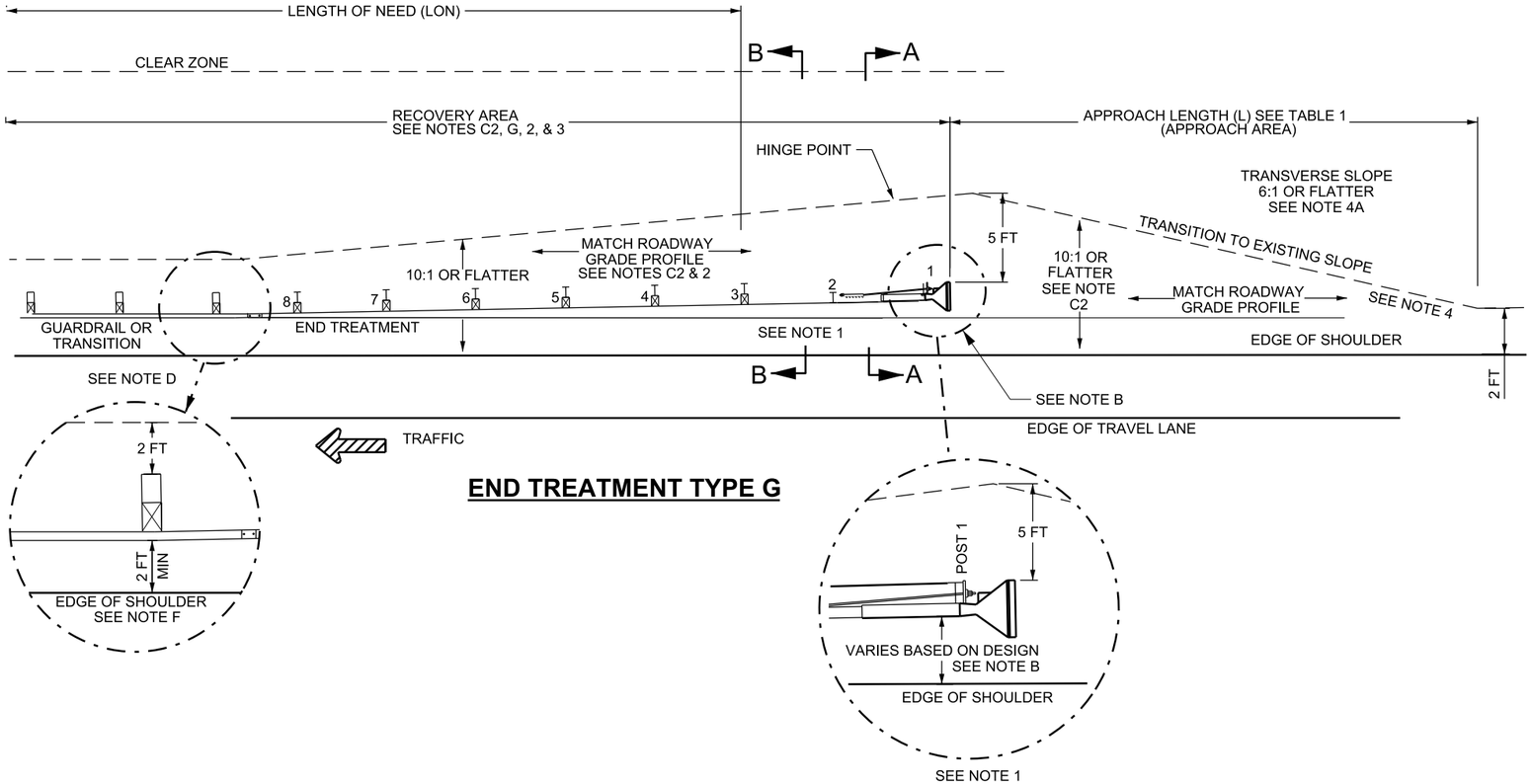


## END TREATMENT TYPE G

| TABLE 1 | |
|---|---|
| SPEED MPH | MIN LENGTH (L) |
| LESS THAN 40 | 50 FT |
| 40 TO 55 | 70 FT |
| 60 TO 80 | 100 FT |

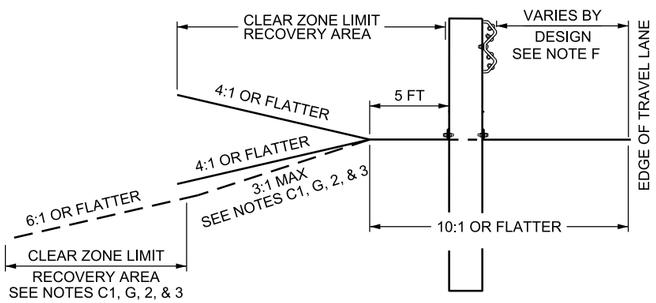


## TYPICAL SECTION A-A

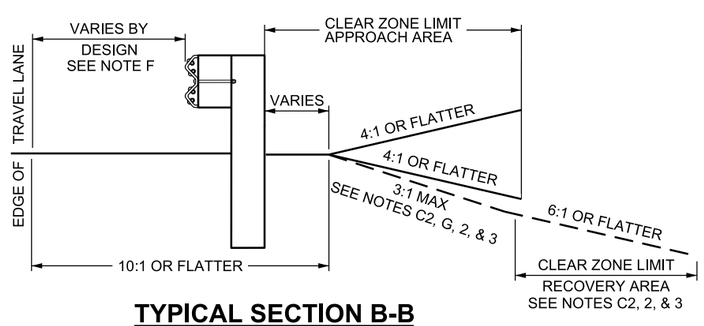


## TYPICAL SECTION B-B

**DESIGN-ONLY NOTES:**

A. APPROVED SYSTEM: MSKT-SP-MGS MANUFACTURED BY ROAD SYSTEMS, INC. REFER TO UDOT GUIDELINES FOR CRASH CUSHIONS AND BARRIER END TREATMENTS FOR SPECIFIC SYSTEM DETAILS.
B. INSTALL SYSTEM WITH 2 FT OFFSET (25:1 FLARE RATE). SYSTEM TO BE INSTALLED WITH TANGENT BARRIER.
C. MEET SLOPE REQUIREMENTS IN RECOVERY AREA AS DETAILED IN APPLICABLE DD SERIES STD DWGS. THE ADDITIONAL INFORMATION LISTED BELOW IS THE MINIMUM ACCEPTABLE SLOPE REQUIREMENTS FOR THE APPROACH AREA OF THE END TREATMENT AND THE RECOVERY AREA.
   1. APPROACH AREA: THE AREA PRIOR TO IMPACTING A SYSTEM.
      A) USE 10:1 OR FLATTER FORESLOPES IN APPROACH AREAS.
   2. RECOVERY AREA: THE AREA BEHIND THE END TREATMENT AND BARRIER SYSTEM EXTENDING FROM THE APPROACH END OF THE END TREATMENT TO THE END OF THE CALCULATED LENGTH OF NEED.
      A) USE A 4:1 OR FLATTER FORESLOPE OR BACKSLOPE IN RECOVERY AREA.
      B) USE A 3:1 FORESLOPE IN RECOVERY AREA IF IT IS IMPRACTICAL TO USE A 4:1 FORESLOPE. ESTABLISH A RECOVERY AREA AT THE TOE OF THE 3:1 FORESLOPE OF 6:1 OR FLATTER TO CLEAR ZONE LIMITS. REFER TO STD DWG DD17 AND AASHTO ROADSIDE DESIGN GUIDE FOR ADDITIONAL INFORMATION.
      C) USE A 4:1 OR FLATTER BACKSLOPE IN RECOVERY AREA TO THE CLEAR ZONE LIMIT, IF A 4:1 OR FLATTER BACKSLOPE CANNOT BE PROVIDED A 3:1 IS ACCEPTABLE.
   3. MATCH ROADWAY GRADE PROFILE TO THE HEAD OF THE SYSTEM INSIDE THE APPROACH AREAS.
D. USE GUARDRAIL TRANSITION, BA 4 SERIES STD DWGS, WHEN ATTACHING SYSTEM TO CONCRETE BARRIER OR BRIDGE PARAPET.
E. USE THE AASHTO ROADSIDE DESIGN GUIDE TO ESTABLISH CLEAR ZONE REQUIREMENTS AND LENGTH OF NEED (LON) REQUIREMENTS.
F. 2 FT MINIMUM BARRIER OFFSET IS OPTIONAL WHEN ROADWAY DESIGN REQUIRES A 12 FT OR WIDER EFFECTIVE SHOULDER.
G. DO NOT PLACE SIGNS, POSTS, OR OTHER HAZARDS IN APPROACH AREA. USE BREAKAWAY SIGNS OR POSTS WHEN PLACED IN RECOVERY AREA, AND MAINTAIN A MINIMUM 10 FT CLEARANCE TO THE SIDE AND 25 FT FROM THE REAR OF THE SYSTEM. MITIGATE POTENTIAL HAZARDS IN THE RECOVERY AREA.

**NOTES:**

1. REFER TO MANUFACTURER'S SPECIFICATIONS FOR POST, RAIL ELEMENT, AND POST TO RAIL CONNECTION REQUIREMENTS. HAVE SHOP DRAWING AVAILABLE ON SITE FOR REFERENCE DURING INSTALLATION
2. COMPLETE SLOPE PREPARATION PRIOR TO INSTALLING SYSTEM.
3. CLEAR RECOVERY AND APPROACH AREAS OF ANY FIXED OBJECTS OR HAZARDS.
4. CONSTRUCT PLATFORM AS REQUIRED WHEN THE SPACE IS AVAILABLE EVEN IF THE PLATFORM EXTENDS BEYOND THE CLEAR ZONE REQUIREMENTS. SEE STD DWG CC 8C FOR EXCEPTIONS.
   A) CONSTRUCT 6:1 OR FLATTER SLOPE FOR TRANSVERSE SLOPE FROM APPROACH PAD.
5. MOUNT OBJECT MARKER POST PER STD DWG CC 1 END TREATMENT TYPE G.

SUPPLEMENTAL DRAWING

REVISIONS

| NO. | DATE | APPR. | REMARKS |
|---|---|---|---|
| 1 | 10/26/2017 | SDD | MODIFIED NOTE B. |

UTAH DEPARTMENT OF TRANSPORTATION
STANDARD DRAWINGS FOR ROAD AND BRIDGE CONSTRUCTION
SALT LAKE CITY, UTAH

RECOMMENDED FOR APPROVAL — OCT.26, 2017 DATE
CHAIRMAN STANDARDS COMMITTEE APPROVED — OCT.26, 2017 DATE
DEPUTY DIRECTOR

GRADING AND INSTALLATION DETAILS MSKT-SP-MGS END TREATMENT TYPE G (MASH)

STANDARD DRAWING TITLE

STD. DWG. NO.
CC 8B

DGN File: Q:\Standardsand\Specs\Section\2017\Section\All Supp Issues\Issue # 3 10-26-2017\Drawings\CC08B.dgn
07-NOV-2017

# USE THIS DETAIL FOR "3R" PROJECTS ONLY

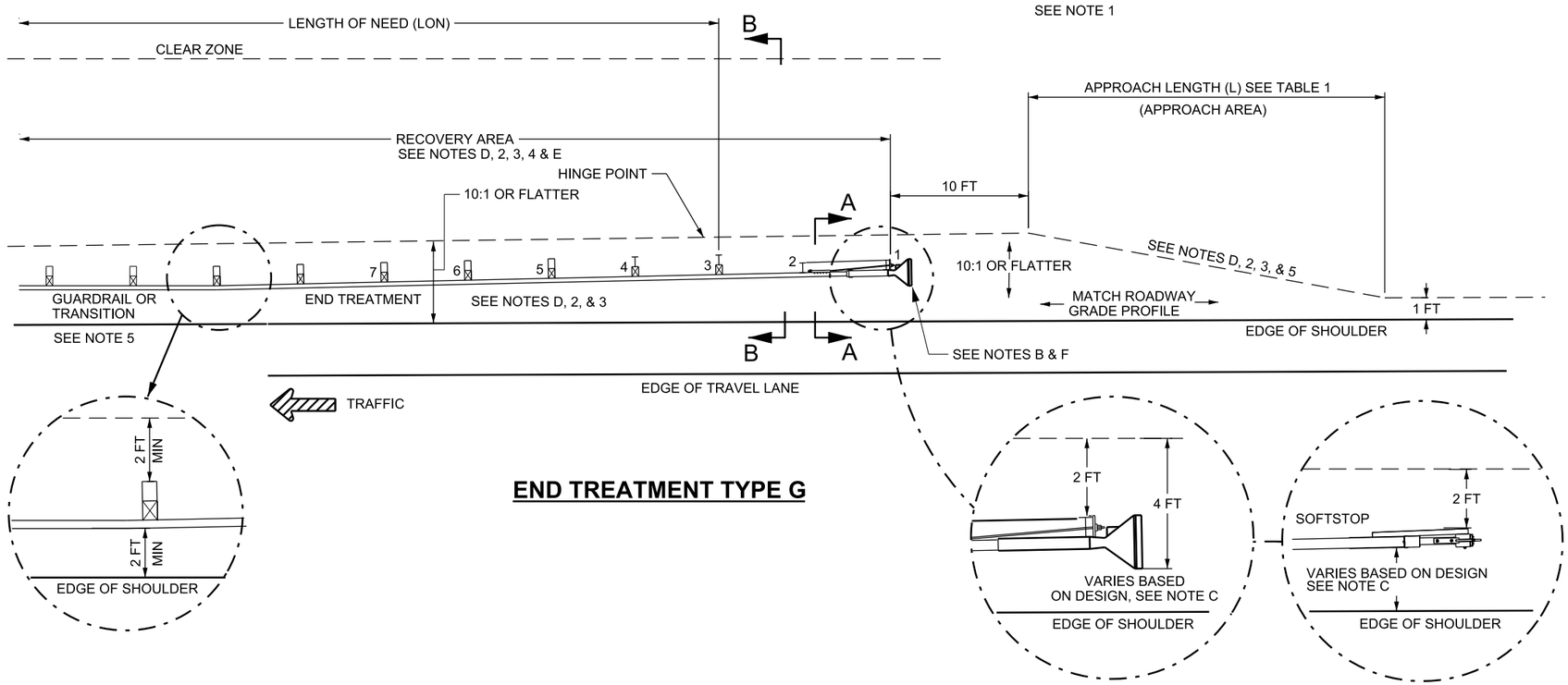


## END TREATMENT TYPE G

| TABLE 1 | |
|---|---|
| SPEED MPH | MIN LENGTH (L) |
| LESS THAN 40 | 50 FT |
| 40 TO 55 | 70 FT |
| 60 TO 80 | 100 FT |

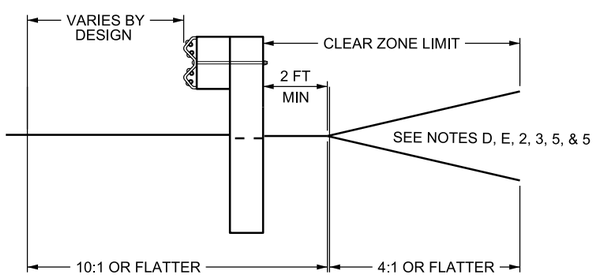


## TYPICAL SECTION B-B

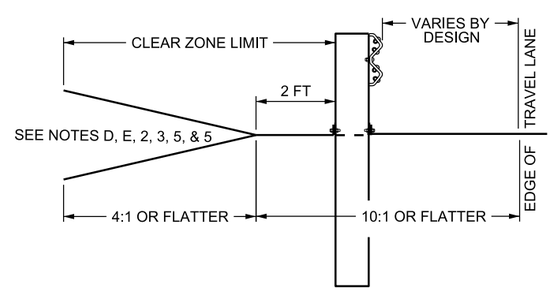


## TYPICAL SECTION A-A

**DESIGN-ONLY NOTES:**

A. USE THIS DRAWING ONLY WHEN THERE IS INSUFFICIENT ROOM TO INSTALL MATERIALS AS REQUIRED IN STD DWG CC 8A AND CC 8B WITHOUT THE PURCHASE OF ADDITIONAL RIGHT OF WAY.
B. APPROVED SYSTEMS: SOFTSTOP MANUFACTURED BY TRINITY HIGHWAY PRODUCTS, LLC. THE MSKT-SP-MGS, MANUFACTURED BY ROAD SYSTEMS INC. REFER TO UDOT GUIDELINES FOR CRASH CUSHIONS AND BARRIER END TREATMENTS FOR SPECIFIC SYSTEM DETAILS.
C. SYSTEM OFFSET:
   1. MSKT-SP-MGS: INSTALL SYSTEM WITH 2 FT OFFSET (25:1 FLARE RATE). SYSTEM TO BE INSTALLED WITH TANGENT BARRIER
   2. SOFTSTOP: INSTALL SYSTEM WITH 2 FT OFFSET (25:1 FLARE RATE). SYSTEM TO BE INSTALLED WITH TANGENT BARRIER. SEE MANUFACTURER'S INSTALLATION MANUAL WHEN DESIGNING FOR A CONVEX OR CONCAVE CURVE.
D. USE 10:1 OR FLATTER SLOPES IN APPROACH AREA. DESIGN RECOVERY AREA SLOPES ACCORDING TO STD DWG CC 8A OR CC 8B WHEN CONDITIONS PERMIT.
   1. RECOVERY AREA IS THE AREA BEHIND THE END TREATMENT AND BARRIER SYSTEM EXTENDING FROM THE APPROACH END OF THE END TREATMENT TO THE END OF THE CALCULATED LENGTH OF NEED.
E. DO NOT PLACE SIGNS, POSTS, OR OTHER HAZARDS IN APPROACH AREA. USE BREAKAWAY SIGNS OR POSTS WHEN PLACED IN RECOVERY AREA, AND MAINTAIN A MINIMUM 10 FT CLEARANCE TO THE SIDES AND REAR OF THE SYSTEM. MITIGATE POTENTIAL HAZARDS IN RECOVERY AREA.
F. USE GUARDRAIL TRANSITION, BA 4 SERIES STD DWGS, WHEN ATTACHING SYSTEM TO CONCRETE BARRIER OR BRIDGE PARAPET.
G. USE THE ROADSIDE DESIGN GUIDE TO ESTABLISH CLEAR ZONE REQUIREMENTS AND LENGTH OF NEED (LON) REQUIREMENTS.

**NOTES:**

1. REFER TO MANUFACTURER'S SPECIFICATIONS FOR POST, RAIL ELEMENT, AND POST TO RAIL CONNECTION REQIRMENTS.
2. COMPLETE SLOPE PREPARATION PRIOR TO INSTALLING SYSTEM.
3. CONSULT ENGINEER FOR ALLOWABLE SLOPES WHEN REQUIREMENTS OF STD DWG CC 8A OR CC 8B CANNOT BE MET.
4. CLEAR RECOVERY AND APPROACH AREAS OF ANY FIXED OBJECTS OR HAZARDS.
5. CONSTRUCT PLATFORM AS REQUIRED WHEN THE SPACE IS AVAILABLE EVEN IF THE PLATFORM EXTENDS BEYOND THE CLEAR ZONE REQUIREMENTS.
6. INSTALL REQUIRED MARKINGS ACCORDING TO STD DWG CC 1. SEE STD DWG CC 8A FOR SOFTSTOP MARKING REQUIREMENTS.

SUPPLEMENTAL DRAWING

REVISIONS

| NO. | DATE | APPR. | REMARKS |
|---|---|---|---|
| 1 | 10/26/2017 | SDD | MODIFIED NOTE B & C. |

**UTAH DEPARTMENT OF TRANSPORTATION**
STANDARD DRAWINGS FOR ROAD AND BRIDGE CONSTRUCTION
SALT LAKE CITY, UTAH

RECOMMENDED FOR APPROVAL — OCT.26, 2017 DATE
CHAIRMAN, STANDARDS COMMITTEE APPROVED — OCT.26, 2017 DATE
DEPUTY DIRECTOR

GRADING AND INSTALLATION DETAILS FOR "3R" PROJECTS END TREATMENT TYPE G

STANDARD DRAWING TITLE

STD. DWG. NO.
CC 8C

DGN File:Q:\Standards&SpecsSection\2017Section\All Supp Issues\Issue # 3 10-26-2017\Drawings\CC08C.dgn
07-NOV-2017

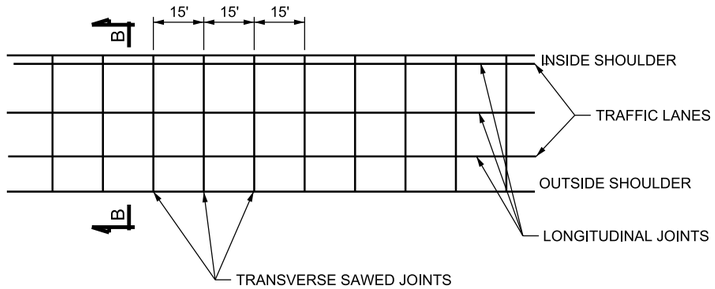


## TYPICAL JOINT LOCATION DETAIL

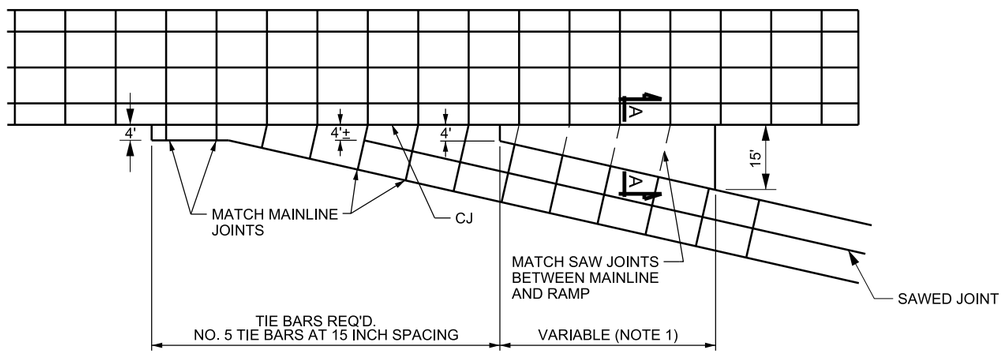


## SHOULDER TRANSITION FOR RAMPS AND RAMP GORE PAVING DETAIL

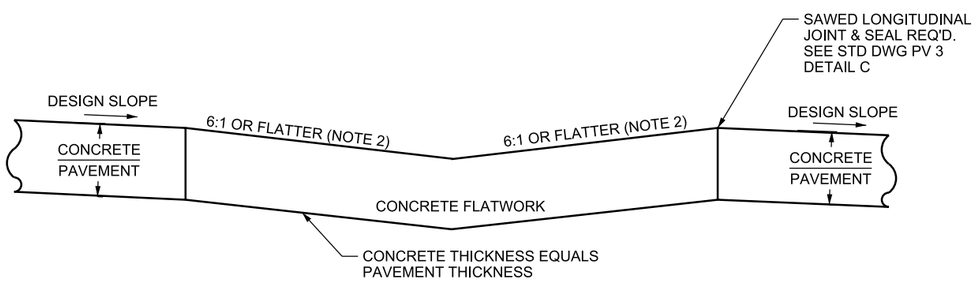


## SECTION A-A

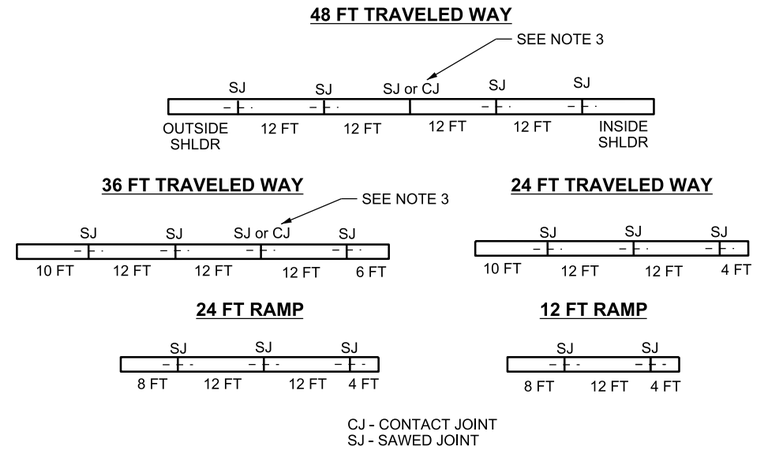


## SECTION B-B
## REQUIRED PAVING CONFIGURATIONS

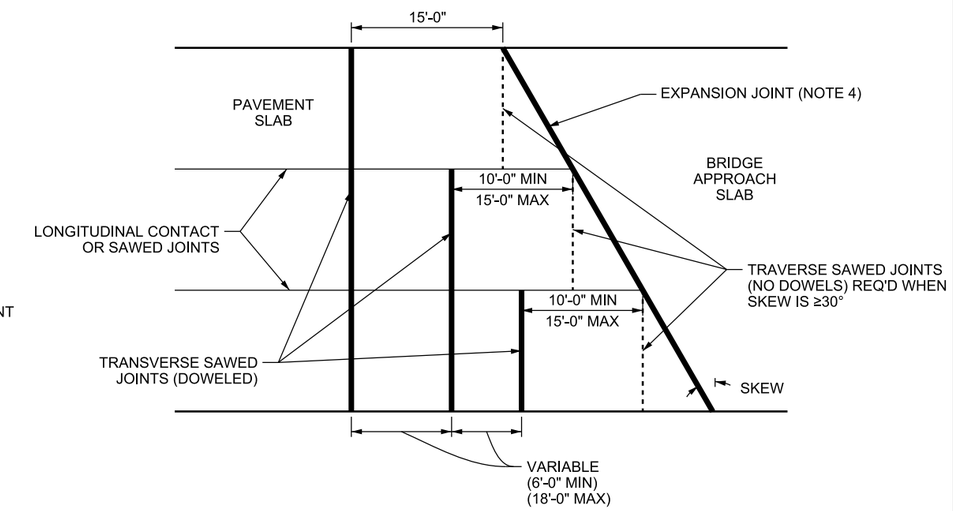


## SKEWED APPROACH SLAB

**NOTES:**

1. ESTIMATED QUANTITIES FOR CONCRETE FLATWORK ARE CALCULATED ON TANGENT SECTION. IN ALL CASES LENGTH OF GORE PAVING WILL BE CARRIED AHEAD UNTIL THE DISTANCE BETWEEN PAVING IS 15 FT.
2. SLOPE MAY VARY TO MEET DESIGN CONDITIONS ON RAMP AND MAINLINE. GRADE TO DRAIN, ADJUST FOR FIELD CONDITIONS.
3. CONTACT JOINT (CJ) TIE BARS REQUIRED AT ALL LOCATIONS WHERE CONCRETE IS TO BE EXTENDED SEE STD DWG PV 2 AND PV 3 FOR JOINT DETAILS.
4. SEE STRUCTURE PLANS FOR EXPANSION JOINT DETAILS.

SUPPLEMENTAL DRAWING

REVISIONS

| NO. | DATE | APPR. | REMARKS |
|---|---|---|---|
| 1 | 10-26-17 | SA | ADDED THE SKEWED APPROACH SLAB DETAILS, CHANGES TO NOTES |

UTAH DEPARTMENT OF TRANSPORTATION
STANDARD DRAWINGS FOR ROAD AND BRIDGE CONSTRUCTION
SALT LAKE CITY, UTAH

RECOMMENDED FOR APPROVAL — OCT. 26, 2017 DATE
CHAIRMAN STANDARDS COMMITTEE — OCT. 26, 2017 DATE
APPROVED
DEPUTY DIRECTOR

JOINTS FOR HIGHWAYS WITH CONCRETE TRAFFIC LANES AND SHOULDERS

STANDARD DRAWING TITLE

STD. DWG. NO.
PV 1

DGN File:Q:\StandardsandSpecsSection\2017Section\All Supp Issues\Issue # 3 10-26-2017\Drawings\PV01.dgn
07-NOV-2017

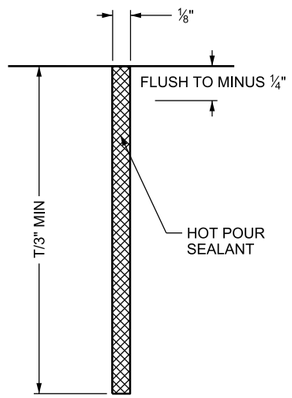


## DETAIL "A"

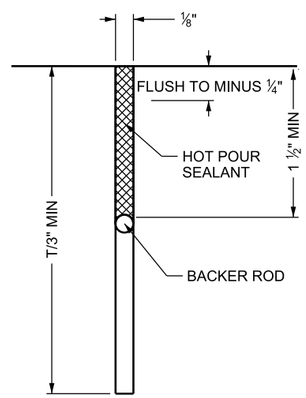


## DETAIL "B"

OPTIONAL INSTALLATION

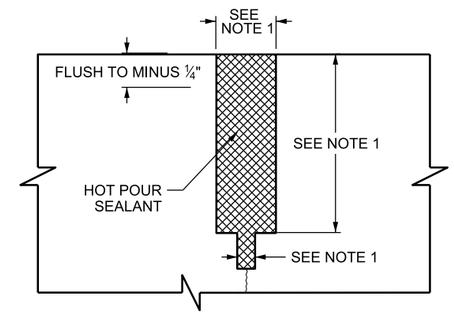


## DETAIL "D"

REHABILITATION OF EXISTING SILICONE JOINT

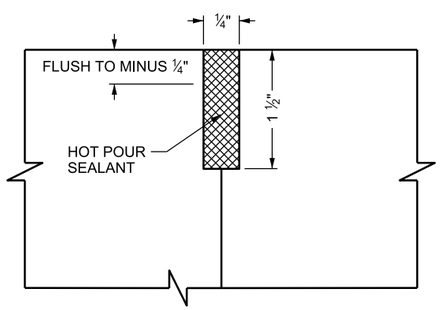


## DETAIL "C"

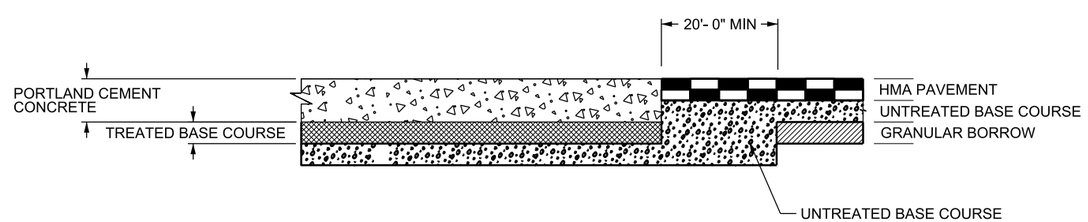


## DETAIL "E"

CONCRETE TO FLEXIBLE PAVEMENT TRANSITION

**NOTES:**

1. DIMENSIONS MAY VARY DEPENDING ON ORIGINAL JOINT CONSTRUCTION.

REVISIONS

| NO. | DATE | APPR. | REMARKS |
|---|---|---|---|
| 1 | 10-26-17 | SA | SHEET NUMBER CHANGED, NOTES |

**UTAH DEPARTMENT OF TRANSPORTATION**

STANDARD DRAWINGS FOR ROAD AND BRIDGE CONSTRUCTION

SALT LAKE CITY, UTAH

RECOMMENDED FOR APPROVAL — OCT. 26, 2017 DATE

CHAIRMAN STANDARDS COMMITTEE APPROVED — OCT. 26, 2017 DATE

DEPUTY DIRECTOR

CONCRETE PAVEMENT DETAILS 1 OF 2

STANDARD DRAWING TITLE

STD. DWG. NO.

PV 2

DGN File:Q:\StandardsandSpecsSection\2017Section\All Supp Issues\Issue # 3 10-26-2017\Drawings\PV02.dgn
07-NOV-2017

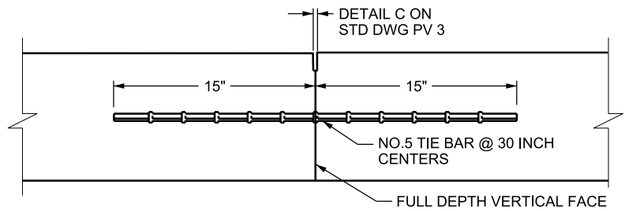


## LONGITUDINAL CONTACT JOINT DETAIL "A"

NOTE: NO. 5 TIE BAR @ 15 INCH CENTERS
IF DRILLED AND EPOXIED.

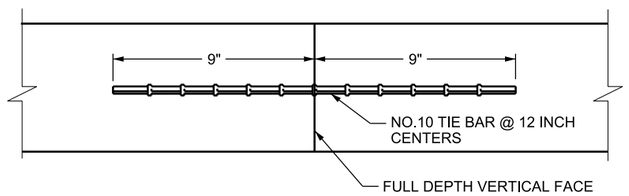


## MID-PANEL CONTACT JOINT DETAIL "B"

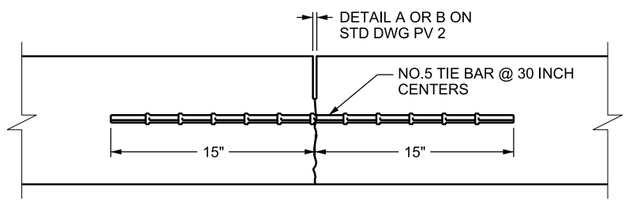


## LONGITUDINAL SAWED JOINT DETAIL "C"

(T/3 SAW CUT W/ AGGREGATE INTERLOCK BELOW)

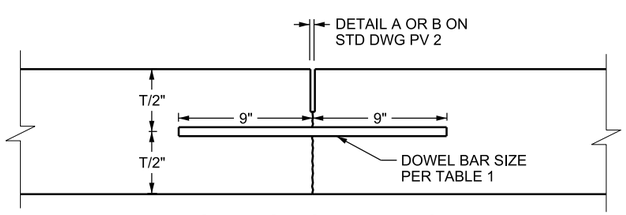


## TRANSVERSE SAWED JOINT (LOAD TRANSFER DOWEL BAR JOINT) DETAIL "D"

INSTALL DOWEL BARS PARALLEL TO THE CENTERLINE
AND TO THE PAVEMENT SURFACE.
LIMIT DEVIATIONS FROM PARALLEL TO ± ¼ INCH
IN THE LENGTH OF THE DOWEL BAR.

## JOINT SECTION DETAILS

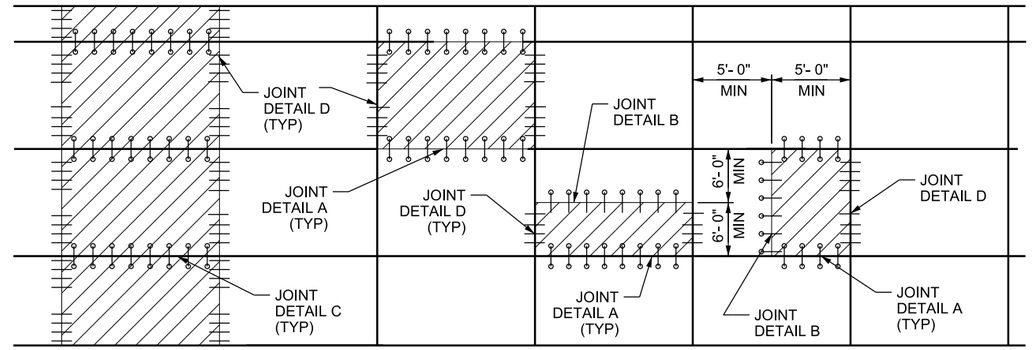


TIE BARS - SEE DETAIL "A" OR "C"

TIE BARS - SEE DETAIL "B"

DOWEL BARS - SEE DETAIL "D" (4 DOWELS PER WHEEL PATH AT 12" SPACING)

## TYPICAL PAVEMENT PANEL REPLACEMENT

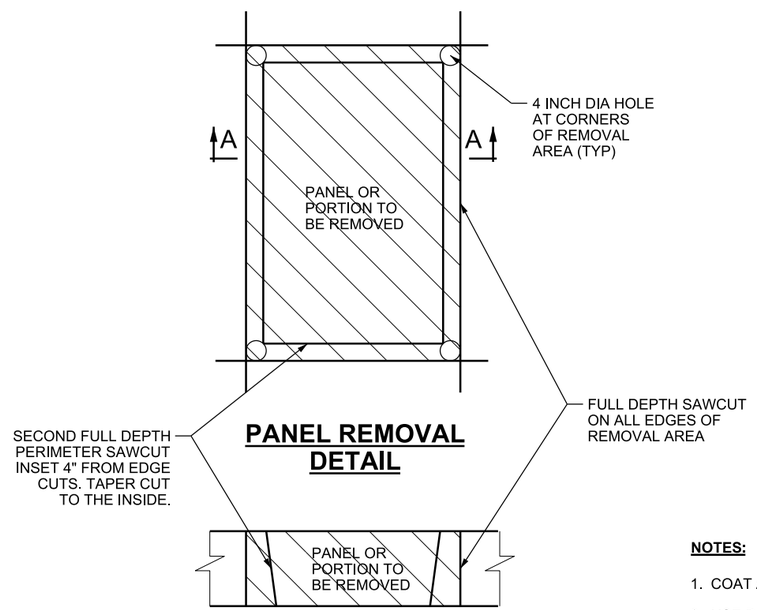


## PANEL REMOVAL DETAIL

## SECTION A-A

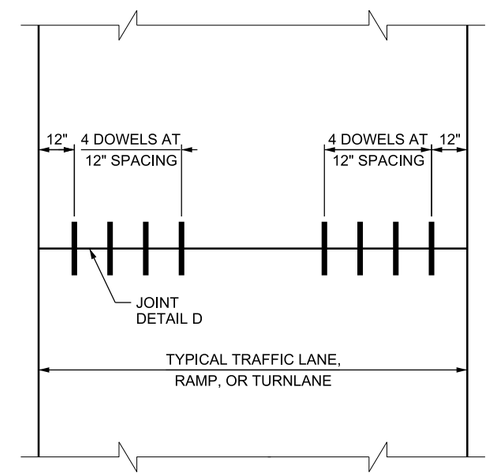


## LOAD TRANSFER DOWEL BAR LAYOUT FOR NEW PAVEMENT

| TABLE 1 | |
|---|---|
| PAVEMENT THICKNESS | DOWEL BAR DIAMETER |
| LESS THAN 9" | 1" |
| ≥ 9" AND < 11" | 1.25" |
| 11" OR GREATER | 1.5" |

**NOTES:**

1. COAT ALL BARS ACCORDING TO STANDARD SPECIFICATION 03211.
2. USE DEFORMED REINFORCING BAR FOR TIE BARS.
3. USE SMOOTH DOWEL BARS.
4. MAKE FULL DEPTH SAWCUT AROUND ALL EDGES OF PANELS OR PORTIONS REPLACED. MINIMIZE OVERCUT INTO ADJACENT PANELS.
5. REPLACE THE ENTIRE PANEL WHEN REPLACING A PARTIAL PANEL IF THE WIDTH OF REMAINING PORTION IS LESS THAN THE MINIMUM SHOWN.
6. DO NOT INSTALL DOWEL BARS IN THE SHOULDERS UNLESS DIRECTED TO DO SO BY THE PROJECT SPECIFIC SPECIAL PROVISION OR PLAN SHEET.
7. PARTIAL PANEL REPLACEMENTS APPLY ONLY TO THE REHABILITATION OF EXISTING PAVEMENTS AND NOT TO PROJECTS CONSTRUCTING NEW OR ORIGINAL PAVEMENT. REPAIRS TO PAVEMENT ON NEW PROJECTS REQUIRE FULL PANEL REPLACEMENT.
8. ELIMINATE TIE BARS THAT INTERFERE WITH "LOAD TRANSFER DOWEL BARS".

REVISIONS

| NO. | DATE | APPR. | REMARKS |
|---|---|---|---|
| 1 | 10-26-17 | SA | SHEET NUMBER CHANGED, NOTES AND DETAIL TITLES CHANGED |

UTAH DEPARTMENT OF TRANSPORTATION
STANDARD DRAWINGS FOR ROAD AND BRIDGE CONSTRUCTION
SALT LAKE CITY, UTAH

RECOMMENDED FOR APPROVAL — DATE OCT. 26, 2017
CHAIRMAN STANDARDS COMMITTEE APPROVED — DATE OCT. 26, 2017
DEPUTY DIRECTOR

STANDARD DRAWING TITLE
CONCRETE PAVEMENT DETAILS 2 OF 2

STD. DWG. NO.
PV 3

DGN File: Q:\Standardsand\Specs\Section\2017\Section\All Supp Issues\Issue # 3 10-26-2017\Drawings\PV03.dgn
07-NOV-2017

# Supplemental Issue, February 22, 2018

## Supplemental Specifications

| | |
|---|---|
| 00555M | Prosecution and Progress |
| 00570M | Definitions |
| 01601 | Railroad Company Coordination |
| 02845M | High Tension Cable Barrier |
| 02893M | Overhead Sign/VMS Structure |
| 07105 | Waterproofing Membrane |
| 013553M | ATMS Conduit |

## Supplemental Drawings

| | |
|---|---|
| AT 12 | CCTV Foundations for CCTV Poles |
| BA 4D3 | W-Beam Guardrail Typical Line Post Embedment Special |
| PA 01 | Pedestrian Access **(DELETION)** |
| PA 01 | General Pedestrian Access **(NEW DRAWING)** |
| PA 02 | Pedestrian Access **(DELETION)** |
| PA 02 | Detectable Warning Surface Pedestrian Access **(NEW DRAWING)** |
| PA 03 | Pedestrian Access **(DELETION)** |
| PA 03 | Pedestrian Access Details **(NEW DRAWING)** |
| PA 04 | Pedestrian Access **(DELETION)** |
| PA 04 | Perpendicular and Blended Transition Pedestrian Access **(NEW DRAWING)** |
| PA 05 | Pedestrian Access **(DELETION)** |
| PA 05 | Parallel Pedestrian Access **(NEW DRAWING)** |
| PA 06 | Roundabout, Transit Shelter, and On Street Parking **(NEW DRAWING)** |
| SL 6A | Pedestrian Signal Assembly |
| SL 6D | Overhead Flashing Beacon at an Intersection Crosswalk |
| SL 6E | Post-mounted Flashing Beacon at an Intersection Crosswalk |
| SL 6F | Overhead Flashing Beacon at a Midblock Crosswalk |
| SL 6G | Post-mounting Flashing Beacon at a Midblock Crosswalk |
| SN 2C | Wrong Way Signing, Delineation, and Markings for Off Ramps and Divided Highways |
| SN 3 | Speed Reduction Design Sequence |
| SN 5 | Freeway Crossover Signing |
| SN 6 | Object Markers “T” Intersection and Pavement Transition Guide |
| SN 9A | Tubular Steel Sign Mounting Requirements |
| SN 11A | Small Sign Tubular Steel Post Base with Concrete (B1) (Socket System) |
| SN 12A | Slipbase Sign Base (B3) Installation **(Title Change)** |
| SN 13 | Side Mounted Tubular Steel Sign Base |
| SN 14A | Barrier Mounted Tubular Steel Sign Bases 20 SQ FT or Less |
| SN 14B | Barrier Mounted Tubular Steel Sign Bases (B5A and B5B) |
| SN 15B2 | Freeway Sign Post and Foundation Requirements |

**Supplemental Specification**
**2017 Standard Specification Book**

**SECTION 00555M**

# PROSECUTION AND PROGRESS

**Delete Article 1.13 and replace with the following:**

## 1.13 WORK SUSPENSIONS

A. The Engineer may give written notice to suspend all or any portion of work for any reason at any time during the contract for the mutual benefit of the Department and the Contractor. Contract time will not accrue during a work suspension. Do not resume work until notification is received from Engineer.
   1. Submit a request to the Engineer for a contract adjustment for suspensions or delays considered anomalous.
      a. Submit the request within seven calendar days of the notice to resume work.
      b. Contract adjustment is made only for requests submitted within the established time frame.
   2. The Department does not allow adjustments to the contract to the extent that performance would have been suspended or delayed by any other cause or for which an adjustment is provided for or excluded under any other contract term or condition.
   3. Time charges will not accrue during work suspensions.
   4. Contract adjustment is made as specified in Section 00777 if both parties agree that the suspension:
      a. Increased the cost or time required for the performance of the contract.
      b. Resulted from conditions beyond control of the Department or the Contractor.
      c. Was not caused by normal weather.
      d. Was not due to failure to correct conditions unsafe for the workers or the general public

B. Contractor may pursue a claim for additional compensation or contract adjustment if there is disagreement with this Article.

C. Maintain Traffic during a suspension
   1. Prepare the project for traffic flow during anticipated work suspensions.
   2. Maintain all required traffic control devices.
   3. The Department performs snow removal activities on temporary roadways and portions of the project during work suspensions.

4. Repair or replace all work or materials lost or damaged during the suspension.
5. Remove work or materials used for temporary maintenance and complete the project as though the work had been continuous and without interference.
6. The Department pays for maintenance required by events beyond control during work suspensions at contract prices or as extra work.

**Delete Article 1.14 and replace with the following:**

## 1.14 STOP WORK ORDERS

A. Stop Work Order:
   1. The Engineer has the authority to stop work on a project, wholly or in part, when it is determined that the Contractor does not:
      a. Correct conditions unsafe for the project personnel or the public.
      b. Perform work properly or comply with contract provisions.
      c. Comply with the Engineer's orders.
   2. Contract time will continue to accrue during a stop work order. Do not resume work until notification is received from Engineer.
   3. The Engineer will provide a written Stop Work Order, within 24 hours of verbal notification, that describes the reason for ordering work to stop and what actions need to be taken or how conditions need to change before work may resume.
   4. The Engineer will notify the Contractor when to resume work.
   5. Time charges will continue to accrue during periods of stopped work.

B. Work may be stopped for any of the following reasons:
   1. Contractor's failure to comply with the contract.
   2. Contractor's failure to keep insurance coverage according to Section 00820
   3. Contractor's failure to provide workers or equipment
   4. Work is being performed when unsuitable weather or soil conditions exist that are detrimental to the quality of the finished product
   5. Conditions exist that threaten the safety of the workers, public or nearby property.

**Supplemental Specification**
**2017 Standard Specification Book**

**SECTION 00570M**

# DEFINITIONS

**Delete Article 1.7, Paragraph 73 through 95 and replace with the following:**

73. **Stop Work Order** – Notification to cease or hold work on a contract when the Engineer determines that work being performed is not in compliance with the contract or is being performed in an unsafe manner.
74. **Structures** – Buildings, bridges, box culverts, catch basins, cribbings, drop inlets, headwalls, manholes, overhead sign supports, retaining walls, and other similar features.
75. **Subgrade** – The top surface of a roadbed upon which the pavement structure, shoulders, and curbs are constructed.
76. **Subgrade Treatment** – Stabilization of roadbed material.
77. **Subcontractor** – An individual or legal entity to which a Contractor sublets part of the work.
78. **Substantial Completion** – Substantially complete. The day as determined by the Engineer when all of the following have occurred:
    a. The public, (including vehicles and pedestrians), have full and unrestricted use and benefit of the facilities both from the operational and safety standpoint.
    b. Successful completion of the LFOT, successful integration of devices to the Traffic Operations Center and active central communications to all devices.
    c. All safety features are installed and fully functional, including, but not limited to, illumination, signing, pavement markings, all coats of striping paint, barrier, guardrail, impact attenuators, delineators, and all other safety appurtenances.
    d. All remaining pay items in the contract are complete in addition to safety features. Only minor corrective work and replacement of temporary substitute facilities remains for physical completion.
    e. The Contractor and Engineer mutually agree that all work remaining will be performed without lane closures, trail or sidewalk closures, and further delays, disruption, or impediment to the public.

79. **Substructure** – The system of bridge elements that support the superstructure. The substructure transfers the loads to the earth and retains material behind the supports. Substructure elements include abutments, bents, footings, piles, wingwalls, backwalls, etc.
80. **Superintendent** – The Contractor's authorized employee in responsible charge of work.
81. **Superstructure** – The system of bridge elements that spans the feature being crossed. The superstructure rests on the substructure. The superstructure includes the deck, parapets and girders, or other support elements (for example, trusses, arches, box girders).
82. **Surety** – The legal entity or individual, other than the Contractor, executing a bond furnished by the Contractor.
83. **Suspend Work –** Notification to cease or hold work on a contract when the Engineer determines that delaying the work would be beneficial to both the Contractor and the Department.
84. **Temporary Works** – Facilities that are generally designed by the Contractor and employed by the Contractor in the execution of the work and whose failure to perform properly could adversely affect the character of the contract work or endanger the safety of adjacent facilities, property, workers, or the public. Such facilities include but are not limited to falsework, forms and form travelers, cofferdams, shoring, water control systems, and temporary bridges.
85. **Time-Related Cost (time component)** – A bid item that identifies a daily value based on user costs or liquidated damages. Time value is the sum of the products of the time-related cost rates multiplied by the time bid by the Contractor to achieve the contract milestones.
86. **Traveled Way** – The portion of the roadway designated for the movement of vehicles, excluding shoulders and auxiliary lanes.
87. **Unbalanced Bid**
    a. **Mathematically Unbalanced** – A bid containing lump sum or unit bid items that do not include reasonable actual costs plus a reasonable proportionate share of the proposer's anticipated profit, overhead costs, and other indirect costs.
    b. **Materially Unbalanced** – A mathematically unbalanced bid that generates a reasonable doubt that awarding the contract to the proposer will result in the lowest ultimate cost to the Department.
88. **Unsuitable Material** - Material not meeting specifications, organic materials, materials that are soft, springy or otherwise yielding, frozen lumps, soils such as peat or bog, and over-saturated silts, clays, or sands whose water content prevents appropriate compaction.

89. **Unusually Severe Weather** – Adverse weather (such as unusually heavy rain or snow, or unusually high or low temperatures) which at the time of year in which it occurred is unusual for the project site, and is more severe than any that might be anticipated for the project location during the period of expected performance as compared to the averages as reported by the Prism Climate Group.

90. **User Costs** – Costs incurred, directly or indirectly, by the traveling public due to construction activities.

91. **Utility** – All privately, publicly, or cooperatively owned lines, facilities, and systems for producing, transmitting, or distributing communications, power, heat, gas, oil, water, waste, and storm water not connected with the highway drainage, signal systems, and other products that directly or indirectly serve the public.

92. **Value Engineering Change Proposal** – A change proposed by the Contractor and considered by the Department intended to result in project cost savings to contract pay items without reducing the essential functions and characteristics of the project. Refer to Section 00725.

93. **Well-Graded Material** – Material having an even distribution of different particle sizes. This even distribution of particles of different sizes results in a dense mass upon compaction.

94. **Work** – The elements, activities, and incidentals necessary to complete a project (including labor, materials, equipment, and the interim products and stages attained in the course of reaching completion), and all alterations, amendments, or extensions made by change order or other written orders of the Engineer.

95. **Working Day** – Any calendar day, except:
    a. Contract designated holidays or days restricted in the contract.
    b. Days when the Contractor is specifically required by the contract or letter from the Engineer to suspend operations through no fault of the Contractor.
    c. Days when the Engineer determines that inclement weather or adverse conditions interfere with the progress of the work.
        1) When the Engineer determines that inclement weather prevents the Contractor from working for at least 50 percent of the normal working day.
        2) The day may be considered a working day exception even though conditions may improve and the major portion of the day could be considered suitable for operations if weather stops the Contractor's crew from beginning work at the normal starting hour and the crew is released as a result.
    d. Submittals and notification requirements are based on a standard 5 day work week.

96. **Working Drawings** – Drawings produced by the Contractor that supplement the contract drawings to provide information not included in the contract documents but that is required to fabricate, erect, transport, or temporarily support the structure or structural elements in the completion of the work. Working drawings do not supersede the contract drawings.
97. **Written Permission of the Engineer** – A letter signed by the Engineer granting specific permission and outlining limitations of the permission.

**Supplemental Specification**
**2017 Standard Specification Book**

**SECTION 01601**

# RAILROAD COMPANY COORDINATION

**Delete Section 01601 and replace with the following:**

## PART 1 GENERAL

### 1.1 SECTION INCLUDES

A. Coordination with railroad companies and estimated flagging rates.

### 1.2 RELATED SECTIONS Not Used

### 1.3 REFERENCES Not Used

### 1.4 DEFINITIONS Not Used

### 1.5 SUBMITTALS

A. Provide a copy of the executed Contractor's Right of Entry agreement.

### 1.6 RAILROAD – HIGHWAY PROVISIONS

A. The Department coordinates with the Railroad Company for new crossings or for existing crossings within the limits of the work.

B. Determine the required cost of railroad flagging.
   1. Table 1 may be used to estimate flagging charges:

Table1

| Estimated Railroad Flagging Rates (includes per diem and weekend rates) | | |
|---|---|---|
| On Site Hours | Total Billable Hours * | Total Cost |
| 8 hours flagging | 12 total hours* | $1,490 |
| 10 hours flagging | 14 total hours* | $1,719 |
| 12 hours flagging | 16 total hours* | $1,977 |
| * The Total Billable Hours column includes an additional 4 hours for set up and take down. | | |

2. The Department deducts for railroad flagging. The Department pays the Railroad Company directly for verified billings.

C. Execute a Contractor's Right of Entry Agreement with the Railroad Company before performing work within the railroad right-of-way.
   1. Obtain insurance required under the Contractor's Right of Entry Agreement.

D. Hold a pre-activity meeting at least 30 days before beginning construction work on railroad right-of-way and give written notice to the Manager of Industry and Public Projects or equivalent position for the Railroad Company. Coordinate a work schedule based on the actual date both parties can begin work. Refer to contract documents for names of Railroad Companies.

E. Give at least 48 hours verbal notice to the Railroad Company's Manager of Track Maintenance or equivalent position responsible for the area the project is in for permission to begin work.

**PART 2 PRODUCTS Not Used**

**PART 3 EXECUTION Not Used**

END OF SECTION

**Supplemental Specification**
**2017 Standard Specification Book**

**SECTION 02845M**

# HIGH TENSION CABLE BARRIER

**Delete Article 1.5, paragraph E and replace with the following:**

E. Installation details, parts list, and contacts
   1. Furnish the following before physical completion:
      A. Four sets of system installation details and parts list.
      B. Supply parts to the location determined by the Engineer 48 hours of notification.
      C. List and contact information for repair part suppliers.
      D. List of Utah-based, manufacturer-trained installers.
      E. High Tension Cable Gauge capable of measuring cable tension for Department repairs.

**Delete Article 2.2, paragraph J and replace with the following:**

J. High Tension Cable Gauge
   1. Furnish gauge capable of measuring cable tension during initial installation.

**Supplemental Specification**
**2017 Standard Specification Book**

**SECTION 02893M**

# OVERHEAD SIGN/VMS STRUCTURE

**Delete subparagraph 2.1 B6 and replace with the following:**

6. Stainless steel machine screws, nuts, and washers
   a. Refer to ASTM A 493 for stainless steel machine screws 18-8 with round heads.
   b. Nylon flat washer
      1) Refer to ASTM D 4066.
      2) White or clear in color.
   c. Refer to ASTM A 193 for stainless steel washers.
   d. Refer to ASTM F 594 for stainless steel nylon lock nuts

**Add the following to Article 2.2:**

K. Attach the sign to the frame using stainless steel machine screws, nuts and washers.
   1. Tighten nuts to achieve contact between sign panels and frame.
   2. Do not damage the reflective sheeting by over-tightening.

**Delete paragraph 3.2 B and replace with the following:**

B. Meet vertical clearance requirements as shown during construction.

**Delete paragraph 3.2 D and replace with the following:**

D. Establish elevation and orientation of signs, VMS panels, posts and mast arms.

**Delete subparagraph 3.2 E3 and replace with the following:**

3. Fill out Anchor Bolt Certification form in the presence of the Engineer during bolt installation.

**Delete subparagraph 3.2 F2 and 3.2 F2a and replace with the following:**

2. Fill out Bolted Field Splice Certification and Bolted Sign Frame Connection Certification in the presence of the Engineer while the bolts are being placed.

**Delete subparagraph 3.2 I and replace with the following:**

I. Do not allow traffic under a partially erected Overhead Sign/VMS structure.

**Supplemental Specification**
**2017 Standard Specification Book**

**SECTION 07105**

# WATERPROOFING MEMBRANE

Delete Section 07105 and replace with the following:

## PART 1 GENERAL

### 1.1 SECTION INCLUDES

A. Waterproofing membrane for concrete surfaces.

### 1.2 RELATED SECTIONS

A. Section 03934: Structural Pothole Patching

### 1.3 REFERENCES

A. ASTM D 5: Penetration of Bituminous Materials

B. ASTM D 36: Softening Point of Bitumen (Ring-and-Ball Apparatus)

C. ASTM D 146: Sampling and Testing Bitumen-Saturated Felts and Woven Fabrics for Roofing and Waterproofing

D. ASTM D 882: Tensile Properties of Thin Plastic Sheeting

E. ASTM D 3236: Apparent Viscosity of Hot Melt Adhesives and Coating Materials

F. ASTM E 96: Water Vapor Transmission of Materials

G. ASTM E 154: Water Vapor Retarders Used in Contact with Earth Under Concrete Slabs, on Walls, or as Ground Cover

### 1.4 DEFINITIONS **Not Used**

### 1.5 SUBMITTALS

A. Manufacturer's product data sheets and recommended installation instructions.

## 1.6 WEATHER LIMITATIONS

A. Do not work during wet conditions or when the concrete surface or ambient air temperatures are below 50 degrees F.

B. Do not apply the membrane until it has been a minimum of 12 hours since the concrete surface was wet and is dry per the manufacturer's requirements.

# PART 2 PRODUCTS

## 2.1 RUBBERIZED ASPHALT MEMBRANE

A. Characteristics
   1. Laminate form
   2. Heat resistant
   3. Self-adhesive surface protected by special release paper

B. Mechanical Properties – Refer to Table 1:

Table 1

| Mechanical Properties | | |
|---|---|---|
| **Property** | **Value** | **Method** |
| Thickness, inch, minimum | 0.065 | |
| Permeance-Perms, grains/sq ft·hr·inhg | 0.10 | ASTM E 96, Method B |
| Tensile Strength, psi | 50 | ASTM D 882, modified for 1 inch opening |
| Elongation, percent | 75 | ASTM D 882, modified for 1 inch opening |
| Puncture Resistance (Mesh), lb | 200 | ASTM E 154 |
| Pliability, at -15 degrees F | No cracks in mesh or rubberized asphalt when bent 180 degrees over a ¼ inch mandrel | ASTM D 146 |

## 2.2 FIBERGLASS MATTING

A. Weight = 1.5 lb/yd$^2$

## 2.3 BINDER

A. Compatible with the matting material and conforming to the following requirements:

Table 2

| Binder Requirements | | |
|---|---|---|
| **Property** | **Value** | **Method** |
| Penetration, 0.1 mm | 40-82 | ASTM D 5 |
| Softening point, min. | 155 degrees F | ASTM D 36 |
| 380 degrees F. viscosity, cps | 1,000 – 1,800 | ASTM D 3236 |

# PART 3 EXECUTION

## 3.1 PREPARATION

A. Expansion Joint Modification and Joint Closure
   1. Remove the curing cover materials and dry according to manufacturer's recommendations or 48 hours, whichever is greater after concrete placed at expansion joint modifications and joint closures has cured.

B. Concrete Surface
   1. Sandblast to remove asphalt and all other foreign material from the entire concrete surface and sides of the parapet for a height of 4 inches above the concrete deck.
   2. Vacuum or use compressed air to remove all dust and loose material from the concrete surface.
   3. Remove all sharp ridges and projections that can puncture the membrane.
   4. Patch holes or spalled areas in the concrete deck with patching concrete to provide a flat deck surface. Refer to Section 03934.

C. Joints and Cracks
   1. Bond a 12 inch wide strip of woven fiberglass reinforcing to the concrete surface over cracks and cold joints greater than $^{3}/_{16}$ inch wide using a compatible binder.

## 3.2 APPLY MEMBRANE

A. Rubberized asphalt membrane – Follow membrane manufacturer's recommendations for application temperatures, equipment, and procedures.

1. Primer
   a. Use primer furnished by the manufacturer of membrane material.
   b. Apply primer to all surfaces to be covered by the membrane according to the manufacturer's recommended procedure and application rate.
2. Placement
   a. Overlap prefabricated membrane strips at least 4 inches or as required by the Manufacturer.
   b. Place joints in a shingling effect so water will drain effectively.
3. Bonding
   a. Use hand rollers or other satisfactory pressure apparatus on the membrane to assure firm and uniform contact with the primed surfaces.
   b. Use a wide tipped torch to cause tackiness if an adhesive is required to create a good seal at joints.
4. Placement
   a. Place the membrane on the vertical face of the concrete curb to the height of the finished overlay surfacing plus 1 inch.
5. Defects
   a. Protect the entire membrane from developing wrinkles, air bubbles, or other placement defects.
   b. Patch any torn or cut areas and narrow overlaps using a satisfactory adhesive and a piece of membrane.
   c. Extend the patch at least 4 inches beyond any defect.
   d. Bond the patch firmly to the surface.
6. Traffic
   a. Allow only necessary rubber tire vehicles on the membrane.
   b. Do not allow public traffic.
   c. Maintain the membrane in good condition until covered with pavement.
7. Preparation for Overlaying
   a. Apply a bond coat of an acceptable adhesive to the surface of the membrane if required by the membrane manufacturer.

## 3.3 ASPHALT SURFACING OVERLAY

A. Do not place overlay surfacing or backfill until the Engineer has inspected the membrane and authorization has been granted.

B. Do not place the overlay surfacing or backfill until the membrane has cured according to manufacturer's recommendations.
   1. Deposit, spread, roll asphalt material, and backfill so the membrane will not be damaged.

END OF SECTION

**Supplemental Specification**
**2017 Standard Specification Book**

**SECTION 13553M**

# ATMS CONDUIT

**Delete Article 3.2, Paragraph H2 and replace with the following:**

2. Use 6 inches of sand backfill covered with native material in all other areas.

**Delete Article 3.3, Paragraph C3b and replace with the following:**

b. Provide 6 inches of sand backfill above conduit in trench.
   1) Backfill trench above sand to finished grade using native material.
      a) Backfill and tamp in 6 inch lifts.

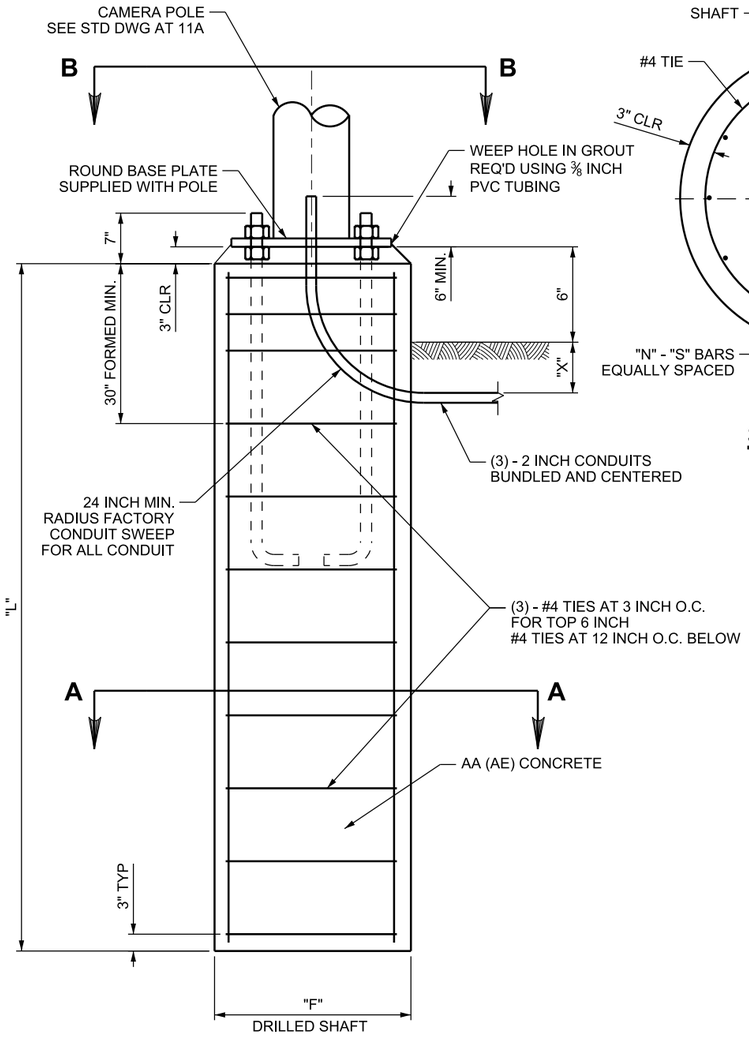


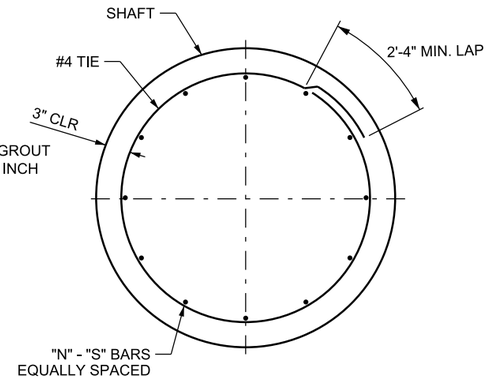


**SECTION A-A**

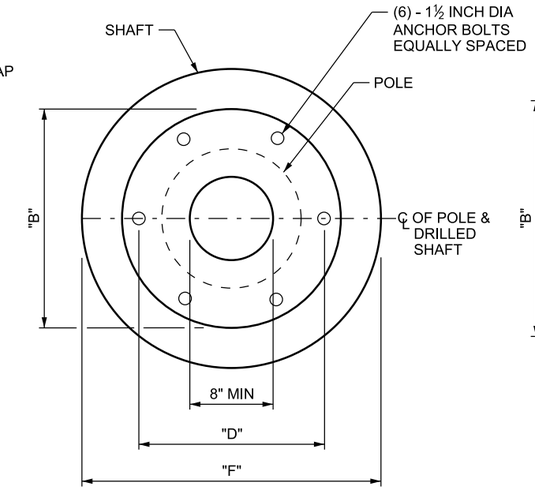


**SECTION B-B**
FOR 45 FT POLES

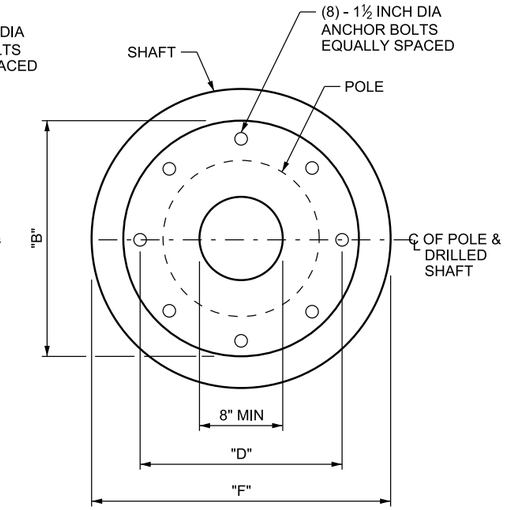


**SECTION B-B**
FOR 60 FT & 75 FT POLES

**TABLE 1 - CONDUIT DEPTH "X"**

| | |
|---|---|
| 18 INCH | IF ENTERING ADJACENT JUNCTION BOX |
| AS REQUIRED BY TABLE 2 OF STD DWG AT 6 | IF NO ADJACENT JUNCTION BOX WITHIN 20 FEET OF POLE |

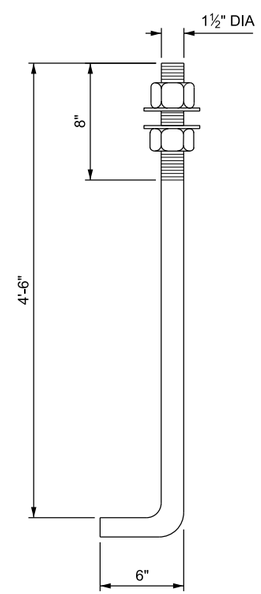


**TABLE 2 - POLE FOUNDATION DIMENSIONS**

| DESCRIPTION | "B" | "D" | "F" | "L" | "N" | "S" |
|---|---|---|---|---|---|---|
| 45 FT CAMERA POLES | 26" | 22" | 36" | 10'-0" | 12 | #6 |
| 60 FT CAMERA LOWERING POLE | 28" | 24" | 42" | 11'-6" | 16 | #6 |
| 75 FT CAMERA LOWERING POLE | 32" | 28" | 42" | 15'-0" | 16 | #6 |

## (A) CCTV POLE FOUNDATION

## (B) ANCHOR BOLT DETAIL

**NOTES:**

1. USE STEEL ANCHOR BOLT TEMPLATES, TOP AND BOTTOM.
2. REFER TO STANDARD SPECIFICATION 16530 GROUNDING REQUIREMENTS.

SUPPLEMENTAL DRAWING

REVISIONS

| NO. | DATE | APPR. | REMARKS |
|---|---|---|---|
| 1 | 2/22/18 | MA | CHANGE NOTE 3 - 2" CONDUITS |

**UTAH DEPARTMENT OF TRANSPORTATION**
STANDARD DRAWINGS FOR ROAD AND BRIDGE CONSTRUCTION
SALT LAKE CITY, UTAH

RECOMMENDED FOR APPROVAL — FEB. 22, 2018 DATE
CHAIRMAN STANDARDS COMMITTEE APPROVED — FEB. 22, 2018 DATE
DEPUTY DIRECTOR

CCTV FOUNDATIONS FOR CCTV POLES
STANDARD DRAWING TITLE

STD. DWG. NO.
AT 12

DGN File:L:\Standard_Drawings\Imperial\2017 Approved_Supplemental_Issues\Supp4Approved FEB_2018\Backup2\AT 12.dgn
06-MAR-2018

| CASE 1<br>POST LENGTH AND<br>DRILLED ROCK FORMULA |
|---|
| 40" - A = B |
| 40" = TYPICAL FULL POST EMBEDMENT<br>A = COMPACTED GRADE MATERIAL<br>(0 INCHES TO 18 INCHES)<br>B = DRILLED ROCK HOLE DEPTH<br>(CUT POST TO MEET DEPTH<br>REQUIREMENT NOT TO<br>EXCEED 24 INCHES. SEE NOTE 3) |

| CASE 2<br>DRILLED ROCK FORMULA |
|---|
| 40" - A = B |
| 40" = TYPICAL FULL POST EMBEDMENT<br>A = COMPACTED GRADE MATERIAL<br>(18 INCHES TO 40 INCHES)<br>B = DRILLED ROCK HOLE DEPTH |

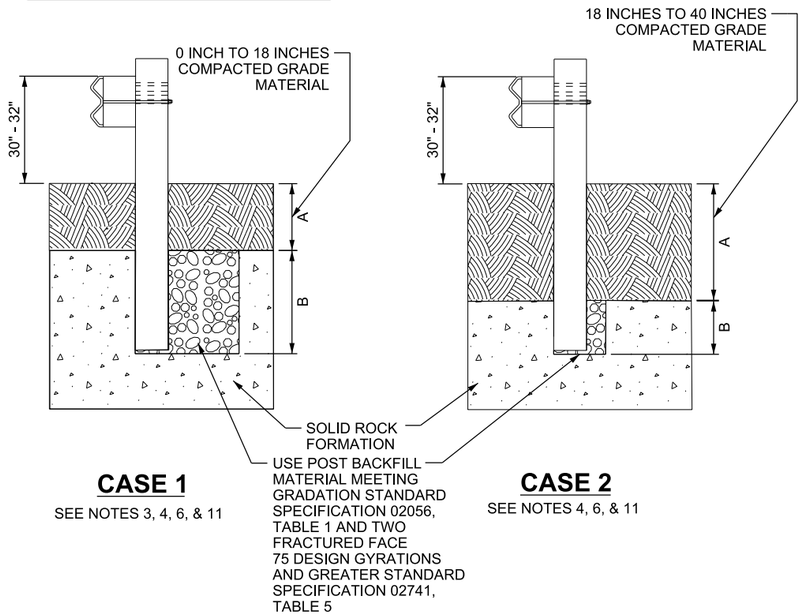


**CASE 1**

SEE NOTES 3, 4, 6, & 11

**CASE 2**

SEE NOTES 4, 6, & 11

## DETAIL A: GUARDRAIL POST IN ROCK FORMATION

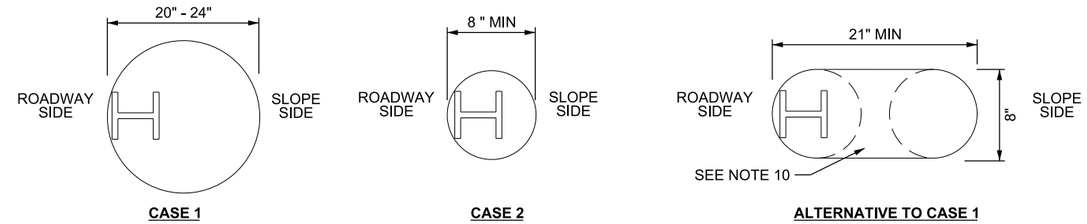


**CASE 1** **CASE 2** **ALTERNATIVE TO CASE 1**

## PLAN VIEW STEEL POST

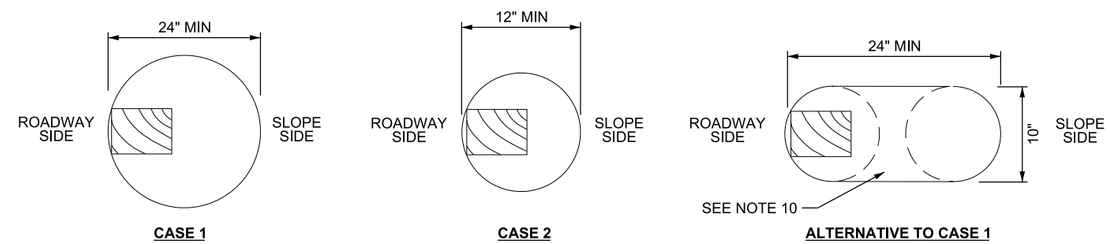


**CASE 1** **CASE 2** **ALTERNATIVE TO CASE 1**

## PLAN VIEW WOOD POSTS

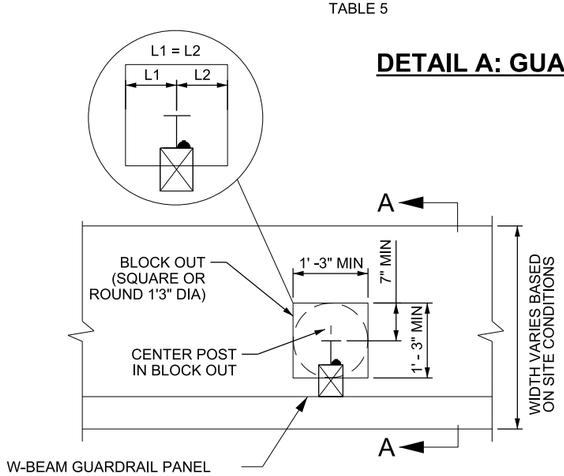


**POSTS DETAIL**

STEEL POST SHOWN
WOOD POST SIMILAR

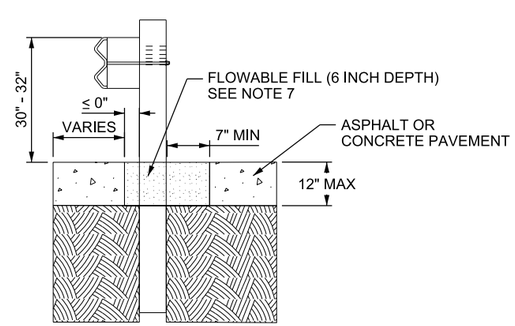


**SECTION A-A**

SEE NOTES 4, 5, 7, 8 & 9

## DETAIL B: GUARDRAIL POST IN HMA / CONCRETE PAVEMENT

**NOTES:**

1. USE DETAIL "A" WHEN SOLID ROCK CONDITIONS PROHIBIT THE STANDARD GUARDRAIL POST INSTALLATION.
2. USE DETAIL "B" WHEN GUARDRAIL POST, TYPE "G" OR "H" END TREATMENT POST INSTALLATION IS REQUIRED THROUGH HMA OR CONCRETE PAVEMENT.
3. CUT BOTTOM OFF POST AT THE REQUIRED LENGTH SUFFICIENT TO MEET TOP OF RAIL HEIGHT REQUIREMENT WHEN INSTALLING POSTS WITHIN SOLID ROCK FORMATIONS. COAT ALL FIELD-CUT STEEL POSTS WITH A FIELD-APPLIED COLD ZINC MATERIAL.
4. PLACE POST TO ROADWAY SIDE OF HOLE.
5. THESE METHODS ARE APPLICABLE TO TYPICAL W-BEAM GUARDRAIL. ALSO APPLICABLE TO TYPE "F", "G", AND "H" END TREATMENTS WITH FOUNDATION TUBES, STEEL BREAKAWAY POSTS AND CRT POSTS.
6. CONSULT TYPE "F," "G," AND "H" END TREATMENT MANUFACTURER FOR INSTALLATION REQUIREMENTS IN SOLID ROCK FORMATIONS.
7. USE FLOWABLE FILL MEETING STANDARD SPECIFICATION 03575 WITH 28 DAY COMPRESSIVE STRENGTH OF 50 PSI TO 120 PSI. COMPACT EXISTING MATERIAL AROUND GUARDRAIL POST PRIOR TO INSTALLATION OF FLOWABLE FILL.
8. SEE INSTALLATION DETAIL STD DWG BA 4D1 OR BA 4D2 FOR POST LENGTH REQUIREMENTS.
9. CREATE BLOCK OUT BY FORMING, SAW CUTTING OR OTHER SIMILAR METHOD.
10. EXCAVATE AREA BETWEEN DRILLED HOLES. MEET CASE 1 OR CASE 2 BACKFILL REQUIREMENTS.
11. COMPACT BACKFILL ACCORDING TO STANDARD SPECIFICATION 02841.

SUPPLEMENTAL DRAWING

REVISIONS

| NO. | DATE | APPR. | REMARKS |
|---|---|---|---|
| 1 | 2/22/2018 | SDD | CORRECTED BARRIER HEIGHT REQUIREMENT. |

**UTAH DEPARTMENT OF TRANSPORTATION**
STANDARD DRAWINGS FOR ROAD AND BRIDGE CONSTRUCTION
SALT LAKE CITY, UTAH

RECOMMENDED FOR APPROVAL — FEB 22, 2018 DATE
CHAIRMAN STANDARDS COMMITTEE APPROVED — FEB 22, 2018 DATE
DEPUTY DIRECTOR

W-BEAM GUARDRAIL TYPICAL LINE POST EMBEDMENT SPECIAL CONDITIONS

STANDARD DRAWING TITLE

STD. DWG. NO.
BA 4D3

DGN File:L:\Standard_Drawings\Imperial\2017 Approved_Supplemental_Issues\Supp4Approved FEB_2018\Backup2\BA04D3.dgn
06-MAR-2018

| DIMENSION REFERENCE TABLE (PROWAG R302 - R305) | | | | |
|---|---|---|---|---|
| | ITEM | MAX. RUNNING SLOPE | MAX. CROSS SLOPE | MIN. DIMENSIONS |
| S | SIDEWALK | RD GRADE (IN ROW) 5.0% (OUT OF ROW) | 2.0% | 4 FT WIDE (i) |
| T | TURNING SPACE | 2.0% | 2.0% (iv), (v) | 4 FT X 4 FT (ii), (viii) |
| R | RAMP | 8.3% (iii) | 2.0% (iv), (v) | 4 FT WIDE (viii) |
| B | BLENDED TRANSITION | 5.0% | 2.0% (iv), (v) | 4 FT WIDE (viii) |
| C | CLEAR SPACE | 5.0% (vi) | 2.0% (iv), (v) | 4 FT X 4 FT |
| | CROSSWALK | 5.0% | 2.0% (iv), (v) | 10 FT WIDE |
| F1 | FLARE WITHIN SIDEWALK | 10.0% (vii) | - | - |
| F2 | FLARE NOT IN SIDEWALK | 25.0% (vii) | - | - |

(i) SIDEWALK WIDTH IS EXCLUSIVE OF THE WIDTH OF THE CURB. PROVIDE 5 FT X 5 FT PASSING SPACES AT 200 FT MAX. INTERVALS WHERE SIDEWALK WIDTH IS LESS THAN 5 FT (PROWAG R302.3 - R302.4). DRIVEWAYS MAY BE USED AS A PASSING SPACE WHERE A MINIMUM 5 FT WIDE AREA MEETING SIDEWALK REQUIREMENTS IS PROVIDED.

(ii) USE A 5 FT MIN. DEPTH IN THE DIRECTION OF THE RAMP RUN FOR PERPENDICULAR RAMPS WHERE TURNING SPACE IS CONSTRAINED AT THE BACK OF SIDEWALK. (PROWAG R304.2.1)
USE A 5 FT MIN. WIDTH IN THE DIRECTION OF THE STREET CROSSING FOR PARALLEL RAMPS WHERE TURNING SPACE IS CONSTRAINED ON 2 OR MORE SIDES (PROWAG R304.3.1)
TURNING SPACE IS CONSTRAINED BY ANY VERTICAL DIFFERENCE GREATER THAN 3.0 IN.

(iii) LENGTH OF 8.3% MAX RUNNING SLOPE IS NOT REQUIRED TO EXCEED 15 FT. STEEPEN GRADE TO MATCH EXISTING WITHIN AT LEAST 15 FT OR THE NEXT NEAREST JOINT IF THE MAX RUNNING SLOPE CAN NOT BE MET IN 15 FT. (PROWAG R304.2.2, R304.3.2).

(iv) DO NOT EXCEED 5.0% CROSS SLOPE FOR CROSSINGS WITHOUT YIELD OR STOP CONTROL WHERE THERE IS NO STOP OR YIELD SIGN OR WHERE THERE IS A TRAFFIC SIGNAL DESIGNED FOR A GREEN PHASE.
DO NOT EXCEED 2.0% CROSS SLOPE FOR CROSSINGS WITH YIELD OR STOP CONTROL. (PROWAG R302.6)

(v) MATCH THE HIGHWAY GRADE AT MIDBLOCK CROSSINGS (PROWAG R302.6.2)

(vi) FLATTEN GUTTER SLOPE TO 5.0 PERCENT MAX AND MAINTAIN CLEAR SPACE RUNNING SLOPE ACROSS ENTIRE CURB CUT. (PROWAG R304.5.4) (SEE STD DWG PA 3, DETAIL A)

(vii) MEASURE FLARE SLOPE PARALLEL TO CURB LINE. FLARES NOT IN THE SIDEWALK ARE PERMITTED TO BE A VERTICAL CURB FACE WHEN ACCESS FROM PLOWS IS NOT EXPECTED.

(viii) MATCH TURNING SPACE, RAMP, AND BLENDED TRANSITION WIDTH TO CURB CUT AT PROJECTED BACK OF CURB.

**DEFINITIONS**

**SINGLE DIAGONAL (APEX) RAMP:** A CURB RAMP THAT SERVES BOTH PEDESTRIAN STREET CROSSINGS (PROWAG R207.2)

**BLENDED TRANSITION:** A RAISED PEDESTRIAN STREET CROSSING, DEPRESSED CORNER, OR SIMILAR CONNECTION BETWEEN THE PEDESTRIAN ACCESS ROUTE AT THE LEVEL OF THE SIDEWALK AND THE LEVEL OF THE PEDESTRIAN STREET CROSSING THAT HAS A GRADE OF 5 PERCENT OR LESS (PROWAG R105.5)

**CLEAR SPACE:** A SPACE BEYOND THE BOTTOM GRADE BREAK OF THE RAMP, PROVIDED WITHIN THE WIDTH OF THE PEDESTRIAN STREET CROSSING AND WHOLLY OUTSIDE THE PARALLEL VEHICLE TRAVEL LANE (PROWAG R304.5.5)

**COMBINATION RAMP:** RAMPS THAT PROVIDE A COMBINATION OF CONFORMING PARALLEL AND PERPENDICULAR RAMPS

**CROSS SLOPE:** THE GRADE THAT IS PERPENDICULAR TO THE DIRECTION OF PEDESTRIAN TRAVEL (PROWAG R105.5)

**CURB CUT:** THE AREA WHERE THE CURB IS CUT FLUSH TO THE FLOWLINE OF THE GUTTER OR ADJACENT ROADWAY EXCLUDING SLOPED CURB AT THE SIDES.

**EXISTING PHYSICAL CONSTRAINTS:** INCLUDE, BUT ARE NOT LIMITED TO, UNDERLYING TERRAIN, RIGHT-OF-WAY AVAILABILITY, UNDERGROUND STRUCTURES, ADJACENT DEVELOPED FACILITIES, DRAINAGE, OR THE PRESENCE OF A NOTABLE NATURAL OR HISTORIC FEATURE. (PROWAG R202.3.1)

**GRADE BREAK:** THE LINE WHERE TWO SURFACE PLANES WITH DIFFERENT GRADES MEET.

**FLARE:** A SLOPED SURFACE THAT PROVIDES A GRADED TRANSITION ON THE SIDE OF A CURB RAMP OR BLENDED TRANSITION BETWEEN THE CURB AND THE TURNING SPACE, MEASURED PARALLEL TO THE CURB.

**PARALLEL RAMP:** CURB RAMPS THAT HAVE A RUNNING SLOPE THAT IS IN-LINE WITH THE DIRECTION OF SIDEWALK TRAVEL AND LOWER THE SIDEWALK TO A LEVEL TURNING SPACE WHERE A TURN IS MADE TO ENTER THE PEDESTRIAN STREET CROSSING. (PROWAG ADVISORY R304.1)

**PEDESTRIAN ACCESS ROUTE:** A CONTINUOUS AND UNOBSTRUCTED PATH OF TRAVEL PROVIDED FOR PEDESTRIANS WITH DISABILITIES WITHIN OR COINCIDING WITH A PEDESTRIAN CIRCULATION PATH (PROWAG R105.5)

**PEDESTRIAN CIRCULATION PATH:** A PREPARED EXTERIOR OR INTERIOR SURFACE PROVIDED FOR PEDESTRIAN TRAVEL IN THE PUBLIC RIGHT-OF-WAY. (PROWAG R105.5)

**PERPENDICULAR RAMP:** CURB RAMPS THAT HAVE A RUNNING SLOPE THAT CUTS THROUGH OR IS BUILT UP TO THE CURB AT RIGHT ANGLES OR MEETS THE GUTTER BREAK AT RIGHT ANGLES WHERE THE CURB IS CURVED. (PROWAG ADVISORY R304.1)

**PROWAG:** "PROPOSED ACCESSIBILITY GUIDELINES FOR PEDESTRIAN FACILITIES IN THE PUBLIC RIGHT-OF-WAY". THE DOCUMENT USED AS THE PRIMARY RESOURCE FOR INFORMATION SHOWN (SEE NOTE 1).

**RUNNING SLOPE:** THE GRADE THAT IS PARALLEL TO THE DIRECTION OF PEDESTRIAN TRAVEL (PROWAG R105.5)

**TURNING SPACE:** SPACE AT THE TOP AND BOTTOM OF A RAMP TO ALLOW FOR DIRECTIONAL CHANGE, PERMITTED TO OVERLAP OTHER TURNING SPACES AND CLEAR SPACES (PROWAG R304.2.1, R304.3.1)

**DESIGN NOTES APPLICABLE TO PA SERIES:**

A. CONVENTIONAL INDUSTRY TOLERANCES DO NOT APPLY TO DESIGN WORK. (PROWAG ADVISORY R103.1)

B. PROVIDE A NO PEDESTRIAN (R9-3) SIGN AND A USE CROSSWALK (R9-3BP) PLAQUE (L OR R) IF PEDESTRIAN CROSSING IS PROHIBITED AT UNMARKED CROSSWALKS. (PROWAG ADVISORY R206) (SEE STD DWG PA 3 DETAIL B)

C. A SINGLE DIAGONAL CORNER (APEX) RAMP IS PERMITTED TO SERVE BOTH PEDESTRIAN CROSSINGS IN SITUATIONS WHERE EXISTING PHYSICAL CONSTRAINTS PREVENT THE USE OF A CURB RAMP, BLENDED TRANSITION, OR A COMBINATION OF CURB RAMPS AND BLENDED TRANSITIONS. (PROWAG R207.2) USE OF A SINGLE DIAGONAL RAMP IS DISCOURAGED AND IS ONLY TO BE USED AT THE APPROVAL OF THE REGION TRAFFIC ENGINEER.

D. ONLY A (4.0 FT) PORTION OF THE SIDEWALK IS REQUIRED TO COMPLY WITH THE REQUIREMENTS LISTED HEREIN WHERE SIDEWALKS ARE WIDER THAN 4.0 FT. (PROWAG ADVISORY R302.3)

E. PROVIDE A FIRM, STABLE, AND SLIP RESISTANT SURFACE FOR ALL PEDESTRIAN ACCESS ROUTES (PROWAG R302.7)

**GENERAL NOTES APPLICABLE TO PA SERIES:**

1. INFORMATION PROVIDED IS BY REFERENCE FROM THE UNITED STATES ACCESS BOARD DOCUMENT "PROPOSED ACCESSIBILITY GUIDELINES FOR PEDESTRIAN FACILITIES IN THE PUBLIC RIGHT-OF-WAY" (PROWAG).

2. THE USE OF ALTERNATIVE DESIGNS, PRODUCTS, OR TECHNOLOGIES THAT MEET OR EXCEED THE REQUIREMENTS SHOWN IS PERMITTED. (PROWAG R102)

3. PROVIDE AN ALTERNATE PEDESTRIAN ACCESS ROUTE COMPLYING WITH SECTIONS 6D.01, 6D.02, AND 6G.05 OF THE MUTCD WHEN A PEDESTRIAN CIRCULATION PATH IS TEMPORARILY CLOSED. COMPLY WITH SECTIONS 6F.63, 6F.68, AND 6F.71 OF THE MUTCD WHERE PEDESTRIAN BARRICADES AND CHANNELIZING DEVICES ARE PROVIDED. (PROWAG R205)

4. CONNECT THE PEDESTRIAN ACCESS ROUTES AT EACH PEDESTRIAN STREET CROSSING WITH A CURB RAMP, BLENDED TRANSITION, OR A COMBINATION OF CURB RAMPS AND BLENDED TRANSITIONS. (PROWAG R207.1)

5. LOCATE THE CURB RAMP (EXCLUDING FLARED SIDES) OR BLENDED TRANSITION COMPLETELY WITHIN THE CROSSWALK (PROWAG R207.1)

6. CONSTRUCT ALL GRADE BREAKS TO BE FLUSH (PROWAG R302.7.1) PREVENT OR CORRECT ANY VERTICAL DIFFERENCES IN SURFACES GREATER THAN 0.5 IN. BEVEL VERTICAL DIFFERENCES BETWEEN 0.25 IN AND 0.5 IN WITH A SLOPE NOT STEEPER THAN 2H:1V ACROSS THE ENTIRE VERTICAL DIFFERENCE. (PROWAG R302.7.2) (SEE DETAIL BELOW)

7. CONSTRUCT GRADE BREAKS AT THE TOP AND BOTTOM OF CURB RAMP RUNS PERPENDICULAR TO THE DIRECTION OF THE RAMP RUN. DO NOT PLACE GRADE BREAKS ON THE SURFACES OF RAMP RUNS AND TURNING SPACES. (PROWAG R304.5.2)

8. SITE CONDITIONS MAY VARY. CONFIGURATION OF RAMP, BLENDED TRANSITION, TURNING SPACE, AND CLEAR SPACE MAY BE ALTERED, BUT THEY MUST MEET DIMENSIONS AND SLOPES SHOWN HERE. THE USE OF ITEMS SUCH AS FLARES AND CURBWALLS ARE AT THE DISCRETION OF THE ENGINEER.

9. DO NOT USE DIRECTIONAL ACCESSES WHEN PEDESTRIANS CAN APPROACH THE DETECTABLE WARNING SURFACE FROM MORE THAN ONE DIRECTION.

10. CONSTRUCT ALL PEDESTRIAN ACCESS ROUTE ELEMENTS SO MAXIMUM OR MINIMUM VALUES ARE NOT EXCEEDED.

11. PROVIDE TOOLED JOINTS ON ALL GRADE BREAKS.

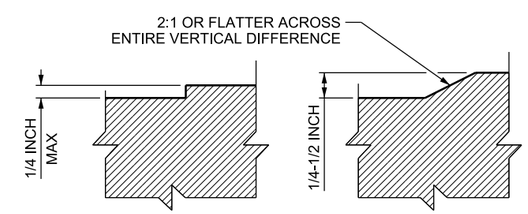


**VERTICAL SURFACE DISCONTINUITIES**

SEE NOTE 6

SUPPLEMENTAL DRAWING

REVISIONS

| NO. | DATE | APPR. | REMARKS |
|---|---|---|---|
| 1 | 2/22/18 | CGW | NEW DRAWING |

UTAH DEPARTMENT OF TRANSPORTATION
STANDARD DRAWINGS FOR ROAD AND BRIDGE CONSTRUCTION
SALT LAKE CITY, UTAH

RECOMMENDED FOR APPROVAL — FEB. 22, 2018 DATE
CHAIRMAN STANDARDS COMMITTEE APPROVED — FEB. 22, 2018 DATE
DEPUTY DIRECTOR

GENERAL PEDESTRIAN ACCESS
STANDARD DRAWING TITLE

STD. DWG. NO.
PA 1

06-MAR-2018 DGN File:L:\Standard.Drawings\Imperial\2017 Approved_Supplemental.Issues\Supp4Approved FEB.2018\Backup2\PA 01.dgn

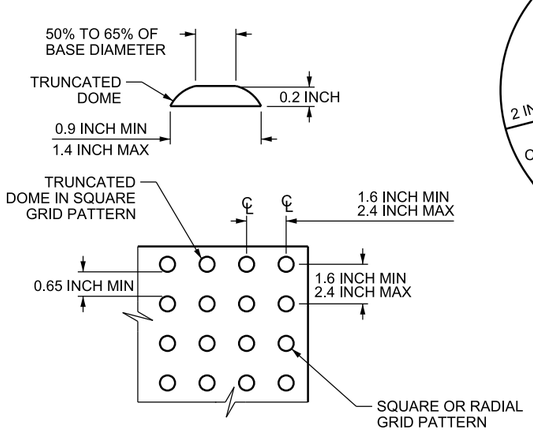


## DETECTABLE WARNING SURFACE DETAIL A

(PROWAG R305)

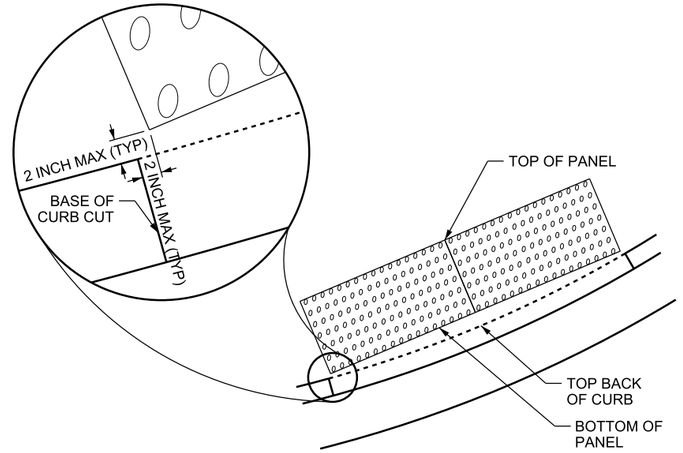


## DETECTABLE WARNING SURFACE PANEL WITHOUT GAP (PREFERRED) DETAIL B

SEE NOTES 4 AND 5

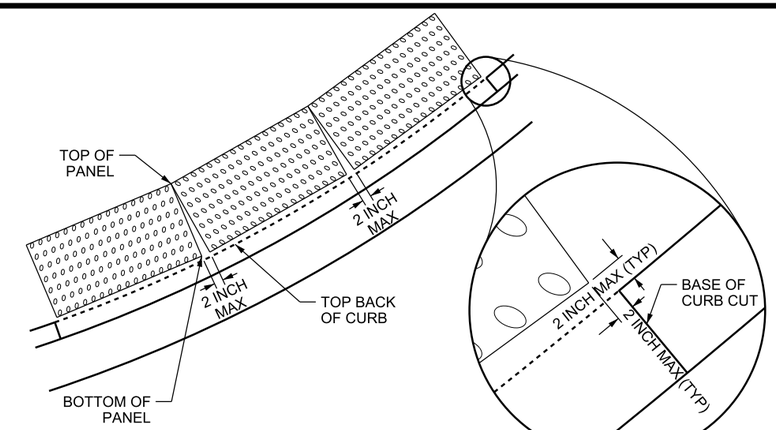


## DETECTABLE WARNING SURFACE PANEL WITH GAP - DETAIL C

SEE NOTES 4 AND 5

**NOTES:**

1. REFER TO STD DWG PA 1 FOR DIMENSION TABLE AND GENERAL NOTES.
2. DETECTABLE WARNING SURFACES ARE NOT REQUIRED AT PEDESTRIAN REFUGE ISLANDS THAT ARE CUT-THROUGH AT STREET LEVEL AND ARE LESS THAN 6.0 FT IN LENGTH. THE SIGNAL SHOULD BE TIMED FOR A COMPLETE CROSSING OF THE STREET WHERE SIGNALIZED AND THE CUT-THROUGH ISLAND DOES NOT HAVE DETECTABLE WARNING SURFACES. (PROWAG R208.2)
3. PROVIDE DETECTABLE WARNING SURFACE THAT CONTRASTS WITH ADJACENT ACCESS ROUTE, GUTTER, STREET, AND FLARES, EITHER DARK-ON-LIGHT OR LIGHT-ON-DARK. (PROWAG R305.1.3)
4. PLACE DETECTABLE WARNING SURFACE ACCORDING TO MANUFACTURER'S RECOMMENDATIONS 2 FT MINIMUM IN THE DIRECTION OF PEDESTRIAN TRAVEL FOR THE FULL WIDTH OF THE RAMP (EXCLUDING FLARES), BLENDED TRANSITION, OR TURNING SPACE (PROWAG R305.1.4). USE OF PRODUCTS DESIGNED TO MATCH THE EXACT CURB RADII ARE ACCEPTABLE. USE A 4 FT MINIMUM CURB CUT WIDTH FOR SINGLE-DIRECTION CROSSWALKS AND AN 8 FT MINIMUM FOR BI-DIRECTIONAL. CURB CUT WIDTHS LESS THAN 8 FT (4 FT MIN) MAY BE USED FOR BI-DIRECTIONAL CROSSWALKS UPON APPROVAL OF THE REGION TRAFFIC ENGINEER. DETECTABLE WARNING SURFACE WIDTHS IN 4 FT INCREMENTS ARE PREFERRED.
5. PLACE DETECTABLE WARNING SURFACE ON PERPENDICULAR CURB RAMPS AS FOLLOWS (PROWAG R 305.2.1):
   A. PLACE DETECTABLE WARNING SURFACES AT THE BACK OF CURB WHERE THE ENDS OF THE BOTTOM GRADE BREAK ARE IN FRONT OF THE BACK OF CURB.
   B. PLACE DETECTABLE WARNING SURFACES ON THE RAMP RUN WITHIN 2 INCHES OF THE BOTTOM GRADE BREAK WHERE THE ENDS OF THE BOTTOM GRADE BREAK ARE BEHIND THE BACK OF CURB AND THE DISTANCE FROM EITHER END OF THE BOTTOM GRADE BREAK TO THE BACK OF CURB IS 5.0 FT OR LESS. (SEE DETAIL D2)
   C. PLACE DETECTABLE WARNING SURFACES ON THE LOWER LANDING AT THE BACK OF CURB WHERE THE ENDS OF THE BOTTOM GRADE BREAK ARE BEHIND THE BACK OF CURB AND THE DISTANCE FROM EITHER END OF THE BOTTOM GRADE BRAKE TO THE BACK OF CURB IS MORE THAN 5.0 FT. (DETAIL D1)
6. PLACE DETECTABLE WARNING SURFACES ON THE TURNING SPACE AT THE FLUSH TRANSITION BETWEEN THE STREET AND SIDEWALK (AT THE BACK OF CURB) ON PARALLEL CURB RAMPS. (PROWAG R305.2.2)
7. PLACE DETECTABLE WARNING SURFACES AT THE BACK OF CURB ON BLENDED TRANSITIONS. (PROWAG R305.2.3)
8. PLACE DETECTABLE WARNING SURFACES ON EACH SIDE OF THE RAIL CROSSING AT PEDESTRIAN AT-GRADE RAIL CROSSINGS NOT LOCATED WITHIN A STREET OR HIGHWAY. PLACE THE EDGE OF THE DETECTABLE WARNING SURFACE NEAREST THE RAIL CROSSING BETWEEN 6.0 FT MINIMUM AND 15.0 FT MAXIMUM FROM THE CENTERLINE OF THE NEAREST RAIL. PLACE DETECTABLE WARNING SURFACES ON THE SIDE OF THE GATES OPPOSITE THE RAIL WHERE PEDESTRIAN GATES ARE PROVIDED. (PROWAG R305.2.5)
9. PLACE DETECTABLE WARNING SURFACES AT THE FLUSH TRANSITION BETWEEN THE STREET AND SIDEWALK WHEN THERE IS A RAISED STREET CROSSING, DEPRESSED CORNERS, OR THERE IS NO GRADE CHANGE BETWEEN THE SIDEWALK AND THE STREET (SEE DETAIL E1). (PROWAG R305.2.3)
10. THE TURNING SPACE IS PERMITTED TO OVERLAP OTHER TURNING SPACES AND CLEAR SPACES. (PROWAG R304.2.1, R304.3.1) THE TURNING SPACE MAY BE PLACED AT THE BOTTOM OF THE RAMP OR IN THE CLEAR SPACE IF THE COMBINED SPACE SLOPE MEETS ALL THE REQUIREMENTS OF THE TURNING SPACE.
11. THE TURNING SPACE AT THE TOP OF THE RAMP MAY BE OMITTED IN DIRECTIONAL RAMP APPLICATIONS WITH ONLY ONE SIDEWALK APPROACH THAT DOES NOT REQUIRE A CHANGE IN DIRECTION. PROVIDE A BLENDED TRANSITION WITH A 2% MAX RUNNING SLOPE WHERE THE TURNING SPACE IS OMITTED.
12. GRIND OFF REMAINING PORTION OF ANY CUT DOMES WHEN DETECTABLE WARNING SURFACE IS CUT. SEAL ALL CUT PANEL EDGES TO PREVENT WATER DAMAGE.

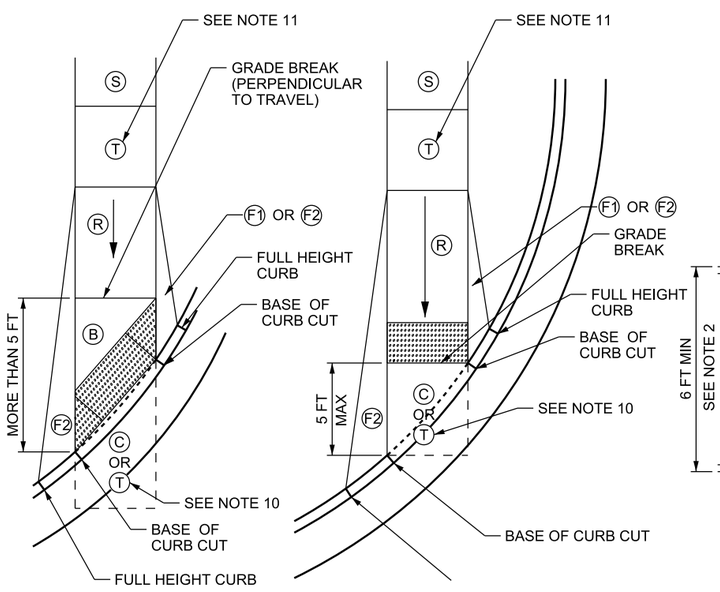


## DETAIL D1

## DETAIL D2

## DETECTABLE WARNING SURFACE PLACEMENT FOR DIRECTIONAL CURB RAMPS DETAIL D

SEE NOTE 5

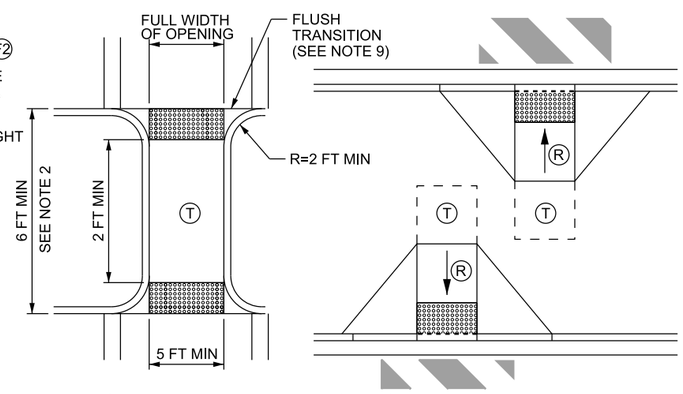


## CUT THRU DETAIL E1

## OFFSET PERPENDICULAR RAMP - DETAIL E2

## PEDESTRIAN REFUGE ISLAND

SUPPLEMENTAL DRAWING

| NO. | DATE | APPR. | REMARKS |
|---|---|---|---|
| 1 | 2/22/18 | CGW | NEW DRAWING |

REVISIONS

**UTAH DEPARTMENT OF TRANSPORTATION**
STANDARD DRAWINGS FOR ROAD AND BRIDGE CONSTRUCTION
SALT LAKE CITY, UTAH

RECOMMENDED FOR APPROVAL — FEB. 22, 2018 DATE
CHAIRMAN STANDARDS COMMITTEE APPROVED — FEB. 22, 2018 DATE
DEPUTY DIRECTOR

STANDARD DRAWING TITLE: DETECTABLE WARNING SURFACE PEDESTRIAN ACCESS

STD. DWG. NO. PA 2

DGN File: L:\Standard_Drawings\Imperial\2017 Approved_Supplemental_Issues\Supp4Approved FEB_2018\Backup2\PA 02.dgn
06-MAR-2018

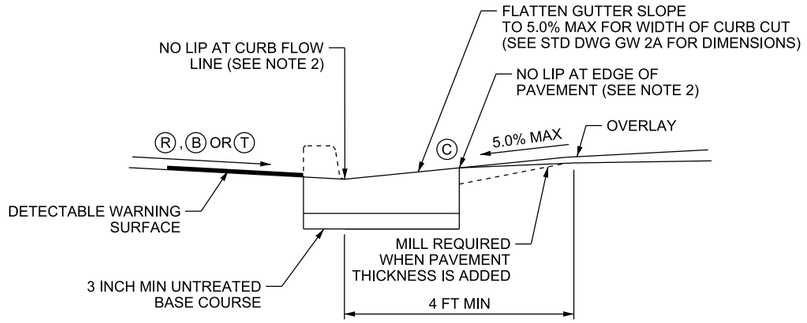


## CLEAR SPACE
## DETAIL A

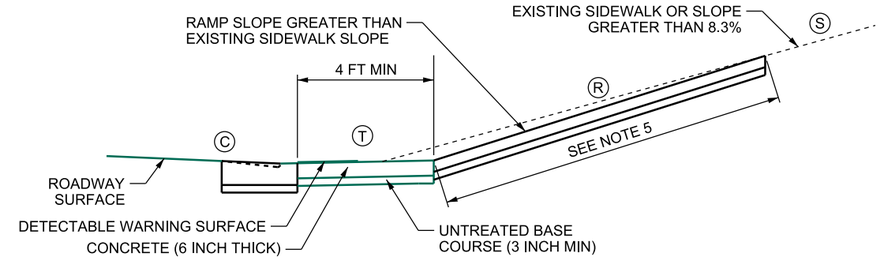


**RAMP SLOPE STEEPENED TO MATCH EXISTING GRADE**

## 15-FT MAXIMUM RAMP SLOPE DETAIL
## DETAIL D

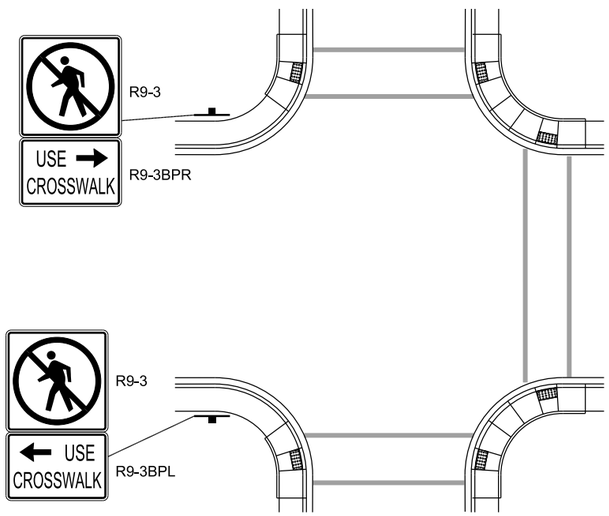


## SIGNING FOR PROHIBITED PEDESTRIAN CROSSING
## DETAIL B

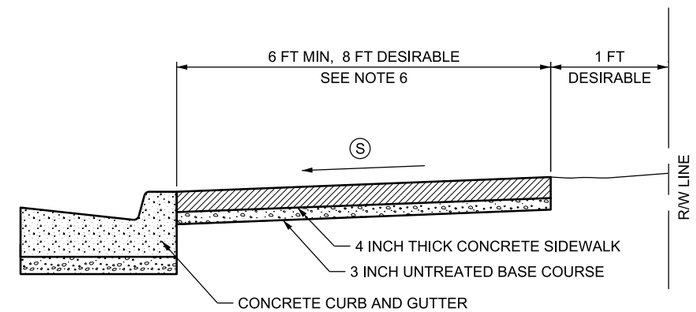


## NO PARKSTRIP
## DETAIL E

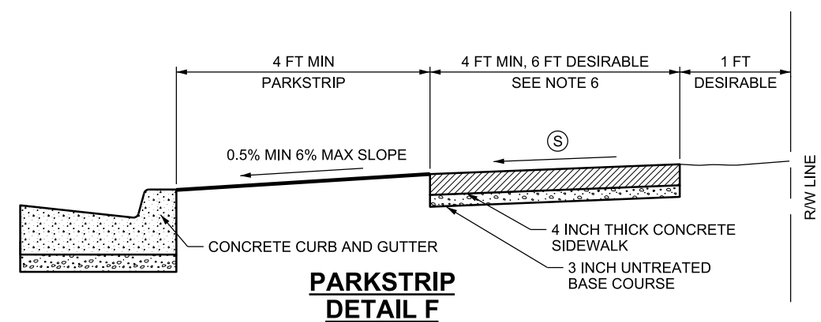


## PARKSTRIP
## DETAIL F

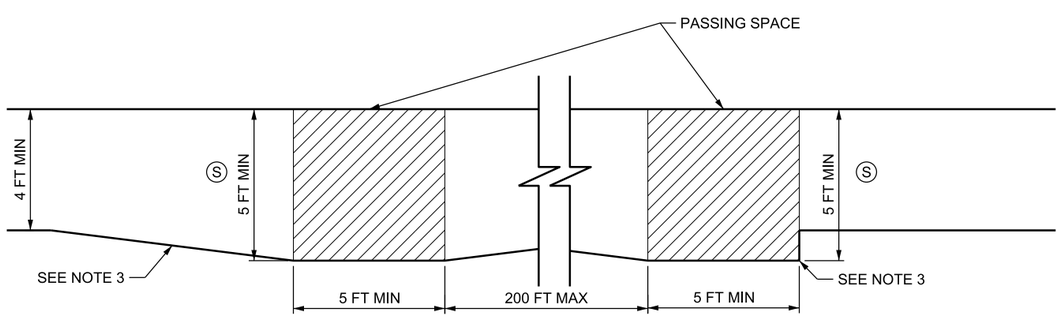


## PASSING SPACE
## DETAIL C

SEE NOTE 4

**NOTES:**

1. REFER TO STD DWG PA 1 FOR DIMENSION TABLE AND GENERAL NOTES.
2. SEE STD DWG PA 1, NOTE 6 FOR VERTICAL DIFFERENCE ALLOWANCES OR TREATMENTS.
3. FLARE AT A RATE EQUAL TO THE PANEL WIDTH TO ALLOW TRANSITIONS ACROSS WHOLE PANELS WHEN A TAPER RATE IS USED TO TRANSITION FROM AND TO A PASSING SPACE. USE A 5:1 FLARE RATE FOR A 5 FT WIDE SIDEWALK FOR EXAMPLE. TAPER RATE MAY BE MODIFIED OR OMITTED WHERE SITE CONDITIONS PROHIBIT USE.
4. SIDEWALK WIDTH IS EXCLUSIVE OF THE WIDTH OF THE CURB. PROVIDE 5 FT X 5 FT PASSING SPACES AT 200 FT MAX. INTERVALS WHERE SIDEWALK WIDTH IS LESS THAN 5 FT (PROWAG R302.3 - R302.4). DRIVEWAYS AND OTHER PAVED AREAS MAY BE USED AS A PASSING SPACE WHERE A MINIMUM 5 FT WIDE AREA MEETING SIDEWALK REQUIREMENTS IS PROVIDED.
5. STEEPEN GRADE TO MATCH EXISTING WITHIN AT LEAST 15 FT OR THE NEXT NEAREST JOINT IF THE MAX RUNNING SLOPE CAN NOT BE MET IN 15 FT. (PROWAG R304.2.2, R304.3.2). MOVE THE TURNING SPACE AWAY FROM THE RAMP SLOPE TO ALLOW FOR THE 8.3% MAXIMUM GRADE IN CONDITIONS WHERE THE SIDEWALK IS NEAR OR ATTACHED TO THE CURB AND GUTTER.
6. THE FOLLOWING MINIMUM WIDTHS ARE REQUIRED FROM BACK OF CURB TO BACK OF SIDEWALK AT DRIVEWAY LOCATIONS TO MEET GRADING REQUIREMENTS:
   - TYPE B1 CURB AND GUTTER: 7.67 FT
   - TYPE B2 CURB AND GUTTER: 9.75 FT
   - TYPE M2 CURB AND GUTTER: 5.08 FT

SUPPLEMENTAL DRAWING

REVISIONS

| NO. | DATE | APPR. | REMARKS |
|---|---|---|---|
| 1 | 2/22/18 | CGW | NEW DRAWING |

**UTAH DEPARTMENT OF TRANSPORTATION**
STANDARD DRAWINGS FOR ROAD AND BRIDGE CONSTRUCTION
SALT LAKE CITY, UTAH

RECOMMENDED FOR APPROVAL — FEB. 22, 2018 DATE
CHAIRMAN STANDARDS COMMITTEE APPROVED — FEB. 22, 2018 DATE
DEPUTY DIRECTOR

PEDESTRIAN ACCESS DETAILS
STANDARD DRAWING TITLE

STD. DWG. NO.
PA 3

06-MAR-2018 DGN File:L:\Standard.Drawings\Imperial\2017 Approved_Supplemental.Issues\Supp4Approved FEB.2018\Backup2\PA 03.dgn

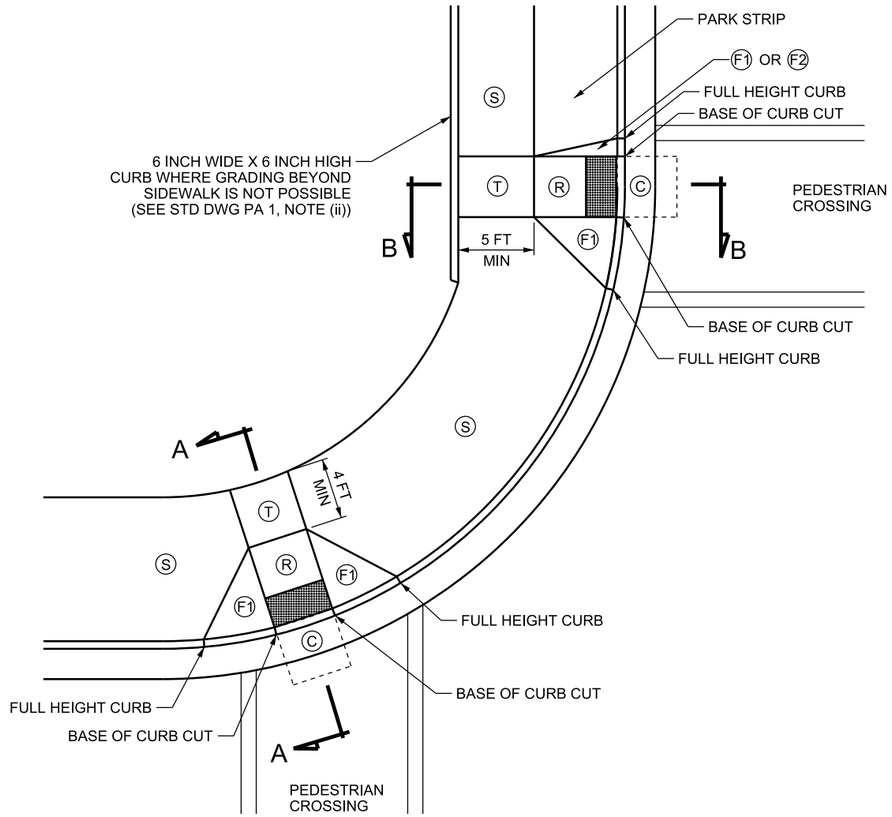


## DUAL PERPENDICULAR RAMP AT CORNER OPTION

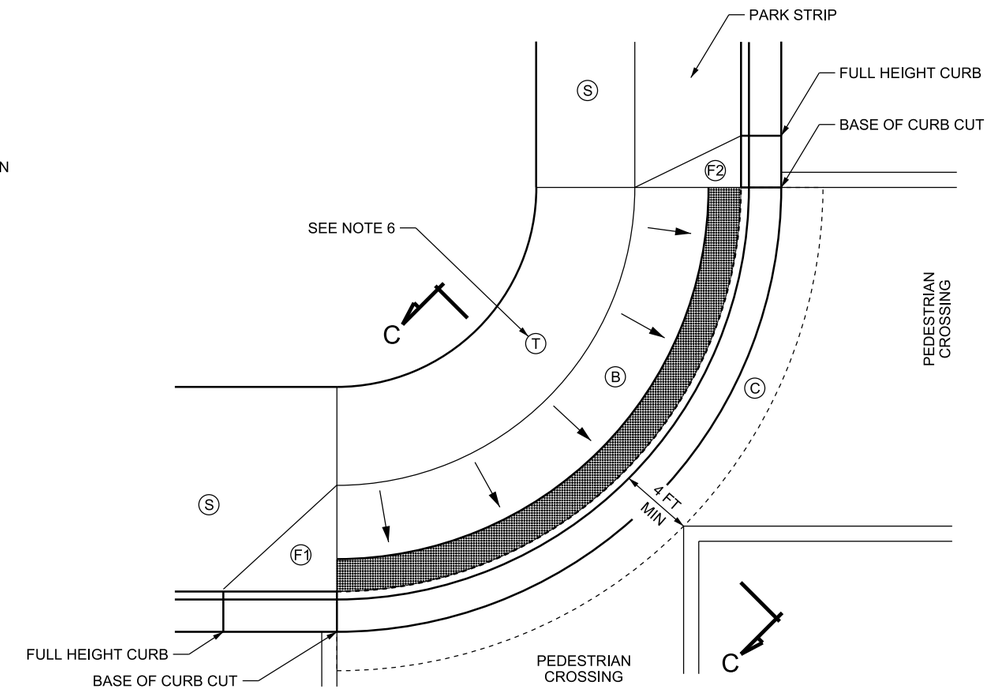


## BLENDED TRANSITION RAMP AT CORNER OPTION

SEE NOTE 6

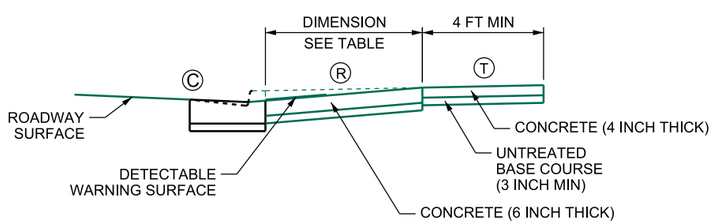


## SECTION A-A

| MIN CONSTRUCTABLE DIMENSIONS | | |
|---|---|---|
| CURB TYPE | SLOPE | MINIMUM DIMENSION (FT)* |
| B1-A | 5% | 11.6 |
| B1-A | 8.3% | 5.2 |
| B2-A | 5% | 15.75 |
| B2-A | 8.3% | 7.2 |
| M1-A | 5% | 5.75 |
| M1-A | 8.3% | 2.3 |

* MIN LENGTHS ASSUME 2% SIDEWALK/PARKSTRIP CROSS SLOPE

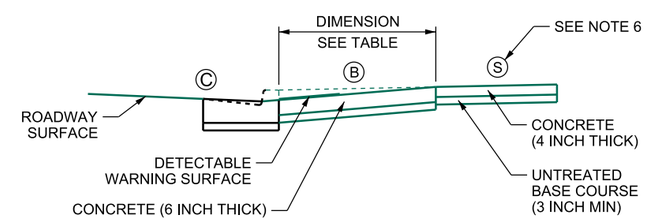


## SECTION C-C

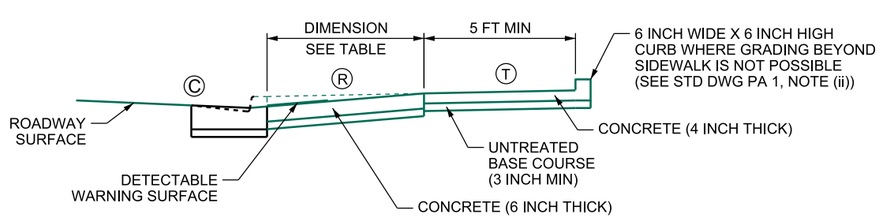


## SECTION B-B

**NOTES:**

1. REFER TO STD DWG PA 1 FOR DIMENSION TABLE AND GENERAL NOTES.
2. REFER TO STD DWG PA 2 FOR DETECTABLE WARNING SURFACE DETAILS.
3. REFER TO STD DWG PA 3, DETAIL A FOR CLEAR SPACE DETAIL.
4. RAMPS SHOWN ON THIS DRAWING ARE ACCEPTABLE FOR USE AT MID-BLOCK OR CORNER INSTALLATIONS.
5. PROVIDE TOOLED JOINTS ON ALL GRADE BREAKS.
6. ADDITIONAL AREA FOR TURNING SPACE IS NOT REQUIRED WHERE THE RUNNING SLOPE OF THE BLENDED TRANSITION IS 2% OR FLATTER. (PROWAG R302.6)

SUPPLEMENTAL DRAWING

REVISIONS

| NO. | DATE | APPR. | REMARKS |
|---|---|---|---|
| 1 | 2/22/18 | CGW | NEW DRAWING |

UTAH DEPARTMENT OF TRANSPORTATION
STANDARD DRAWINGS FOR ROAD AND BRIDGE CONSTRUCTION
SALT LAKE CITY, UTAH

RECOMMENDED FOR APPROVAL — FEB. 22, 2018 DATE
CHAIRMAN STANDARDS COMMITTEE APPROVED — FEB. 22, 2018 DATE
DEPUTY DIRECTOR

STANDARD DRAWING TITLE
PERPENDICULAR AND BLENDED TRANSITION PEDESTRIAN ACCESS

STD. DWG. NO.
PA 4

DGN File: L:\Standard_Drawings\Imperial\2017 Approved_Supplemental_Issues\Supp4Approved FEB_2018\Backup2\PA 04.dgn
06-MAR-2018

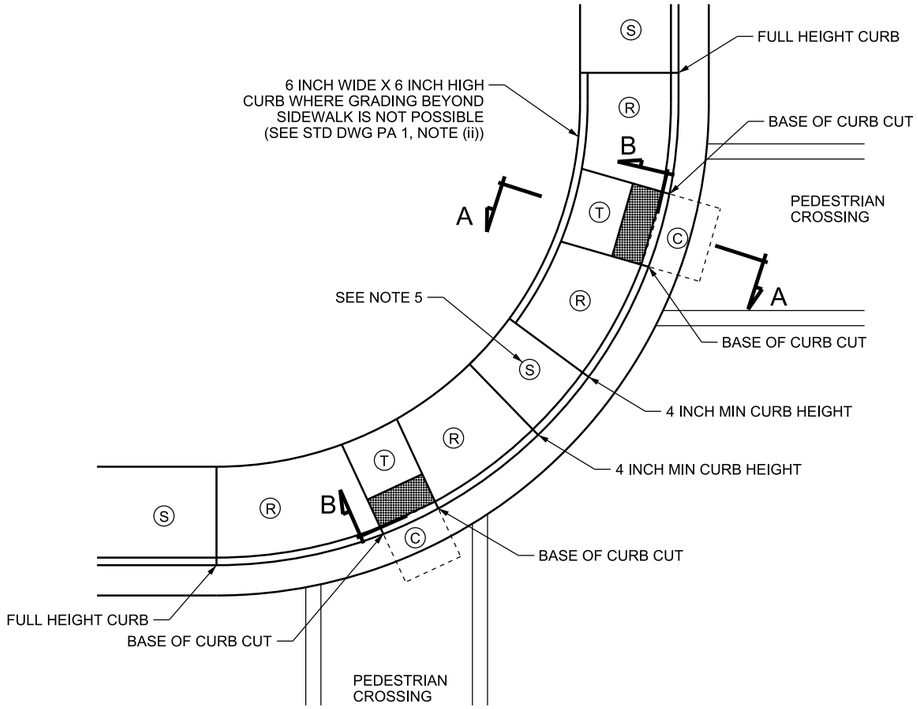


## DUAL PARALLEL RAMP AT CORNER OPTION

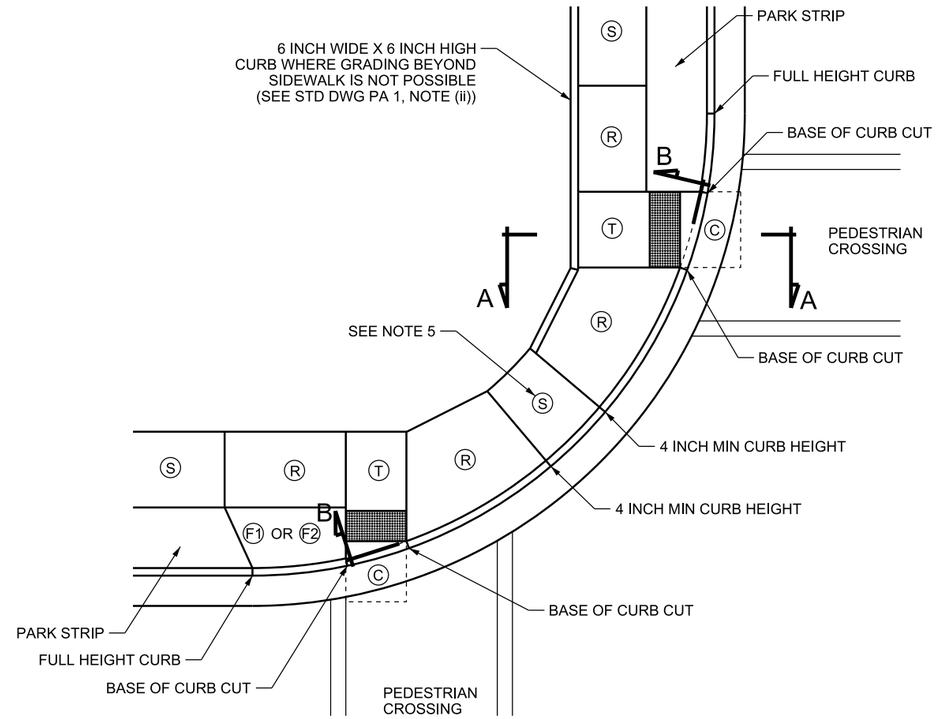


## DUAL PARALLEL RAMP AT CORNER OPTION

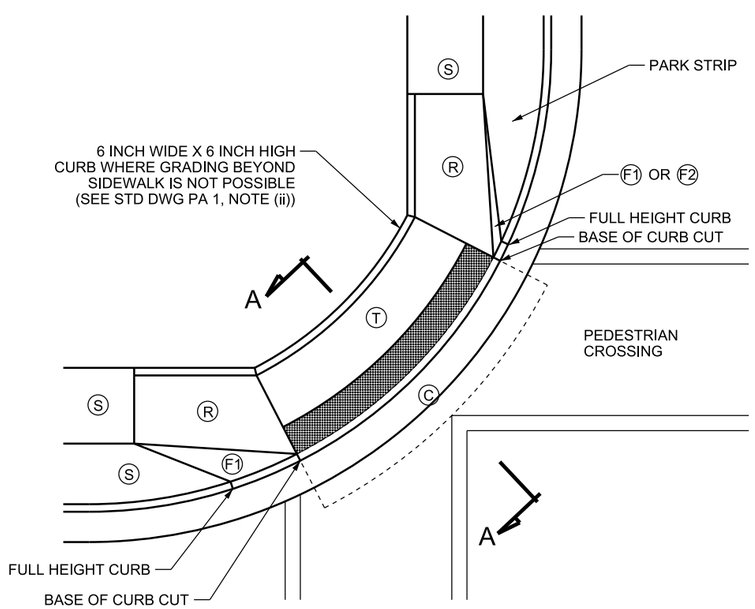


## SINGLE DIAGONAL CORNER (APEX) RAMP OPTION

SEE STD DWG PA 1, NOTE C

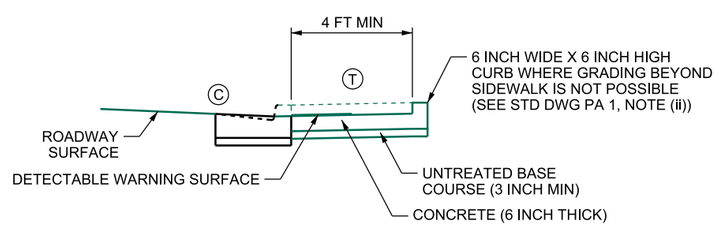


## SECTION A-A

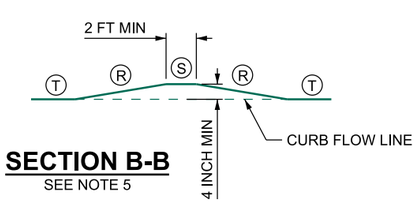


## SECTION B-B

SEE NOTE 5

**NOTES:**

1. REFER TO STD DWG PA 1 FOR DIMENSION TABLE AND GENERAL NOTES.
2. REFER TO STD DWG PA 2 FOR DETECTABLE WARNING SURFACE DETAILS.
3. REFER TO STD DWG PA 3, DETAIL A FOR CLEAR SPACE DETAIL.
4. RAMPS SHOWN ON THIS DRAWING ARE ACCEPTABLE FOR USE AT MID-BLOCK OR CORNER INSTALLATIONS.
5. PROVIDE A MINIMUM 2 FT WIDE SPACE BETWEEN ADJACENT RAMPS. THE CURB HEIGHT OF THIS SPACE IS A MINIMUM 4 INCHES TALL FROM CURB FLOW LINE TO TOP OF CURB.
6. PROVIDE TOOLED JOINTS ON ALL GRADE BREAKS.

SUPPLEMENTAL DRAWING

REVISIONS

| NO. | DATE | APPR. | REMARKS |
|---|---|---|---|
| 1 | 2/22/18 | CGW | NEW DRAWING |

**UTAH DEPARTMENT OF TRANSPORTATION**
STANDARD DRAWINGS FOR ROAD AND BRIDGE CONSTRUCTION
SALT LAKE CITY, UTAH

RECOMMENDED FOR APPROVAL — FEB. 22, 2018 DATE
CHAIRMAN STANDARDS COMMITTEE APPROVED — FEB. 22, 2018 DATE
DEPUTY DIRECTOR — DATE

PARALLEL PEDESTRIAN ACCESS

STANDARD DRAWING TITLE

STD. DWG. NO.
PA 5

06-MAR-2018 DGN File:L:\Standard_Drawings\Imperial\2017 Approved_Supplemental_Issues\Supp4Approved FEB_2018\Backup2\PA 05.dgn

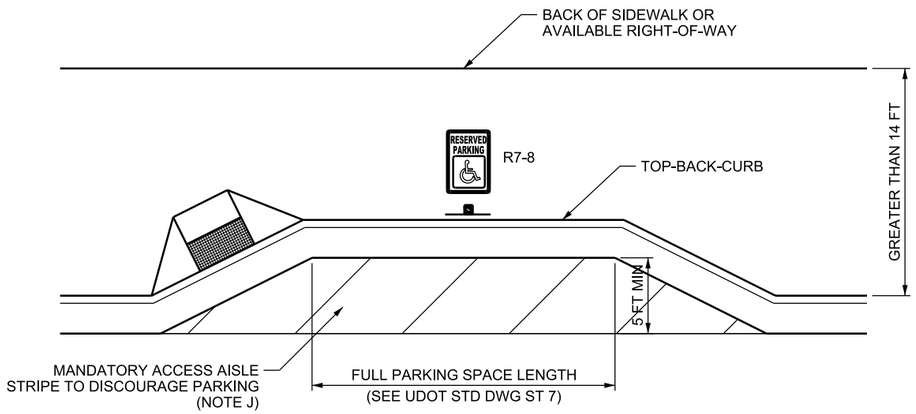


## ON-STREET ACCESS AISLE

NOTES I AND J

PROWAG R214

| ACCESSIBLE ON-STREET PARKING | |
|---|---|
| **TOTAL SPACES ON THE BLOCK PERIMETER** | **MIN REQUIRED ACCESSIBLE SPACES** |
| 1 TO 25 | 1 |
| 26 TO 50 | 2 |
| 51 TO 75 | 3 |
| 76 TO 100 | 4 |
| 101 TO 150 | 5 |
| 151 TO 200 | 6 |
| OVER 200 | 4% OF TOTAL |

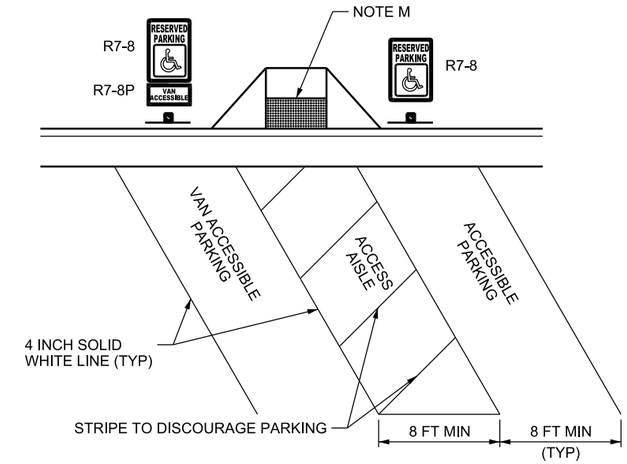


## RESERVED ACCESSIBLE PARKING

NOTES:
1. PROVIDE ONE VAN ACCESSIBLE STALL FOR EVERY EIGHT ACCESSIBLE STALLS.
2. REFER TO LOCAL JURISDICTION FOR NUMBER OF STALLS, ANGLE, STALL DEPTHS, MANUEVERING AISLE WIDTHS, AND ANY OTHER REQUIREMENTS.

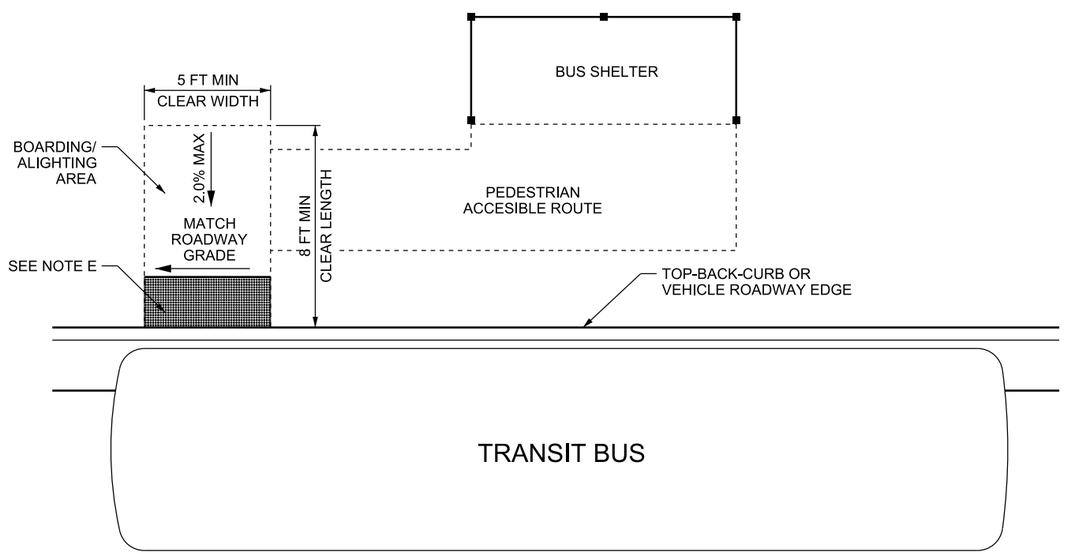


## TRANSIT SHELTER DETAIL

(BUS SHOWN FOR ILLUSTRATION, RAIL SIMILAR)
PROWAG R306

**DESIGN NOTES:**

A. PROVIDE A CONTINUOUS AND DETECTABLE EDGE TREATMENT ALONG THE STREET SIDE OF THE SIDEWALK AT ROUNDABOUTS, WHERE SIDEWALKS ARE FLUSH AGAINST THE CURB AND PEDESTRIAN STREET CROSSING IS NOT INTENDED. DO NOT USE DETECTABLE WARNING SURFACES FOR EDGE TREATMENT. PROVIDE A BOTTOM EDGE 15 IN MAXIMUM ABOVE THE SIDEWALK WHERE CHAINS, FENCING, OR RAILINGS ARE USED FOR EDGE TREATMENT. (PROWAG R306.3.1)

B. PROVIDE A PEDESTRIAN ACTIVATED SIGNAL FOR EACH MULTI-LANE SEGMENT OF EACH PEDESTRIAN STREET CROSSING, INCLUDING THE SPLITTER ISLAND AT ROUNDABOUTS WITH MULTI-LANE PEDESTRIAN STREET CROSSINGS. CLEARLY IDENTIFY WHICH PEDESTRIAN STREET CROSSING SEGMENT THE SIGNAL SERVES. (PROWAG R306.3.2)

C. PROVIDE PEDESTRIAN ACTIVATED SIGNALS AT PEDESTRIAN STREET CROSSINGS AT MULTI-LANE CHANNELIZED TURN LANES AT SIGNALIZED INTERSECTIONS OTHER THAN ROUNDABOUTS WITH PEDESTRIAN STREET CROSSINGS.

D. THE BOARDING AND ALIGHTING AREA CAN BE LOCATED EITHER WITHIN OR OUTSIDE OF THE SHELTER, WHERE A TRANSIT SHELTER IS PROVIDED. (PROWAG R308.1.1)

E. PLACE DETECTABLE WARNING SURFACES ON BOARDING PLATFORMS AT TRANSIT STOPS FOR BUSES AND RAIL VEHICLES WHERE THE EDGES OF THE BOARDING PLATFORM ARE NOT PROTECTED BY SCREENS OR GUARDS. (PROWAG R208)

F. COORDINATE THE HEIGHT OF VEHICLE FLOOR AND THE STATION PLATFORM SO AS TO MINIMIZE THE VERTICAL AND HORIZONTAL GAPS PER U.S.D.O.T. REGULATIONS (49 CFR PARTS 37 AND 38). (PROWAG R308.1.2.1)

G. IDENTIFY ACCESSIBLE PARKING SPACES BY SIGNS (MUTCD R7-8 SERIES). ACCESSIBLE PARKING SPACES SHOULD BE LOCATED WHERE THE STREET HAS THE LEAST CROWN AND GRADE AND CLOSE TO KEY DESTINATIONS. (PROWAG R309.1)

H. COUNT EACH 20.0 FT OF BLOCK PERIMETER WHERE PARKING IS PERMITTED AS ONE PARKING SPACE WHERE PARKING PAY STATIONS ARE PROVIDED AND THE PARKING IS NOT MARKED. (PROWAG R214)

I. DO NOT ENCROACH ON THE VEHICULAR TRAVEL LANE WITH THE ACCESS AISLE. THE ACCESS AISLE CAN BE ON EITHER THE DRIVER OR PASSENGER SIDE OF THE VEHICLE. (PROWAG R309.2.1)

J. AN ACCESS AISLE IS NOT REQUIRED WHERE:
- NO WORK IS BEING DONE ON THE STREET OR SIDEWALK ADJACENT TO THE PARKING SPACES OR
- THE WIDTH OF THE SIDEWALK OR THE AVAILABLE RIGHT-OF-WAY IS LESS THAN OR EQUAL TO 14.0 FT
LOCATE THE ACCESSIBLE PARKING SPACES AT THE END OF THE BLOCK FACE WHERE AN ACCESS AISLE IS NOT REQUIRED. (PROWAG R309.2.1.1, R309.2.2)

K. VERIFY THE SIDEWALK ADJACENT TO ACCESSIBLE PARALLEL PARKING SPACES IS FREE OF SIGNS, STREET FURNITURE, AND OTHER OBSTRUCTIONS TO PERMIT DEPLOYMENT OF A VAN SIDE-LIFT OR RAMP OR THE VEHICLE OCCUPANT TO TRANSFER TO A WHEELCHAIR OR SCOOTER. (PROWAG R309.2)

L. PROVIDE AN ACCESS AISLE 8.0 FT WIDE MINIMUM STREET LEVEL THE FULL LENGTH OF THE PARKING SPACE, CONNECTED TO A PEDESTRIAN ACCESS ROUTE MARK SO AS TO DISCOURAGE PARKING IN THE ACCESS AISLE WHERE PERPENDICULAR OR ANGLED PARKING IS USED. TWO PARKING SPACES ARE PERMITTED TO SHARE A COMMON ACCESS AISLE. CONNECT THE ACCESS AISLE TO THE PEDESTRIAN ACCESS ROUTE WITH CURB RAMPS OR BLENDED TRANSITIONS. DO NOT LOCATE CURB RAMPS WITHIN THE ACCESS AISLE. (PROWAG R309.3, R309.4)

M. DETECTABLE WARNING SURFACES ARE NOT REQUIRED ON CURB RAMPS AND BLENDED TRANSITIONS THAT CONNECT THE ACCESS AISLE TO THE SIDEWALK, INCLUDING WHERE THE SIDEWALK IS AT THE SAME LEVEL AS THE PARKING SPACES, UNLESS THE CURB RAMPS AND BLENDED TRANSITIONS ALSO SERVE PEDESTRIAN STREET CROSSINGS. (PROWAG R309.4)

SUPPLEMENTAL DRAWING

REVISIONS

| NO. | DATE | APPR. | REMARKS |
|---|---|---|---|
| 1 | 2/22/18 | CGW | NEW DRAWING |

UTAH DEPARTMENT OF TRANSPORTATION
STANDARD DRAWINGS FOR ROAD AND BRIDGE CONSTRUCTION
SALT LAKE CITY, UTAH

RECOMMENDED FOR APPROVAL — FEB. 22, 2018 DATE
CHAIRMAN STANDARDS COMMITTEE APPROVED — FEB. 22, 2018 DATE
DEPUTY DIRECTOR

STANDARD DRAWING TITLE
ROUNDABOUT, TRANSIT SHELTER, AND ON-STREET PARKING

STD. DWG. NO.
PA 6

06-MAR-2018 DGN File:L:\Standard Drawings\Imperial\2017 Approved_Supplemental_Issues\Supp4Approved FEB_2018\Backup2\PA 06.dgn

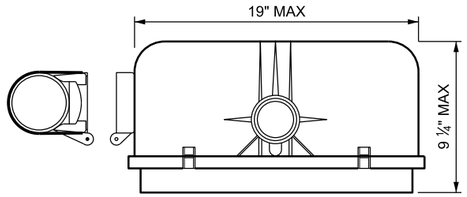


## TOP VIEW

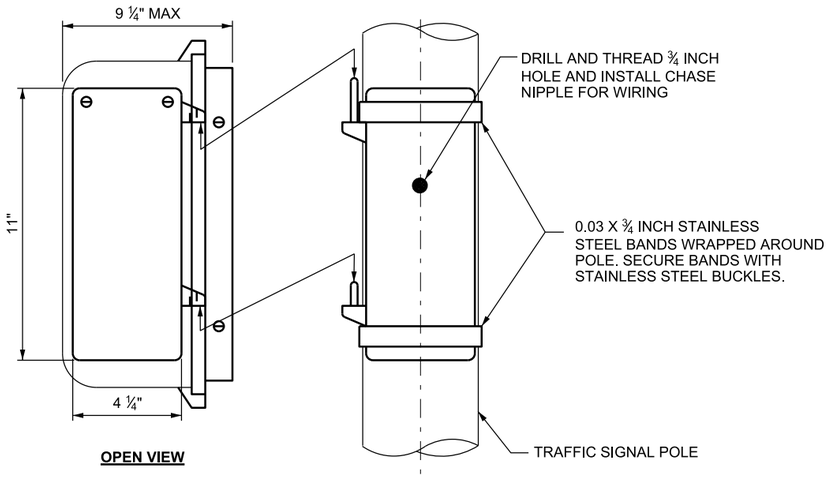


**OPEN VIEW**

## TYPICAL MOUNTING OF PEDESTRIAN SIGNAL AND PUSH BUTTON ON A SIGNAL POLE

# CLAMSHELL MOUNTING HARDWARE

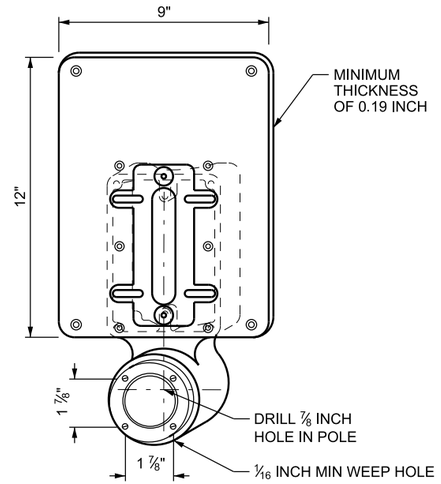


## OPTION 1

FRAME TO ACCOMMODATE 5 X 7 INCH SIGN WITH ADAPTOR PLATE FOR 9 X 12 INCH SIGN

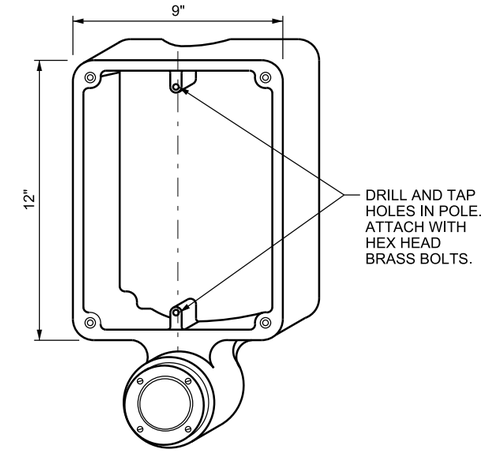


## OPTION 2

FRAME TO ACCOMMODATE 9 X 12 INCH SIGN

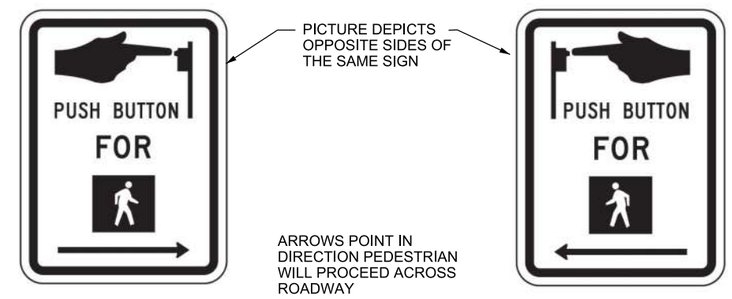


## DOUBLE-SIDED R10-3 PUSH BUTTON SIGN

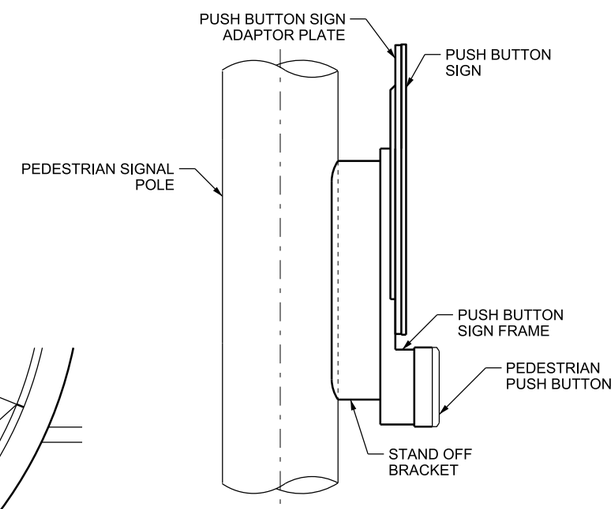


## PUSH BUTTON FRAME STAND OFF BRACKET

(OPTION 1 SHOWN)
(SEE NOTE 4)

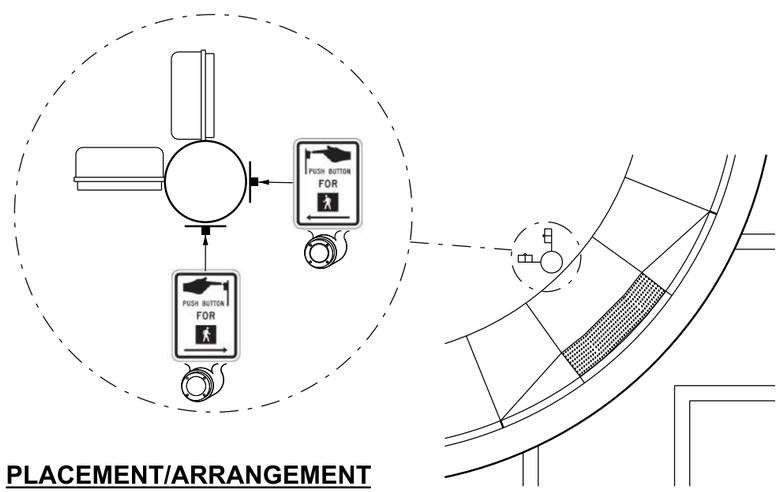


## PLACEMENT/ARRANGEMENT DETAIL

**NOTES:**

1. MOUNT PEDESTRIAN SIGNALS 9 FT - 3 INCH ± 6 INCHES FROM TURNING SPACE TO BOTTOM OF HOUSING.
2. MOUNT PUSH BUTTONS 42 ± 2 INCHES ABOVE TURNING SPACE OR UP TO A MAXIMUM HEIGHT OF 48 INCHES WITH THE APPROVAL OF THE ENGINEER.
3. LOCATE PUSH BUTTON WITHIN 10 FT OF THE ROADWAY SIDE EDGE OF THE DETECTABLE WARNING SURFACE, MEASURED FROM THE CENTER OF THE CURB CUT.
4. PROVIDE FRAME STANDOFF BRACKETS WHEN MOUNTING TWO SIGN FRAMES TO ONE PEDESTRIAN POLE. POINT ARROW ON SIGN R10-3 IN DIRECTION PEDESTRIAN WILL PROCEED ACROSS ROADWAY.
5. MOUNT PUSH BUTTON 10 INCHES OR LESS FROM EDGE OF THE TURNING SPACE SO THAT PUSH BUTTON IS ACCESSIBLE.
6. INSTALL PUSH BUTTONS AND PEDESTRIAN HEADS PARALLEL TO CROSSWALKS.
7. INSTALL PUSH BUTTONS AND PEDESTRIAN HEADS ON LARGE SIGNAL POLES WHENEVER POSSIBLE.
8. SEPARATE TWO PEDESTRIAN PUSH BUTTONS ON A CORNER BY AT LEAST 10 FT IF PUSH BUTTONS ARE NOT MOUNTED TO THE SAME POLE.

SUPPLEMENTAL DRAWING

REVISIONS

| NO. | DATE | APPR. | REMARKS |
|---|---|---|---|
| 1 | 2/22/18 | JS | UPDATED NOTES. |

UTAH DEPARTMENT OF TRANSPORTATION
STANDARD DRAWINGS FOR ROAD AND BRIDGE CONSTRUCTION
SALT LAKE CITY, UTAH

RECOMMENDED FOR APPROVAL — FEB. 22, 2018 DATE
CHAIRMAN STANDARDS COMMITTEE APPROVED — FEB. 22, 2018 DATE
DEPUTY DIRECTOR DATE

PEDESTRIAN SIGNAL ASSEMBLY
STANDARD DRAWING TITLE

STD. DWG. NO.
SL 6A

DGN File: L:\Standard Drawings\Imperial\2017 Approved_Supplemental Issues\Supp4Approved FEB_2018\Backup2\SL06A.dgn
06-MAR-2018

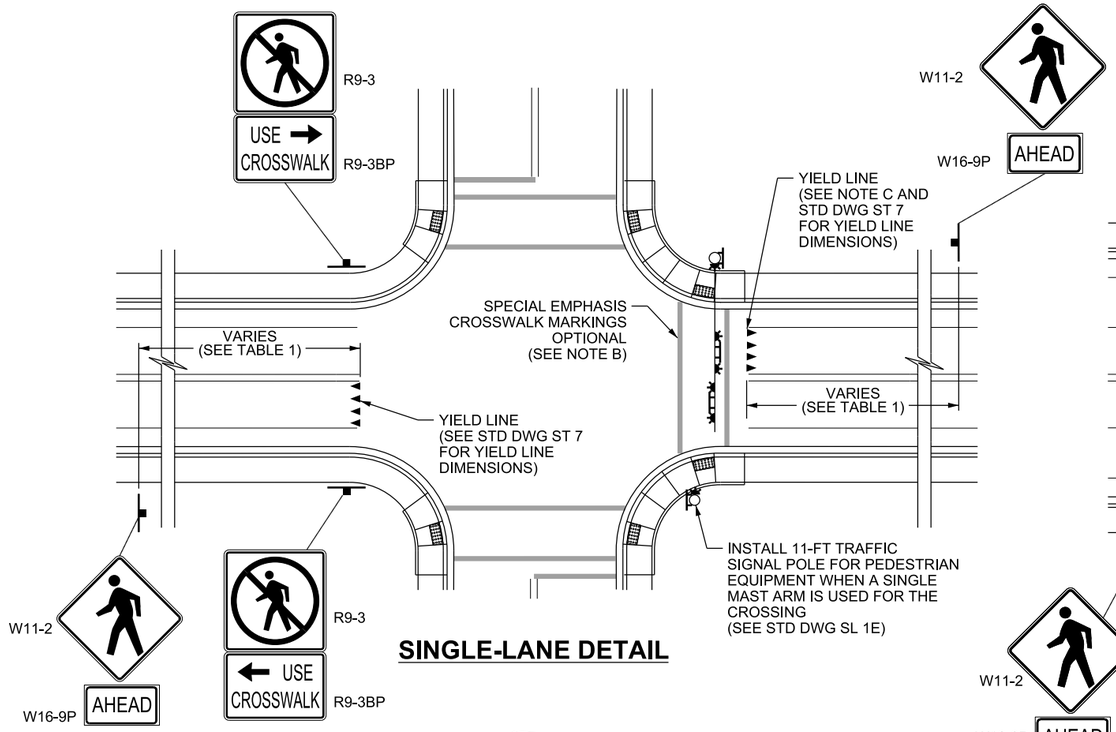


## SINGLE-LANE DETAIL

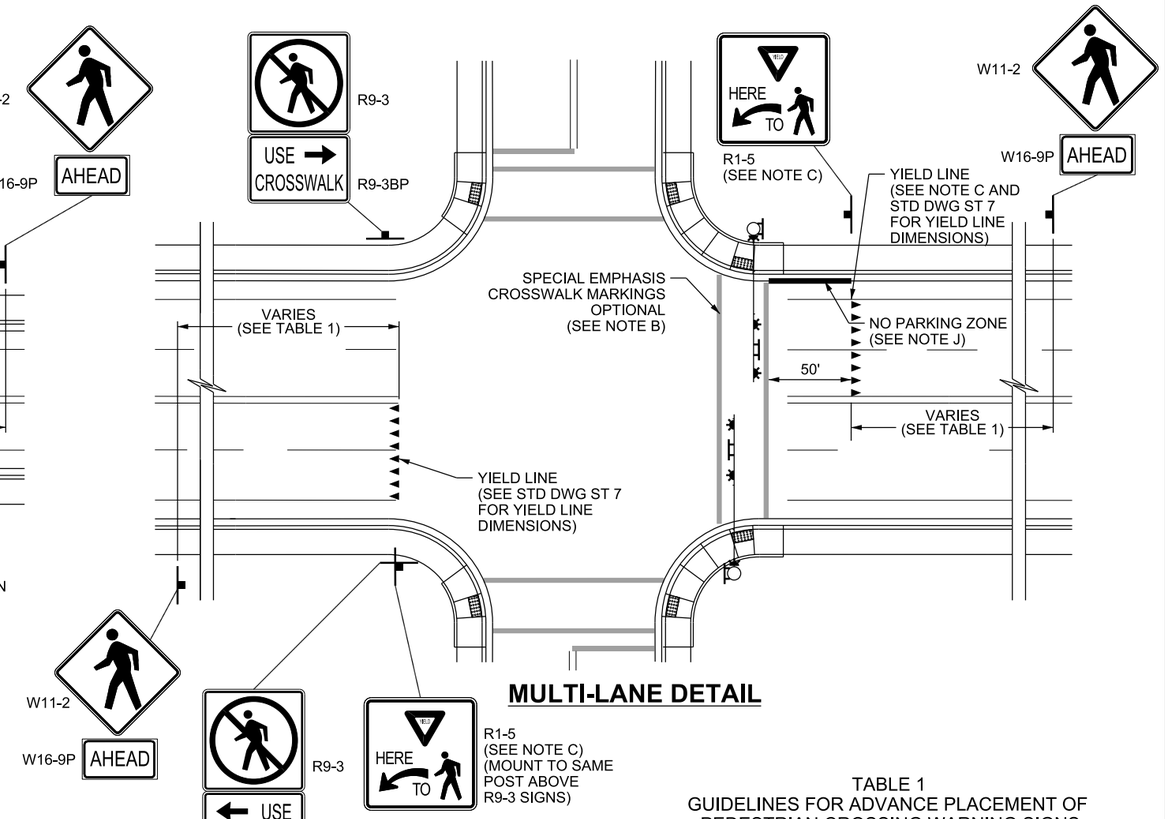


## MULTI-LANE DETAIL

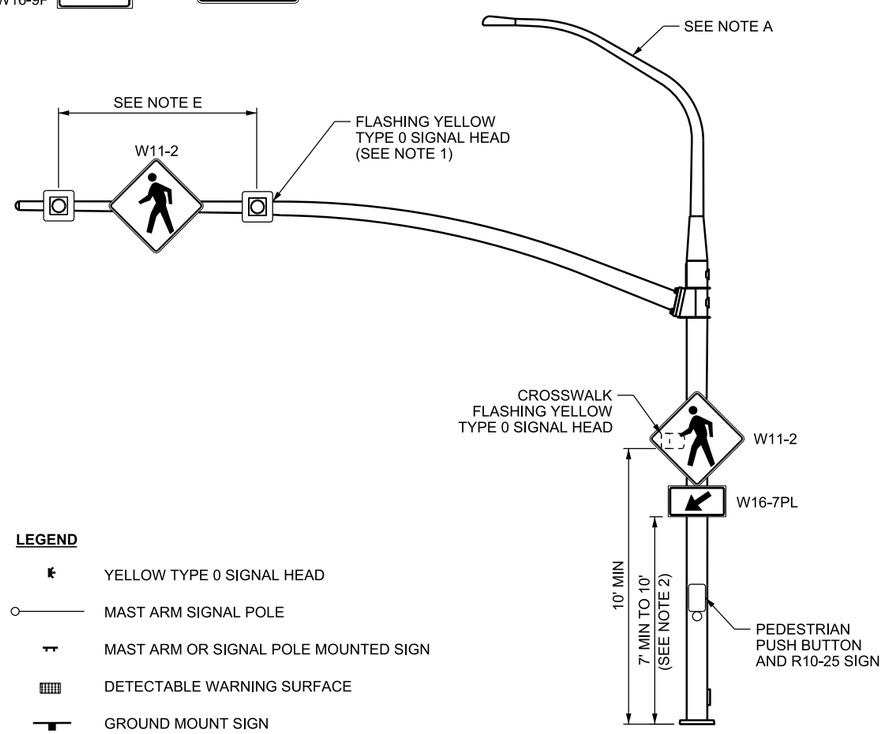


## OVERHEAD DETAIL

**LEGEND**

- YELLOW TYPE 0 SIGNAL HEAD
- MAST ARM SIGNAL POLE
- MAST ARM OR SIGNAL POLE MOUNTED SIGN
- DETECTABLE WARNING SURFACE
- GROUND MOUNT SIGN

TABLE 1
GUIDELINES FOR ADVANCE PLACEMENT OF
PEDESTRIAN CROSSING WARNING SIGNS
(SEE UTAH MUTCD TABLE 2C-4 FOR COMPLETE TABLE)

| POSTED SPEED | ADVANCE PLACEMENT DISTANCE |
|---|---|
| 20-35 MPH | 100 FT |
| 40 MPH | 125 FT |
| 45 MPH | 175 FT |

**NOTES:**

1. DO NOT PLACE RETROREFLECTIVE TAPE ON TYPE 0 SIGNAL HEAD BACKPLATES.
2. INCREASE MOUNTING HEIGHT OF W11-2 SIGN AND W16-7PL PLAQUE IF BLOCKED BY OTHER SIGNS OR OBSTRUCTIONS.

**DESIGN-ONLY NOTES:**

A. INSTALL STREET LIGHTING UNLESS DIRECTED OTHERWISE BY REGION TRAFFIC OPERATIONS ENGINEER.

B. USE SPECIAL EMPHASIS CROSSWALK MARKINGS WHEN REQUIRED BY REGION TRAFFIC OPERATIONS ENGINEER. SEE STD DWG ST 7.

C. PLACE YIELD LINE 4 FT FROM CROSSWALK AT INTERSECTIONS ON SINGLE-LANE APPROACHES OR 50 FT FOR MULTI-LANE APPROACHES. USE "YIELD HERE TO PEDESTRIANS" R1-5 SIGN FOR MULTI-LANE APPROACHES.

D. REFER TO UTAH MUTCD PART 7 FOR REQUIREMENTS AT SCHOOL CROSSINGS.

E. PROVIDE A TYPE 0 SIGNAL HEAD CENTERED OVER EACH THRU LANE, FOR MULTIPLE THRU LANE APPROACHES. PROVIDE W11-2 SIGN CENTERED BETWEEN ALL TYPE 0 SIGNAL HEADS.

CENTER W11-2 SIGN IN THE THRU LANE AND PROVIDE TWO TYPE 0 SIGNAL HEADS SPACED AT LEAST 8 FT APART, FOR SINGLE THRU LANE APPROACHES.

F. DO NOT INSTALL FLASHING BEACON CROSSWALK ON ROADWAYS WITH SPEEDS GREATER THAN 45 MPH UNLESS DIRECTED BY REGION TRAFFIC OPERATIONS ENGINEER. SEE STD DWG DD 18.

G. PLACE FLASHING BEACON ASSEMBLIES ON A SINGLE OR TWO SEPARATE MAST ARMS.

H. DO NOT INSTALL FLASHING BEACON CROSSWALK IN A REDUCED SPEED SCHOOL ZONE.

I. A MULTI-LANE APPROACH HAS TWO OR MORE LANES MOVING TOWARD THE INTERSECTION, INCLUDING TURNING LANES.

J. PLACE "NO PARKING" SIGNS TO PROHIBIT PARKING 50 FT BEFORE CROSSWALK. NO ACCESSES ARE ALLOWED IN THIS AREA.

SUPPLEMENTAL DRAWING

REVISIONS

| NO. | DATE | APPR. | REMARKS |
|---|---|---|---|
| 1 | 2/22/18 | JS | UPDATED CALLOUTS, NOTES AND GRAPHICS. |

**UTAH DEPARTMENT OF TRANSPORTATION**
STANDARD DRAWINGS FOR ROAD AND BRIDGE CONSTRUCTION
SALT LAKE CITY, UTAH

RECOMMENDED FOR APPROVAL — FEB. 22 2018 DATE
CHAIRMAN STANDARDS COMMITTEE APPROVED — FEB. 22 2018 DATE
DEPUTY DIRECTOR

OVERHEAD FLASHING BEACON AT AN INTERSECTION CROSSWALK
STANDARD DRAWING TITLE

STD. DWG. NO.
SL 6D

DGN File:L:\Standard_Drawings\Imperial\2017 Approved_Supplemental_Issues\Supp4Approved FEB.2018\Backup2\SL06D.dgn
06-MAR-2018

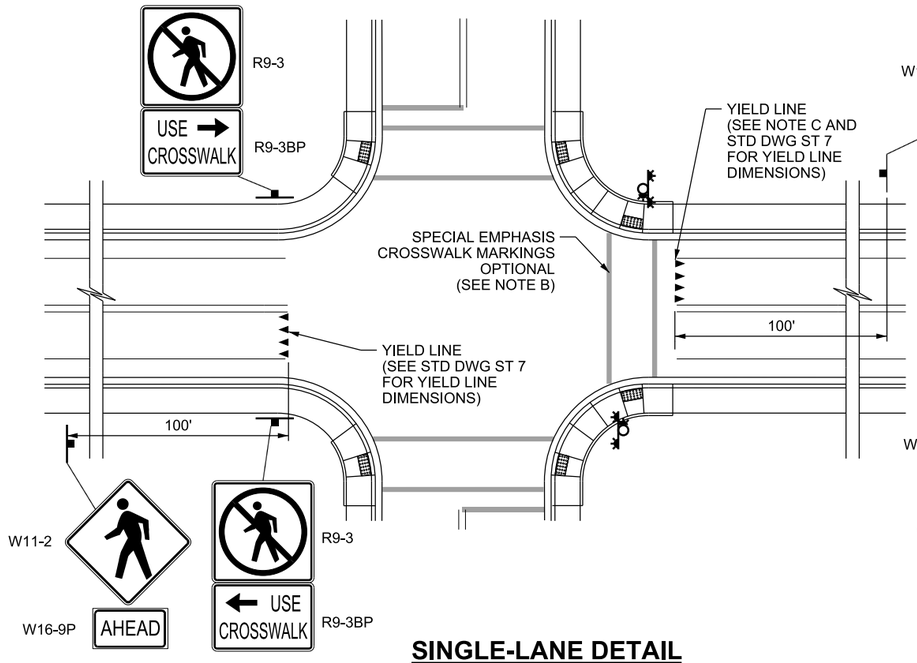


## SINGLE-LANE DETAIL

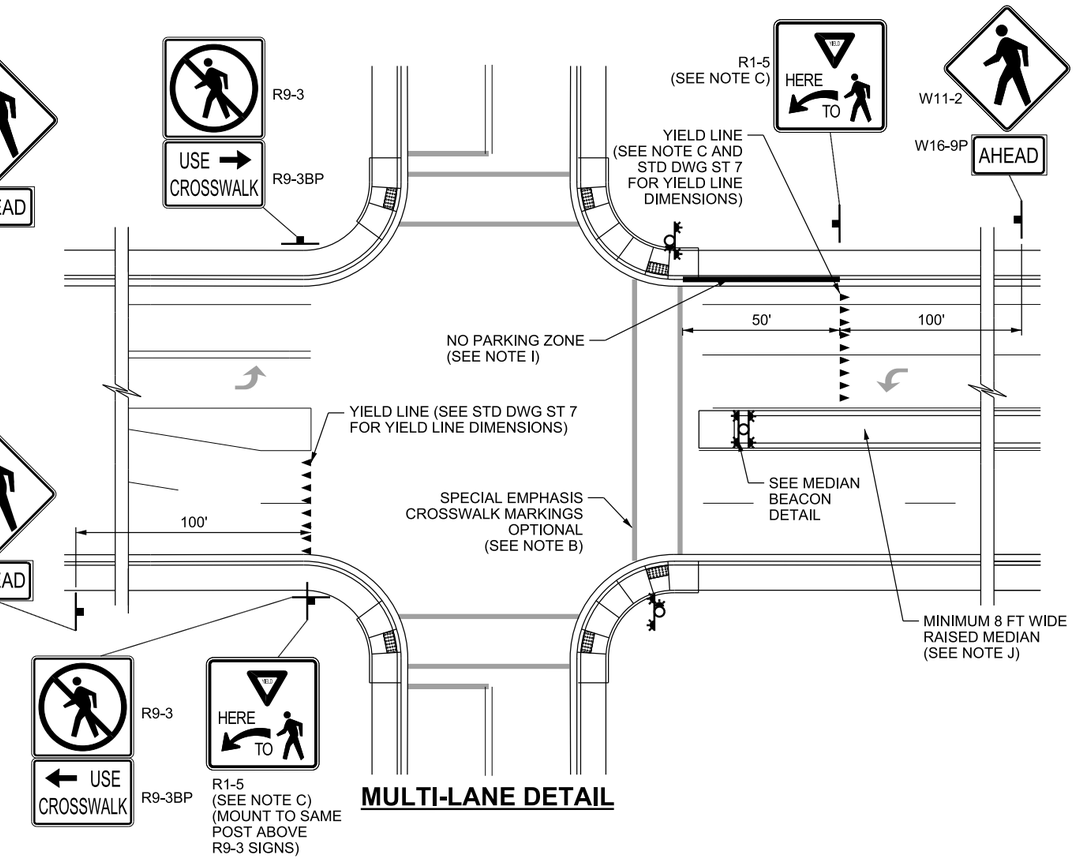


## MULTI-LANE DETAIL

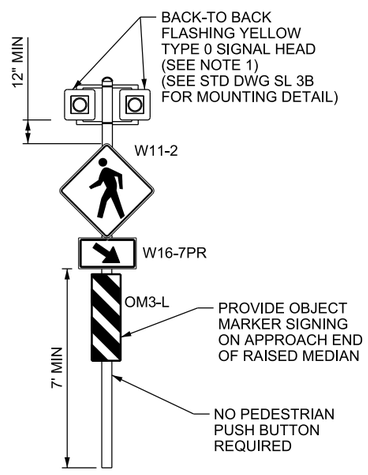


## MEDIAN BEACON DETAIL

15 FT TRAFFIC SIGNAL POLE (SEE STD DWG SL 1E)

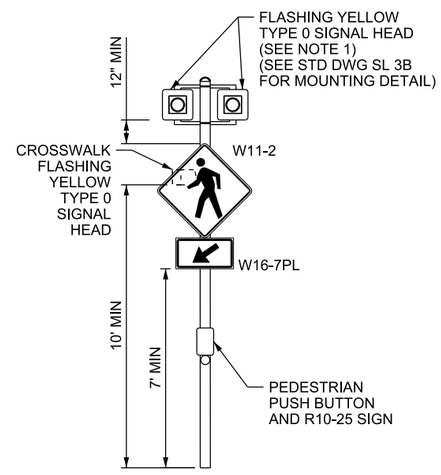


## FLASHING BEACON DETAIL

15 FT TRAFFIC SIGNAL POLE (SEE NOTE H AND STD DWG SL 1E)

**LEGEND**

- YELLOW TYPE 0 SIGNAL HEAD
- DETECTABLE WARNING SURFACE
- GROUND MOUNT SIGN
- FLASHING BEACON
- FLASHING BEACON: BACK-TO-BACK (SEE NOTE K)

**NOTES:**

1. DO NOT PLACE RETROREFLECTIVE TAPE ON TYPE 0 SIGNAL HEAD BACKPLATES.

**DESIGN-ONLY NOTES:**

A. INSTALL STREET LIGHTING UNLESS DIRECTED OTHERWISE BY REGION TRAFFIC OPERATIONS ENGINEER.

B. USE SPECIAL EMPHASIS CROSSWALK MARKINGS WHEN REQUIRED BY REGION TRAFFIC OPERATIONS ENGINEER. SEE STD DWG ST 7.

C. PLACE YIELD LINE 4 FT FROM CROSSWALK AT INTERSECTIONS ON SINGLE-LANE APPROACHES OR 50 FT FOR MULTI-LANE APPROACHES. USE "YIELD HERE TO PEDESTRIANS" R1-5 SIGN FOR MULTI-LANE APPROACHES.

D. REFER TO UTAH MUTCD PART 7 FOR REQUIREMENTS AT SCHOOL CROSSINGS.

E. DO NOT USE POST-MOUNTED FLASHING BEACON CROSSWALK WHEN POSTED SPEED EXCEEDS 35 MPH UNLESS OTHERWISE DIRECTED BY REGION TRAFFIC OPERATIONS ENGINEER.

F. DO NOT INSTALL FLASHING BEACON CROSSWALK WITHIN A REDUCED SPEED SCHOOL ZONE.

G. A MULTI-LANE APPROACH HAS TWO OR MORE LANES MOVING TOWARD THE INTERSECTION, INCLUDING TURNING LANES.

H. DO NOT INSTALL POST-MOUNTED FLASHING BEACONS WHERE THERE ARE THREE OR MORE THRU LANES IN ONE DIRECTION. EACH LANE, INCLUDING TURN LANES, MUST HAVE AN ADJACENT POST-MOUNTED FLASHING BEACON.

I. PLACE "NO PARKING" SIGNS TO PROHIBIT PARKING 50 FT BEFORE CROSSWALK. NO ACCESSES ARE ALLOWED IN THIS AREA.

J. RAISED MEDIAN CONFIGURATION DETERMINED BY LOCATION NEEDS. SEE GW SERIES STD DWGS. MEET LATERAL OFFSET REQUIREMENTS.

K. BACK-TO-BACK CONSISTS OF W11-2 AND W16-7PL SIGNS AND FLASHING BEACONS FACING OPPOSITE DIRECTIONS MOUNTED ON THE SAME POLE.

SUPPLEMENTAL DRAWING

REVISIONS

| NO. | DATE | APPR. | REMARKS |
|---|---|---|---|
| 1 | 2/22/18 | JS | UPDATED NOTES, CALLOUTS AND GRAPHICS. DELETED RRFB FROM STD DWGS. |

UTAH DEPARTMENT OF TRANSPORTATION
STANDARD DRAWINGS FOR ROAD AND BRIDGE CONSTRUCTION
SALT LAKE CITY, UTAH

RECOMMENDED FOR APPROVAL — FEB. 22, 2018 DATE
CHAIRMAN STANDARDS COMMITTEE APPROVED — FEB. 22, 2018 DATE
DEPUTY DIRECTOR

STANDARD DRAWING TITLE
POST-MOUNTED FLASHING BEACON AT AN INTERSECTION CROSSWALK

STD. DWG. NO.
SL 6E

DGN File: L:\Standard Drawings\Imperial\2017 Approved_Supplemental_Issues\Supp4Approved FEB.2018\Backup2\SL06E.dgn
06-MAR-2018

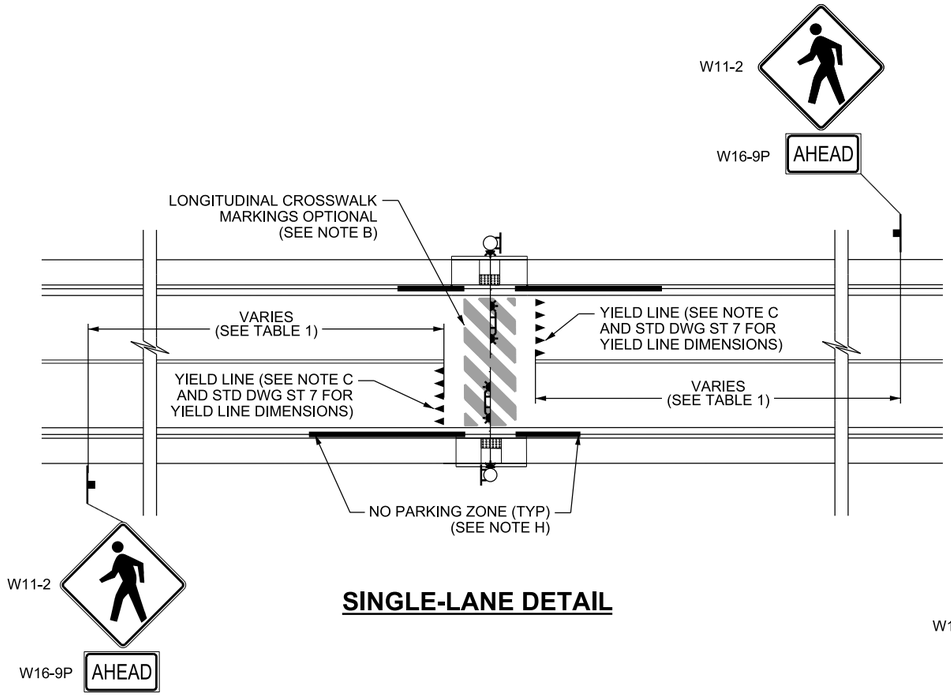


## SINGLE-LANE DETAIL

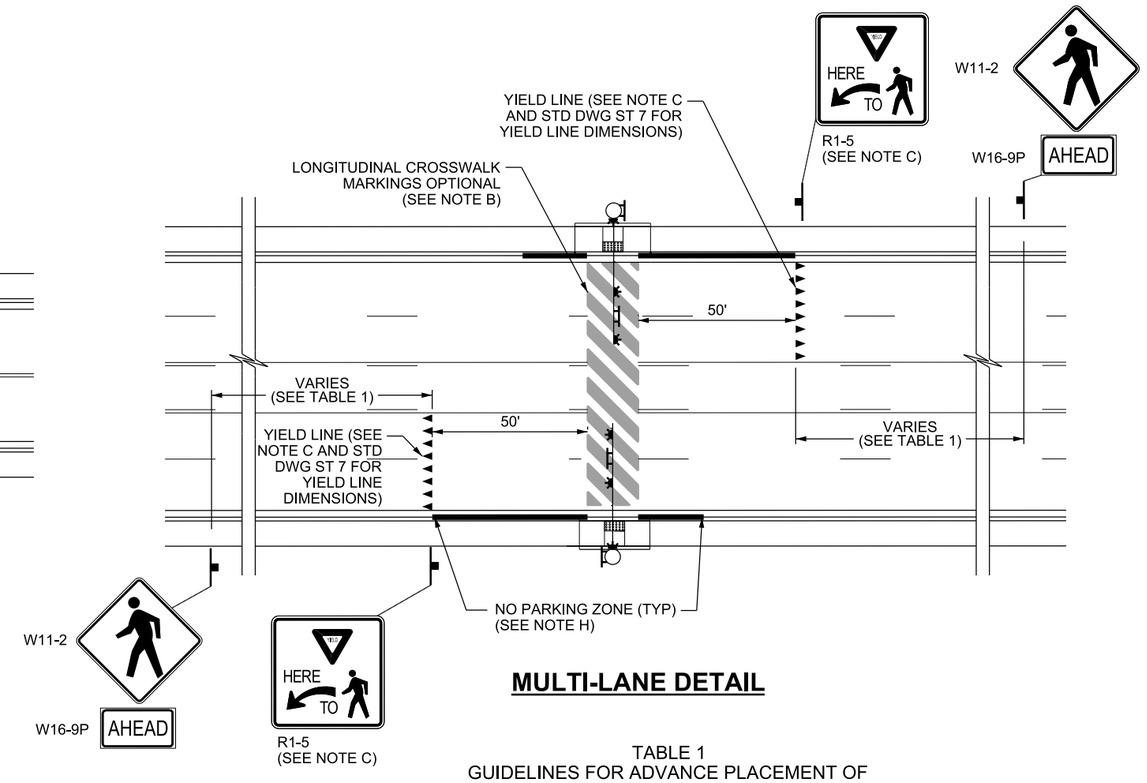


## MULTI-LANE DETAIL

TABLE 1
GUIDELINES FOR ADVANCE PLACEMENT OF
PEDESTRIAN CROSSING WARNING SIGNS
(SEE UTAH MUTCD TABLE 2C-4 FOR COMPLETE TABLE)

| POSTED SPEED | ADVANCE PLACEMENT DISTANCE |
|---|---|
| 20-35 MPH | 100 FT |
| 40 MPH | 125 FT |
| 45 MPH | 175 FT |

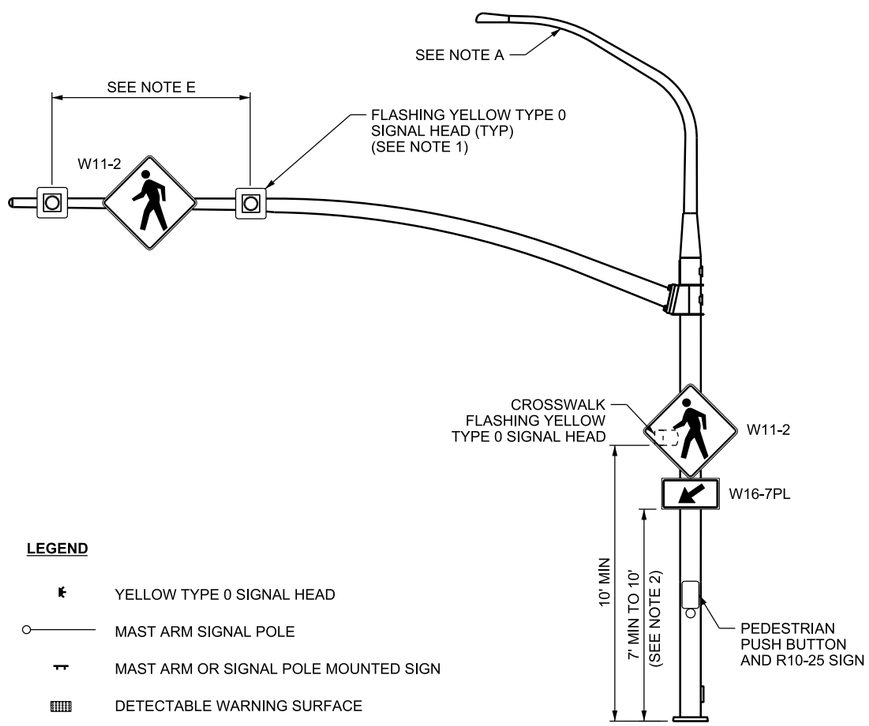


## OVERHEAD DETAIL

**LEGEND**

- YELLOW TYPE 0 SIGNAL HEAD
- MAST ARM SIGNAL POLE
- MAST ARM OR SIGNAL POLE MOUNTED SIGN
- DETECTABLE WARNING SURFACE
- GROUND MOUNT SIGN

**NOTES:**

1. DO NOT PLACE RETROREFLECTIVE TAPE ON TYPE 0 SIGNAL HEAD BACKPLATES.
2. INCREASE MOUNTING HEIGHT OF W11-2 SIGN AND W16-7PL PLAQUE IF BLOCKED BY OTHER SIGNS OR OBSTRUCTIONS. USE A 10 FT MOUNTING HEIGHT TO BOTTOM OF W16-7PL PLAQUE IN MULTI-LANE SITUATIONS TO PREVENT VISUAL BLOCKING BY R1-5 SIGN.

**DESIGN-ONLY NOTES:**

A. INSTALL STREET LIGHTING UNLESS DIRECTED OTHERWISE BY REGION TRAFFIC OPERATIONS ENGINEER.

B. USE LONGITUDINAL CROSSWALK MARKINGS WHEN REQUIRED BY REGION TRAFFIC OPERATIONS ENGINEER.

C. PLACE YIELD LINE 4 FT FROM CROSSWALK ON SINGLE-LANE APPROACHES OR 50 FT FOR MULTI-LANE APPROACHES. USE "YIELD HERE TO PEDESTRIANS" R1-5 SIGN FOR MULTI-LANE APPROACHES.

D. REFER TO UTAH MUTCD PART 7 FOR REQUIREMENTS AT SCHOOL CROSSINGS.

E. CENTER SIGNAL HEAD IN EACH THRU LANE. PROVIDE W11-2 SIGN BETWEEN ALL SIGNAL HEADS. FOR SINGLE THRU LANE APPROACHES, CENTER W11-2 SIGN IN THE LANE AND SPACE SIGNAL HEADS AT LEAST 8 FT APART.

F. DO NOT INSTALL FLASHING BEACON CROSSWALK ON ROADWAYS WITH SPEEDS GREATER THAN 45 MPH UNLESS DIRECTED BY REGION TRAFFIC OPERATIONS ENGINEER. SEE STD DWG DD 18.

G. PLACE FLASHING BEACON ASSEMBLIES ON A SINGLE OR TWO SEPARATE MAST ARMS.

H. PLACE "NO PARKING SIGNS" TO PROHIBIT PARKING 50 FT BEFORE CROSSWALK AND 20 FT AFTER CROSSWALK FOR EACH APPROACH. NO ACCESSES ARE ALLOWED IN THIS AREA.

I. DO NOT INSTALL FLASHING BEACON CROSSWALK WITHIN A REDUCED SPEED SCHOOL ZONE.

J. A MULTI-LANE APPROACH HAS TWO OR MORE LANES MOVING TOWARD THE INTERSECTION, INCLUDING TURNING LANES.

SUPPLEMENTAL DRAWING

REVISIONS

| NO. | DATE | APPR. | REMARKS |
|---|---|---|---|
| 1 | 2/22/18 | JS | UPDATED CALLOUTS, NOTES AND GRAPHICS. DELETED YIELD LINE DISTANCE TABLE. |

UTAH DEPARTMENT OF TRANSPORTATION
STANDARD DRAWINGS FOR ROAD AND BRIDGE CONSTRUCTION
SALT LAKE CITY, UTAH

RECOMMENDED FOR APPROVAL — FEB. 22, 2018 DATE
CHAIRMAN STANDARDS COMMITTEE APPROVED — FEB. 22, 2018 DATE
DEPUTY DIRECTOR

OVERHEAD FLASHING BEACON AT A MIDBLOCK CROSSWALK
STANDARD DRAWING TITLE

STD. DWG. NO.
SL 6F

DGN File: L:\Standard_Drawings\Imperial\2017 Approved_Supplemental_Issues\Supp4Approved FEB.2018\Backup2\SL06F.dgn
06-MAR-2018

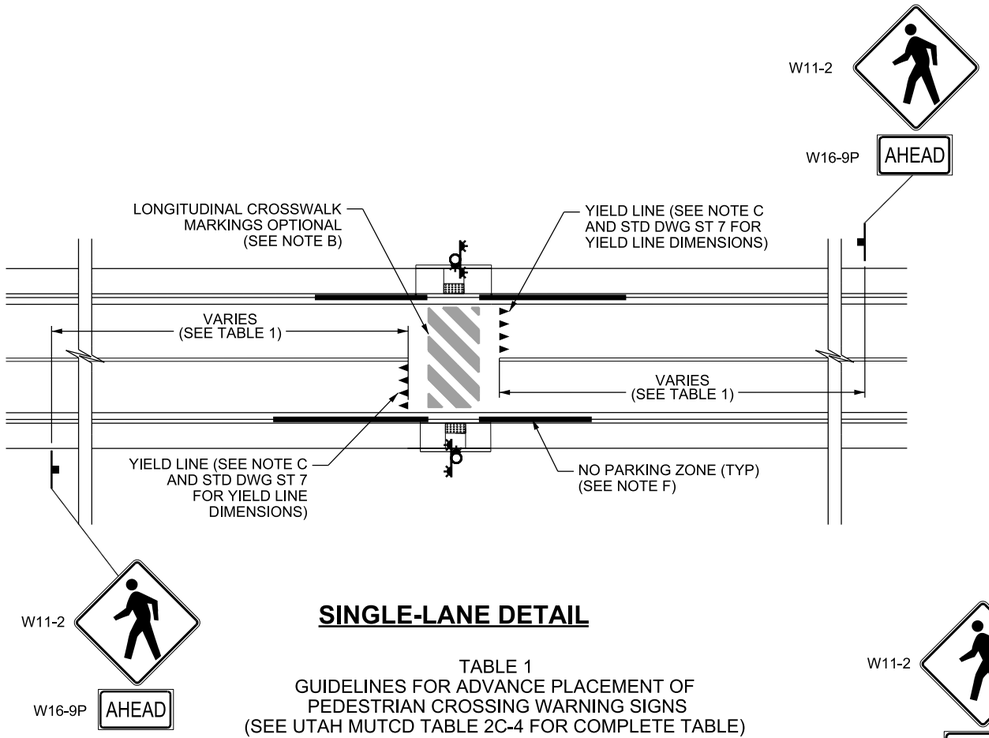


## SINGLE-LANE DETAIL

TABLE 1
GUIDELINES FOR ADVANCE PLACEMENT OF PEDESTRIAN CROSSING WARNING SIGNS
(SEE UTAH MUTCD TABLE 2C-4 FOR COMPLETE TABLE)

| POSTED SPEED | ADVANCE PLACEMENT DISTANCE |
|---|---|
| 20-35 MPH | 100 FT |
| 40 MPH (SEE NOTE E) | 125 FT |

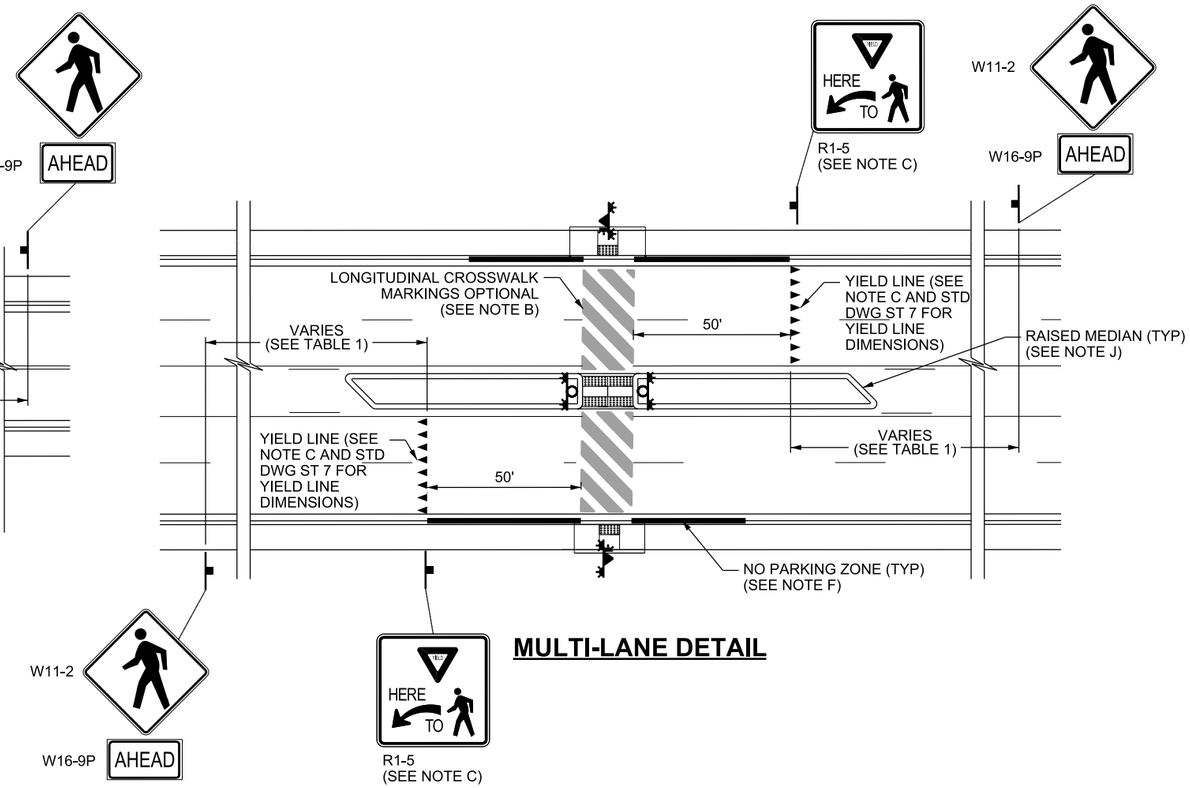


## MULTI-LANE DETAIL

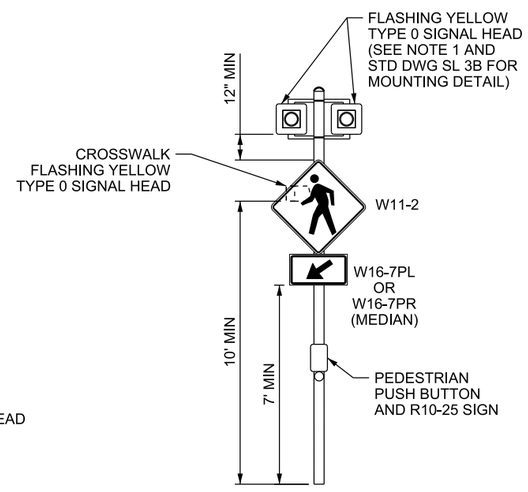


## FLASHING BEACON DETAIL

15 FT TRAFFIC SIGNAL POLE (SEE NOTE I AND STD DWG SL 1E)

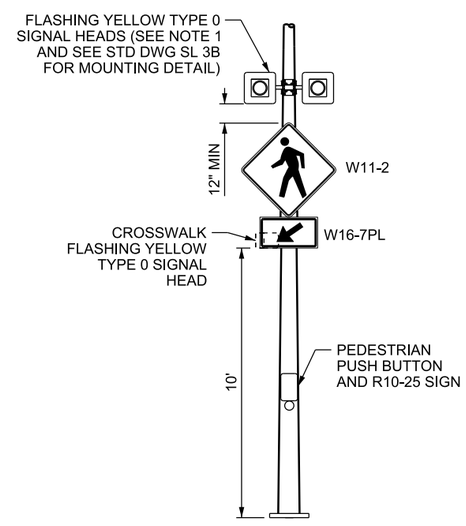


## HIGH-MOUNT FLASHING BEACON DETAIL

LUMINAIRE POLE (SEE NOTE I AND STD DWG SL 5B)

**LEGEND**

- YELLOW TYPE 0 SIGNAL HEAD
- DETECTABLE WARNING SURFACE
- GROUND MOUNT SIGN
- FLASHING BEACON
- HIGH-MOUNT FLASHING BEACON

**NOTES:**

1. DO NOT PLACE RETROREFLECTIVE TAPE ON TYPE 0 SIGNAL HEAD BACKPLATES.
2. INCREASE MOUNTING HEIGHT OF W11-2 SIGN AND W16-7PL PLAQUE IF BLOCKED BY OTHER SIGNS OR OBSTRUCTIONS.

**DESIGN-ONLY NOTES:**

A. INSTALL STREET LIGHTING UNLESS DIRECTED OTHERWISE BY REGION TRAFFIC OPERATIONS ENGINEER.

B. USE LONGITUDINAL CROSSWALK MARKINGS WHEN REQUIRED BY REGION TRAFFIC OPERATIONS ENGINEER.

C. PLACE YIELD LINE 4 FT FROM CROSSWALK ON SINGLE-LANE APPROACHES OR 50 FT FOR MULTI-LANE APPROACHES. USE "YIELD HERE TO PEDESTRIANS" R1-5 SIGN FOR MULTI-LANE APPROACHES.

D. REFER TO UTAH MUTCD PART 7 FOR REQUIREMENTS AT SCHOOL CROSSINGS.

E. DO NOT USE POST-MOUNTED FLASHING BEACON CROSSWALK WHEN POSTED SPEED EXCEEDS 35 MPH UNLESS OTHERWISE DIRECTED BY REGION TRAFFIC OPERATIONS ENGINEER.

F. PLACE "NO PARKING" SIGNS TO PROHIBIT PARKING 50 FT BEFORE CROSSWALK AND 20 FT AFTER CROSSWALK FOR EACH APPROACH. NO ACCESSES ARE ALLOWED IN THIS AREA.

G. A MULTI-LANE APPROACH HAS TWO OR MORE LANES MOVING TOWARD THE INTERSECTION, INCLUDING TURNING LANES.

H. DO NOT INSTALL FLASHING BEACON CROSSWALK WITHIN A REDUCED SPEED SCHOOL ZONE.

I. DO NOT INSTALL POST-MOUNTED FLASHING BEACONS WHERE THERE ARE THREE OR MORE THRU LANES IN ONE DIRECTION. EACH LANE, INCLUDING TURN LANES, MUST HAVE AN ADJACENT POST-MOUNTED FLASHING BEACON.

J. RAISED MEDIAN DIMENSIONS DETERMINED BY LOCATION NEEDS. SEE GW SERIES STD DWGS. MEET LATERAL OFFSET REQUIREMENTS.

SUPPLEMENTAL DRAWING

REVISIONS

| NO. | DATE | APPR. | REMARKS |
|---|---|---|---|
| 1 | 2/22/18 | JS | REVISED CALLOUTS, NOTES AND GRAPHICS. DELETED RRFB FROM STD DWGS. DELETED YIELD LINE DISTANCE TABLE. |

**UTAH DEPARTMENT OF TRANSPORTATION**
STANDARD DRAWINGS FOR ROAD AND BRIDGE CONSTRUCTION
SALT LAKE CITY, UTAH

RECOMMENDED FOR APPROVAL — FEB. 22, 2018 DATE
CHAIRMAN STANDARDS COMMITTEE APPROVED — FEB. 22, 2018 DATE
DEPUTY DIRECTOR

POST-MOUNTED FLASHING BEACON AT A MIDBLOCK CROSSWALK
STANDARD DRAWING TITLE

STD. DWG. NO.
SL 6G

DGN File:L:\Standard Drawings\Imperial\2017 Approved_Supplemental Issues\Supp4approved FEB.2018\Backup2\SL866.dgn
06-MAR-2018

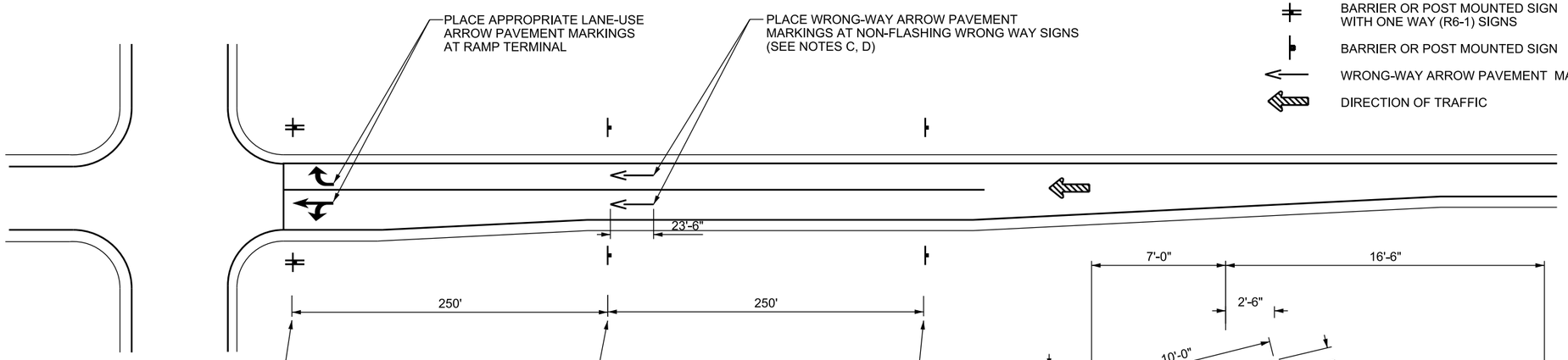


**LEGEND**

- BARRIER OR POST MOUNTED SIGN WITH ONE WAY (R6-1) SIGNS
- BARRIER OR POST MOUNTED SIGN
- WRONG-WAY ARROW PAVEMENT MARKING
- DIRECTION OF TRAFFIC

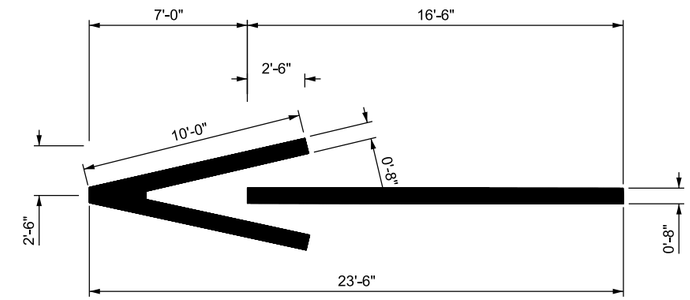


## WRONG-WAY ARROW PAVEMENT MARKING DETAIL

SEE NOTES C, D

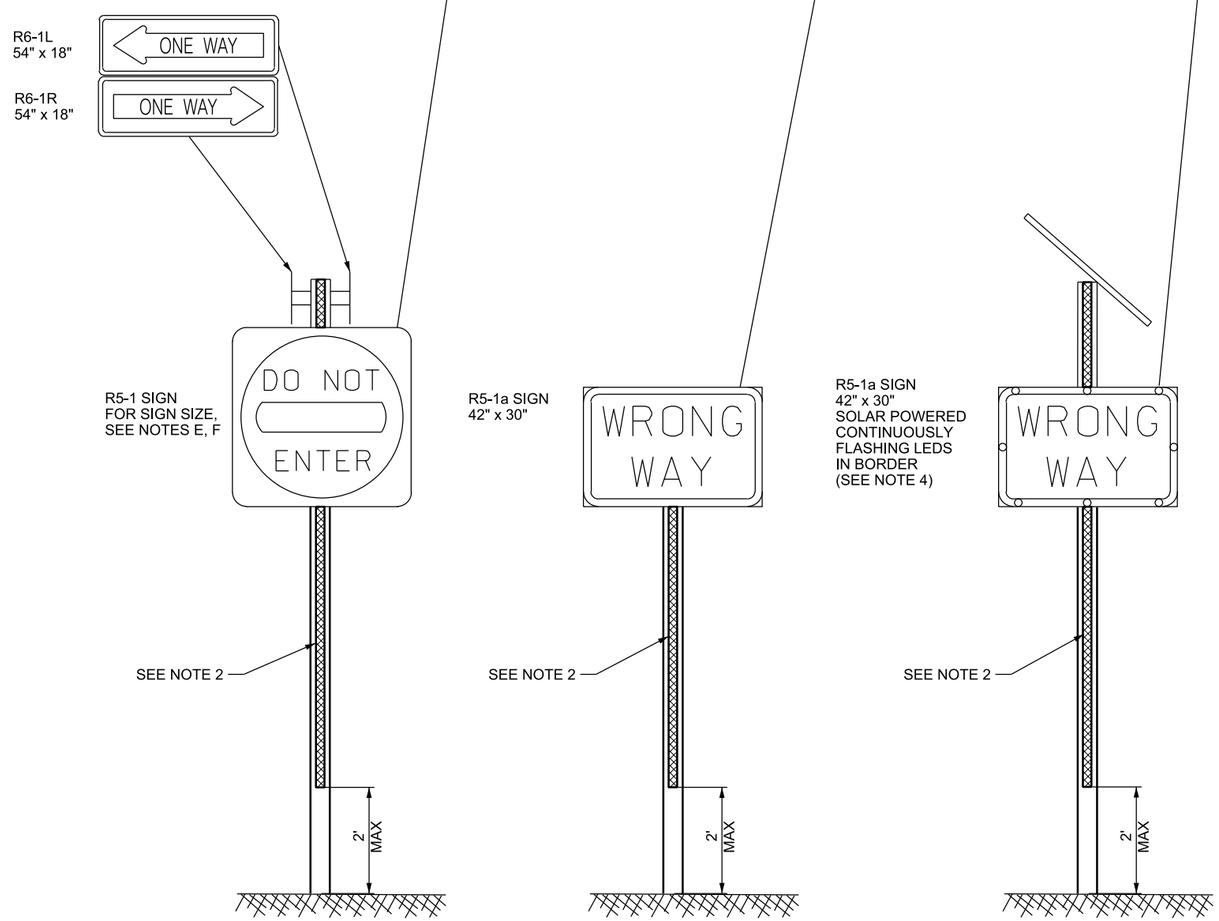


**NOTES:**

1. SEE STD DWG SN 2 SERIES FOR MOUNTING HEIGHT AND LATERAL OFFSET REQUIREMENTS.
2. PLACE A 4 INCH WIDE RED RETROREFLECTIVE STRIP ON ALL OFF RAMP SIGN POSTS ON THE SIDE FACING THE WRONG WAY TRAFFIC. THIS INCLUDES ALL REGULATORY, GUIDE, AND WARNING SIGNS ON THE OFF RAMP.
3. PLACE RED RETROREFLECTIVE SHEETING ON ALL DELINEATION (DELINEATOR POST OR BARRIER MOUNT) ON THE SIDE FACING THE WRONG WAY TRAFFIC FROM THE RAMP TERMINAL TO THE PHYSICAL GORE.
4. USE ONLY WHITE LED'S WITH A MAXIMUM DIAMETER OF ¼ INCH. USE AN AUTO-DIMMING DEVICE TO REGULATE LED INTENSITY.
5. ORIENT THE DO NOT ENTER (R5-1) SIGN TO FACE ONCOMING/ENTERING TRAFFIC.
6. ORIENT THE DO NOT ENTER (R5-1) SIGN AWAY FROM ADJACENT TRAFFIC WHEN INSTALLED ON A TWO-WAY RAMP.

**DESIGN-ONLY NOTES:**

A. RAMPS, AS DEFINED FOR THIS STANDARD DRAWING, INCLUDE FREEWAY OFF-RAMPS, DIVIDED HIGHWAYS, ONE-WAY HIGHWAYS, AND OTHER HIGHWAYS WHERE A VEHICLE MAY ENTER FROM THE WRONG DIRECTION.

B. THE WRONG WAY SIGNS MAY BE PLACED ON THE BACK OF OTHER OFF RAMP SIGNS AS LONG AS SPACING REQUIREMENTS ARE MET AND THE SIGN SHAPE IS NOT OBSTRUCTED.

C. PLACE A WRONG-WAY ARROW PAVEMENT MARKING IN EACH LANE ADJACENT TO THE NON-FLASHING WRONG WAY SIGNS AS SHOWN IN THE DETAIL.

D. THE WRONG-WAY ARROW PAVEMENT MARKING MAY BE MOVED TO A LOCATION ADJACENT TO THE FLASHING LED WRONG WAY SIGNS WHEN THE OFF RAMP STORAGE LANES FOR TURN MOVEMENTS EXTEND UP THE OFF RAMP BEYOND THE NON-FLASHING WRONG WAY SIGNS.

E. USE A 36 INCH DO NOT ENTER (R5-1) SIGN AND EITHER A 48 INCH STOP (R1-1) SIGN OR 48 INCH YIELD (R1-2) SIGN SO AS NOT TO OBSCURE THE STOP OR YIELD SIGN SHAPE WHEN THE OFF RAMP INTERSECTION IS STOP OR YIELD CONTROLLED.

F. USE A 48 INCH DO NOT ENTER (R5-1) SIGN WHEN THE OFF RAMP INTERSECTION IS SIGNAL CONTROLLED.

G. PLACE STANDARD LANE-USE ARROW PAVEMENT MARKINGS FOR ALL MOVEMENTS AT THE RAMP TERMINAL.

H. PLACE TWO SIGNS AT EACH LOCATION, ONE ON EACH SIDE OF THE OFF RAMP, FOR THE DO NOT ENTER, NON-FLASHING WRONG WAY, AND THE FLASHING LED WRONG WAY SIGNS.

I. FLASHING LED SIGN ASSEMBLIES MAY BE OMMITTED UPON APPROVAL OF THE REGION TRAFFIC ENGINEER WHEN GEOMETRIC CONSIDERATIONS OR OTHER FACTORS AFFECT THEIR INSTALLATION.

SUPPLEMENTAL DRAWING

REVISIONS

| NO. | DATE | APPR. | REMARKS |
|---|---|---|---|
| 1 | 2/22/18 | CGW | WRONG WAY SIGN SIZE UPDATED FOR CONSISTENCY. NOTES 4 AND I UPDATED |

**UTAH DEPARTMENT OF TRANSPORTATION**
STANDARD DRAWINGS FOR ROAD AND BRIDGE CONSTRUCTION
SALT LAKE CITY, UTAH

RECOMMENDED FOR APPROVAL — FEB. 22, 2018 DATE
CHAIRMAN STANDARDS COMMITTEE APPROVED — FEB. 22, 2018 DATE
DEPUTY DIRECTOR

WRONG WAY SIGNING, DELINEATION, AND MARKINGS FOR OFF-RAMPS AND DIVIDED HIGHWAYS
STANDARD DRAWING TITLE

STD. DWG. NO.
SN 2C

DGN File:L:\Standard_Drawings\Imperial\2017 Approved_Supplemental_Issues\Supp4Approved FEB_2018\Backup2\SN02C.dgn
06-MAR-2018

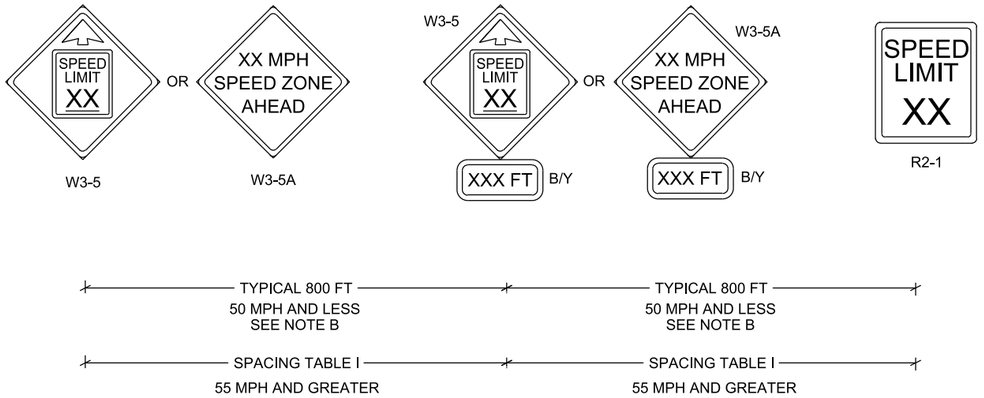


## SPEED REDUCTION OF 20 MPH OR 25 MPH THREE SIGN SEQUENCE

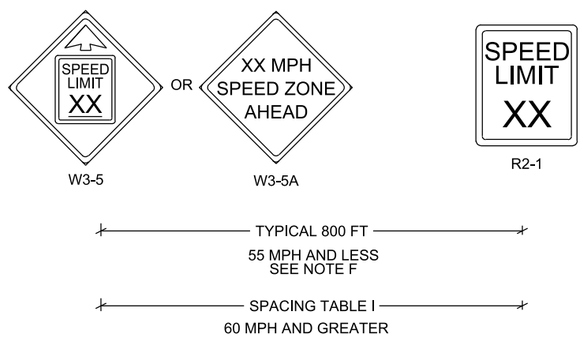


## SPEED REDUCTION OF 15 MPH TWO SIGN SEQUENCE

SEE NOTE C

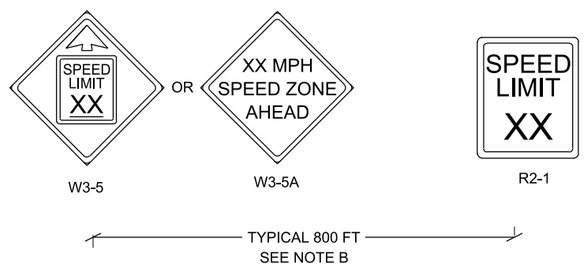


## SPEED REDUCTION OF 10 MPH OR LESS (OPTIONAL) TWO SIGN SEQUENCE

APPROACH SPEED (MPH)

| REDUCED SPEED (MPH) | 80 | 75 | 70 | 65 | 60 | 55 | 50 | 45 | 40 | 35 | 30 |
|---|---|---|---|---|---|---|---|---|---|---|---|
| 75 | 500 | | | | | | | | | | |
| 70 | 830 | 460 | | | | | | | | | |
| 65 | 1150 | 780 | 420 | | | | | | | | |
| 60 | 1440 | 1070 | 710 | 380 | | | | | | | |
| 55 | 1710 | 1330 | 980 | 650 | 340 | | | | | | |
| 50 | 1960 | 1580 | 1230 | 900 | 590 | 310 | | | | | |
| 45 | | 1800 | 1450 | 1120 | 810 | 530 | 270 | | | | |
| 40 | | | 1650 | 1320 | 1010 | 730 | 470 | 230 | | | |
| 35 | | | | 1490 | 1190 | 910 | 640 | 410 | 190 | | |
| 30 | | | | | 1340 | 1060 | 790 | 560 | 350 | 150 | |
| 25 | | | | | | 1180 | 920 | 690 | 470 | 280 | 120 |
| 20 | | | | | | | 1030 | 790 | 580 | 390 | 220 |
| 15 | | | | | | | | 870 | 660 | 470 | 300 |

## MINIMUM SIGN SPACING (FT)

TABLE 1

SEE NOTES E AND F

**DESIGN-ONLY NOTES:**

A. USE MINIMUM R2-1 SIGN SIZE OF 36 INCHES x 48 INCHES FOR CONVENTIONAL ROADS AND EXPRESSWAYS.

USE R2-1 SIGN SIZE OF 48 INCHES x 60 INCHES FOR FREEWAYS.

USE W3-5 (OR W3-5A) SIGN SIZE OF 48 INCHES x 48 INCHES FOR FREEWAYS AND EXPRESSWAYS.

USE W3-5 (OR W3-5A) SIGN SIZE OF 36 INCHES x 36 INCHES FOR CONVENTIONAL ROADS.

B. USE TABLE 1 FOR OPTIONAL SIGN SPACING UPON DIRECTION OF THE REGION TRAFFIC ENGINEER.

C. USE OF THREE SIGN SEQUENCE IS OPTIONAL FOR SPEED REDUCTION OF 15 MPH.

D. DO NOT MIX W3-5 WITH W3-5A SIGNS IN THE SAME SIGNING SEQUENCE.

E. STEP SPEED LIMIT DOWN IN INCREMENTS WHEN SPEED REDUCTION IS 30 MPH OR GREATER.

F. USE SINGLE SPEED REDUCTION OF 30 MPH UPON DIRECTION OF THE REGION TRAFFIC ENGINEER. USE THREE SIGN SEQUENCE AND MINIMUM SIGN SPACING TABLE 1.

DESIGN ONLY DRAWING | SUPPLEMENTAL DRAWING

REVISIONS

| NO. | DATE | APPR. | REMARKS |
|---|---|---|---|
| 1 | 2/22/18 | CGW | ADDED CLARIFICATION TO NOTE A |

UTAH DEPARTMENT OF TRANSPORTATION
STANDARD DRAWINGS FOR ROAD AND BRIDGE CONSTRUCTION
SALT LAKE CITY, UTAH

RECOMMENDED FOR APPROVAL — FEB. 22, 2018 DATE
CHAIRMAN STANDARDS COMMITTEE APPROVED — FEB. 22, 2018 DATE
DEPUTY DIRECTOR

SPEED REDUCTION SIGN SEQUENCE

STANDARD DRAWING TITLE

STD. DWG. NO.

SN 3

DGN File:L:\Standard_Drawings\Imperial\2017 Approved_Supplemental_Issues\Supp4Approved FEB.2018\Backup2\SN03.dgn
06-MAR-2018

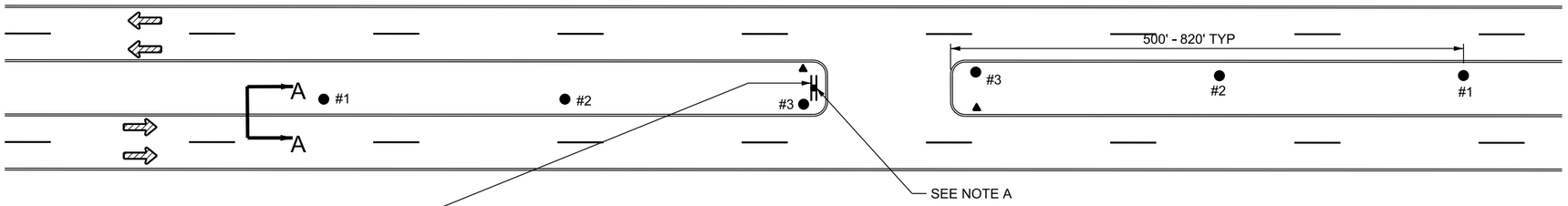


## FREEWAY CROSSOVER

**LEGEND**

- ● FREEWAY CROSSOVER MARKER
- ▲ TYPE 2 DELINEATOR

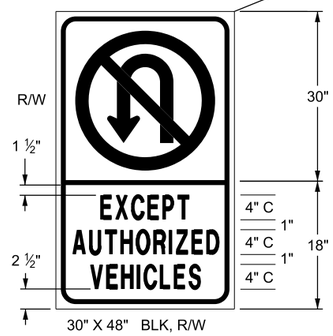


## RS5-11 NO U-TURN EXCEPT AUTHORIZED VEHICLES SIGN

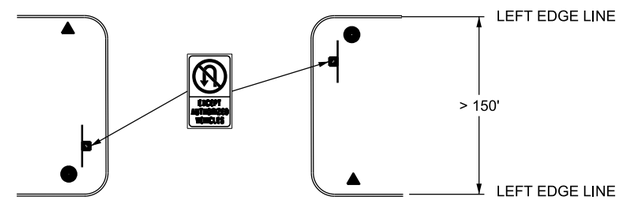


## FREEWAY CROSSOVER WITH MEDIAN GREATER THAN 150'

SEE NOTE A

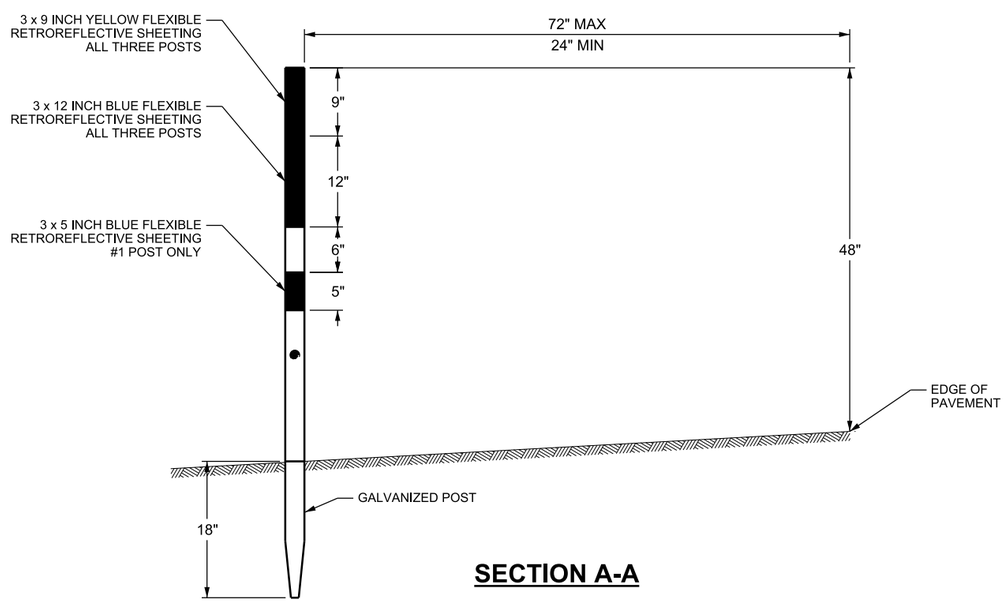


## SECTION A-A

**NOTES:**

1. USE EXISTING DELINEATOR SPACING WHEN POSSIBLE.
   POST #2 SPACED EVENLY BETWEEN POST #1 & #3.
   POST #3 PLACED 10 FT IN ADVANCE OF POINT OF TANGENCY.
2. SEE STANDARD SPECIFICATION 02890 FOR RETROREFLECTIVE SHEETING REQUIREMENTS.
3. SEE GW SERIES STD DWGS FOR POST DETAILS.

**DESIGN-ONLY NOTES:**

A. USE TWO RS5-11a SIGNS BACK-TO-BACK.

B. USE A RS5-11a SIGN AT EACH END OF CROSSING ADJACENT TO APPROACHING TRAFFIC WHERE THE LEFT EDGE LINES ARE SEPARATED BY MORE THAN 150 FT.

REVISIONS

| NO. | DATE | APPR. | REMARKS |
|---|---|---|---|
| 1 | 2/22/18 | CGW | CHANGED DELINEATOR POST RETROREFLECTIVE COLORS |

**UTAH DEPARTMENT OF TRANSPORTATION**
STANDARD DRAWINGS FOR ROAD AND BRIDGE CONSTRUCTION
SALT LAKE CITY, UTAH

RECOMMENDED FOR APPROVAL — FEB. 22, 2018 DATE
CHAIRMAN STANDARDS COMMITTEE APPROVED — FEB. 22, 2018 DATE
DEPUTY DIRECTOR

FREEWAY CROSSOVER SIGNING
STANDARD DRAWING TITLE

STD. DWG. NO.
SN 5

06-MAR-2018 DGN File:L:\Standard.Drawings\Imperial\2017 Approved_Supplemental.Issues\Supp4Approved FEB.2018\Backup2\SN05.dgn

**TRAFFIC PASS RIGHT**
**OM3-L**

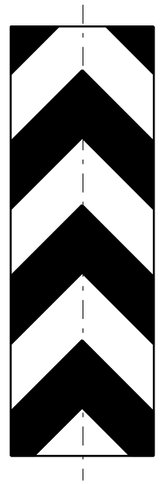

**TRAFFIC PASS EITHER SIDE**
**OM3-C**

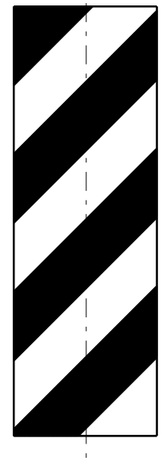

**TRAFFIC PASS LEFT**
**OM3-R**

**TYPE 3 OBJECT MARKERS**

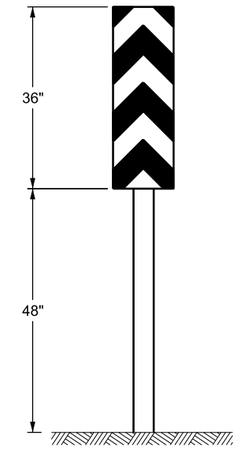


**OBJECT MARKERS**
**MOUNTING HEIGHT DETAIL**

OM3-C SHOWN (TYP)

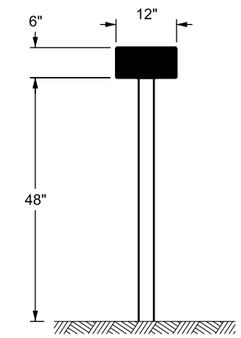


**OVERPASS MARKER**

(SEE NOTE F)
OM2-2H SHOWN (TYP)

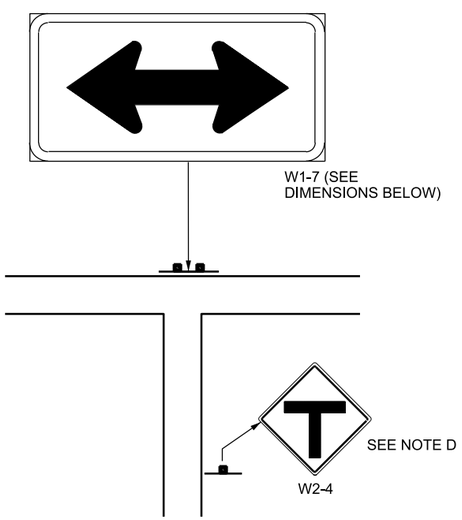


USE 96 INCH X 48 INCH FOR RURAL INTERSECTIONS
USE 72 INCH X 36 INCH FOR URBAN INTERSECTIONS
(SEE NOTE E FOR ADDITIONAL SIGN SIZING INFORMATION)

SEE STD DWG SN 14B FOR POST SPACING
SEE STD DWG SN 2A FOR SIGN MOUNTING HEIGHT

**'T' INTERSECTION SIGNING**

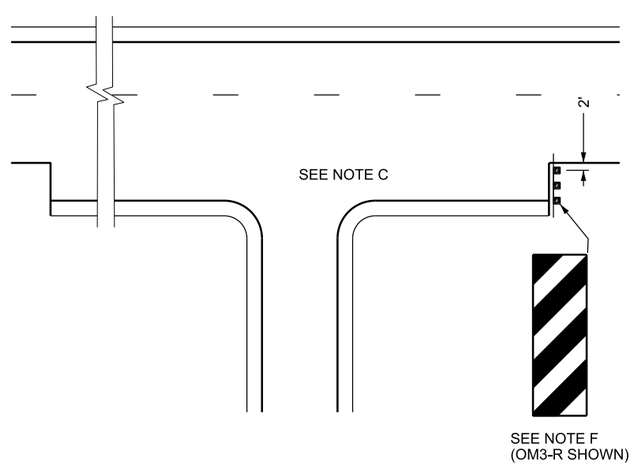


**PAVEMENT TRANSITION**

**DESIGN-ONLY NOTES:**

A. USE TYPE 3 OBJECT MARKERS TO MARK THE ENDS OF OBSTRUCTIONS WITHIN THE CLEAR ZONE. INSTALL THE MARKERS AS FOLLOWS:
- 5 FT OR LONGER OBSTRUCTION (IN THE DIRECTION OF TRAFFIC): ON EACH SIDE OF BOTH ENDS OF OBSTRUCTION ON TWO-WAY ROADWAYS, AND ON EACH SIDE OF THE APPROACH END ON ONE-WAY ROADWAYS FOR NARROW BRIDGES.
- LESS THAN 5 FT IN LENGTH OR LESS THAN 4 FT WIDE: BACK-TO-BACK ON ONE POST AT THE OBSTRUCTION
- 4-8 FT WIDE : MINIMUM OF 2 OBJECT MARKERS EVENLY SPACED
- WIDER THAN 8 FT: MIN OF 3 OBJECT MARKERS EVENLY SPACED

B. USE TYPE 3 OBJECT MARKER TO MARK THE APPROACH TO THE ENDS OF BARRIERS THAT DO NOT HAVE A CRASH CUSHION OR END TREATMENT INSTALLED.

C. SEE ST SERIES STD DWGS FOR PAVEMENT MARKINGS AND STRIPING OF PAVEMENT TRANSITION.

D. PLACE THE W2-4 SIGN IN ADVANCE OF AN UNCONTROLLED INTERSECTION IF THE W1-7 SIGN IS NOT USED. THE W2-4 SIGN MAY BE USED WHEN PLACING THE W1-7 SIGN. PLACE INTERSECTION WARNING SIGNS AN ADEQUATE DISTANCE FROM THE INTERSECTION TO ALLOW A PROPER RESPONSE. SEE THE UTAH MANUAL ON UNIFORM TRAFFIC CONTROL DEVICES TABLE 2C-4 FOR ADVISORY DISTANCES AND MORE INFORMATION.

E. ALTERNATE W1-7 SIGN DIMENSIONS (NOT LESS THAN THOSE SHOWN IN THE UTAH MANUAL ON UNIFORM TRAFFIC CONTROL DEVICES) MAY BE USED UPON APPROVAL OF THE REGION TRAFFIC ENGINEER. CONSIDER SIGHT DISTANCE, LIGHTING, TRAFFIC, AND ADJACENT PROPERTY OWNERS VISIBILITY AND SIGHT RESTRICTIONS WHEN DETERMINING ALTERNATE DIMENSIONS.

F. INSTALL OVERPASS MARKER 2 FT BEHIND PARAPET.

SUPPLEMENTAL DRAWING

REVISIONS

| NO. | DATE | APPR. | REMARKS |
|---|---|---|---|
| 1 | 2/22/18 | CGW | UPDATED NOTES A, B, AND D TO F. REVISED ALTERNATE OPTIONS FOR T-INTERSECTION SIGNING |

**UTAH DEPARTMENT OF TRANSPORTATION**
STANDARD DRAWINGS FOR ROAD AND BRIDGE CONSTRUCTION
SALT LAKE CITY, UTAH

RECOMMENDED FOR APPROVAL — FEB. 22, 2018 DATE
CHAIRMAN STANDARDS COMMITTEE APPROVED — FEB. 22, 2018 DATE
DEPUTY DIRECTOR

OBJECT MARKERS
"T" INTERSECTION AND
PAVEMENT TRANSITION
GUIDANCE

STANDARD DRAWING TITLE

STD. DWG. NO.
SN 6

DGN File: L:\Standard Drawings\Imperial\2017 Approved_Supplemental_Issues\Supp4Approved FEB_2018\Backup2\SN06.dgn
06-MAR-2018

## ATTACHMENT TO POST WITH Z-BAR AND U-BOLT
FOR SIGN PANEL 36 INCH WIDE

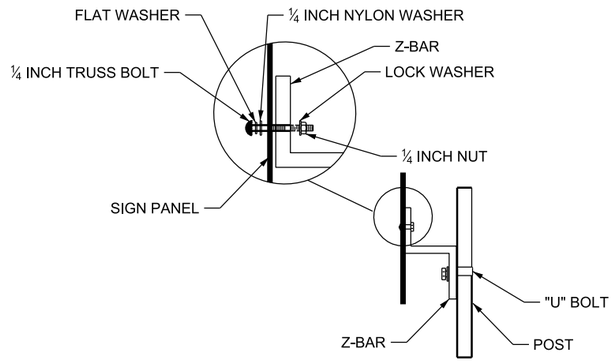


1. USE THIS INSTALLATION WHEN SIGN IS ON A SINGLE POST WITH MULTIPLE Z-BARS.
2. USE A LONG U-BOLT. REFER TO STD DWG SN 9B FOR U-BOLT REQUIREMENTS.
3. STAINLESS STEEL POP-RIVETS WITH WASHER MAY BE SUBSTITUTED FOR TRUSS BOLT.

## ATTACHMENT TO POST - SINGLE Z-BAR AND DOUBLE U-BOLT
FOR SIGN PANELS WITH 24 INCH HEIGHT OR LESS

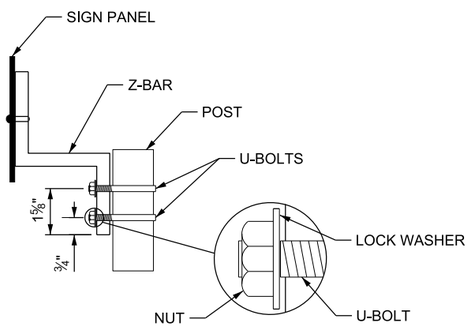


1. USE THIS INSTALLATION WHEN SIGN PANEL HAS ONLY ONE Z-BAR AND IS ATTACHED TO A SINGLE PANEL.
2. USE TWO LONG U-BOLTS. REFER TO STD DWG SN 9B FOR U-BOLT REQUIREMENTS.

## ATTACHMENT TO POST WITH Z-BAR AND CLAMP
FOR DOUBLE POST APPLICATIONS

Z-BAR AND SADDLE REQUIRED WHEN SIGN IS MOUNTED ON DOUBLE POSTS.

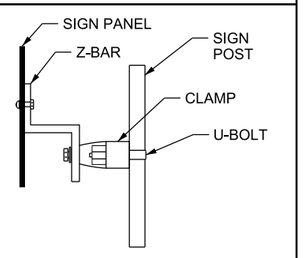


## ATTACHMENT TO POST WITH CLAMP
FOR SIGN PANEL 30 INCH WIDE OR LESS

1. USE WITH P3, P4, AND P5 POSTS ON A SINGLE POST. DO NOT USE WITH MULTIPLE POSTS.
2. REFER TO STD DWG SN 9B FOR CLAMP AND HARDWARE REQUIREMENTS.

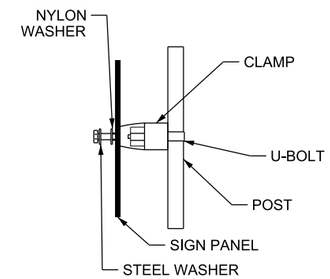


## SIGN PANEL TO POST DIRECT CONNECTION
FOR SIGN PANEL 30 INCH WIDE OR LESS WITH PREPUNCHED POST

### BOLT & WASHER REQUIREMENTS

1. USE WITH P1 AND P2 POSTS.
2. HARDWARE:
   - ⅜ x 3 INCH LONG BOLT
   - ⅜ INCH DIA HEX HEAD BOLT WITH NUT
   - ⅜ INCH DIA STEEL FLAT WASHER
   - ⅜ INCH DIA STEEL LOCK WASHER
   - ⅜ INCH DIA NYLON WASHER
3. GALVANIZE ALL STEEL COMPONENTS EXCEPT AS NOTED.

### ASSEMBLY

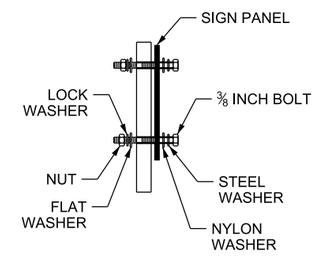


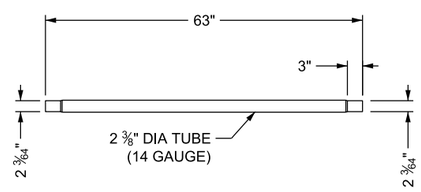


## EXTENSION
SEE NOTES 4 AND 7

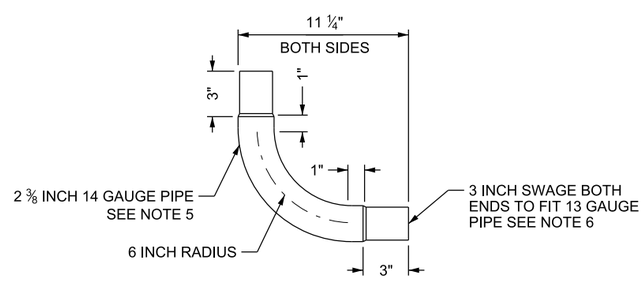


## 90 DEGREE POST EXTENSION
SEE NOTE 6

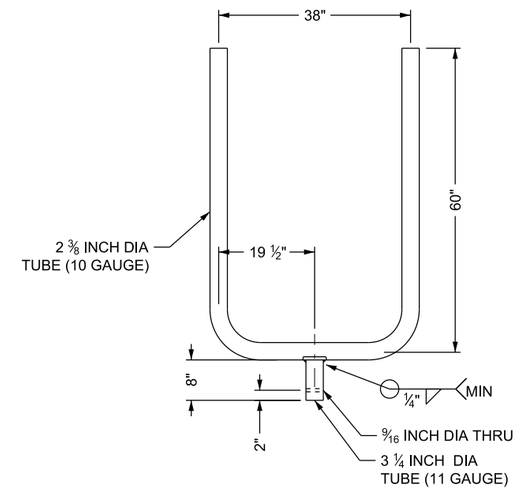


## "U" BRACKET
SEE NOTE 7

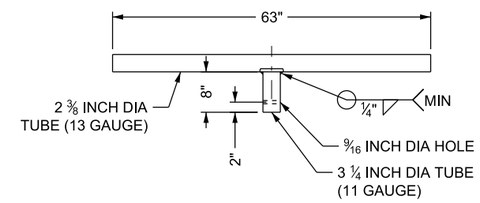


## "T" BRACKET
SEE NOTE 7

**NOTES:**

1. GALVANIZE PIPE TO MEET ASTM A 513.
2. COAT WELD JOINTS WITH ZINC RICH PAINT.
3. CUTTING OF "T" OR "U" BRACKET OR EXTENSION TO MEET REQUIRED LENGTH OR HEIGHT IS ACCEPTABLE. COAT CUT ENDS WITH ZINC RICH PAINT.
4. SWAGE ENDS OF EXTENSION TO PROVIDE A SNUG FIT IN A 2 ⅜ INCH DIA (10 BWG) TUBING.
5. 2 ⅜ INCH DIA 14 BWG TUBING PER ASTM A 787 AWG FABRICATED FROM GALVANIZED STEEL SHEET 0.083 INCH THICK, ASTM A 653 SS GRADE G90. REMETALIZE WELD SEAM USING ZINC WIRE ACCORDING TO ASTM B 833. TUBE OD WILL BE TREATED WITH CHROMATE CONVERSION SOLUTION AND PROTECTED WITH CLEAR ACRYLIC FILM.
6. BEND 90 DEGREES AND SWAGE 3 INCH ON BOTH ENDS. SWAGE TO BE 1 INCH FROM TANGENT POINT OF BEND RADIUS TO SHOULDER OF SWAGE. SWAGE TO FIT SNUG IN 13 GAUGE PIPE.
7. SWAGE 3 INCH ON BOTH ENDS. SWAGE TO FIT SNUG IN 13 GAUGE PIPE.

SUPPLEMENTAL DRAWING

REVISIONS

| NO. | DATE | APPR. | REMARKS |
|---|---|---|---|
| 1 | 2/22/18 | CGW | UPDATED REFERENCES AND NOTE 6, ADDED NOTE 7 |

**UTAH DEPARTMENT OF TRANSPORTATION**
STANDARD DRAWINGS FOR ROAD AND BRIDGE CONSTRUCTION
SALT LAKE CITY, UTAH

RECOMMENDED FOR APPROVAL — FEB. 22, 2018 DATE
CHAIRMAN STANDARDS COMMITTEE APPROVED — FEB. 22, 2018 DATE
DEPUTY DIRECTOR

TUBULAR STEEL SIGN MOUNTING REQUIREMENTS
STANDARD DRAWING TITLE

STD. DWG. NO.
SN 9A

DGN File:L:\Standard Drawings\Imperial\2017 Approved_Supplemental_Issues\Supp4Approved FEB_2018\Backup2\SN09A.dgn
06-MAR-2018

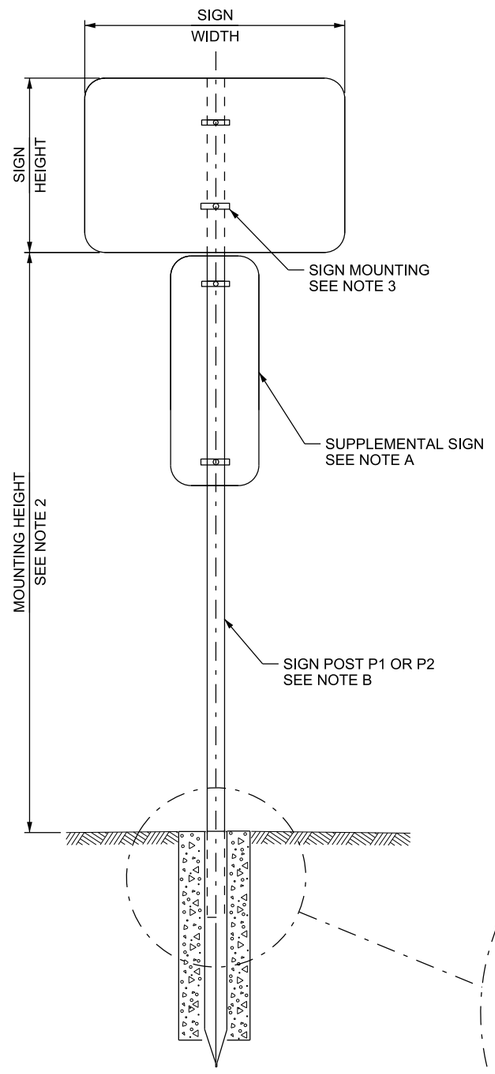


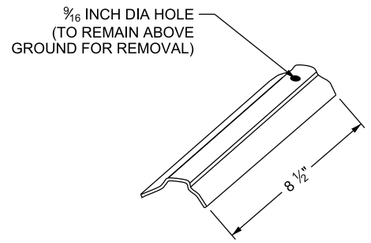


**WEDGE**

11 GA GALVANIZED
STEEL ASTM A 526 G-90

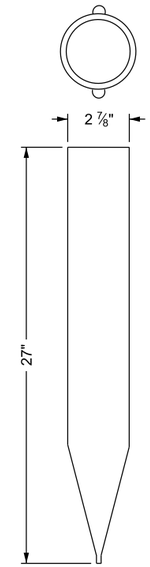


**TUBULAR SOCKET**

12 GA GALVANIZED
STEEL ASTM A 787

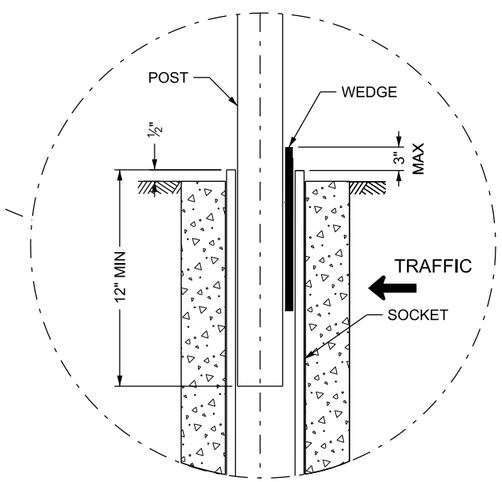


NOTE:
INSTALL WEDGE ON APPROACHING
TRAFFIC SIDE OF POST

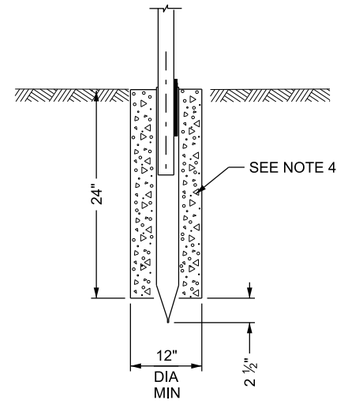


**CONCRETE FOUNDATION**

SEE NOTE 1

## SMALL SIGN TUBULAR STEEL POST BASE (B1)

(SOCKET SYSTEM)
(SINGLE POST APPLICATION ONLY)

| POST SELECTION GUIDE * | | | | |
|---|---|---|---|---|
| | SIGN WIDTH (FT.) | | | |
| SIGN HEIGHT(FT.) | 1 | 2 | 2.5 | 3 |
| 1 | P1 | P1 | P1 | P1 |
| 2 | P1 | P1 | P1 | P1 |
| 2.5 | P1 | P1 | P1 | P1 |
| 3 | P1 | P1 | P1 | P2 |
| 4 | P1 | P1 | P2 | P2 |

* POST SELECTION GUIDE ASSUMES A 7 FT MOUNTING HEIGHT FROM BOTTOM OF SIGN. INCREASE POST ONE SIZE FOR ADDITIONAL FOOT OF MOUNTING HEIGHT. MAXIMUM MOUNTING HEIGHT 8 FT. ANOTHER SIGN BASE OPTION IS REQUIRED IF MOUNTING HEIGHT REQUIREMENTS ARE GREATER.

POST SIZE DETERMINED BY BASE MANUFACTURER'S WIND LOADING REQUIREMENTS.

| POST DETAIL CHART (SINGLE POST ONLY) | | | |
|---|---|---|---|
| POST TYPE | OUTSIDE DIAMETER | WALL THICKNESS | MATERIAL AND COATING REQUIREMENTS |
| P1 ** | 2 3/8 INCH | 0.080 INCH (14 GAUGE) | ASTM A 513 GALVANIZED TO MEET AASHTO M 232 |
| P2 ** | 2 3/8 INCH | 0.095 INCH (13 GAUGE) | ASTM A 513 GALVANIZED TO MEET AASHTO M 232 |
| **DO NOT USE "T" OR "U" BRACKET ON P1 OR P2 POSTS. | | | |

**NOTES:**

1. CONCRETE FOUNDATION REQUIRED IN ALL INSTALLATIONS.
2. REFER TO SN 2 SERIES STD DWGS FOR MOUNTING HEIGHT AND OFFSET REQUIREMENTS.
3. REFER TO STD DWG SN 8 FOR SIGN MOUNTING REQUIREMENTS.
4. USE CONCRETE CLASS B(AE). PROJECT TOTALS REQUIRING ONE CUBIC YARD OR LESS A COMMERCIALLY AVAILABLE PRODUCT THAT MEETS OR EXCEEDS 4,000 PSI OR A CONCRETE MIX MEETING STANDARD SPECIFICATION 03055 CONCRETE CLASS B MAY BE USED. MIX BEFORE PLACING.
5. ALLOW FOR 7 DAY CURE TIME BEFORE INSTALLING SIGN POST.
6. PRE-PUNCH POST WITH 3/8 INCH HOLES, MOUNT SIGN DIRECTLY TO POST OR USE AN APPROVED MOUNTING CLAMP. SPACING OF HOLES FROM TOP IN INCHES ARE AS FOLLOWS:

   1,3,10, 16, 21, 23, 24, 27, 33, 37, 39, AND 45

**DESIGN-ONLY NOTES:**

A. DO NOT EXCEED MAXIMUM SQUARE FOOTAGE OF POST WHEN INSTALLING A SUPPLEMENTAL SIGN BY MORE THAN 25 PERCENT.
(EX: POST P2 MAX. SIGN SIZE 3 FT W x 4 FT H =12 SQ FT
+ 25 PERCENT=15 SQ.FT.= ( 3 FT W x 4 FT H)+ (1 FT W x 3 FT H )= 15 FT)

B. USE OF YELLOW POSTS FOR LEFT SIDE (MEDIAN) INSTALLATION OR FOR LOCATIONS WITH A HIGH PROBABILITY OF BEING IMPACTED IS PERMITTED WHEN DIRECTED BY REGION TRAFFIC ENGINEER.

REVISIONS

| NO. | DATE | APPR. | REMARKS |
|---|---|---|---|
| 1 | 2/22/18 | CGW | REVISED NOTE B FOR CONSISTENCY WITH OTHER DRAWINGS |

**UTAH DEPARTMENT OF TRANSPORTATION**
STANDARD DRAWINGS FOR ROAD AND BRIDGE CONSTRUCTION
SALT LAKE CITY, UTAH

RECOMMENDED FOR APPROVAL — FEB. 22, 2018 DATE
CHAIRMAN STANDARDS COMMITTEE APPROVED — FEB. 22, 2018 DATE
DEPUTY DIRECTOR

SMALL SIGN TUBULAR STEEL POST BASE WITH CONCRETE (B1) (SOCKET SYSTEM)
STANDARD DRAWING TITLE

STD. DWG. NO.
SN 11A

06-MAR-2018 DGN File:L:\Standard Drawings\Imperial\2017 Approved_Supplemental_Issues\Supp4Approved FEB_2018\Backup2\SN11A.dgn

| POST SELECTION SINGLE POST APPLICATION | | | | | | |
|---|---|---|---|---|---|---|
| | | SIGN WIDTH (FT.) | | | | |
| | | | 2 | 2.5 | 3 | 4 | 5 |
| SIGN HEIGHT(FT.) | 1 | | | | | P3 | P3 |
| | 2 | | | | | P3 | P3 |
| | 2.5 | | | | | P3 | P3 |
| | 3 | | | | P3 | P4 | P4 |
| | 4 | | | P3 | P4 | P4 | P5 |
| | 5 | | P3 | P3 | P4 | P4 | P5 |
| | 6 | | P3 | P3 | P4 | P5 | P5 |
| | 7 | | P3 | P3 | P4 | P5 | P5 |

"T" OR "U" BRACKET RECOMMENDED FOR SIGNS GREATER THAN 4 FEET WIDE

| POST SELECTION DOUBLE POST APPLICATION | | | | | | | |
|---|---|---|---|---|---|---|---|
| | | SIGN WIDTH (FT.) | | | | | |
| | | 5 | 6 | 7 | 8 | 9 | 10 |
| SIGN HEIGHT(FT.) | 2 | P3 | P3 | P3 | P3 | P3 | P3 |
| | 3 | P3 | P3 | P3 | P3 | P4 | P4 |
| | 4 | P3 | P3 | P4 | P4 | P4 | P4 |
| | 5 | P4 | P4 | P4 | P4 | P5 | P5 |
| | 6 | P4 | P4 | P5 | P5 | P5 | P5 |
| | 7 | P4 | P5 | P5 | P5 | P5 | |
| | 8 | P5 | P5 | P5 | P5 | | |

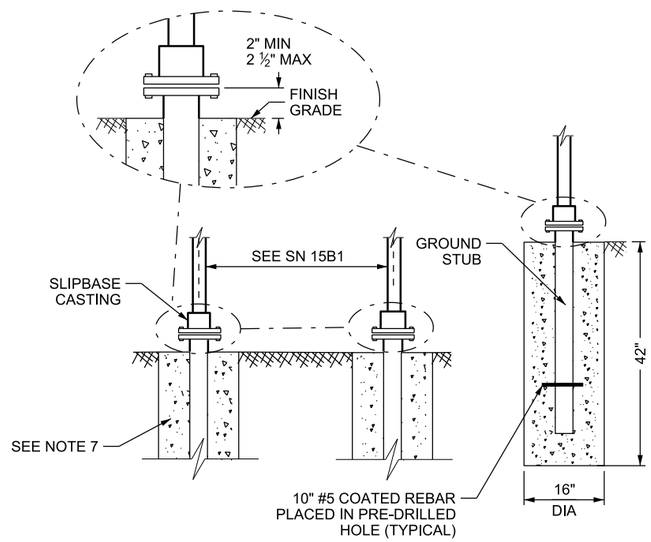


## SLIPBASE GROUND STUB FOUNDATION DETAIL

APPLIES TO SINGLE AND DOUBLE POST APPLICATIONS

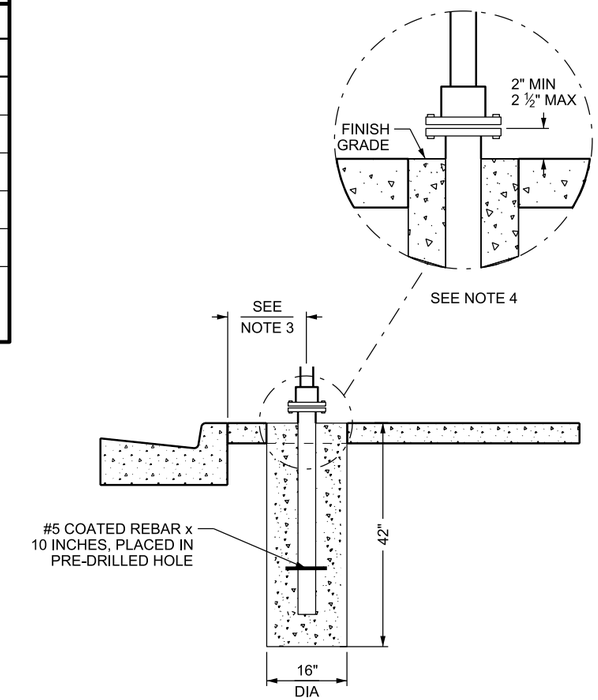


## SLIPBASE DETAIL FOR SIDEWALK

**NOTES:**

1. REFER TO STD DWG SN 12B FOR POST REQUIREMENTS.
2. REFER TO SN 9 SERIES STD DWGS FOR MOUNTING AND HARDWARE REQUIREMENTS.
3. REFER TO SN 2 SERIES STD DWGS FOR HEIGHT AND OFFSET REQUIREMENTS.
4. CORE DRILL SLIPBASE HOLE. INSTALL SLIPBASE AFTER PLACEMENT OF FINISHED GRADE.
5. PLACE TOP OF SLIPBASE STUB FLUSH WITH TOP OF THE ISLAND, WITH A TOLERANCE OF + ⅛ INCH, FOR ISLAND INSTALLATION (DO NOT PLACE BELOW TOP OF CURB).
6. USE THE LOWER VALUE WHEN THE SIGN WIDTH OR HEIGHT FALLS BETWEEN TWO VALUES, FOR POST AND SPACING REQUIREMENTS.
7. USE CONCRETE CLASS B(AE). PROJECT TOTALS REQUIRING ONE CUBIC YARD OR LESS A COMMERCIALLY AVAILABLE PRODUCT THAT MEETS OR EXCEEDS 4,000 PSI OR A CONCRETE MIX MEETING STANDARD SPECIFICATION 03055 CONCRETE CLASS B MAY BE USED. MIX BEFORE PLACING.
8. ALLOW FOR 7 DAY CURE TIME BEFORE INSTALLING SIGN POST. PRECAST SIGN FOUNDATION MAY BE USED.
9. SEE STD DWG SN 15F FOR BREAKAWAY SUPPORT STUB HEIGHT MEASUREMENT.

**DESIGN-ONLY NOTES:**

A. DO NOT EXCEED MAXIMUM SQUARE FOOTAGE OF SINGLE POST APPLICATION BY MORE THAN 25 PERCENT WHEN INSTALLING A SUPPLEMENTAL SIGN (EX: POST P5 - MAX. SIGN SIZE 5 FT Wx 7 FT H = 35 SQ FT + 25 PERCENT = 43¾ SQ FT > (5 FT W x 7 FT H ) + ( 3 FT W x 2.5 FT H ) = 42½ SQ FT ).

SUPPLEMENTAL DRAWING

REVISIONS

| NO. | DATE | APPR. | REMARKS |
|---|---|---|---|
| 1 | 2/22/18 | CGW | ADDED NOTE A AND POST SIZES TO SMALLER SIGNS IN TABLES, UPDATED SHEET TITLE |

**UTAH DEPARTMENT OF TRANSPORTATION**
STANDARD DRAWINGS FOR ROAD AND BRIDGE CONSTRUCTION
SALT LAKE CITY, UTAH

RECOMMENDED FOR APPROVAL — FEB. 22, 2018 DATE
CHAIRMAN STANDARDS SUBCOMMITTEE APPROVED — FEB. 22, 2018 DATE
DEPUTY DIRECTOR

SLIPBASE SIGN BASE (B3) INSTALLATION
STANDARD DRAWING TITLE

STD. DWG. NO.
SN 12A

06-MAR-2018 DGN File:L:\Standard_Drawings\Imperial\2017 Approved_Supplemental_Issues\Supp4Approved FEB.2018\Backup2\SN12A.dgn

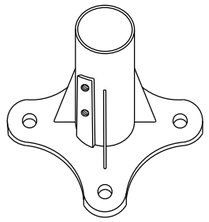

**BASE CASTING**

ASTM A 536 65-45-12
DUCTILE IRON
SEE NOTE A

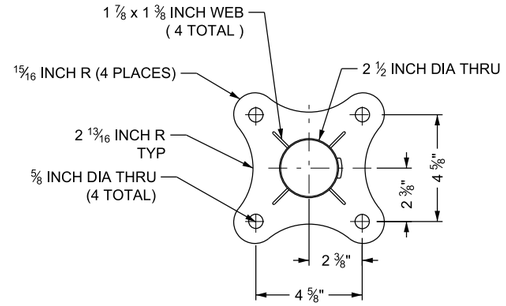


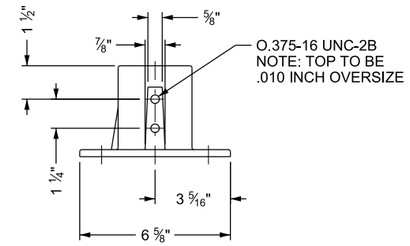


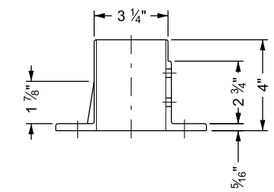


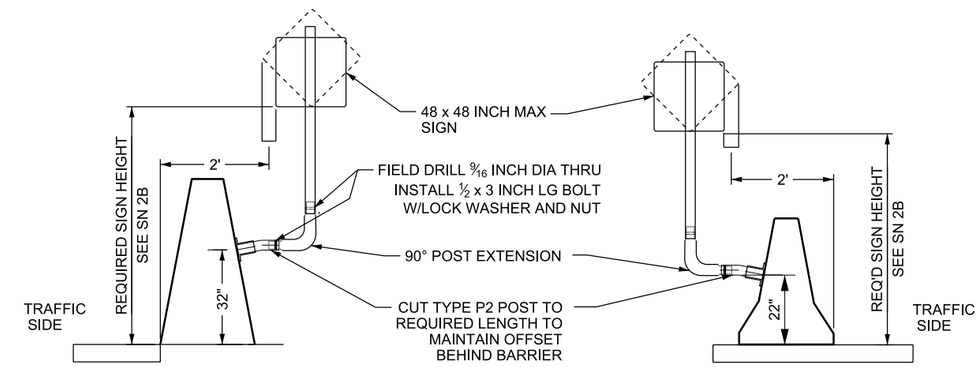


HORIZONTAL INSTALLATION NOTE: USE A 90 DEGREE POST EXTENSION WHEN MOUNTED HORIZONTALLY. REFER TO STD DWG SN 9A FOR POST EXTENSION REQUIREMENTS. FORM SIGN SUPPORT SYSTEM SO SIGN POST IS PLUMB.

**HORIZONTAL INSTALLATION**

MOUNTING HARDWARE:
4- EACH 1/2 x 4 INCH MECHANICAL WEDGE ANCHORS.
4- EACH 1/2 INCH FLAT WASHERS
4- EACH 1/2 INCH LOCK WASHERS
4- EACH 1/2 INCH NUTS
2- EACH BEVELED WASHERS. REQUIRED FOR HORIZONTAL MOUNTING ONLY.
ALL HARDWARE WILL BE GALVANIZED OR ZINC PLATED.

INSTALLATION REQUIREMENTS:
DRILL: 4 - 1/2 INCH HOLES 4 1/2 INCHES DEEP, CLEAN HOLE PRIOR TO INSTALLING ANCHORS

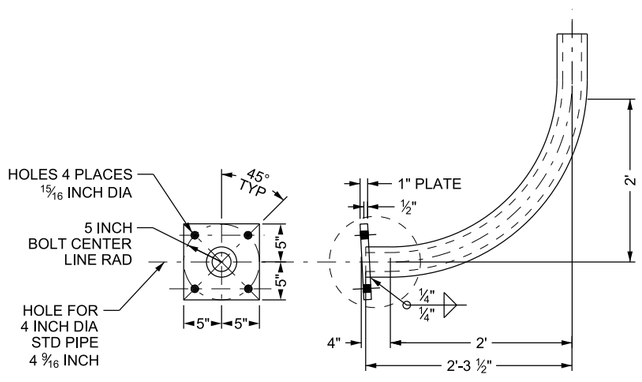


**SIDE MOUNTED BARRIER BASE**

**TUBULAR STEEL SIGN BASE SURFACE MOUNT (B4B) FOR 2 3/8 INCH DIAMETER POSTS (P1 OR P2 POSTS)**

**NOTES:**

1. USE P1 OR P2 POST. REFER TO STD DWG SN 11A.

**DESIGN-ONLY NOTES:**

A. USE BASE CASTING INSTALLATION ONLY ON ROADS WITH POSTED SPEED OF 45 MPH OR LOWER AND ONLY IN RETROFIT INSTALLATIONS AS DIRECTED BY THE REGION TRAFFIC ENGINEER.

SUPPLEMENTAL DRAWING

REVISIONS

| NO. | DATE | APPR. | REMARKS |
|---|---|---|---|
| 1 | 2/22/18 | CGW | RENUMBERED NOTES AND UPDATED NOTE A AND SIDE MOUNTED BARRIER DETAIL TITLE |

**UTAH DEPARTMENT OF TRANSPORTATION**
STANDARD DRAWINGS FOR ROAD AND BRIDGE CONSTRUCTION
SALT LAKE CITY, UTAH

RECOMMENDED FOR APPROVAL — FEB. 22, 2018 DATE
CHAIRMAN STANDARDS COMMITTEE APPROVED — FEB. 22, 2018 DATE
DEPUTY DIRECTOR

SIDE MOUNTED TUBULAR STEEL SIGN BASE (B4B)
STANDARD DRAWING TITLE

STD. DWG. NO.
SN 13

DGN File: L:\Standard Drawings\Imperial\2017 Approved_Supplemental Issues\Supp4Approved FEB.2018\Backup2\SN13.dgn
06-MAR-2018

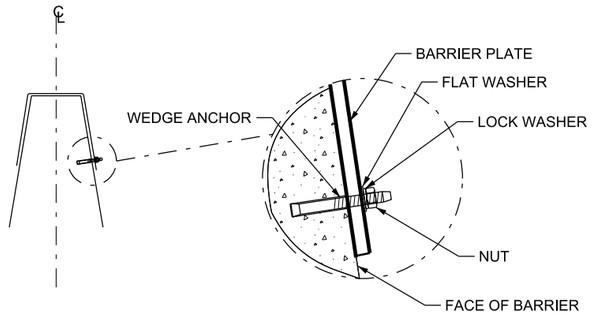


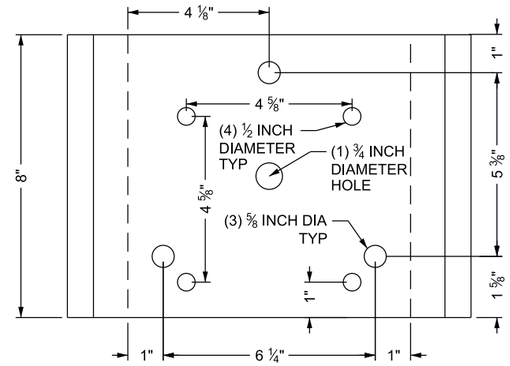


**TOP VIEW**

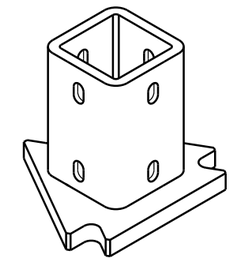

**BASE B7D**

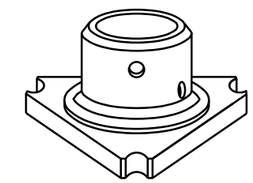

**BASE B3**

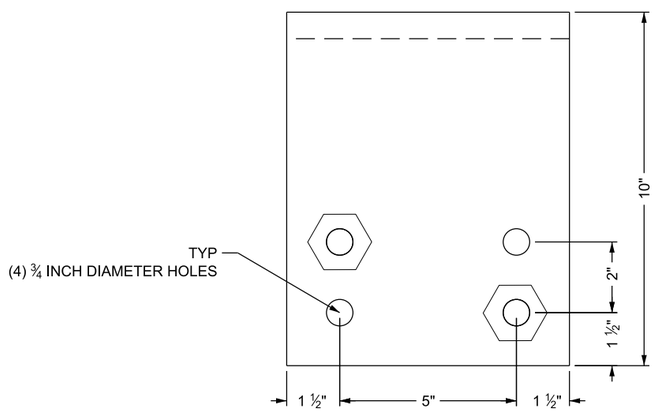


**SIDE VIEW**

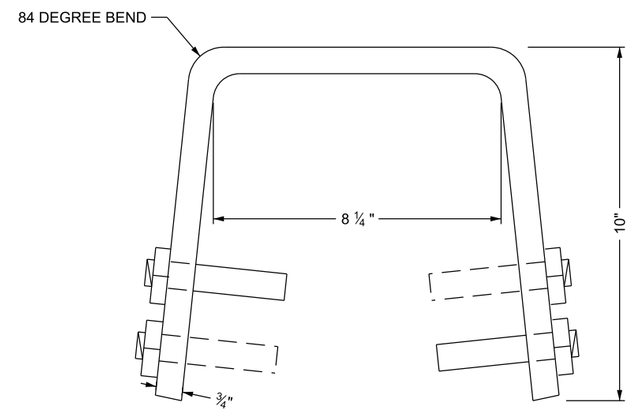


INSTALL 2 BOLTS EACH SIDE. STAGGER BOLTS SO EACH BOLT IS OPPOSITE AN EMPTY HOLE IN THE SADDLE BRACKET.

**END VIEW**

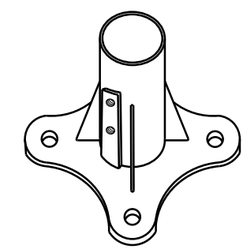

**BASE B4B**

**NOTES:**

1. REFER TO STD DWG SN 8 FOR SIGN MOUNTING AND HARDWARE REQUIREMENTS.
2. REFER TO STD DWG SN 2B SIGN MOUNTING HEIGHT AND SIGN WIDTH REQUIREMENT.
3. REFER TO STD DWG SN 12A. POST LENGTH DETERMINED BY SIGN SIZE.
4. USE HOLES TAPPED 0.010 OVERSIZED FOR HOT DIP GALVANIZING.
5. USE BASE PLATE:
   ¾ INCH ASTM A 36 STEEL BEND AS PER DETAIL
   MEET ASTM A 123 GALVANIZING AFTER FABRICATION IS COMPLETED.
6. REQUIRED HARDWARE PER SIGN BASE:
   4 - ¾ x 5 ½ INCH MECHANICAL WEDGE ANCHORS HOT DIP GALVANIZED
   4 - ¾ INCH FLAT WASHERS HOT DIP GALVANIZED
   4 - ¾ INCH LOCK WASHERS HOT DIP GALVANIZED
   4 - ¾ INCH NUTS, HOT DIP GALVANIZED
7. DRILL (4) - ¾ INCH DIA HOLES 5 INCH DEEP, CLEAN HOLE PRIOR TO INSTALLING ANCHORS.
8. EXPOSE NO MORE THAN ½ INCH OF THREAD BEYOND NUT AFTER NUT IS TIGHTENED. DO NOT FLAME CUT WEDGE ANCHORS.
9. USE WITH B3, B7D, AND B4B BASES.

**DESIGN-ONLY NOTES:**

A. USE FOR SIGNS 20 SQ FT OR LESS.

## 42-INCH CONSTANT SLOPE BARRIER PLATE TOP MOUNT DETAIL

MODIFIED SADDLE BRACKET

SUPPLEMENTAL DRAWING

REVISIONS

| NO. | DATE | APPR. | REMARKS |
|---|---|---|---|
| 1 | 2/22/18 | CGW | ADDED 42-INCH TO DETAIL TITLE |

**UTAH DEPARTMENT OF TRANSPORTATION**
STANDARD DRAWINGS FOR ROAD AND BRIDGE CONSTRUCTION
SALT LAKE CITY, UTAH

RECOMMENDED FOR APPROVAL — FEB. 22, 2018 DATE
CHAIRMAN, STANDARDS COMMITTEE APPROVED — FEB. 22, 2018 DATE
DEPUTY DIRECTOR

BARRIER MOUNTED TUBULAR STEEL SIGN BASES 20 SQ FT OR LESS
STANDARD DRAWING TITLE

STD. DWG. NO.
SN 14A

DGN File:L:\Standard_Drawings\Imperial\2017 Approved_Supplemental_Issues\Supp4Approved FEB.2018\Backup2\SN14A.dgn
06-MAR-2018

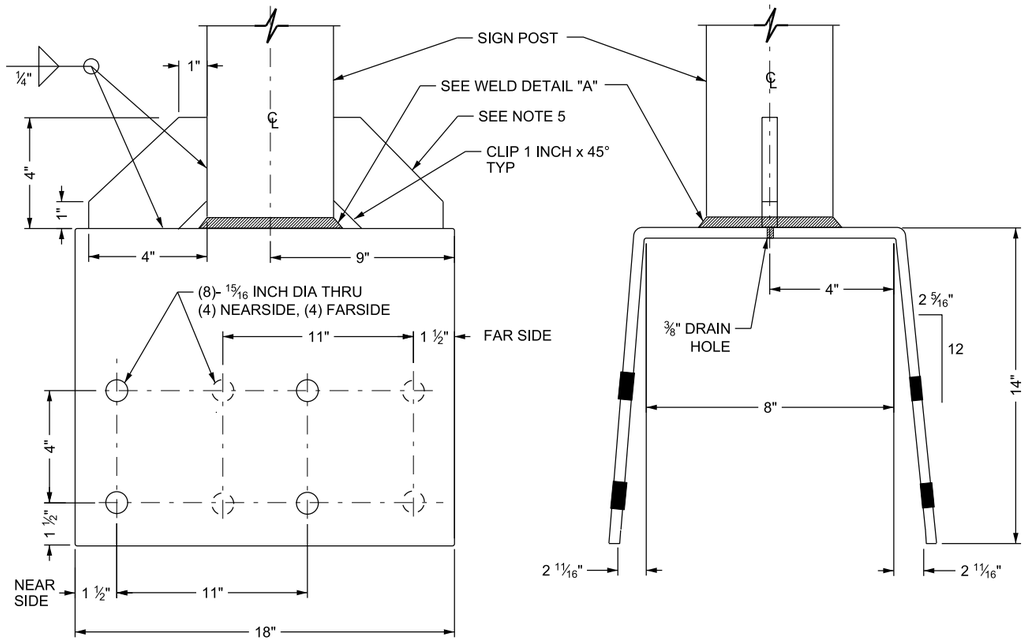


## 42-INCH CONSTANT SLOPE BARRIER PLATE DETAIL

## 42-INCH CONSTANT SLOPE BARRIER TOP MOUNT 4 INCH TUBULAR STEEL SIGN BASE (B5A)

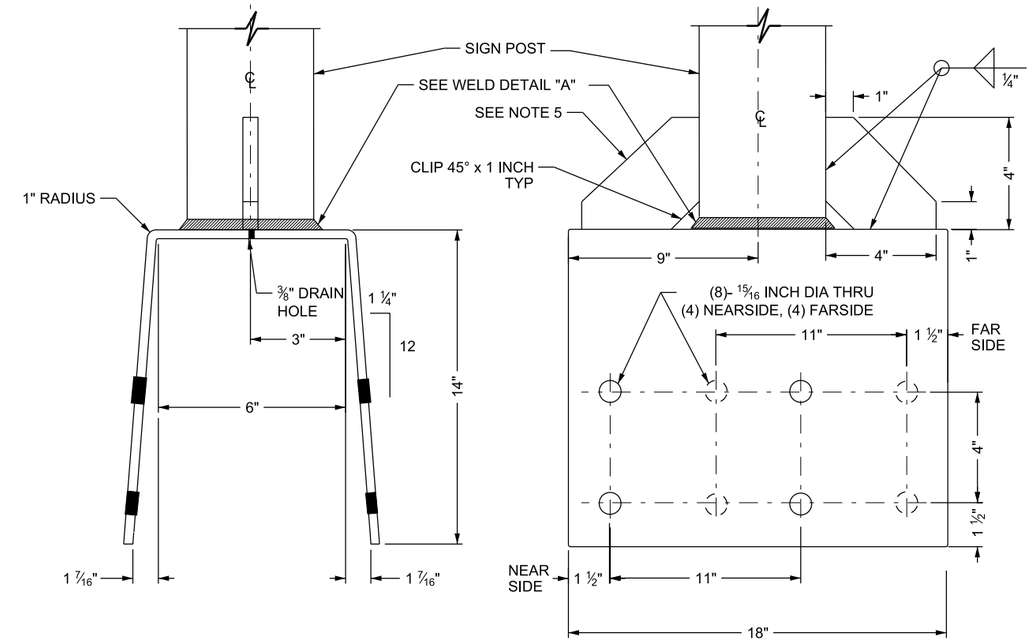


## JERSEY SHAPE BARRIER PLATE DETAIL

## JERSEY SHAPE BARRIER TOP MOUNT 4 INCH TUBULAR STEEL SIGN BASE(B5B)

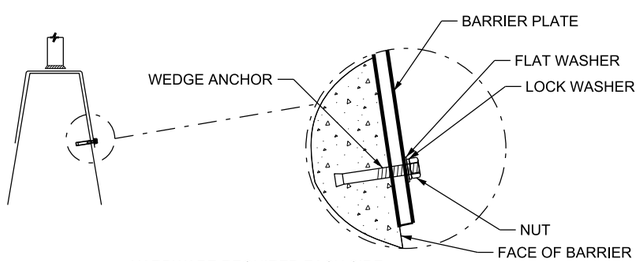


HARDWARE REQUIRED EACH SIDE:

4 - ¾ x 5 ½ INCH MECHANICAL WEDGE ANCHORS HOT DIPPED GALVANIZED

4 - ¾ INCH FLAT WASHERS HOT DIPPED GALVANIZED

4 - ¾ INCH LOCK WASHERS HOT DIPPED GALVANIZED

4 - ¾ INCH NUTS, HOT DIPPED GALVANIZED

INSTALLATION:

DRILL (4) - ¾ INCH DIA HOLES 5 INCH DEEP, CLEAN HOLE PRIOR TO INSTALLING ANCHORS

NO MORE THAN ½ INCH OF THREAD TO BE EXPOSED BEYOND NUT AFTER NUT IS TIGHTENED. DO NOT FLAME CUT WEDGE ANCHORS

## MOUNTING AND INSTALLATION FOR CONSTANT SLOPE AND STANDARD SECTION

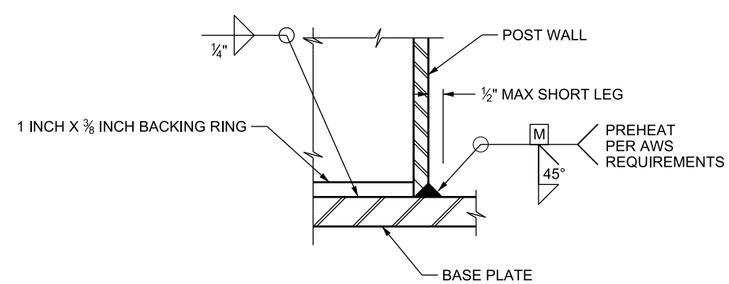


## WELD DETAIL "A"

**BARRIER PLATE FABRICATION REQUIREMENTS:**

BASE PLATE: ¾ INCH ASTM A 36 STEEL. BEND AS PER DETAIL
SIGN POST: 4 INCH NOMINAL SCHEDULE 80 MEETING ONE OF THE FOLLOWING ASTM GRADES: ASTM A 53 Gr B,
ASTM A 500 Gr B
ASTM API 5L Gr B / X42,
MEET ASTM A 123 GALVANIZING AFTER FABRICATION IS COMPLETED.

**GENERAL NOTES:**

1. REFER TO STD DWG SN 8 FOR SIGN MOUNTING AND HARDWARE REQUIREMENTS.
2. REFER TO STD DWG SN 2B FOR SIGN MOUNTING AND SIGN WIDTH REQUIREMENT.
3. POST LENGTH DETERMINED BY SIGN SIZE.
4. USE 36 SQ FT MAXIMUM SIGN PANEL AREA.
5. USE ½ INCH STIFFERNER PLATES FOR SIGN PANEL AREA GREATER THAN 27 SQ FT.
6. ALL WELDING TO COMPLY WITH AWS STD D1.1.
7. LEADING EDGE SHOULD BE FLUSH WITH BARRIER.

SUPPLEMENTAL DRAWING

REVISIONS

| NO. | DATE | APPR. | REMARKS |
|---|---|---|---|
| 1 | 2/22/18 | CGW | ADDED 42-INCH TO DETAIL TITLE |

**UTAH DEPARTMENT OF TRANSPORTATION**
STANDARD DRAWINGS FOR ROAD AND BRIDGE CONSTRUCTION
SALT LAKE CITY, UTAH

RECOMMENDED FOR APPROVAL — FEB. 22, 2018 DATE
CHAIRMAN STANDARDS COMMITTEE APPROVED — FEB. 22, 2018 DATE
DEPUTY DIRECTOR

BARRIER MOUNTED TUBULAR STEEL SIGN BASES (B5A AND B5B)
STANDARD DRAWING TITLE

STD. DWG. NO.
SN 14B

DGN File:L:\Standard Drawings\Imperial\2017 Approved_Supplemental_Issues\Supp4Approved FEB_2018\Backup2\SN14B.dgn
06-MAR-2018

## POST AND FOUNDATION TABLE

| SIGN HEIGHT, H | SIGN WIDTH, W — ONE POST | | | TWO POSTS | | | | | | | | | | | THREE POSTS | | FOUR POSTS | |
|---|---|---|---|---|---|---|---|---|---|---|---|---|---|---|---|---|---|---|
| | 3'-0" | 4'-0" | 5'-0" | 6'-0" | 7'-0" | 8'-0" | 9'-0" | 10'-0" | 11'-0" | 12'-0" | 13'-0" | 14'-0" | 15'-0" | 16'-0" | 17'-0" | 18'-0" TO 24'- 0" | 25'-0" | 26'-0" TO 32'-0" |
| 1'-0" | | | | S3 x 5.7<br>3'-9"/3'-6" | S3 x 5.7<br>3'-9"/3'-6" | S3 x 5.7<br>3'-9"/3'-6" | S3 x 5.7<br>3'-9"/3'-6" | S3 x 5.7<br>3'-9"/3'-6" | S3 x 5.7<br>3'-9"/3'-6" | S3 x 5.7<br>3'-9"/3'-9" | S3 x 5.7<br>3'-9"/3'-9" | S3 x 5.7<br>4'-0"/3'-9" | S3 x 5.7<br>4'-0"/3'-9" | S3 x 5.7<br>4'-0"/3'-9" | S3 x 5.7<br>4'-0"/4'-0" | S4 x 9.5<br>4'-0"/4'-0" | S3 x 5.7<br>4'-0"/4'-0" | S4 x 9.5<br>4'-0"/4'-0" |
| 1'- 6" | | | | S3 x 5.7<br>3'-9"/3'-6" | S3 x 5.7<br>3'-9"/3'-6" | S3 x 5.7<br>3'-9"/3'-9" | S3 x 5.7<br>4'-0"/3'-9" | S3 x 5.7<br>4'-0"/3'-9" | S3 x 5.7<br>4'-0"/3'-9" | S3 x 5.7<br>4'-0"/3'-9" | S4 x 9.5<br>4'-0"/3'-9" | S4 x 9.5<br>4'-0"/3'-9" | S4 x 9.5<br>4'-0"/3'-9" | S4 x 9.5<br>4'-0"/3'-9" | S4 x 9.5<br>4'-0"/4'-0" | S4 x 9.5<br>4'-3"/4'-0" | S4 x 9.5<br>4'-0"/4'-0" | S4 x 9.5<br>4'-3"/4'-0" |
| 2'- 0" | | | | S3 x 5.7<br>3'-9"/3'-9" | S3 x 5.7<br>4'-0"/3'-9" | S3 x 5.7<br>4'-0"/3'-9" | S4 x 9.5<br>4'-0"/3'-9" | S4 x 9.5<br>4'-0"/3'-9" | S4 x 9.5<br>4'-0"/3'-9" | S4 x 9.5<br>4'-0"/3'-9" | S4 x 9.5<br>4'-3"/3'-9" | S4 x 9.5<br>4'-3"/3'-9" | S4 x 9.5<br>4'-3"/4'-0" | S4 x 9.5<br>4'-3"/4'-0" | S4 x 9.5<br>4'-3"/4'-0" | S4 x 9.5<br>4'-3"/4'-0" | S4 x 9.5<br>4'-3"/4'-0" | S4 x 9.5<br>4'-3"/4'-0" |
| 2'- 6" | | | | S3 x 5.7<br>4'-0"/3'-9" | S4 x 9.5<br>4'-0"/3'-9" | S4 x 9.5<br>4'-0"/3'-9" | S4 x 9.5<br>4'-0"/3'-9" | S4 x 9.5<br>4'-3"/3'-9" | S4 x 9.5<br>4'-3"/3'-9" | S4 x 9.5<br>4'-3"/4'-0" | S4 x 9.5<br>4'-3"/4'-0" | S4 x 9.5<br>4'-3"/4'-0" | S4 x 9.5<br>4'-3"/4'-0" | S4 x 9.5<br>4'-6"/4'-0" | S4 x 9.5<br>4'-3"/4'-0" | S6 x 12.5<br>4'-6"/4'-0" | S4 x 9.5<br>4'-3"/4'-0" | S6 x 12.5<br>4'-6"/4'-0" |
| 3'- 0" | 3" Ø<br>4'-0"/4'-0" | 4" Ø<br>4'-0"/4'-0" | 4" Ø<br>4'-3"/4'-0" | S4 x 9.5<br>4'-0"/3'-9" | S4 x 9.5<br>4'-0"/3'-9" | S4 x 9.5<br>4'-3"/3'-9" | S4 x 9.5<br>4'-3"/3'-9" | S4 x 9.5<br>4'-3"/4'-0" | S4 x 9.5<br>4'-3"/4'-0" | S4 x 9.5<br>4'-3"/4'-0" | S4 x 9.5<br>4'-6"/4'-0" | S6 x 12.5<br>4'-6"/4'-0" | S6 x 12.5<br>4'-6"/4'-0" | S6 x 12.5<br>4'-6"/4'-0" | S6 x 12.5<br>4'-6"/4'-0" | S6 x 12.5<br>4'-6"/4'-0" | S6 x 12.5<br>4'-6"/4'-0" | S6 x 12.5<br>4'-6"/4'-3" |
| 4'- 0" | 4" Ø<br>4'-0"/4'-0" | 4" Ø<br>4'-3"/4'-0" | 5" Ø<br>4'-6"/4'-0" | S4 x 9.5<br>4'-3"/3'-9" | S4 x 9.5<br>4'- 3"/4'-0" | S4 x 9.5<br>4'-3"/4'-0" | S4 x 9.5<br>4'-3"/4'-0" | S6 x 12.5<br>4'-6"/4'-0" | S6 x 12.5<br>4'-6"/4'-0" | S6 x 12.5<br>4'-6"/4'-0" | S6 x 12.5<br>4'-6"/4'-3" | S6 x 12.5<br>4'-9"/4'-3" | S6 x 12.5<br>4'-9"/4'-3" | S6 x 12.5<br>4'-9"/4'-3" | S6 x 12.5<br>4'-9"/4'-3" | S6 x 12.5<br>4'-9"/4'-3" | S6 x 12.5<br>4'-9"/4'-3" | S6 x 12.5<br>4'-9"/4'-3" |
| 5'- 0" | 4" Ø<br>4'-3"/4'-0" | 5" Ø<br>4'-6"/4'-0" | 5" Ø<br>4'-6"/4'-3" | S4 x 9.5<br>4'-3"/4'-0" | S6 x 12.5<br>4'-6"/4'-0" | S6 x 12.5<br>4'-6"/4'-0" | S6 x 12.5<br>4'-6"/4'-0" | S6 x 12.5<br>4'-9"/4'-3" | S6 x 12.5<br>4'-9"/4'-3" | S6 x 12.5<br>4'-9"/4'-3" | S6 x 12.5<br>4'-9"/4'-3" | S6 x 12.5<br>5'-0"/4'-3" | S6 x 12.5<br>5'-0"/4'-6" | S6 x 12.5<br>5'-0"/4'-6" | S6 x 12.5<br>5'-0"/4'-6" | S6 x 12.5<br>5'-0"/4'-6" | S6 x 12.5<br>5'-0"/4'-6" | S6 x 12.5<br>5'-0"/4'-6" |
| 6'- 0" | 5" Ø<br>4'-6"/4'-0" | 5" Ø<br>4'-9"/4'-3" | 6" Ø<br>4'-9"/4'-3" | S4 x 9.5<br>4'-6"/4'-0" | S6 x 12.5<br>4'-6"/4'-0" | S6 x 12.5<br>4'-9"/4'-3" | S6 x 12.5<br>4'-9"/4'-3" | S6 x 12.5<br>4'-9"/4'-3" | S6 x 12.5<br>5'-0"/4'-3" | S6 x 12.5<br>5'-0"/4'-6" | S6 x 12.5<br>5'-0"/4'-6" | S6 x 17.25<br>5'-6"/4'-6" | S6 x 17.25<br>5'-6"/4'-6" | S8 x 18.4<br>5'-6"/4'-6" | S6 x 17.25<br>5'-6"/4'-6" | S8 x 18.4<br>5'-6"/4'-6" | S6 x 17.25<br>5'-6"/4'-6" | S8 x 18.4<br>5'-6"/4'-6" |
| 7'- 0" | 5" Ø<br>4'-9"/4'-0" | 6" Ø<br>5'-0"/4'-3" | 6" Ø<br>5'-0"/4'-6" | S6 x 12.5<br>4'-9"/4'-0" | S6 x 12.5<br>4'-9"/4'-3" | S6 x 12.5<br>4'-9"/4'-3" | S6 x 12.5<br>5'-0"/4'-3" | S6 x 12.5<br>5'-0"/4'-3" | S6 x 12.5<br>5'-6"/4'-6" | S6 x 17.25<br>5'-6"/4'-6" | S8 x 18.4<br>5'-6"/4'-6" | S8 x 18.4<br>5'-6"/4'-6" | S8 x 18.4<br>5'-6"/4'-9" | S8 x 18.4<br>5'-6"/4'-9" | S8 x 18.4<br>5'-6"/4'-9" | S8 x 18.4<br>5'-6"/4'-9" | S8 x 18.4<br>5'-6"/4'-9" | S8 x 18.4<br>5'-6"/4'-9" |
| 8'- 0" | 5" Ø<br>4'-9"/4'-3" | 6" Ø<br>5'-0"/4'-3" | 6" Ø<br>5'-6"/4'-6" | S6 x 12.5<br>4'-9"/4'-3" | S6 x 12.5<br>5'-0"/4'-3" | S6 x 12.5<br>5'-0"/4'-3" | S6 x 12.5<br>5'-6"/4'-6" | S6 x 17.25<br>5'-6"/4'-6" | S6 x 17.25<br>5'-6"/4'-6" | S8 x 18.4<br>5'-6"/4'-6" | S8 x 18.4<br>5'-6"/4'-9" | S8 x 18.4<br>6'-0"/4'-9" | S8 x 18.4<br>6'-0"/4'-9" | S8 x 18.4<br>6'-0"/4'-9" | S8 x 18.4<br>6'-0"/4'-9" | S8 x 18.4<br>6'-0"/4'-9" | S8 x 18.4<br>6'-0"/4'-9" | S8 x 18.4<br>6'-0"/4'-9" |
| 9'- 0" | 6" Ø<br>5'-0"/4'-3" | 6" Ø<br>5'-6"/4'-6" | 8" Ø<br>5'-6"/4'-6" | S6 x 12.5<br>5'-0"/4'-3" | S6 x 12.5<br>5'-0"/4'-3" | S6 x 12.5<br>5'-6"/4'-6" | S6 x 17.25<br>5'-6"/4'-6" | S8 x 18.4<br>5'-6"/4'-6" | S8 x 18.4<br>5'-6"/4'-9" | S8 x 18.4<br>6'-0"/4'-9" | S8 x 18.4<br>6'-0"/4'-9" | S8 x 18.4<br>6'-0"/4'-9" | S8 x 18.4<br>6'-0"/5'-0" | W10 x 19<br>6'-0"/5'-0" | S8 x 18.4<br>6'-0"/5'-0" | W10 x 19<br>6'-0"/5'-0" | S8 x 18.4<br>6'-0"/5'-0" | W10 x 19<br>6'-0"/5'-0" |
| 10'- 0" | 6" Ø<br>5'-6"/4'-3" | 8" Ø<br>5'-6"/4'-6" | 8" Ø<br>6'-0"/5'-0" | S6 x 12.5<br>5'-6"/4'-3" | S6 x 17.25<br>5'-6"/4'-6" | S6 x 17.25<br>5'-6"/4'-6" | S8 x 18.4<br>5'-6"/4'-6" | S8 x 18.4<br>6'-0"/4'-9" | S8 x 18.4<br>6'-0"/4'-9" | S8 x 18.4<br>6'-0"/4'-9" | S8 x 18.4<br>6'-0"/5'-0" | W10 x 19<br>6'-6"/5'-0" | W10 x 19<br>6'-6"/5'-0" | W10 x 19<br>6'-6"/5'-0" | W10 x 19<br>6'-6"/5'-0" | W10 x 19<br>6'-6"/5'-6" | W10 x 19<br>6'-6"/5'-0" | W10 x 19<br>6'-6"/5'-6" |
| 11'- 0" | | SEE NOTE 3 | | S6 x 17.25<br>5'-6"/4'-6" | S6 x 17.25<br>5'-6"/4'-6" | S8 x 18.4<br>6'-0"/4'-6" | S8 x 18.4<br>6'-0"/4'-9" | S8 x 18.4<br>6'-0"/4'-9" | S8 x 18.4<br>6'-0"/4'-9" | S8 x 18.4<br>6'-0"/5'-0" | W10 x 19<br>6'-6"/5'-0" | W10 x 19<br>6'-6"/5'-0" | W10 x 19<br>6'-6"/5'-6" | W10 x 22<br>6'-6"/5'-6" | W10 x 19<br>6'-6"/5'-6" | W10 x 22<br>7'-0"/5'-6" | W10 x 19<br>6'-6"/5'-6" | W10 x 22<br>7'-0"/5'-6" |
| 12'- 0" | | | | S6 x 17.25<br>5'-6"/4'-6" | S8 x 18.4<br>6'-0"/4'-6" | S8 x 18.4<br>6'-0"/4'-9" | S8 x 18.4<br>6'-0"/4'-9" | S8 x 18.4<br>6'-0"/4'-9" | W10 x 19<br>6'-6"/5'-0" | W10 x 19<br>6'-6"/5'-0" | W10 x 19<br>6'-6"/5'-0" | W10 x 19<br>6'-6"/5'-6" | W10 x 22<br>7'-0"/5'-6" | W10 x 22<br>7'-0"/5'-6" | W10 x 22<br>7'-0"/5'-6" | W10 x 22<br>7'-0"/5'-6" | W10 x 22<br>7'-0"/5'-6" | W10 x 22<br>7'-0"/5'-6" |
| 13'- 0" | | | | S8 x 18.4<br>6'-0"/4'-6" | S8 x 18.4<br>6'-0"/4'-9" | S8 x 18.4<br>6'-0"/4'-9" | S8 x 18.4<br>6'-6"/4'-9" | W10 x 19<br>6'-6"/5'-0" | W10 x 19<br>6'-6"/5'-0" | W10 x 19<br>6'-6"/5'-6" | W10 x 22<br>7'-0"/5'-6" | W10 x 22<br>7'-0"/5'-6" | W10 x 22<br>7'-0"/5'-6" | W10 x 26<br>7'-0"/5'-6" | W10 x 26<br>7'-0"/5'-6" | W10 x 26<br>7'-6"/5'-6" | W10 x 26<br>7'-0"/5'-6" | W10 x 26<br>7'-6"/5'-6" |
| 14'- 0" | | | | S8 x 18.4<br>6'-0"/4'-9" | S8 x 18.4<br>6'-0"/4'-9" | S8 x 18.4<br>6'-6"/4'-9" | W10 x 19<br>6'-6"/5'-0" | W10 x 19<br>6'-6"/5'-0" | W10 x 19<br>7'-0"/5'-6" | W10 x 22<br>7'-0"/5'-6" | W10 x 22<br>7'-0"/5'-6" | W10 x 22<br>7'-0"/5'-6" | W10 x 26<br>7'-6"/5'-6" | W10 x 26<br>7'-6"/6'-0" | W10 x 26<br>7'-6"/5'-6" | W10 x 30<br>7'-6"/6'-0" | W10 x 26<br>7'-6"/5'-6" | W10 x 30<br>7'-6"/6'-0" |
| 15'- 0" | | | | S8 x 18.4<br>6'-0"/4'-9" | S8 x 18.4<br>6'-6"/4'-9" | W10 x 19<br>6'-6"/5'-0" | W10 x 19<br>7'-0"/5'-0" | W10 x 22<br>7'-0"/5'-6" | W10 x 22<br>7'-0"/5'-6" | W10 x 22<br>7'-0"/5'-6" | W10 x 26<br>7'-6"/5'-6" | W10 x 26<br>7'-6"/5'-6" | W10 x 26<br>7'-6"/5'-6" | W10 x 30<br>7'-6"/6'-6" | W10 x 30<br>7'-6"/6'-0" | W10 x 30<br>8'-0"/6'-0" | W10 x 30<br>7'-6"/6'-0" | W10 x 30<br>8'-0"/6'-0" |
| 16'- 0" | | | | S8 x 18.4<br>6'-6"/5'-6" | W10 x 19<br>6'-6"/5'-6" | W10 x 19<br>7'-0"/6'-0" | W10 x 22<br>7'-0"/6'-0" | W10 x 22<br>7'-0"/6'-0" | W10 x 22<br>7'-6"/6'-0" | W10 x 26<br>7'-6"/6'-0" | W10 x 26<br>7'-6"/6'-0" | W10 x 30<br>7'-6"/6'-6" | W10 x 30<br>8'-0"/6'-6" | W10 x 30<br>8'-0"/6'-6" | W10 x 30<br>8'-0"/6'-6" | W10 x 39<br>8'-0"/6'-6" | W10 x 30<br>8'-0"/6'-6" | W10 x 39<br>8'-0"/6'-6" |
| 17'- 0" | | | | S8 x 18.4<br>6'-6"/5'-6" | W10 x 19<br>7'-0"/5'-6" | W10 x 19<br>7'-0"/6'-0" | W10 x 22<br>7'-0"/6'-0" | W10 x 22<br>7'-6"/6'-0" | W10 x 26<br>7'-6"/6'-0" | W10 x 26<br>7'-6"/6'-0" | W10 x 30<br>8'-0"/6'-6" | W10 x 30<br>8'-0"/6'-6" | W10 x 39<br>8'-0"/6'-6" | W10 x 39<br>8'-0"/6'-6" | W10 x 39<br>8'-0"/6'-6" | W10 x 39<br>8'-0"/6'-6" | W10 x 39<br>8'-0"/6'-6" | W10 x 39<br>8'-0"/6'-6" |
| 18'- 0" | | | | W10 x 19<br>7'-0"/5'-6" | W10 x 19<br>7'-0"/6'-0" | W10 x 22<br>7'-0"/6'-0" | W10 x 22<br>7'-6"/6'-0" | W10 x 26<br>7'-6"/6'-0" | W10 x 26<br>7'-6"/6'-0" | W10 x 30<br>8'-0"/6'-6" | W10 x 30<br>8'-0"/6'-6" | W10 x 39<br>8'-0"/6'-6" | W10 x 39<br>8'-6"/6'-6" | W10 x 39<br>8'-6"/6'-6" | W10 x 39<br>8'-6"/6'-6" | W10 x 39<br>8'-6"/6'-6" | W10 x 39<br>8'-6"/6'-6" | W10 x 39<br>8'-6"/6'-6" |
| 19'- 0" | | | | W10 x 19<br>7'-0"/5'-6" | W10 x 22<br>7'-0"/6'-0" | W10 x 22<br>7'-6"/6'-0" | W10 x 26<br>7'-6"/6'-0" | W10 x 26<br>8'-0"/6'-0" | W10 x 30<br>8'-0"/6'-6" | W10 x 39<br>8'-0"/6'-6" | W10 x 39<br>8'-6"/6'-6" | W10 x 39<br>8'-6"/6'-6" | W10 x 39<br>8'-6"/6'-6" | W10 x 45<br>8'-6"/7'-0" | W10 x 39<br>8'-6"/6'-6" | W10 x 45<br>8'-6"/7'-0" | W10 x 39<br>8'-6"/6'-6" | W10 x 45<br>8'-6"/7'-0" |
| 20'- 0" | | | | W10 x 19<br>7'-0"/6'-0" | W10 x 22<br>7'-6"/6'-0" | W10 x 26<br>7'-6"/6'-0" | W10 x 26<br>8'-0"/6'-0" | W10 x 30<br>8'-0"/6'-6" | W10 x 39<br>8'-0"/6'-6" | W10 x 39<br>8'-6"/6'-6" | W10 x 39<br>8'-6"/6'-6" | W10 x 39<br>8'-6"/6'-6" | W10 x 45<br>9'-0"/7'-0" | W10 x 45<br>9'-0"/7'-0" | W10 x 45<br>9'-0"/7'-0" | W10 x 45<br>9'-0"/7'-0" | W10 x 45<br>9'-0"/7'-0" | W10 x 45<br>9'-0"/7'-0" |
| 21'- 0" | | | | W10 x 22<br>7'-0"/6'-0" | W10 x 22<br>7'-6"/6'-0" | W10 x 26<br>8'-0"/6'-0" | W10 x 30<br>8'-0"/6'-6" | W10 x 39<br>8'-0"/6'-6" | W10 x 39<br>8'-6"/6'-6" | W10 x 39<br>8'-6"/6'-6" | W10 x 39<br>8'-6"/6'-6" | W10 x 45<br>9'-0"/7'-0" | W10 x 45<br>9'-0"/7'-0" | W10 x 49<br>9'-0"/7'-0" | W10 x 45<br>9'-0"/7'-0" | W10 x 49<br>9'-0"/7'-0" | W10 x 45<br>9'-0"/7'-0" | W10 x 49<br>9'-0"/7'-0" |
| 22'- 0" | | | | W10 x 22<br>7'-6"/6'-0" | W10 x 26<br>8'-0"/6'-0" | W10 x 30<br>8'-0"/6'-0" | W10 x 30<br>8'-0"/6'-6" | W10 x 39<br>8'-6"/6'-6" | W10 x 39<br>8'-6"/6'-6" | W10 x 39<br>9'-0"/7'-0" | W10 x 45<br>9'-0"/7'-0" | W10 x 45<br>9'-0"/7'-0" | W10 x 49<br>9'-6"/7'-0" | W10 x 49<br>9'-6"/7'-0" | W10 x 49<br>9'-6"/7'-0" | W10 x 49<br>9'-6"/7'-0" | W10 x 49<br>9'-6"/7'-0" | W10 x 49<br>9'-6"/7'-0" |

### TABLE KEY

TOP VALUE: PIPE DIAMETER (Ø) OR STRUCTURAL SHAPE

BOTTOM VALUE: MINIMUM FOUNDATION EMBEDMENT - SOFT OR LOOSE SOIL/MEDIUM SOIL

### SOIL CONDITIONS TABLE

| SOFT OR LOOSE SOIL | | MEDIUM SOIL | |
|---|---|---|---|
| COHESIVE | GRANULAR | COHESIVE | GRANULAR |
| MOIST UNIT WEIGHT = 110 PCF<br>COHESION (C) = 750 PSF<br>STRAIN FACTOR (E50) = 0.01<br>SOIL MODULUS (K) = 100 PCI | UNIT WEIGHT = 115 PCF<br>SHEAR STRENGTH = 30°<br>SOIL MODULUS (K) = 50 PCI | MOIST UNIT WEIGHT = 125 PCF<br>COHESION (C) = 1,500 PSF<br>STRAIN FACTOR (E50) = 0.007<br>SOIL MODULUS (K) = 500 PCI | UNIT WEIGHT = 125 PCF<br>SHEAR STRENGTH = 34°<br>SOIL MODULUS (K) = 90 PCI |

**NOTES:**

1. SEE STD DWG SN 15B1 FOR GENERAL NOTES.
2. USE THE HIGHER VALUES WHEN SIGN HEIGHT OR WIDTH FALLS BETWEEN TWO VALUES.
3. USE OF Z-BAR IS PERMITTED FOR SIGN APPLICATIONS WITHIN DASHED LINE AREA, SEE STD DWG SN 8. DO NOT USE Z-BAR FOR MULTIPANEL SIGN APPLICATIONS.
4. USE EMBEDMENT VALUES FOR SOFT OR LOOSE SOIL CONDITIONS UNLESS OTHERWISE SHOWN.

**DESIGN-ONLY NOTES:**

A. USE EMBEDMENTS FOR SOFT OR LOOSE SOIL CONDITIONS UNLESS GEOTECHNICAL ENGINEER RECOMMENDS THAT THE SITE MEETS OR EXCEEDS THE MEDIUM SOIL CONDITIONS.

SUPPLEMENTAL DRAWING

REVISIONS

| NO. | DATE | APPR. | REMARKS |
|---|---|---|---|
| 1 | 2/22/18 | CGW | ADDED MISSING NOTE 3 REFERENCE TO TABLE AND UPDATED NOTE 4 |

UTAH DEPARTMENT OF TRANSPORTATION
STANDARD DRAWINGS FOR ROAD AND BRIDGE CONSTRUCTION
SALT LAKE CITY, UTAH

RECOMMENDED FOR APPROVAL — FEB. 22, 2018 DATE
CHAIRMAN STANDARD COMMITTEE APPROVED — FEB. 22, 2018 DATE
DEPUTY DIRECTOR

FREEWAY SIGN
POST AND FOUNDATION
REQUIREMENTS

STANDARD DRAWING TITLE

STD. DWG. NO.
SN 15B2

DGN File: L:\Standard Drawings\Imperial\2017 Approved_Supplemental_Issues\Supp4Approved FEB_2018\Backup2\SN15B2.dgn
MAR-2018

# Supplemental Issue, June 28, 2018

## Supplemental Specifications

| | |
|---|---|
| 02768M | Pavement Marking Materials |
| 02821M | Chain Link Fencing and Gates |
| 02824 | Fence on Structure **(New Specification)** |
| 02861M | Precast Retaining Noise Walls |
| 03055 | Portland Cement Concrete |
| 03310M | Structural Concrete |
| 03341M | Partial-Depth Precast Concrete Deck Panels |
| 03412M | Prestressed Concrete |
| 05822M | Elastomeric Bearings |
| 05829M | Pourable Joint Seal |

## Supplemental Drawings

| | |
|---|---|
| AT 5 | Ramp Meter Details Signing and Detection |
| AT 20 | Electronic Toll Lanes Control Systems Cabinet Layout |
| AT 21 | Electronic Toll Lanes Control Systems ETC Gantry |
| FG 6 | Chain Link Fence |
| SW 3A | Precast Concrete Noise Wall (1 of 2) |
| SW 4A | Precast Concrete Retaining/Noise Wall (1 of 3) |
| SW 5 | Precast Pilaster Post |
| TC 4B2 | Temporary Portable Rumble Strips |
| TC 4B4 | Shoulder Work Zone Temporary Portable Rumble Strips Freeway/Divided Highway |
| TC 4D2 | Work Zone Specialty Signs |
| TC 7 | Median Crossover and 2-Lane, 2-Way Diversion |
| TC 9 | Work Zone Business Access Signing |

**Supplemental Specification**
**2017 Standard Specification Book**

**SECTION 02768M**

# PAVEMENT MARKING MATERIALS

(Warranty Specification)

**Delete Table 1 and replace with the following:**

| TYPE | ELEVATION (ft above mean sea level) | INSTALLATION METHOD | MIN. SERVICE LIFE |
|---|---|---|---|
| Longitudinal lines | 0 to 5499 | Hot inlay | 48 months |
| Longitudinal lines | 0 to 5499 | Grooved | 72 months |
| Longitudinal lines | 5500 or more | Grooved | 48 months |
| Legends and symbols | All | All | 24 months |

Table 1

**Supplemental Specification**
**2017 Standard Specification Book**

**SECTION 02821M**

# CHAIN LINK FENCING AND GATES

**Delete Article 2.2, Paragraph A, and replace with the following:**

A. Pipe Posts and Rails
   1. Schedule 40, hot-dip galvanized coated pipe.
      a. Refer to ASTM F 1043 IA and ASTM F 1083
   2. High Strength, galvanized coated pipe.
      a. Refer to ASTM F 1043 IC

**Delete Article 3.1, Paragraphs D, E, F and G and replace with the following**

D. Set posts in concrete bases.
   1. Place concrete at least 6 inches below each post.
   2. Construct at least 12 inch diameter bases for end posts, pull posts, corner posts, gate posts, and line posts.

**Supplemental Specification**
**2017 Standard Specification Book**

**SECTION 02824**

# FENCE ON STRUCTURE

**Add Section 02824**

## PART 1 GENERAL

### 1.1 SECTION INCLUDES

A. Chain link fencing installed on parapets, walls, curbs, and other structures.

B. Ornamental fencing installed on parapets, walls, and other structures.

### 1.2 RELATED SECTIONS Not Used

### 1.3 REFERENCES

A. AASHTO M 111: Zinc (Hot Dip Galvanized) Coatings on Iron and Steel Products

B. AASHTO M 270: Structural Steel for Bridges

C. ASTM A 36: Carbon Structural Steel

D. ASTM A 153: Zinc Coating (Hot-Dip) on Iron and Steel Hardware

E. ASTM A 307: Carbon Steel Bolts, Studs, and Threaded Rod 60,000 PSI Tensile Strength

F. ASTM A 392: Zinc-Coated Steel Chain Link Fence Fabric

G. ASTM A 491: Aluminum-Coated Steel Chain Link Fence Fabric

H. ASTM A 500: Cold Formed Welded and Seamless Carbon Steel Structural Tubing in Round and Shapes

I. ASTM A 563: Carbon and Alloy Steel Nuts

J. ASTM A 824: Metallic-Coated Steel Marcelled Tension Wire for Use With Chain Link Fence

K. ASTM A 1085: Cold-Formed Welded Carbon Steel Hollow Structural Sections (HSS)

L. ASTM B 117: Operating Salt Spray (Fog) Apparatus

M. ASTM D 523: Specular Gloss

N. ASTM D 714: Evaluating Degree of Blistering in Paints

O. ASTM D 1654: Evaluation of Painted or Coated Specimens Subjected to Corrosive Environments

P. ASTM D 2240: Rubber Property – Durometer Hardness

Q. ASTM D 2244: Calculation of Color Tolerances and Color Differences from Instrumentally Measured Color Coordinates

R. ASTM D 2794: Resistance of Organic Coatings to the Effects of Rapid Deformation (Impact)

S. ASTM D 3359: Rating Adhesion by Tape Test

T. ASTM D 7803: Preparation of Zinc (Hot-Dip Galvanized) Coated Iron and Steel Product and Hardware Surfaces for Powder Coating

U. ASTM F 436: Hardened Steel Washers Inch and Metric Dimensions

V. ASTM F 668: Polyvinyl Chloride (PVC), Polyolefin and Other Polymer-Coated Steel Chain Link Fence Fabric

W. ASTM F 844: Washers, Steel, Plain (Flat), Unhardened for General Use

X. ASTM F 1083: Pipe, Steel, Hot-Dipped Zinc-Coated (Galvanized) Welded, for Fence Structures

Y. ASTM F 1554: Anchor Bolts, Steel, 36, 55, and 105-ksi Yield Strength

Z. AWS D1.1 Structural Welding Code – Steel

## 1.4 DEFINITIONS Not Used

## 1.5 SUBMITTALS

A. Certified mill test report (MTR) for all structural steel.
   1. Seven calendar days before delivery to site, including materials manufactured outside of the United States.
   2. Clearly indicate country of origin on MTR.

B. Manufacturer's product data sheets and recommended installation instructions.

C. Material Safety Data Sheets.

# PART 2 PRODUCTS

## 2.1 GENERAL

A. Anchor Bolt Assembly
   1. Headed Anchor Bolt according to ASTM F 1554 Grade 55.
   2. Nuts according to ASTM A 563.
   3. Washers according to ASTM F 436.
   4. Galvanize according to ASTM A 153.

B. Fasteners
   1. Bolts according to ASTM A 307, Grade A.
   2. Nuts according to ASTM A 563.
   3. Washers according to ASTM F 844 or ASTM F 436.
   4. Carriage bolts
      a. Use ASTM A 307, Grade A.
   5. Galvanize according to ASTM A 153.

C. Neoprene Pad
   1. Use neoprene pad with a Shore A durometer of 50-60 according to ASTM D 2240.

D. Structural Steel
   1. Use structural steel conforming to AASHTO M 270 Grade 50 for plates.
   2. Use structural steel conforming to ASTM A 500, Grade B for hollow sections and steel pipe.
      a. Not including fence post, top rails, and horizontal braces.
   3. Use structural steel conforming to ASTM A 36 for angles, channels and bar.
   4. Weld according to AWS D1.1.
   5. Galvanize after fabrication according to AASHTO M 111.

## 2.2 CHAIN LINK FENCING

A. Fence Posts
   1. Use steel pipe conforming to ASTM F 1083 High Strength Grade, Schedule 40.

B. Top Rail and Horizontal Brace
   1. Use steel pipe conforming to ASTM F 1083 High Strength Grade, Schedule 40.

C. Expansion Rail
   1. Use steel pipe conforming to ASTM F 1083 Regular Strength Grade, Schedule 40.

D. Chain Link Fence Fabric
   1. Use 9 gauge wire.
   2. Openings in the fabric are not to exceed 2 inch in any direction.
   3. Use one piece fabric widths.
   4. Use knuckled selvage at bottom.
   5. Use twisted and barbed selvage at the top.
   6. Provide either Type I zinc-coated steel or Type II aluminum-coated steel fence fabric as specified in ASTM A 392 and ASTM A 491.

E. Tension Wire
   1. Use 7 gauge steel tension wire according to ASTM A 824.
      a. Use Type II coating.

F. Miscellaneous hardware, fittings and appurtenances
   1. Manufacture to industry standards, commercial quality and suitable to the purpose used.
   2. Galvanize after fabrication according to AASHTO M 111.

## 2.3 ORNAMENTAL FENCING

A. Fabrication
   1. Fabricate posts and pickets so that they are plumb after installation.
   2. Fabricate horizontal rails, so they are parallel to roadway profile after installation.
   3. Panels are permitted to be fabricated within 0.5 percent of plumb.

## 2.4 HANDRAIL

A. Use steel pipe conforming to ASTM A 500 Grade B/C or ASTM A 1085, Grade A.

B. Steel Plates
   1. Conforming to ASTM A 36.

C. U-Bolt
   1. Conforming to ASTM A 307.
   2. Galvanize according to ASTM A 153.

D. Remove all burrs, sharp edges and corners.

E. Galvanize after fabrication according to AASHTO M 111.

## 2.5 COATINGS

A. Paint exposed elements when shown.
   1. Apply polymer coating over galvanized surface on fence components including nuts, bolts, washers, fittings and appurtenances. Refer to ASTM F 668.
   2. Use a field applied liquid polymer coating approved by the fence manufacturer for elements that are not practical to apply polymer coating in factory,

B. Powder coat exposed elements when shown.
   1. Prepare surfaces to receive powder coating according to ASTM D 7803.
   2. Apply powder coat over galvanized surface on fence components including nuts, bolts, washers, fittings and appurtenances meeting the requirements in Table 1.
   3. Use a field applied liquid polymer coating for items not feasible to powder coat before installation.

| Table 1 – Powder Coating Requirements | | |
|---|---|---|
| **Quality Characteristics** | **ASTM Test Method** | **Performance Requirements** |
| Adhesion | D 3359 – Method B | 5B rating |
| Corrosion Resistance | B 117, D 714 and D 1654 | Corrosion resistance over 1,500 hours (scribed per D 1654; failure mode is accumulation of 1/8” coating loss from scribe or medium # 8 blisters) |
| Impact Resistance | D 2794 | Impact resistance over 60 inch lb (forward impact using 0.625” ball) |
| Color/Gloss | D 2244 and D 523 (60° Method) | Weathering resistance over 1,000 hours (failure mode is 60% loss of gloss or color variance of more than 2 delta-E color units) |

## PART 3 EXECUTION

### 3.1 DELIVERY, HANDLING, AND STORAGE

A. Check materials upon delivery to verify that no damage occurred during shipping.

B. Store materials in such a manner to provide proper ventilation and drainage and to protect against damage, weather, vandalism, and theft.

### 3.2 CHAIN LINK FENCE ON STRUCTURE

A. Install anchor assembly
   1. Cast anchor assembly in structural concrete as shown.
   2. Hold anchor bolts in correct location and plumb.
      a. Embedded material required to maintain anchor bolt position are to be epoxy coated or galvanized.

B Fence framework installation
   1. Install neoprene pad, base plate and post as shown.
      a. Verify post is plumb within a tolerance of $1^1/_2$ inch over 9 foot length.
      b. Snug tight anchor bolts and peen ends of bolt to prevent loosening.
   2. Install horizontal brace and truss rod in brace panels and at terminal posts as shown.

3. Install top rail through the post caps and form a continuous brace from end to end of each stretch of fence.
    a. Splice top rail using top rail sleeve.
    b. Secure to the terminal post by a brace band and rail end.
    c. Provide expansion couplers as recommended by the fence manufacturer.
4. Fit post with post caps and line post caps as applicable. Snugly fit fittings over posts.

C. Tension Wire
1. Stretch taut, independently and before the fabric, between the terminal posts and secure to the terminal post using a brace band.
2. Secure to each line post with a tie wire.

D. Install chain link fabric
1. Install the fabric on the side of the posts as shown.
2. Attach fabric to the terminal post by threading the stretcher bar through the fabric.
3. Secure the stretcher bar to the end post with tension bands and $^{5}/_{16}$ inch carriage bolts spaced no greater than 12 inch on center.
    a. Install with the head on the fabric side of the fence. Peen all bolts to prevent removal of the nut.
4. Stretch fabric taut and free of sag, except where shown.
    a. Leave slack in fabric by stretching taut and backing off 2 inch before securing fabric to post where fence crosses deck expansion joint.
5. Secure fabric to each post with tie wires spaced no greater than 12 inch.
6. Secure fabric to top rail and horizontal brace with tie wires spaced no greater than 18 inch.
7. Secure fabric to tension wire with hog rings spaced no greater than 18 inch.

E. Install handrail when shown.
1. Handrail to match the profile of the associated pedestrian facility.

F. Bend tie wires to prevent hazard to persons or apparel.

G. Touch up fence components with a liquid polymer touch up coating approved by the fence manufacturer.

## 3.3 ORNAMENTAL FENCE ON STRUCTURE

A. Install anchor assembly
   1. Cast anchor assembly in structural concrete as shown.
   2. Hold anchor bolts in correct location and plumb.
      a. Embedded material required to maintain anchor bolt position are to be epoxy coated or galvanized.

B Fence framework installation
   1. Install neoprene pad, base plate and post as shown.
      a. Verify post is plumb within a tolerance of $1^1/_2$ inch over 9 foot length.
      b. Snug tight anchor bolts and peen ends of bolt to prevent loosening.
   2. Connect fence panels to posts.

C. Touch up fence components with a liquid polymer touch up coating approved by the fence manufacturer.

END OF SECTION

**Supplemental Specification**
**2017 Standard Specification Book**

**SECTION 02861M**

# PRECAST RETAINING/NOISE WALLS

**Delete Paragraph 2.1 A and replace with the following:**

A. Concrete
   1. Precast Panels and Posts
      a. Concrete Class AAA(AE) according to Section 03055.
         1) 28-day minimum compressive strength of 5,000 psi.
         2) Self-Consolidating Concrete (SCC) may be used at the Contractor's option. Refer to Section 03056.
   2. Post Holes
      a. Concrete Class B. Refer to Section 03055.

**Supplemental Specification**
**2017 Standard Specification Book**

**SECTION 03055**

# PORTLAND CEMENT CONCRETE

**Delete Section 03055 in its entirety and replace with the following:**

## PART 1 GENERAL

### 1.1 SECTION INCLUDES

A. Portland Cement Concrete.

### 1.2 RELATED SECTIONS

A. Section 03390: Concrete Curing

### 1.3 REFERENCES

A. AASHTO M 6: Fine Aggregate for Hydraulic Cement Concrete

B. AASHTO M 80: Coarse Aggregate for Hydraulic Cement Concrete

C. AASHTO M 85: Portland Cement

D. AASHTO M 154: Air-Entraining Admixtures for Concrete

E. AASHTO M 157: Ready-Mixed Concrete

F. AASHTO M 194: Chemical Admixtures for Concrete

G. AASHTO M 295: Coal Fly Ash and Raw or Calcined Natural Pozzolan for Use in Concrete

H. AASHTO M 307: Silica Fume Used in Cementitious Mixtures

I. AASHTO T 160: Length Change of Hardened Hydraulic Cement Mortar and Concrete

J. AASHTO T 325: Estimating the Strength of Concrete in Transportation Construction by Maturity Tests

K. AASHTO T 358: Surface Resistivity Indication of Concrete's Ability to Resist Chloride Ion Penetration

L ASTM C 150: Portland Cement

M. ASTM C 595: Blended Hydraulic Cements

N. ASTM C 1157: Hydraulic Cement

O. ASTM C 1567: Determining the Potential Alkali-Silica Reactivity of Combinations of Cementitious Materials and Aggregate (Accelerated Mortar-Bar Method)

P. ASTM C 1602: Mixing Water Used in the Production of Hydraulic Cement Concrete

Q. American Concrete Institute (ACI) Manual of Concrete Practice

R. UDOT Materials Manual of Instruction

S. UDOT Minimum Sampling and Testing Requirements

T. UDOT Quality Management Plan

U. AASHTO T 121: Density (Unit Weight), Yield, and Air Content (Gravimetric) of Concrete

V. ASTM C 1116: Fiber-Reinforced Concrete

W. ASTM C 1609: Flexural Performance of Fiber-Reinforced Concrete (Using Beam With Third-Point Loading)

X. ICC Evaluation Service (ICC-ES) AC32: Concrete with Synthetic Fibers

## 1.4 DEFINITIONS

A. Cold Weather Protection Period: The required time during which the concrete is maintained at or above a specific temperature to prevent freezing of the concrete and to provide the necessary strength development for structural safety.

B. Fibrillated Microfiber – Fibrillated synthetic fibers with diameters or equivalent diameters less than 0.012 inch.

C. Macrosynthetic Fiber – Synthetic fibers with diameters or equivalent diameters greater than 0.012 inch.

## 1.5 SUBMITTALS

A. Mix design for all AAA, AA, and A concrete classes to be used for approval.
   1. The Department approves concrete mix designs based on trial batch test results or on Department project history.
   2. Include at least the following:
      a. The proposed mix design.
      b. Target slump value.
      c. Trial batch test results.
      d. Test results verifying that coarse and fine aggregates meet this Section, Article 2.2, paragraph B.
      e. Test results for the proposed mix design for potential reactivity of coarse and fine aggregates according to UDOT Quality Management Plan 506: Ready-Mix Concrete.
      f. Test results demonstrating the ability of the combinations of cementitious materials and aggregates to control the reactivity when using potentially reactive aggregates in a mix design.
      g. Written plan for admixtures. Refer to this Section, Article 2.2, paragraph D.
      h. Well-graded combined aggregate gradation for the mix design when used.
         1) Provide targets for each required sieve (listed in Tables 5 and 6) for control and acceptance.
         2) Submit the coarseness factor, 0.45 power chart, percentage retained (8-18 gradation chart) or a combination of methodologies.
         3) Identify the aggregate size and number of component stockpiles.
         4) Provide gradations for each component stockpile and the target percentages of each stockpile used to achieve the total combined gradation.
      i. Test results establishing a density (unit weight) target of freshly mixed concrete according to AASHTO T 121 when using Class AA(LSF) and AA(ES) concrete.

B. Mix design, manufacturer's product data, or manufacturer's labeling for Class B concrete for approval.

C. Cold Weather Concreting Plan and Hot Weather Concreting Plan for review.

1. Include the following:
    a. Detailed procedures for the placement, protection, curing, and temperature monitoring of concrete during cold and hot weather.
    b. Procedures to be implemented upon abrupt changes in weather conditions or equipment failures.
    c. Refer to this Section, Article 3.1, paragraph D for cold weather concreting requirements and Article 3.1, paragraph E for hot weather concreting requirements.
2. Allow the Engineer 10 calendar days to review the plans.
    a. The Engineer may grant an increase in contract time when this review and approval time is exceeded.
    b. This review period applies each time the plans are submitted.
3. Do not begin cold weather concreting before the Cold Weather Concreting Plan is approved.
4. Do not begin hot weather concreting before the Hot Weather Concreting Plan is approved.
5. Not required for precast concrete members provided by prequalified suppliers. Refer to this Section, Article 3.1, subparagraph D1 for cold weather. Refer to this Section, Article 3.1 paragraph E3 for hot weather.

## 1.6 ACCEPTANCE

A. Acceptance for strength, air entrainment, and slump is according to UDOT Minimum Sampling and Testing Requirements.
    1. The following exceptions apply when using Class AA(LSF) and AA(ES) concrete mixes:
        a. Slump tests are suspended.
        b. Test fresh concrete density (unit weight) according to AASHTO T 121 at the same frequency as Air Content and Concrete Temperature.
            1) Batch fails if the unit weight of the fresh concrete in the field varies more than ± 5 $lb/ft^3$ from the target density for fresh concrete established by the mix design.
        c. Reject batch if water/cementitious ratio exceeds the water/cementitious ratio established in the trial batch.

B. The Department may accept the item at a reduced price when concrete is below specified strength and does not have a separate strength pay factor.
    1. The pay factor will be applied to the quantity of the pay item that is represented by the strength tests that fall below a specified strength.

2. Department will calculate the pay factor using Table 1 based on 28 day compressive strength.

Table 1

| Price Reduction for 28 Day Compressive Strength | | |
|---|---|---|
| **AAA(AE), AA(LSF), AA(LS), AA(ES), AA(P) Concrete Classes** | | **AA(AE), A(AE) Concrete Classes** |
| **PSI below Specified Strength** | **Pay Factor** | **Pay Factor** |
| 1-100 | 0.95 | 1.0 |
| 101-200 | 0.90 | 0.95 |
| 201-300 | 0.85 | 0.85 |
| 301-400 | 0.80 | 0.80 |
| More than 400 | Reject | Reject |

3. The Engineer may accept a “reject” lot based on an engineering analysis. The Department applies a 0.50 pay factor if a reject lot is allowed to remain in-place.

## PART 2 PRODUCTS

### 2.1 CONCRETE CLASSES AND MIX REQUIREMENTS

A. Use only concrete mixes that have a Department approved mix design.
   1. Refer to the requirements in Table 2.

Table 2

| Concrete Classes and Mix Requirements | | | | | | | |
|---|---|---|---|---|---|---|---|
| **Class** | **Coarse Aggregate Size** | **Maximum Water / Cementi-tious Ratio** | **Maximum Percent Shrinkage at 28 days AASHTO T 160** | **Chloride Ion Penetration AASHTO T 358 Table 1** | **Air Content Percent (%) *** | **Mix Design Compressive Strength *f* 'cr (psi)** | **28 Day Minimum Compressive Strength *f* 'c (psi) ** ** |
| AAA(AE) | 1" to No. 4<br>¾" to No. 4 | 0.40 | N/A | N/A | 5.0 - 7.5 | 6,200<br>or f'c +1200 | 5,000 or as shown |
| AA(LSF) | 1" to No. 4<br>¾" to No. 4 | 0.42 | 0.035 | Low to Negligible | 5.0 - 7.5 | 5,200 | 4,000 |
| AA(LS) | 1" to No. 4<br>¾" to No. 4 | 0.40 | 0.035 | Low to Negligible | 5.0 - 7.5 | 5,200 | 4,000 |
| AA(P) | 2" to No. 4<br>1½" to No. 4<br>1" to No. 4 | 0.44 | 0.042 | N/A | 4.0 - 7.0<br>4.5 - 7.5<br>5.0 - 7.5 | 5,200 | 4,000 |
| AA(ES)*** | 1½" to No. 4<br>1" to No. 4<br>¾" to No. 4 | 0.42 | 0.035 | Low to Negligible | 4.5 - 7.5<br>5.0 - 7.5<br>5.0 - 7.5 | 5,200 | 4,000 |
| AA(AE) | 2" to No. 4<br>1½" to No. 4<br>1" to No. 4<br>¾" to No. 4 | 0.44 | N/A | N/A | 4.0 - 7.0<br>4.5 - 7.5<br>5.0 - 7.5<br>5.0 - 7.5 | 5,200 | 4,000 |
| A | 1½" to No. 4<br>1" to No. 4<br>¾" to No. 4 | 0.53<br>0.53<br>0.48 | N/A | N/A | N/A | 3,900 | 3,000 |
| A(AE) | 1½" to No. 4<br>1" to No. 4<br>¾" to No. 4 | 0.53<br>0.53<br>0.48 | N/A | N/A | 4.5 - 7.5 | 3,900 | 3,000 |
| B or B(AE) | | 0.62 | N/A | N/A | N/A<br>3.0 - 6.0 | 3,250 | 2,500 |

Table 2 Notes:

* Values listed represent in-place air content. Make necessary adjustments for impacts to air content due to placement.

** For *f* 'c over 4,000 psi, design and proportion mixes according to ACI Manual of Concrete Practice 301: Specifications for Concrete and project specific criteria. Use air content percent in Table 2 for these mixes according to the class specified and the coarse aggregate size.

*** For Class AA(ES), achieve at least 3,000 psi at 24 hr.

Acronym Definitions:

AE = air-entrained
LSF = low shrinkage with fiber
LS = low shrinkage
P = pavement
ES = early strength

B. Maximum nominal size of coarse aggregate:
   1. Not larger than $^{1}/_{5}$ the narrowest dimension between sides of forms.
   2. Not larger than ⅓ the depth of slabs.
   3. Not larger than ¾ the minimum clear distance between reinforcing bars or between bars and forms, whichever is less.

C. Do not exceed water/cementitious ratio.
   1. Calculate the water/cementitious ratio (w/c) by weight according to the following formula:

$$\frac{w}{c} = \frac{Water}{Cement + Pozzolan}$$

D. Do not exceed 30 percent total pozzolan in any mix unless approved or otherwise specified.

E. Use 94 lb additional cementitious material per cubic yard to the amounts determined in the mix design for concrete deposited in water.

F. Slump tolerance
   1. Establish the target slump by mix design trial batch.
   2. The target slump tolerance is the acceptable variation from the maximum target slump.
   3. Do not exceed a 9 inch slump.

Table 3

| **Target Slump Tolerance (inch)** | | |
|---|---|---|
| | Target Slump | |
| | 3 inch or less | More than 3 inch |
| Plus tolerance | 0 | 0 |
| Minus tolerance | 1 ½ inch | 2 ½ inch |

G. Class AA(LSF) and AA(ES) concrete mixes require the following in addition to the requirements in Table 2:
   1. Synthetic Fiber Reinforcement according to this Section, paragraph 2.2F.
      a. Provide fibrillated microfibers and macrosynthetic fibers
   2. A well-graded combined aggregate gradation according to this Section, paragraph 2.2 B3.

## 2.2 MATERIALS

A. Cement

1. Use Type II Portland Cement or equivalent according to Table 4 unless otherwise specified. Type III Portland Cement or equivalent may be used for precast items.
2. Blended Hydraulic Cement
   a. Blended hydraulic cement substituted for Portland Cement:
      1) Use ASTM C 1567 to verify that expansion is less than 0.1 percent 14 days after the zero reading.
      2) Refer to the equivalent cements listed in Table 4.
   b. Do not exceed 30 percent total pozzolan limit when adding fly ash to a blended hydraulic cement.
      1) Submit documentation of the total pozzolan content with the mix design.

Table 4

| **Portland Cement/Blended Hydraulic Cement Equivalencies** | | |
|---|---|---|
| **AASHTO M 85**<br>Equivalent Alkalies<br>0.80 max percent | **ASTM C 595** | **ASTM C 1157** |
| *Type I | IP, IL, IT | GU |
| Type II | IP(MS), IT(MS) | MS |
| Type III | - | HE |
| *Type V | IP(HS), IT(HS) | HS |

*Use only when specified

3. Do not mix cements originating from different sources.
4. Do not use air-entrained cement.

B. Aggregate

1. Coarse Aggregate
   a. Use coarse aggregate that meets AASHTO M 80 physical properties. Use one of the gradations in Table 5.
   b. Do not exceed percentages of deleterious substances as specified in AASHTO M 80, Table 2, for Class A aggregates.

Table 5

| Coarse Aggregate Gradations - Percent Passing (by weight) | | | | | | | | | |
|---|---|---|---|---|---|---|---|---|---|
| **Aggregate Size (inches or sieve size)** | **2½** | **2** | **1½** | **1** | **¾** | **½** | **⅜** | **No. 4** | **No. 200** |
| 2 to No. 4 | 100 | 95-100 | | 35-70 | | 10-30 | | 0-5 | 0-1 |
| 1½ to No. 4 | | 100 | 95-100 | | 35-70 | | 10-30 | 0-5 | 0-1 |
| 1 to No. 4 | | | 100 | 95-100 | | 25-60 | | 0-10 | 0-1 |
| ¾ to No. 4 | | | | 100 | 90-100 | | 20-55 | 0-10 | 0-1 |

2. Fine Aggregate
   a. Use fine aggregate that meets AASHTO M 6 physical properties. Use the gradation in Table 6.

   b. Do not exceed percentages of deleterious substances as specified in AASHTO M 6, Table 2, for class A aggregates, using option “b” for material finer than the No. 200 sieve.

Table 6

| Fine Aggregate Gradation | |
|---|---|
| **Sieve Size** | **Percent Passing (by weight)** |
| ⅜ inch | 100 |
| No. 4 | 95 to 100 |
| No. 16 | 45 to 80 |
| No. 50 | 10 to 30 |
| No. 100 | 2 to 10 |
| No. 200 | 0 to 3.0 |

3. A well-graded combined aggregate gradation may replace the gradation requirements in Tables 5 and 6.
   a. Proportion combined aggregates using any combination of the 0.45 power chart, the 8-18 percent-retained and the Coarseness Factor charts in the UDOT Materials Manual of Instruction, Section 975: Guidelines for Well-Graded Combined Aggregate Gradations.
      1) Determine a combined gradation for the mix design. Provide targets for each sieve size (3/4”, ½”, 3/8”, #4, #8, #16, #30, #50, #100)
      2) Provide a combined gradation within the tolerances of Table 7 and with less than 3 percent passing the #200 sieve.
      3) Maintain gradations within zone II of the coarseness factor chart.

Table 7

| Tolerances for a Well Graded Combined Aggregate Gradation | |
|---|---|
| **Sieve Size** | **Percent Passing Allowable Tolerance** |
| ¾ “, ½”, 3/8” | ± 10% |
| #4, #8 | ± 5% |
| #16, #30, #50 | ± 4% |
| #100 | ± 3% |

C. Water
   1. Use potable water or water that meets ASTM C 1602, including Table 2.

D. Admixtures
   1. Do not use calcium chloride.
   2. Air Entrainment according to AASHTO M 154, including Section 5.
   3. Water Reducing Agents
      a. Refer to AASHTO M 194.
      b. High Range Water Reducer (HRWR) – Submit a written plan for approval with the trial batch that details ingredients, production methods, handling, and placing.
   4. Accelerators – Refer to AASHTO M 194.
   5. Set Retarding and Hydration Stabilizing Admixtures – Refer to AASHTO M 194.
      a. Establish and inform the Engineer of the effective life of the set-retarding or stabilizing admixture by trial batch if admixtures are required due to haul times exceeding the time limitations in this Section, Article 3.1, paragraph A.
      b. Do not exceed manufacturer’s recommendations for the use of the set retarding admixture.
      c. Do not re-dose the concrete with additional set retarding admixture.
      d. Add admixture at the batch plant at the time of initial batching operations.
      e. Show on batch tickets the amount of admixture used.
      f. Time of placement is established by the trial batch and supersedes the requirements in this Section, Article 3.1, paragraph A.
   6. Site-added air-entrainment – Refer to AASHTO M 154.
      a. Limit the use of site-added air-entraining agents to one addition per load, regardless of quantity.
      b. Use pre-measured admixtures.
      c. Record amount used on batch ticket.

d. Rotate the drum at least 30 revolutions at the mixing speed recommended by the manufacturer.

E. Pozzolan
1. Fly Ash
a. Class F according to AASHTO M 295 except Table 2.
1) Loss on Ignition (LOI) Not to exceed 3 percent.
2) Allowable CaO content Not to exceed 15 percent.
3) Label the storage silo for fly ash to distinguish it from cement.
4) Use different size unloading hoses and fittings for cement and fly ash.
2. Natural Pozzolan (Class N)
a. Refer to AASHTO M 295.
b. May use instead of fly ash provided that the expansion does not exceed 0.1 percent. Refer to ASTM C 1567.
3. Silica Fume
a. Refer to AASHTO M 307.

F. Synthetic Fiber Reinforcement
1. Fibrillated microfiber
a. Use fibrillated polypropylene fibers at 2 lb/yd$^3$ of concrete mix.
2. Macrosynthetic fiber
a. Use 4 lb/yd$^3$ of concrete mix.
b. Provide a minimum flexural strength ratio ($R_{e,3}$) of 25 percent when tested according to ASTM C 1609.
3. Store the fibers in a dry, covered area, free of contamination.
4. Evaluate trial batches to verify workability of the concrete.
5. Conform to ASTM C 1116, Type III and the requirements of ICC-ES AC32 Section 3.1.1 (plastic shrinkage reinforcement) and Section 3.1.2 (shrinkage and temperature reinforcement).
6. Do not introduce fibers at the same time as the cement is being introduced.
7. Mix for at least five minutes after the addition of the fibers.

## 2.3 MIX DESIGN

A. Design mixes to meet the requirements of this Section and project specific criteria.

B. The Contractor assumes responsibility for the compatibility of admixtures with the mix design and their potential effects on concrete properties.

C. Design the cementitious system to mitigate potential alkali-aggregate reactivity.
   1. Use at least 20 percent pozzolan by weight of the total cementitious system.

D. Obtain approval from the Engineer for the project specific application of an approved mix design.

## 2.4 TRIAL BATCHES

A. Use the same components in the trial batches that will be used in the project.
   1. Accelerators and site-added air-entrainment can be incorporated in the trial batch but are not required.

B. Use Department certified TTQP Concrete and Concrete Strength Testing personnel to perform trial batches and strength tests.

C. The Department or its certified representative may witness the trial batch.

D. Mix concrete trial batches according to the UDOT Materials Manual of Instruction 974: Guidelines for Portland Cement Concrete Mix Design Trail Batches.

E. Use a Department qualified laboratory to verify trial batch compressive and flexural strength testing.

## 2.5 AGGREGATE STOCKPILES

A. Construct stockpile platforms so that subgrades are prevented from intruding into aggregates.

B. Build stockpiles at least two days before use.

C. Provide an operator and front-end loader to help the Engineer take aggregate samples.

D. Provide separate stockpiles for coarse and fine aggregates.

E. Construct stockpiles to minimize segregation of aggregates

F. Allow washed aggregates to drain to uniform moisture content before use (12 hours minimum).

## 2.6 BATCH MATERIALS

A. Batch Tolerances. Refer to AASHTO M 157.
   1. Cementitious Material : ± 1 percent of the required mass
   2. Aggregate: ± 2 percent of the required mass
   3. Total Water: ± 3 percent of the required mix amount

B. Truck-Mixed Concrete (Dry-Batch)
   1. Do not load trucks in excess of their rated mixing capacity, 63 percent of the drum gross volume, or less than 2 $yd^3$.
   2. The truck rating plate must be readable.

# PART 3 EXECUTION

## 3.1 LIMITATIONS

A. Timing – Deliver, place, and consolidate concrete as follows unless otherwise specified:
   1. Within 90 minutes of batching when the air temperature is below 80 degrees F.
   2. Within 75 minutes of batching when the air temperature is between 80 and 85 degrees F.
   3. Within 60 minutes of batching when the air temperature is above 85 degrees F.

B. Concrete Temperature – Place concrete when the concrete temperature is between 50 and 90 degrees F unless otherwise specified.

C. Pumping and Conveying Equipment
   1. Do not use equipment or a combination of equipment and the configuration of that equipment that causes a loss of entrained air content that exceeds one-half of the range of air content allowed by specification.
      a. Replace, reconfigure, or repair equipment that does not meet this requirement.

   2. Contractor is responsible to verify and monitor air loss.

D. Cold Weather – Comply with the following when placing, finishing, curing, and protecting concrete exposed to cold weather during the protection period. Cold weather applies when the temperature is forecast to fall below 35 degrees F during the protection period.

1. Provide necessary cold weather protection for placing, finishing, curing and protecting in-place concrete such as covers, insulation, and heat.
    a. Follow the authorized Cold Weather Concreting Plan when placing cast-in-place concrete.
    b. Follow the prequalified supplier's approved Quality Control Plan when fabricating precast concrete members.
2. Concrete materials
    a. Do not use chemical anti-freeze additives in the concrete. This does not apply to normal accelerators. Refer to AASHTO M 194.
    b. Remove and replace concrete damaged by frost action at no additional cost to the Department.
    c. Do not use material containing frost or lumps.
3. Determine the concrete compressive strength by one of the following methods:
    a. Field cured cylinders cured and protected the same as the concrete being protected.
    b. Maturity method. Refer to AASHTO T 325.
4. Maintain the temperature of the concrete at or above 50 degrees F during and after placement until the end of the protection period.
    a. Measure the specified concrete temperature at the concrete surface. Use surface thermometers insulated from the surrounding air.
5. Placing concrete
    a. Do not place concrete during adverse weather including rain, snow, and high winds without adequate protection approved by the Engineer.
    b. Do not proceed with the placement of concrete if the temperature of all contact surfaces, including reinforcement, is less than 36 degrees F or greater than 95 degrees F.
    c. Cease placement operations when the ambient temperature is 40 degrees F and decreasing unless adequate precautions are taken according to the approved Cold Weather Concreting Plan.
6. Protection of in-place concrete
    a. Maintain the concrete above 50 degrees F during placement and until the end of the protection period.
        1) The protection period is the time required for the concrete to reach a compressive strength of at least 3,500 psi.
        2) Extend the duration of the protection period at least 24 hr beyond the termination of the cure before exposing the concrete to freezing temperatures when curing by the water method. Refer to Section 03390.
    b. Comply with the following when heating is required.

1) Adequately vent combustion-type heaters that produce carbon monoxide.
2) Position heaters and ducts so the hot dry air does not cause areas of the concrete surface to overheat or dry.
3) Keep concrete surfaces moist to avoid excessive loss of moisture from the concrete when applying external heat.

7. Termination of protection
   a. Limit the drop in temperature of concrete surfaces to 40 degrees F during any 24 hour period when removing cold weather protection until the surface temperature of the concrete reaches that of the ambient air temperature.

E. Hot Weather – Comply with the following when placing, finishing, curing, and protecting concrete exposed to hot weather during the protection period.
   1. Hot weather limitations apply at any time of the year when a combination of high ambient temperature, high concrete temperature, low relative humidity, and high wind speed have the potential to impair the quality of freshly mixed or hardened concrete by accelerating the rate of moisture loss and the rate of cement hydration, or otherwise causes detrimental results.
   2. Monitor site conditions, including air temperature, relative humidity, and wind speed, to assess the need for evaporation control measures.
      a. Begin monitoring no later than 1 hour before beginning concrete placing operations.
      b. Continue to monitor site conditions at intervals of 20 minutes or less until required curing procedures are applied.
   3. Provide necessary hot weather protection.
      a. Follow the approved Hot Weather Concreting Plan when placing cast-in-place concrete.
      b. Follow the prequalified supplier's approved Quality Control Plan when fabricating precast concrete members.

      c. Initiate evaporation control measures when concrete and air temperatures, relative humidity of the air, and wind speed have the capacity to evaporate free water from the fresh concrete surface at a rate equal to or greater than 0.2 $lb/ft^2/hr$.
         1) Determine the evaporation rate of surface moisture using the NRMCA Nomograph in Appendix B of ACI 305.1.
   4. Cool all surfaces that will come in contact with the concrete to below 95 degrees F

## 3.2 CYLINDER STORAGE DEVICE

A. Provide and maintain cylinder storage device.
   1. Maintain cylinders at a temperature range of 60 degrees F to 80 degrees F for the initial 16 hour curing period.
   2. Do not move the cylinders during this period.
   3. Equip the storage device with an automatic 24 hour temperature recorder that continuously records on a time/temperature chart with an accuracy of ±1 degree F.
   4. Have the storage device available at the point of placement at least 24 hours before placement.
   5. Stop placement of concrete if the storage device is not provided or cannot accommodate the required number of test cylinders. Cylinder strength results may not be disputed if storage devices are not provided.
   6. Use water containing hydrated lime if water is to be in contact with cylinders.
   7. The Engineer may require a 24 hour test run to determine the storage device capability to maintain and record temperature.

END OF SECTION

**Supplemental Specification**
**2017 Standard Specification Book**

**SECTION 03310M**

# STRUCTURAL CONCRETE

Delete Article 1.4 and replace with the following:

## 1.4 DEFINITIONS

A. Finishing Machine – a bridge deck finishing machine or bridge deck paver with automated systems to spread, compact, and finish concrete.

**Add the following to Article 1.5:**

B. Concrete Placing and Finishing Plan for review when placing cast-in-place concrete in bridge decks and approach slabs.
   1. Include at least the following:
      a. Description of equipment, materials, methods, and personnel for placing, finishing, and curing concrete
      b. Quality control plan
      c. Placement schedule for each bridge, including placement rates, time of day, duration, placement sequence, and placement direction
      c. Screed elevations for deck and approach slabs of each bridge

**Delete Article 2.1 and replace with the following:**

## 2.1 CONCRETE

A. Bridge Decks, Approach Slabs, and Concrete Diaphragms cast with bridge decks:
   1. Standalone pedestrian, shared use or multi-use overpass or underpass structures.
      a. Use Class AA(AE). Refer to Section 03055.
   2. Other bridge types.
      a. Use Class AA(LSF). Refer to Section 03055.
         1) Includes top slabs and approach slabs of box culverts with traffic directly on the slabs.
   3. Use Structural Concrete – Lightweight where shown. Refer to Section 03057.

a. Use the concrete class shown.

4. Use Class AA(ES) only where shown for closure pours with full-depth precast concrete deck panels. Refer to Section 03055.

B. Concrete Slope Protection:

1. Class A(AE). Refer to Section 03055.

C. Other Structural Elements:

1. Use Class AA(AE), unless shown otherwise. Refer to Section 03055
2. Use Structural Concrete – Lightweight where shown. Refer to Section 03057.
   a. Use the concrete class shown.
3. Self-Consolidating Concrete (SCC) may be used at the Contractor's option. Refer to Section 03056.
   a. Use the concrete class shown.
   4. Use Class AA(ES) only where shown. Refer to Section 03055.

**Delete Article 2.9 and replace with the following:**

**2.9 EPOXY ADHESIVE**

A. Refer to AASHTO M 235, Type V, Grade 3.

**Add the following to paragraph 3.1 D:**

3. Hold a pre-activity meeting before placing cast-in-place concrete in bridge decks and approach slabs.
   a. Contractor, Department, and supplier personnel involved with completing the work must attend the pre-activity meeting.
   b. Conduct pre-activity meeting no more than seven calendar days before the first scheduled concrete placement.
   c. Provide notification of the meeting to the Engineer at least seven calendar days in advance.
   d. Discuss at least the following items specific to the concrete work for each bridge deck and approach slab:
      1) Material requirements
      2) Schedule, quality control procedures, and verification testing.
      3) Authorized concrete placing and finishing plan
      4) Placement sequence and limits (including pouring sequence, direction of pour)

5) Construction details (for example, bridge skew angle, superelevation, and transitions)
6) Locations of finishing machine rail supports and construction joints (for example, grade control)
7) Concrete conveyance, placement equipment and methods, and rates (including haul distance, haul time, and placement)
8) Special equipment
9) Finishing methods
10) Curing plan (equipment and application rates)
11) Method of verifying placement and clearances of reinforcing steel
12) Contingency plans

e. Additional meetings may be required as determined by the Engineer.

**Delete subparagraph 3.7 D2 and replace with the following:**

2. Bridge decks and approach slabs – use a finishing machine unless otherwise permitted.

**Delete subparagraph 3.9 E1 and replace with the following:**

1. Use a finishing machine on exposed surfaces unless otherwise permitted.

**Delete subparagraph 3.9 E7 and replace with the following:**

7. Place finishing machine parallel to the abutments and bents within 10 degrees.

**Delete subparagraph 3.9 E10 and replace with the following:**

10. Place concrete in a uniform heading approximately parallel to the finishing machine.

**Delete subparagraph 3.9 E17 and replace with the following:**

17. Furnish a 10 ft straightedge to check the surface tolerance, placed both longitudinally and transversely, immediately behind the finishing machine and in hand-finished areas.

**Delete paragraphs 3.12 A and 3.12 B and replace with the following:**

A. Bridge decks and approach slabs
   1. Follow the authorized concrete placing and finishing plan when placing cast-in-place concrete.
   2. Do not place parapet forms or parapet for at least seven days after deck placement and until the deck has attained the specified 28 day minimum compressive strength based on field cured cylinders, unless falsework is left in place and is designed to carry the additional loads that are part of the parapet placement process.
      a. Do not allow the installation of the parapet and parapet forms to interrupt the curing of the deck and approach slabs when installed before curing is complete.

B. Slab Span
   1. Place concrete in one continuous operation.

**Supplemental Specification**
**2017 Standard Specification Book**

**SECTION 03341M**

# PARTIAL-DEPTH PRECAST CONCRETE DECK PANELS

**Delete Paragraph 2.1 A and replace with the following:**

A. Concrete
   1. Use Class AAA(AE) concrete according to Section 03055.
   2. Self-consolidating concrete (SCC) may be used at the Contractor's option. Refer to Section 03056.

**Supplemental Specification**
**2017 Standard Specification Book**

**SECTION 03412M**

# PRESTRESSED CONCRETE

**Delete Article 2.1 and replace with the following:**

## 2.1 CONCRETE

A. Class AAA(AE) concrete according to Section 03055.
   1. The minimum compressive strength for transfer of prestressing force is as shown, but not less than 4,000 psi.
   2. Pay factor for reduced strength in girders is as defined in this Section, Article 1.6.

B. Self-Consolidating Concrete (SCC) may be used at the Contractor's option. Refer to Section 03056.

**Supplemental Specification**
**2017 Standard Specification Book**

**SECTION 05822M**

# ELASTOMERIC BEARINGS

**Delete Paragraph 1.1 C and replace with the following:**

C. Components of elastomeric bearings such as masonry, sole and shim plates, anchor bolts, guide devices, and polytetrafluoroethylene (PTFE) surfacing.

**Delete Paragraph 1.3 G through 1.3 J and replace with the following:**

G. ASTM F 1554: Anchor Bolts, Steel, 36, 55, and 105-ksi Yield Strength

H. AWS D1.6: Structural Welding Code – Stainless Steel

I. American Institute of Steel Construction (AISC)

**Delete Paragraph 1.5 D1 and replace with the following:**

1. Refer to this Section, Article 2.7.

**Delete Article 2.5 through 2.9 and replace with the following:**

## 2.5 STAINLESS STEEL PLATE

A. ASTM A 240, Type 304.

B. Limit thickness to at least $^{1}/_{8}$ inch.

C. Provide a mirror-like finish of 8 micro inch or less (root mean square) on the side that contacts the PTFE.

## 2.6 ANCHOR BOLTS

A. ASTM F 1554, Grade 36, 55, or 105-ksi.
   1. Galvanize according to ASTM A 153.

## 2.7 MANUFACTURE

A Fabricate according to AASHTO LRFD Bridge Construction Specifications, Section 18.1.4 and AASHTO M 251.

1. AISC Highway Metal Components Certification (CPT) is required for fabrication of metal bearing components.

B. Elastomeric bearings with sliding surfaces.
   1. Recess and bond PTFE to top plate at manufacturer's facility.
      a. Recess at least one-half of PTFE thickness.
      b. Do not bond the PTFE to the stainless steel sliding plate.
      c. Make the bonded PTFE surface smooth and free from bubbles.
      d. Polish the filled PTFE surfaces.
   2. Weld the stainless steel with ⅛ inch continuous fillet welds to the sole plate.
      a. Use a single piece of stainless steel.
      b. Do not allow the weld metal to project beyond the plane of the sliding surface.
      c. Use welding procedures compatible with the stainless steel specified.
         1) Refer to AWS D1.6 Structural Welding Code – Stainless Steel.
      d. Stainless steel sheet must be flat, free from wrinkles, and in continuous contact with the sole plate after welding.
   3. Protect stainless steel and PTFE sliding surfaces during manufacture, shipment, and erection.
      a. Clean the sliding surfaces immediately before setting the girder in place.
      b. The Department considers the unit damaged when the sliding surfaces are damaged by scratches, weld splatter, gouges, overspray from painting, and other defects.
   4. Do not exceed coefficient of friction shown.

## 2.8 TESTING

A. Test according to AASHTO LRFD Bridge Construction Specifications and AASHTO M 251.

**Add the following to Article 3.1:**

D. Do not epoxy bond or adhesively bond elastomeric bearing to concrete.

**Supplemental Specification**
**2017 Standard Specification Book**

**SECTION 05829M**

# POURABLE JOINT SEAL

**Delete Article 1.3 and replace with the following:**

## 1.3 REFERENCES

A. ASTM C 639: Rheological (Flow) Properties of Elastomeric Sealants

B. ASTM C 661: Indentation Hardness of Elastomeric – Type Sealants by Means of a Durometer

C. ASTM C 679: Tack-Free Time of Elastomeric Sealants

D. ASTM C 719: Adhesion and Cohesion of Elastomeric Joint Sealants Under Cyclic Movement (Hockman Cycle)

E. ASTM D 412: Vulcanized Rubber and Thermoplastic Elastomers – Tension

F. ASTM D 4285: Indicating Oil or Water in Compressed Air

G. ASTM D 5249: Backer Material for Use with Cold- and Hot-Applied Joint Sealants in Portland-Cement Concrete and Asphalt Joints

**Delete paragraph 2.1 A3 and replace with the following:**

3. Applicable for use on highways or bridges.

**Delete paragraph 2.1 A4 and Table 1 and replace with the following:**

4. Meet the properties listed in Table 1.

Table 1

| **Property** | **Requirements** | **Test Method** |
|---|---|---|
| Leveling | Self Levels | ASTM C 639 |
| Tack Free Time | 150 minutes max. | ASTM C 679 |
| Movement Capability | +100% -50% | ASTM C 719 |
| Ultimate Elongation | 1000% min. | ASTM D 412 |
| Hardness | 10 - 45 (Shore A)<br>50 - 80 (Shore OO) | ASTM C 661 |

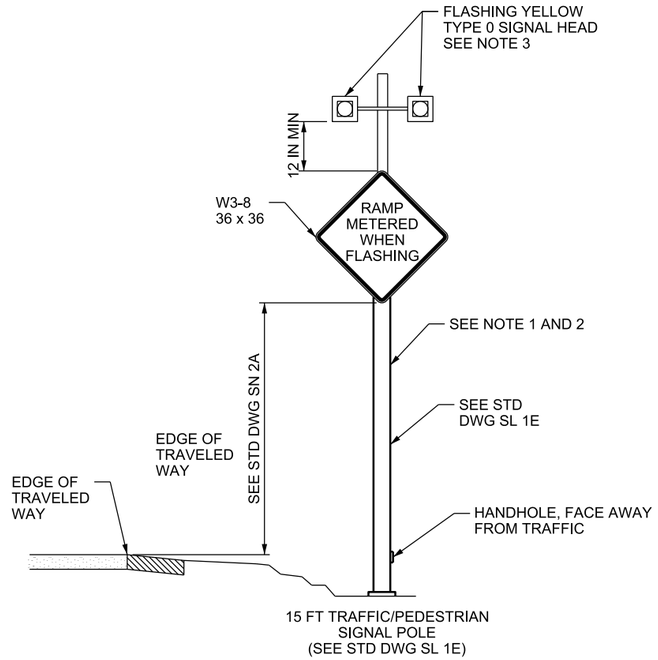


## (A) RAMP METER ADVANCE WARNING SIGN

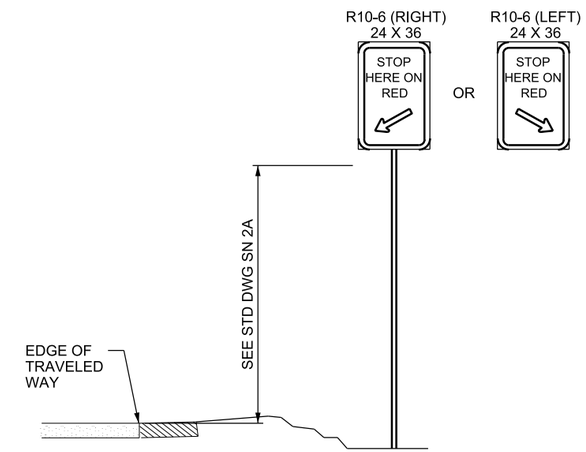


## (B) STOP HERE ON RED SIGN

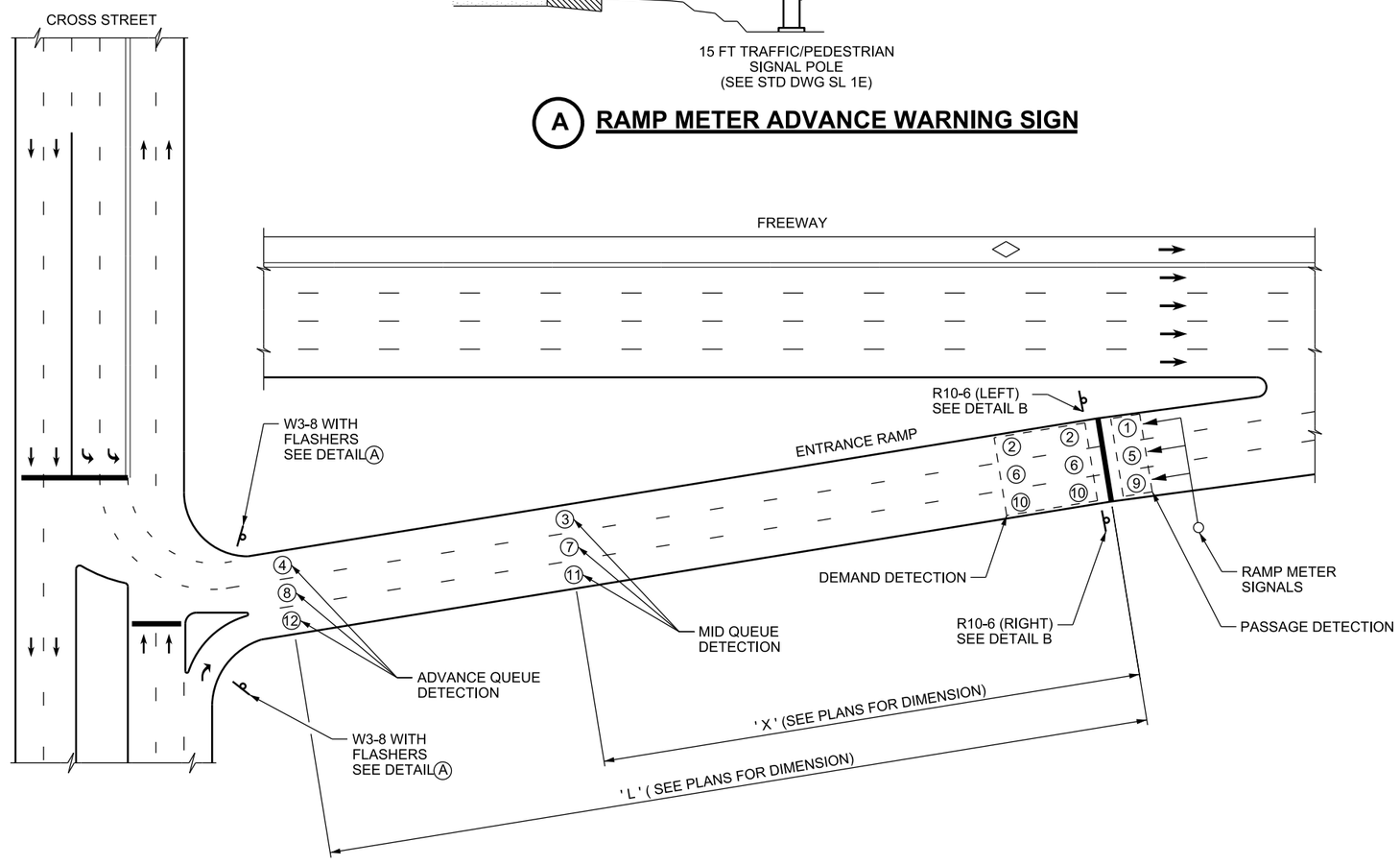


**NOTES:**

1. PLACE POLE ON BREAKAWAY BASE. LOCATE ACCORDING TO SN 2A SERIES STD DWGS.
2. INSTALL AT LOCATION SHOWN ON PLANS REGARDLESS OF NUMBER OF LANES.
3. 12 INCH YELLOW LED. SEE STD DWG SL 3A AND 3B FOR SIGNAL HEAD DETAIL AND MOUNTING. SEE STD DWG AT 4 FOR FLASHER WIRING DETAILS.
4. USE A SEPARATE CONDUCTOR HOME RUN FOR EACH DETECTOR NUMBER ASSIGNMENT.
5. PROVIDE DETECTION LAYOUT MAP IN RAMP METER CABINET.

**LEGEND**

(#) CABINET DETECTOR NUMBER ASSIGNMENT.

SUPPLEMENTAL DRAWING

| NO. | DATE | APPR. | REMARKS |
|---|---|---|---|
| 1 | 6/28/18 | CGW | UPDATED ALL REFERENCES TO SN AND SL SERIES DRAWINGS. |

**UTAH DEPARTMENT OF TRANSPORTATION**
STANDARD DRAWINGS FOR ROAD AND BRIDGE CONSTRUCTION
SALT LAKE CITY, UTAH

RECOMMENDED FOR APPROVAL — JUN. 28, 2018 DATE
CHAIRMAN STANDARDS COMMITTEE APPROVED — JUN. 28, 2018 DATE
DEPUTY DIRECTOR

RAMP METER DETAILS
SIGNING AND DETECTION
STANDARD DRAWING TITLE

STD. DWG. NO.
AT 5

DGN File: D:\StandardsandSpecsSection\2017Section\All Supp Issues\Issue # 5 06-28-2018\Drawings\AT05.dgn
09-JUL-2018

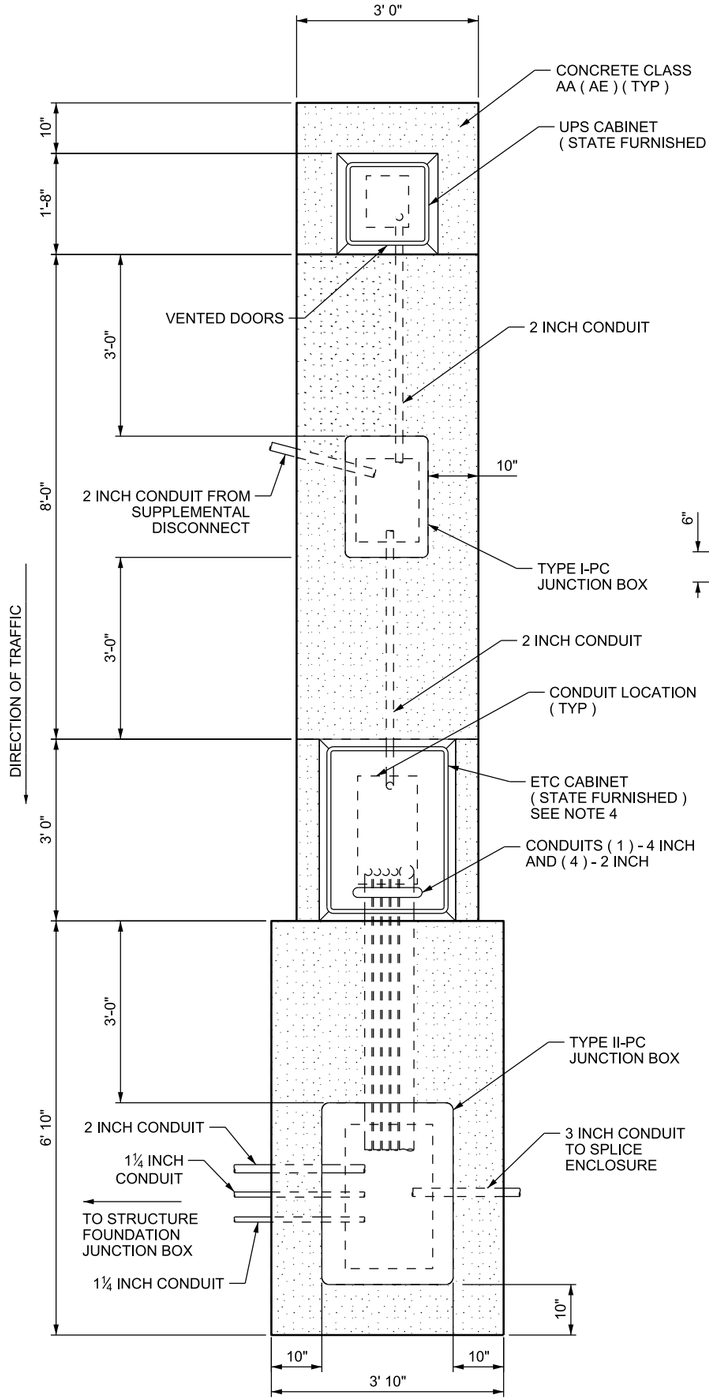


## PLAN VIEW

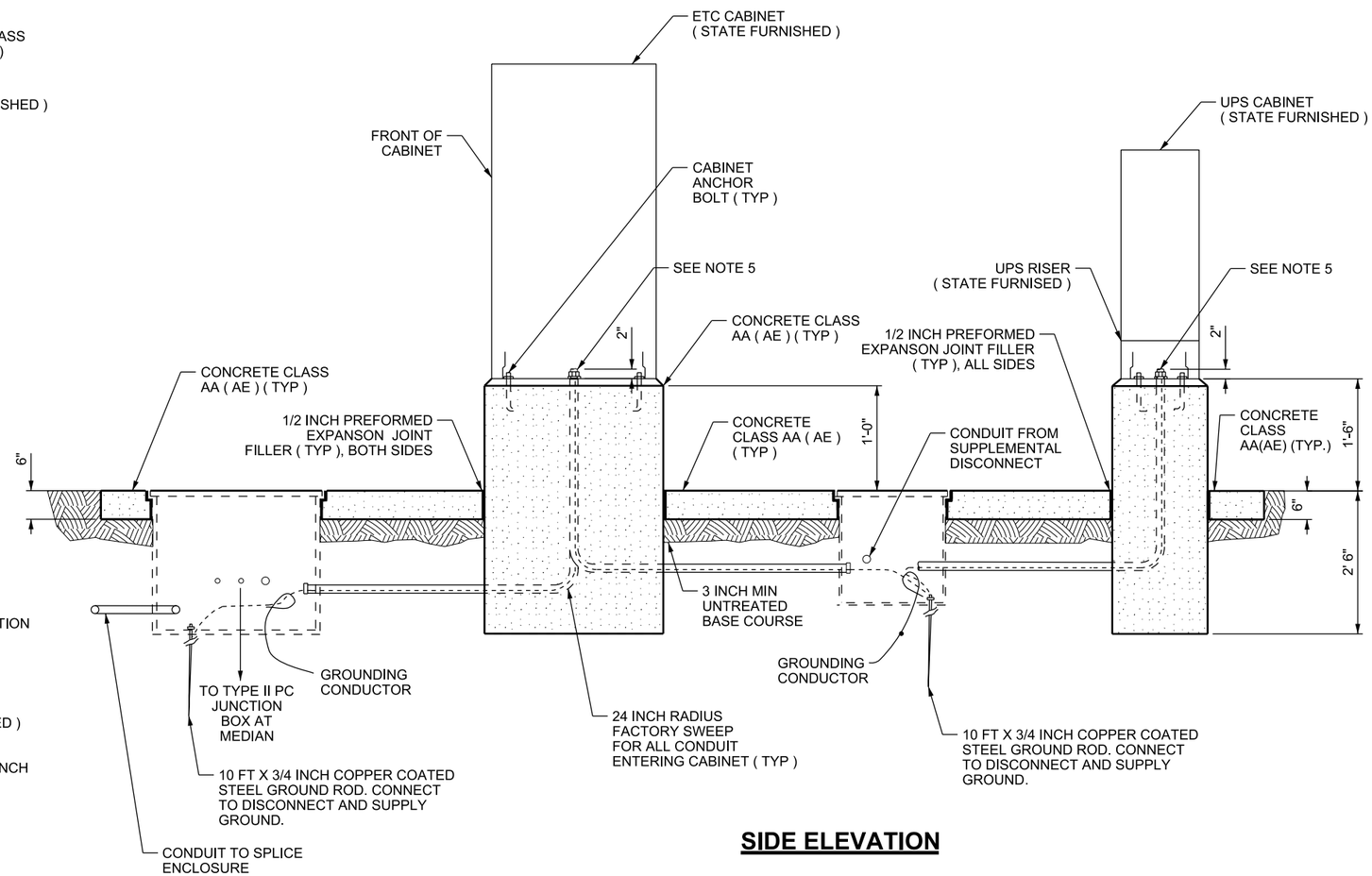


## SIDE ELEVATION

## (A) ETC CABINET

**NOTES:**

1. REFER TO STD DWG AT 9 FOR CABINET DISCONNECT AND TRANSFORMER DETAIL.
2. FIELD VERIFY CONDUIT LAYOUT IN FOUNDATION TO AVOID CONFLICT WITH CABINETS.
3. REFER TO STANDARD SPECIFICATIONS FOR ANCHOR BOLT INFORMATION.
4. DRAWER IN ETC CABINET TO FACE MOST NORTHERN SIDE.
5. INSTALL COARSE STEEL WOOL IN ALL CONDUIT TERMINATED IN CABINETS ( NO DUCT SEAL ).

SUPPLEMENTAL DRAWING

| NO. | DATE | APPR. | REMARKS |
|---|---|---|---|
| 1 | 6/28/18 | CGW | CORRECTED SPELLING ERROR IN TITLE AND TRAVEL DIRECTION ARROW ON LEFT. |

**UTAH DEPARTMENT OF TRANSPORTATION**
STANDARD DRAWINGS FOR ROAD AND BRIDGE CONSTRUCTION
SALT LAKE CITY, UTAH

RECOMMENDED FOR APPROVAL — JUNE 28, 2018 DATE
CHAIRMAN STANDARDS COMMITTEE APPROVED — JUNE 28, 2018 DATE
DEPUTY DIRECTOR

STANDARD DRAWING TITLE
ELECTRONIC TOLL LANES CONTROL SYSTEMS CABINET LAYOUT

STD. DWG. NO.
AT 20

DGN File: D:\StandardsandSpecsSection\2017Section\All Supp Issues\Issue # 5 06-28-2018\Drawings\AT20.dgn
09-JUL-2018

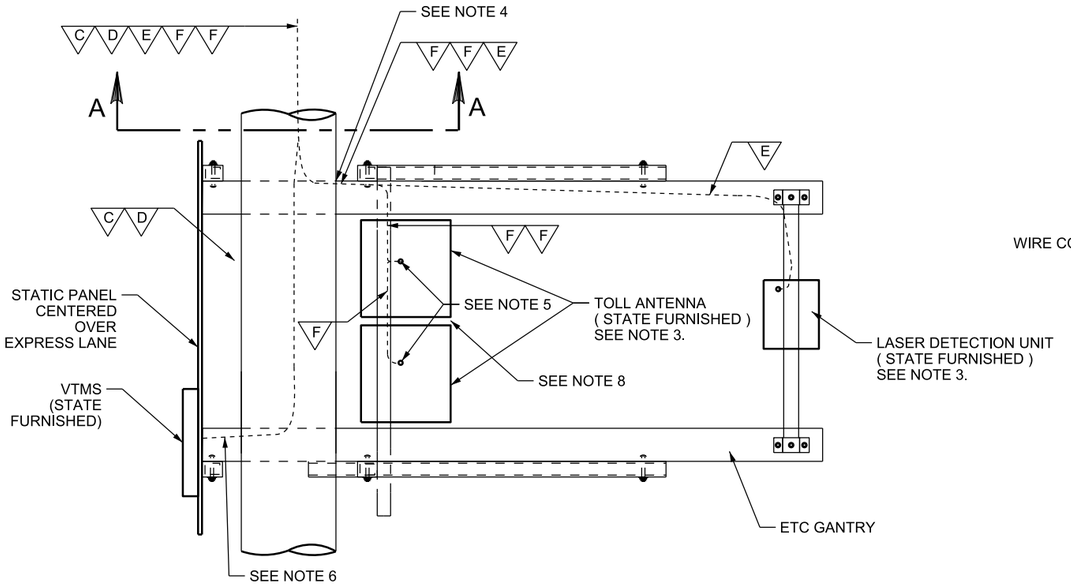


## (A) ETC GANTRY EQUIPMENT LOCATION DETAIL

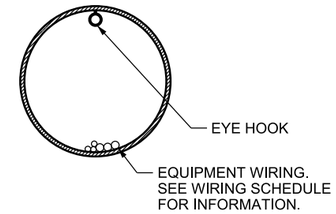


## SECTION A-A

WIRE CONFIGURATION THROUGH STRUCTURE TO ETC EQUIPMENT / VTMS

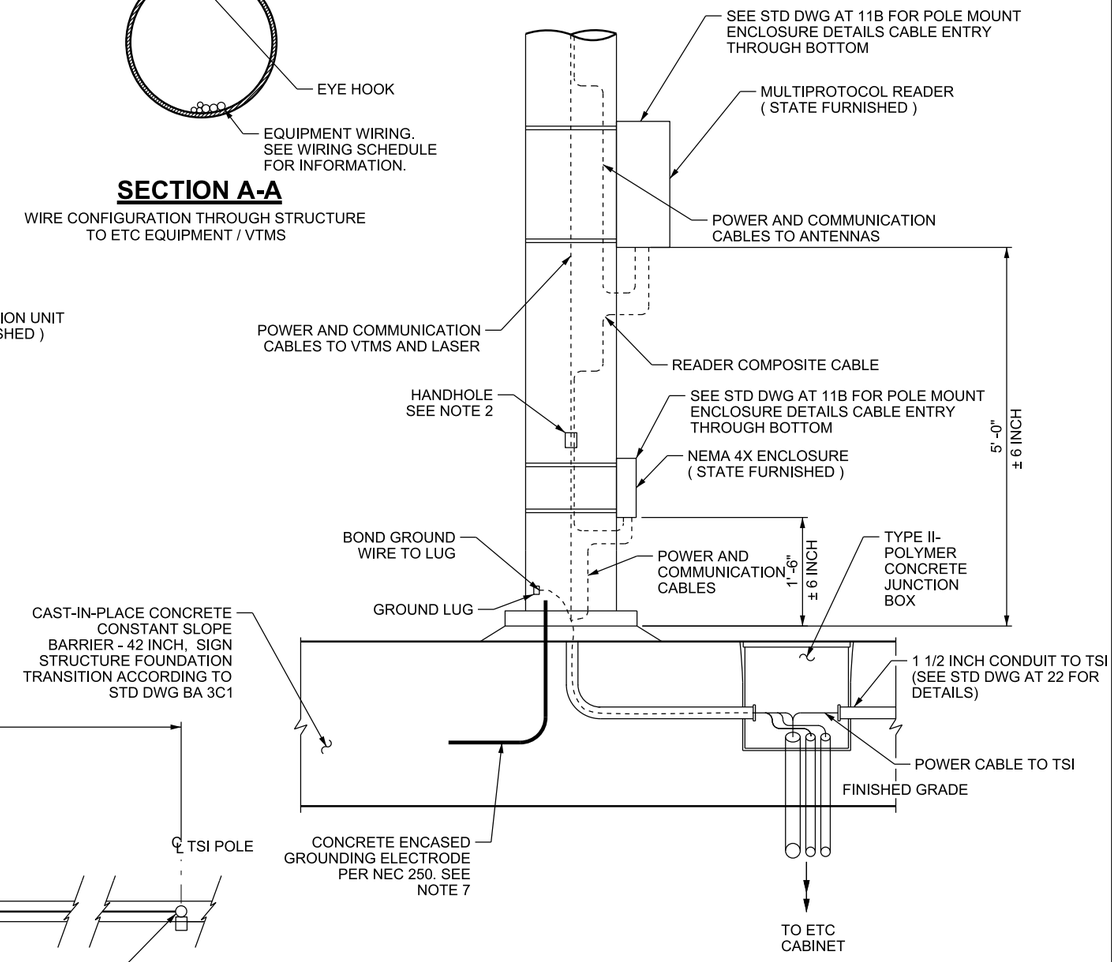


## SECTION B-B

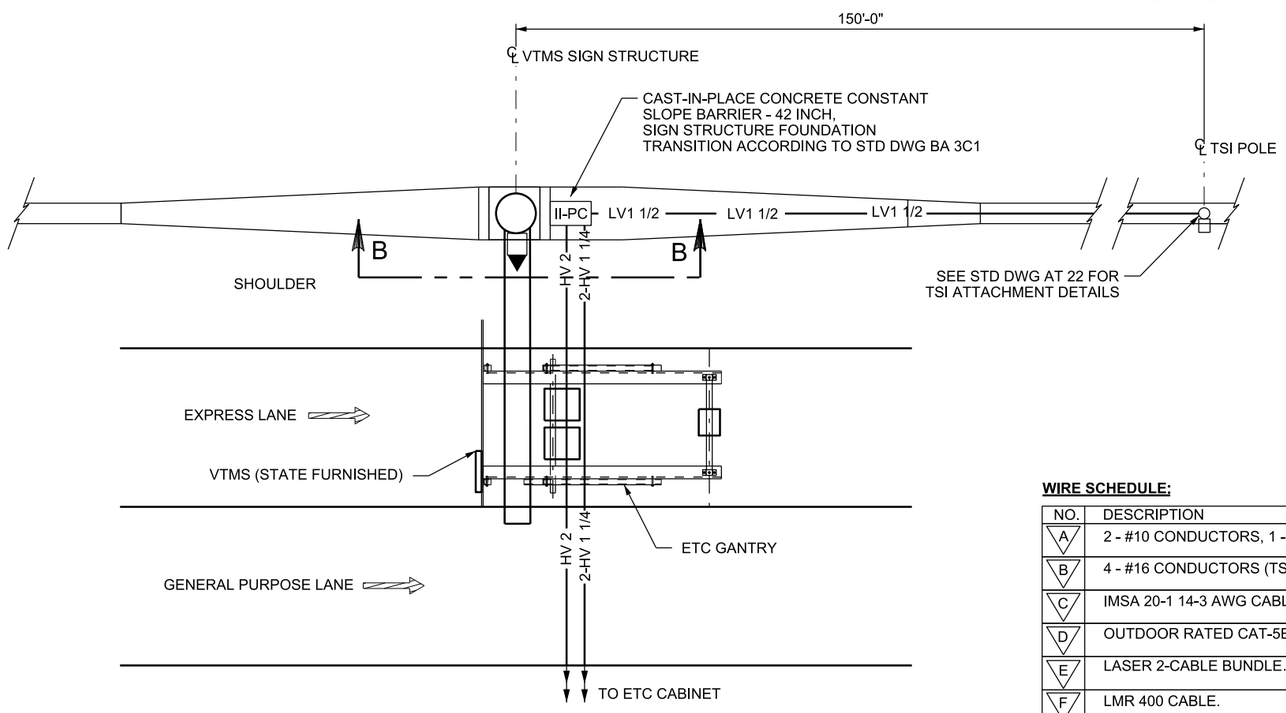


## (C) ETC PLAZA DETAIL

**WIRE SCHEDULE;**

| NO. | DESCRIPTION |
|---|---|
| A | 2 - #10 CONDUCTORS, 1 - #10 EQUIPMENT GROUND. |
| B | 4 - #16 CONDUCTORS (TSI 2A-1604). |
| C | IMSA 20-1 14-3 AWG CABLE. |
| D | OUTDOOR RATED CAT-5E CABLE. |
| E | LASER 2-CABLE BUNDLE. (STATE FURNISHED) |
| F | LMR 400 CABLE. |
| G | READER COMPOSITE CABLE (STATE FURNISHED) |
| H | 6 SMFO PRETERMINATED DROP CABLE. |

**NOTES;**

1. SEE STRUCTURE DRAWINGS FOR ETC GANTRY DIMENSIONS AND DETAILS.
2. PLACE NEMA 4X ENCLOSURE TO AVOID CONFLICT WITH HANDHOLE.
3. SEE STD DWG AT 22 FOR GANTRY EQUIPMENT ATTACHMENT DETAILS.
4. USE CABLE EXIT STRAIN RELIEF, 1½ INCH WITH SOLID INSERT OR EQUIVALENT. DRILL HOLES IN INSERT TO CABLE SIZE.
5. USE CABLE ENTRY STRAIN RELIEF, 5 INCH HEAT SHRINK TUBING WITH GLUE. APPLY WITH HEAT GUN ONLY.
6. USE ¾ INCH LIQUID TIGHT FLEXIBLE METAL CONDUIT, TYPE LFMC BETWEEN STRUCTURE AND VTMS.
7. REFER TO STANDARD SPECIFICATION 16530 FOR CONCRETE ENCASED GROUNDING ELECTRODE REQUIREMENTS.
8. GAP BETWEEN ANTENNAS IS 6 INCHES.

SUPPLEMENTAL DRAWING

| NO. | DATE | APPR. | REMARKS |
|---|---|---|---|
| 1 | 6/28/18 | CGW | SPECIFICATION REFERENCE IN NOTE 7 UPDATED. |

**UTAH DEPARTMENT OF TRANSPORTATION**
STANDARD DRAWINGS FOR ROAD AND BRIDGE CONSTRUCTION
SALT LAKE CITY, UTAH

RECOMMENDED FOR APPROVAL — JUNE 28, 2018 DATE
CHAIRMAN STANDARDS COMMITTEE APPROVED — JUNE 28, 2018 DATE
DEPUTY DIRECTOR

STANDARD DRAWING TITLE
ELECTRONIC TOLL LANES CONTROL SYSTEMS ETC GANTRY

STD. DWG. NO.
AT 21

DGN File:Q:\StandardsandSpecs\Section\2017Section\All Supp Issues\Issue # 5 06-28-2018\Drawings\AT21.dgn
09-JUL-2018

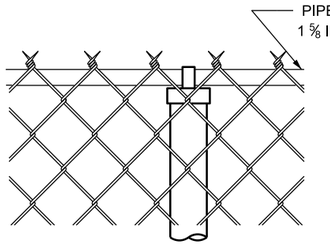


## TWISTED & BARBED SELVAGE TYPE I

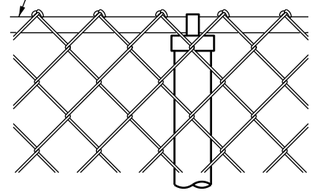

## KNUCKLED SELVAGE TYPE II

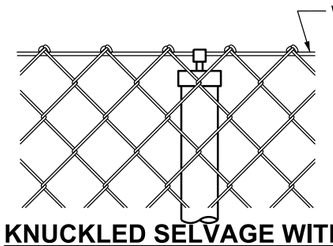


## KNUCKLED SELVAGE WITH TENSION WIRE TYPE III

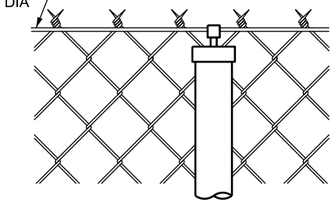

## TWISTED & BARBED SELVAGE WITH TENSION WIRE TYPE IV

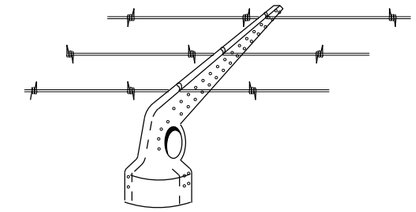

## BARBED WIRE AND ARM

(WHEN REQUIRED)

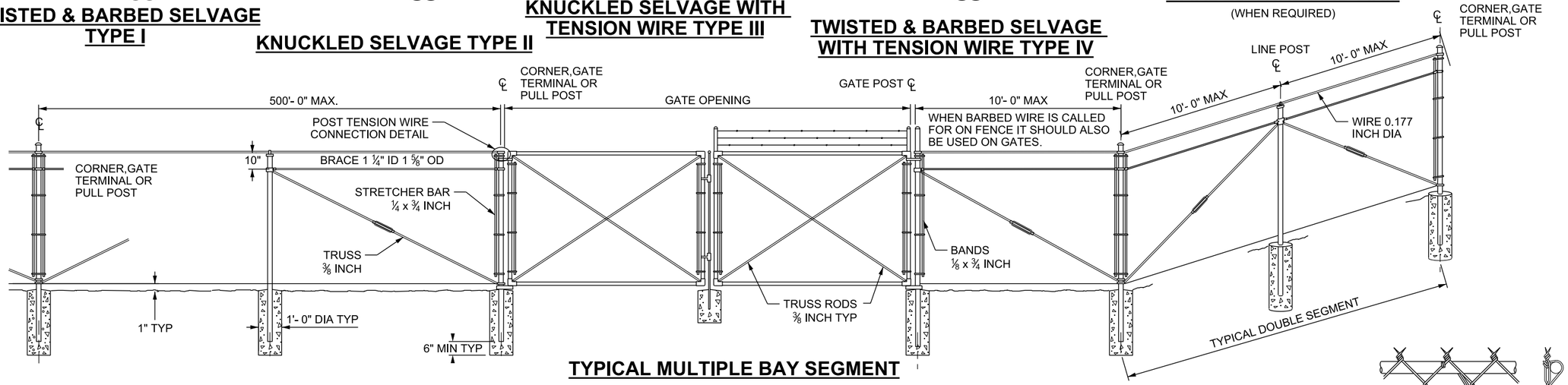


## TYPICAL MULTIPLE BAY SEGMENT

| HEIGHT | GATE OPENING | GATE POST | GATE FRAME |
|---|---|---|---|
| UNDER 6 FT | SINGLE TO 6 FT OR DOUBLE TO 12 FT | 2" | 1" |
| | SINGLE OVER 6 TO 8 FT OR DOUBLE OVER 12 TO 16 FT | 2½" | 1½"" |
| | SINGLE OVER 8 TO 12 FT OR DOUBLE TO 16 TO 24 FT | 3½" | |
| 6 FT AND OVER * | SINGLE TO 6 FT OR DOUBLE TO 12 FT | 2½" | 1½" |
| | SINGLE OVER 6 TO 13 FT OR DOUBLE OVER 12 TO 24 FT | 3½" | |
| | SINGLE OVER 13 TO 18 FT OR DOUBLE OVER 24 TO 36 FT | 6" | |
| | SINGLE OVER 18 FT OR DOUBLE OVER 36 FT | 8" | |

* GATES OVER 6 FT IN HEIGHT AND WIDER THAN 12 FT WILL REQUIRE (3) INDUSTRIAL PRESSED STEEL HINGES.

| HEIGHT OF FABRIC | DEPTH OF POSTS | LENGTH OF END CORNER OR PULL POSTS | LENGTH OF LINE POSTS | SIZE OF POSTS | | | | | | | |
|---|---|---|---|---|---|---|---|---|---|---|---|
| | | | | END, CORNER & PULL POSTS | | | | LINE POST MIN.SIZE | | | |
| | | | | NOM SIZE | OUTSIDE DIA | PIPE WEIGHT | | NOM SIZE | OUTSIDE DIA. | PIPE WEIGHT | |
| | | | | | | ASTM F 1083 | ASTM F1043 GROUP IC | | | ASTM F 1083 | ASTM F1043 GROUP IC |
| 7 FT | 3 FT | 10 FT | 9'- 8" | 2 ½" | 2.875" | 5.80 | 4.64 | 2" | 2.375" | 3.65 | 3.11 |
| 6 FT | 3 FT | 9 FT | 8'- 8" | 2" | 2.375" | 3.65 | 3.11 | 1½" | 1.900" | 2.72 | 2.28 |
| 5 FT | 3 FT | 8 FT | 7'- 8" | 2" | 2.375" | 3.65 | 3.11 | 1½" | 1.900" | 2.72 | 2.23 |
| 4 FT | 2 FT | 6 FT | 5'- 8" | 2" | 2.375" | 3.65 | 3.11 | 1½" | 1.900" | 2.72 | 2.23 |
| 3 FT | 2 FT | 5 FT | 4'- 8" | 2" | 2.375" | 3.65 | 3.11 | 1½" | 1.900" | 2.72 | 2.23 |

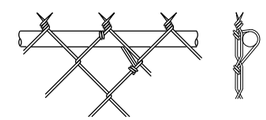

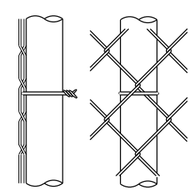

## PIPE POST TIE

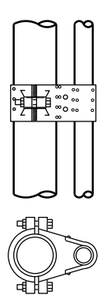

## TOP GATE HINGE

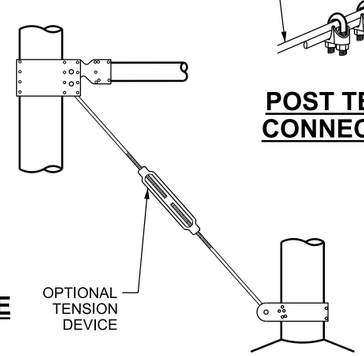


## BRACE & TRUSS CONNECTIONS

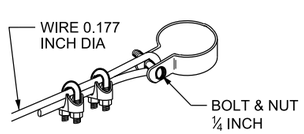


## POST TENSION WIRE CONNECTION DETAIL

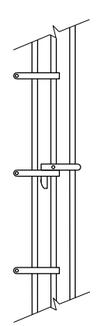

## DROP ROD ASSY

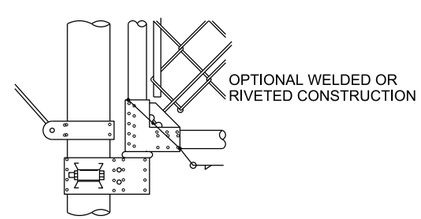


## GATE HINGE DETAIL BOTTOM

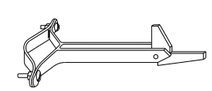

## GATE HOLD BACK DETAIL

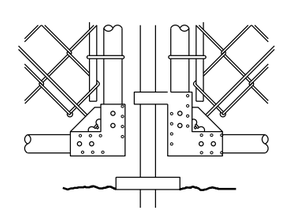

## GATE STOP DETAIL

**NOTES:**

1. POSTS: USE ASTM F 1083 SCHEDULE 40 PIPE OR, ASTM F 1043 GROUP IC (HIGH STRENGTH) PIPE OF THE SIZE SHOWN IN THE CHART. WEIGHT IN LB/FT WITH TOLERANCE OF 10 PERCENT. OTHER TYPES OF POSTS WITH EQUAL OR GREATER SECTION MODULUS MAY BE USED IF APPROVED BY THE ENGINEER.
2. GALVANIZE SCHEDULE 40 PIPE ACCORDING TO ASTM F 1083.
3. COAT HIGH STRENGTH PIPE ACCORDING TO ASTM F 1043 GROUP IC. USE TYPE B COATINGS.
4. TRUSS RODS AND BRACES NOT REQUIRED ON FABRIC HEIGHTS LESS THAN 5 FT.

SUPPLEMENTAL DRAWING

REVISIONS

| NO. | DATE | APPR. | REMARKS |
|---|---|---|---|
| 1 | 6/28/18 | CGW | POST SIZE TABLE: ASTM REF. ADDED AND C-SECTION DIM. REMOVED. NOTES REVISED. |

**UTAH DEPARTMENT OF TRANSPORTATION**
STANDARD DRAWINGS FOR ROAD AND BRIDGE CONSTRUCTION
SALT LAKE CITY, UTAH

RECOMMENDED FOR APPROVAL — JUN. 28, 2018 DATE
CHAIRMAN STANDARDS COMMITTEE APPROVED — JUN. 28, 2018 DATE
DEPUTY DIRECTOR

STANDARD DRAWING TITLE: CHAIN LINK FENCE

STD. DWG. NO. FG 6

DGN File: Q:\Standardsand\Specs\Section\2017Section\All Supp Issues\Issue # 5 06-28-2018\Drawings\FG06.dgn
09-JUL-2018

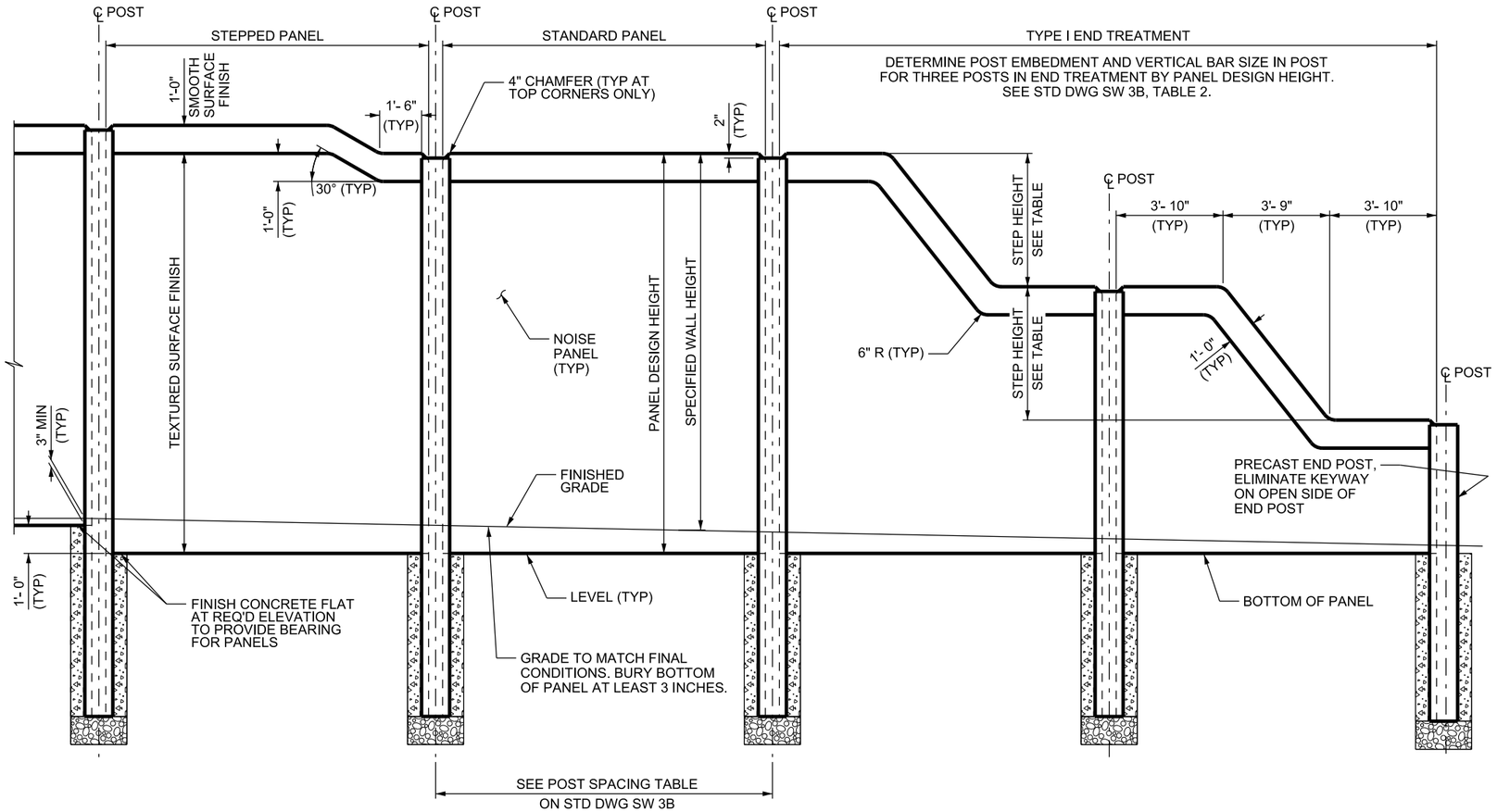


## TYPICAL ELEVATION

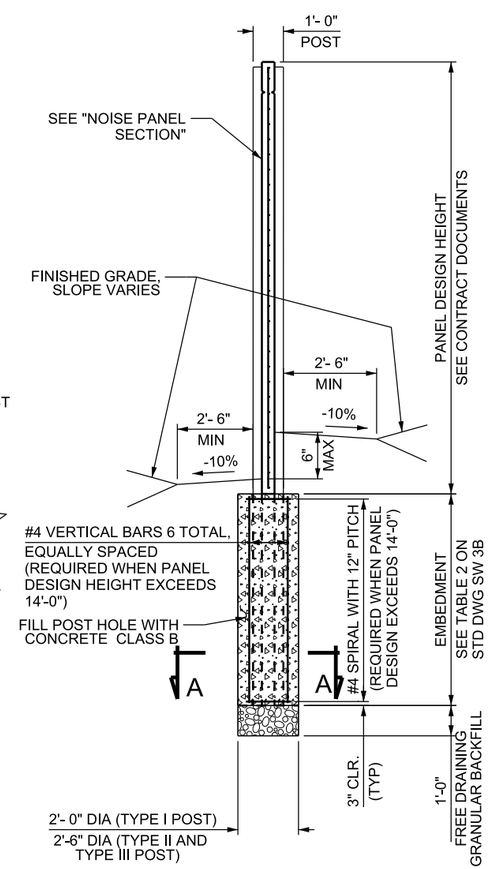


## TYPICAL SECTION

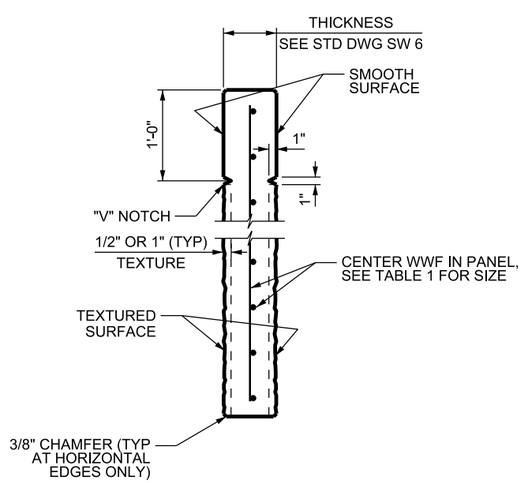


## NOISE PANEL SECTION

### TABLE 1

| PANEL DESIGN HEIGHT | PANEL REINFORCEMENT |
|---|---|
| ≤ 6'-0" | WWF 6x6 - W10xW10 |
| 7'-0" | WWF 6x6 - W10xW10 |
| 8'-0" | WWF 6x6 - W10xW10 |
| 9'-0" | WWF 6x6 - W10xW10 |
| 10'-0" | WWF 6x6 - W10xW10 |
| 11'-0" | WWF 6x6 - W10xW10 |
| 12'-0" | WWF 6x6 - W10xW10 |
| 13'-0" | WWF 6x6 - W20xW20 |
| 14'-0" | WWF 6x6 - W20xW20 |
| 15'-0" | WWF 6x6 - W20xW20 |
| 16'-0" | WWF 6x6 - W20xW20 |
| 17'-0" | WWF 6x6 - W20xW20 |

### TYPE I END TREATMENT DIMENSIONS

| NOISE PANEL DESIGN HEIGHT | STEP HEIGHT | NUMBER OF STEPS |
|---|---|---|
| ≤ 7'-0" | NONE | NONE |
| 8'-0" | 3'-0" | 1 |
| 9'-0" | 4'-0" | 1 |
| 10'-0" | 4'-0" | 1 |
| 11'-0" | 5'-0" | 1 |
| 12'-0" | 3'-6" | 2 |
| 13'-0" | 4'-0" | 2 |
| 14'-0" | 4'-6" | 2 |
| 15'-0" | 4'-6" | 2 |
| 16'-0" | 5'-0" | 2 |
| 17'-0" | 5'-6" | 2 |

**DESIGN DATA**

AASHTO LRFD BRIDGE DESIGN SPECIFICATIONS

PRECAST PANELS & POSTS: CONCRETE CLASS AAA(AE) f'c= 5,000 psi;
fy (REINF) = 60,000 psi; n=8

POST HOLES: CONCRETE CLASS B f'c= 2,500 psi
fy (REINF) = 60,000 psi; n = 10

**NOTES**

1. CHAMFER EXPOSED CONCRETE CORNERS AS SHOWN.
2. SEE CONTRACT DOCUMENTS FOR LOCATION AND SPECIFIED HEIGHT OF PRECAST NOISE WALL.
3. ALL NOISE PANELS ARE:
   HEIGHT: 6 FT MIN TO 17 FT MAX (1 FT INCREMENTS)
   LENGTH: 11 FT - 5 INCHES LONG
   THICKNESS: 7 INCHES
4. DETERMINE PANEL HEIGHTS AND LOCATIONS OF PANEL STEPS TO PROVIDE SPECIFIED MINIMUM WALL HEIGHT THROUGHOUT ENTIRE LENGTH OF WALL, EXCLUDING END TREATMENTS.
5. CHANGE ELEVATION AT TOP OF NOISE WALL WITH STEPPED PANEL AS SHOWN ON THIS SHEET.
6. BEGIN AND END NOISE WALL WITH END TREATMENT SPECIFIED IN THE CONTRACT DOCUMENTS. TYPE I END TREATMENT SHOWN ON THIS SHEET.
7. EVENLY SPACE PILASTER POSTS AT 200 FT MAXIMUM INTERVAL WHEN REQUIRED. SEE STD DWG SW 5 FOR PRECAST PILASTER POST DETAILS. SEE CONTRACT DOCUMENTS FOR EXACT LOCATIONS.
8. FORM A TEXTURED SURFACE FINISH ON BOTH SIDES OF NOISE PANEL. SEE CONTRACT DOCUMENTS FOR PRESCRIBED TEXTURED SURFACE FINISHES.
9. SEE STD DWG SW 3B FOR SECTION A-A.

REVISIONS

| NO. | DATE | APPR. | REMARKS |
|---|---|---|---|
| 1. | 06/28/2018 | RDC | REVISED CONCRETE CLASS |

UTAH DEPARTMENT OF TRANSPORTATION
STANDARD DRAWINGS FOR ROAD AND BRIDGE CONSTRUCTION
SALT LAKE CITY, UTAH

RECOMMENDED FOR APPROVAL — JUNE 28, 2018 — DATE
CHAIRMAN STANDARDS COMMITTEE APPROVED — JUNE 28, 2018 — DATE
DEPUTY DIRECTOR

STANDARD DRAWING TITLE
PRECAST CONCRETE NOISE WALL
1 OF 2

STD. DWG. NO.
SW 3A

DGN File:D:\Standardsand\Specs\Section\2017\Section\All Supp Issues\Issue # 5 06-28-2018\Drawings\SW03A.dgn
09-JUL-2018

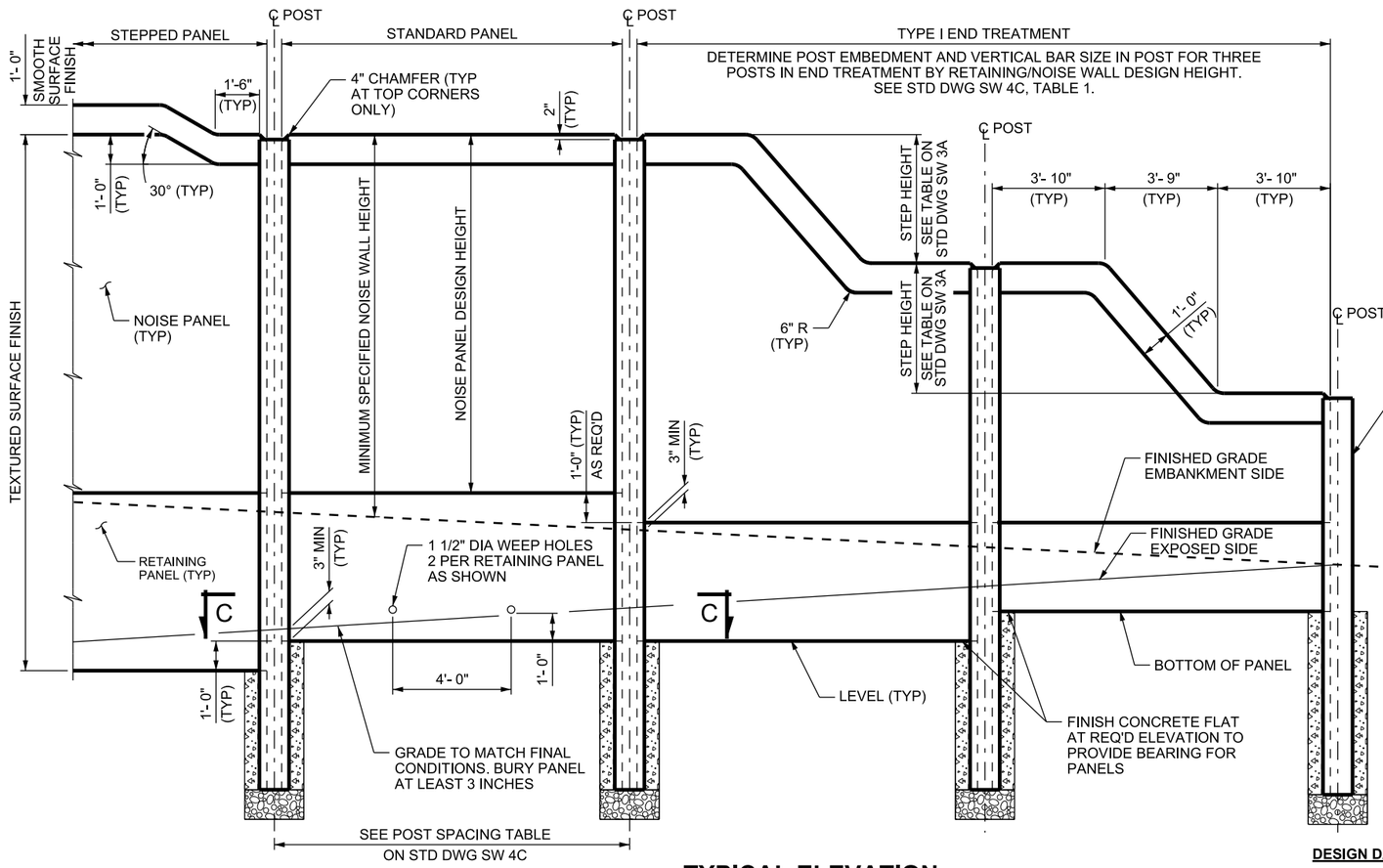


## TYPICAL ELEVATION

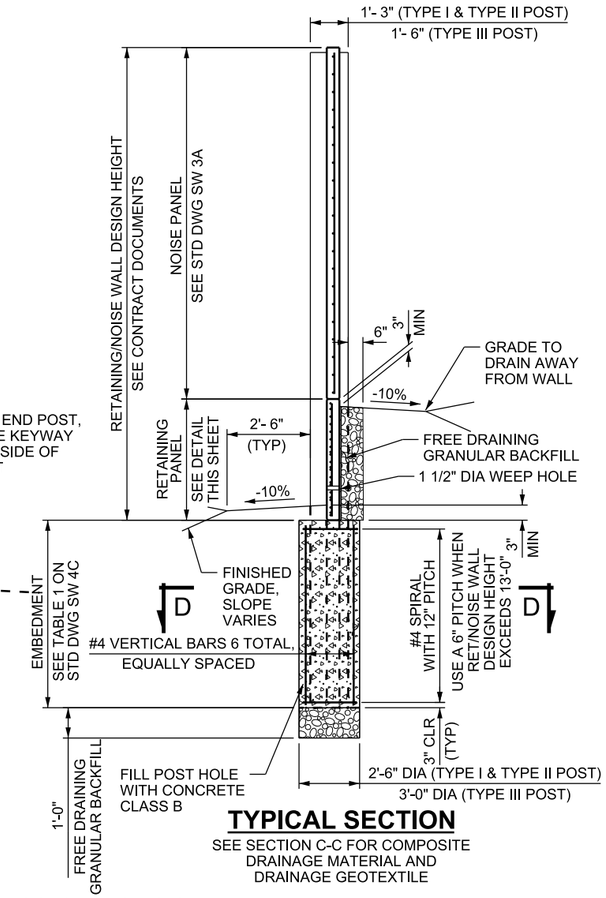


## TYPICAL SECTION

SEE SECTION C-C FOR COMPOSITE DRAINAGE MATERIAL AND DRAINAGE GEOTEXTILE

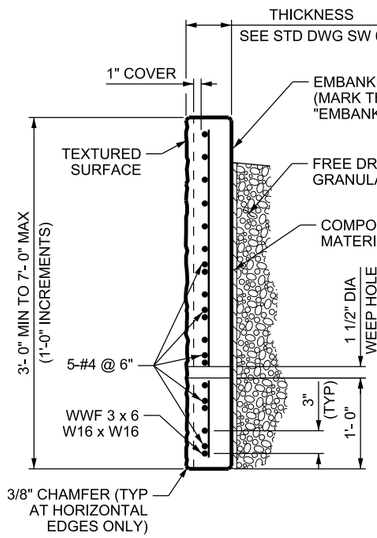


## RETAINING PANEL SECTION

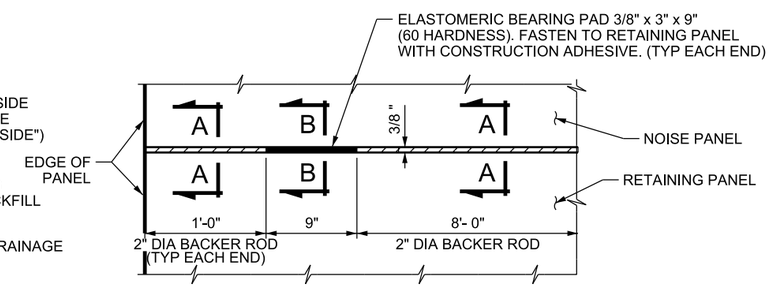


## PANEL CONNECTION DETAIL

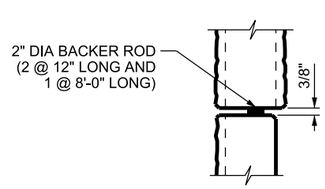


## SECTION A-A

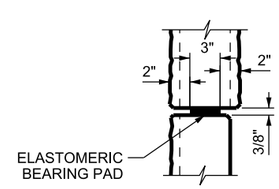


## SECTION B-B

**DESIGN DATA**

AASHTO LRFD BRIDGE DESIGN SPECIFICATIONS

PRECAST PANELS & POSTS: CONCRETE CLASS AAA(AE) f'c = 5,000 psi;
fy (REINF) = 60,000 psi; n=8

POST HOLES: CONCRETE CLASS B f'c = 2,500 psi
fy (REINF) = 60,000 psi; n=10

**NOTES**

1. CHAMFER EXPOSED CONCRETE CORNERS AS SHOWN.
2. SEE CONTRACT DOCUMENTS FOR LOCATION AND HEIGHT OF PRECAST RETAINING/NOISE WALL.
3. PROVIDE MINIMUM SPECIFIED NOISE WALL HEIGHT THROUGHOUT ENTIRE WALL LENGTH, EXCLUDING END TREATMENT.
4. ALL PANELS ARE:

| | RETAINING PANEL | TRANSITION PANEL |
|---|---|---|
| HEIGHT: | 7 FT MAX (1 FT INCREMENTS) | 11 FT MAX (1 FT INCREMENTS) |
| LENGTH: | 11 FT 5 INCHES LONG | 11 FT 5 INCHES LONG |
| THICKNESS: | 6 INCHES | 7 INCHES |

5. SEE STD DWG SW 4B FOR SECTION C-C AND RETAINING PANEL DETAILS. SEE STD DWG SW 4C FOR SECTION D-D.
6. MAXIMUM HEIGHT OF RETAINING/NOISE WALL IS 19 FT.
7. SEE STD DWG SW 3A FOR NOISE PANEL DETAILS.
8. CHANGE ELEVATION AT TOP OF RETAINING/NOISE WALL WITH STEPPED NOISE PANEL AS SHOWN ON THIS SHEET.
9. BEGIN AND END RETAINING/NOISE WALL WITH END TREATMENT SPECIFIED IN THE CONTRACT DOCUMENTS. TYPE I END TREATMENT SHOWN ON SHEET SW 3A.
10. EVENLY SPACE PILASTER POSTS AT 200 FT MAXIMUM INTERVALS WHEN REQUIRED. SEE STD DWG SW 5 FOR PRECAST PILASTER POST DETAILS. SEE CONTRACT DOCUMENTS FOR EXACT LOCATIONS.
11. FORM A TEXTURED SURFACE FINISH ON EXPOSED SIDE OF RETAINING PANEL. SEE CONTRACT DOCUMENTS FOR PRESCRIBED TEXTURED SURFACE FINISH.
12. NOISE PANEL AND RETAINING PANEL MAY BE COMBINED. SEE STD DWG SW 4B FOR DETAILS.

REVISIONS

| NO. | DATE | APPR. | REMARKS |
|---|---|---|---|
| 1. | 06/28/2018 | RDC | REVISED CONCRETE CLASS |

**UTAH DEPARTMENT OF TRANSPORTATION**
STANDARD DRAWINGS FOR ROAD AND BRIDGE CONSTRUCTION
SALT LAKE CITY, UTAH

RECOMMENDED FOR APPROVAL — JUNE 28, 2018 — DATE
CHAIRMAN STANDARDS COMMITTEE APPROVED — JUNE 28, 2018 — DATE
DEPUTY DIRECTOR

PRECAST CONCRETE RETAINING/NOISE WALL 1 OF 3
STANDARD DRAWING TITLE

STD. DWG. NO.
SW 4A

DGN File:Q:\StandardsandSpecs\Section\2017Section\All Supp Issues\Issue # 5 06-28-2018\Drawings\SW04A.dgn
09-JUL-2018

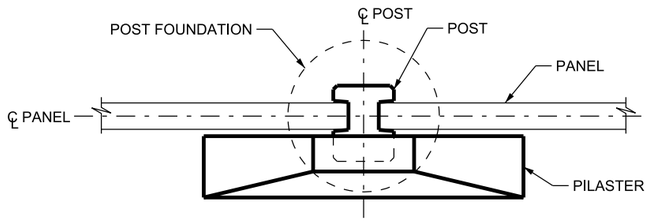


## PLAN

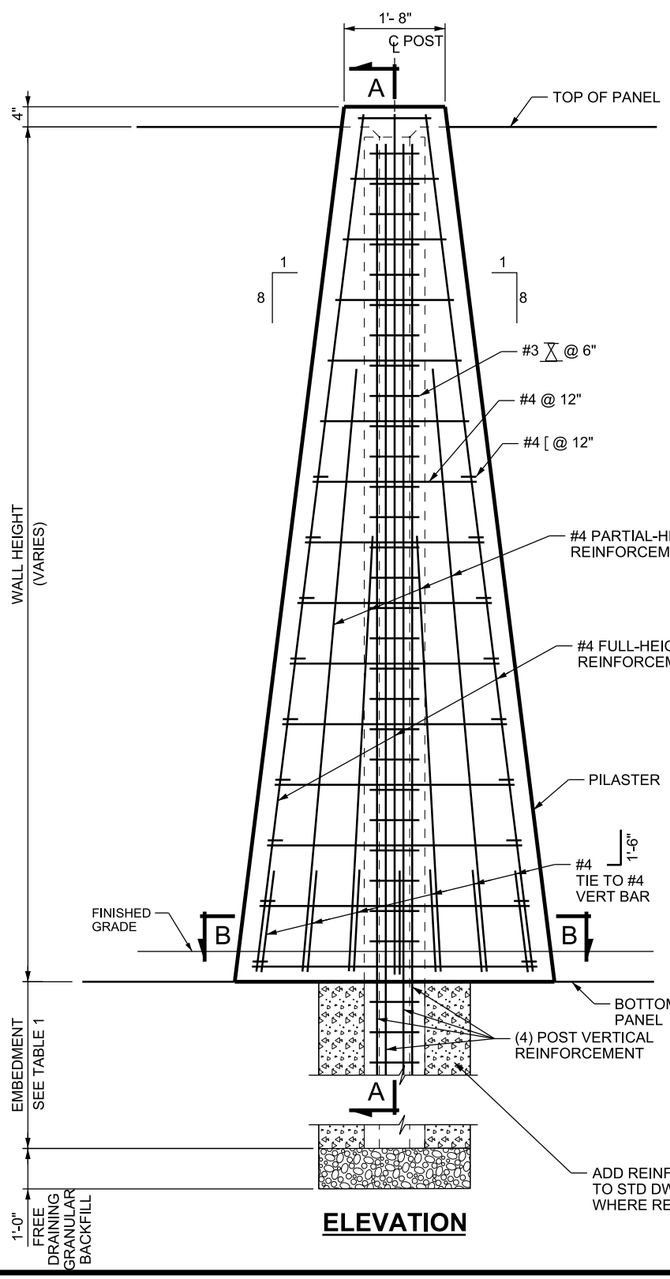


## ELEVATION

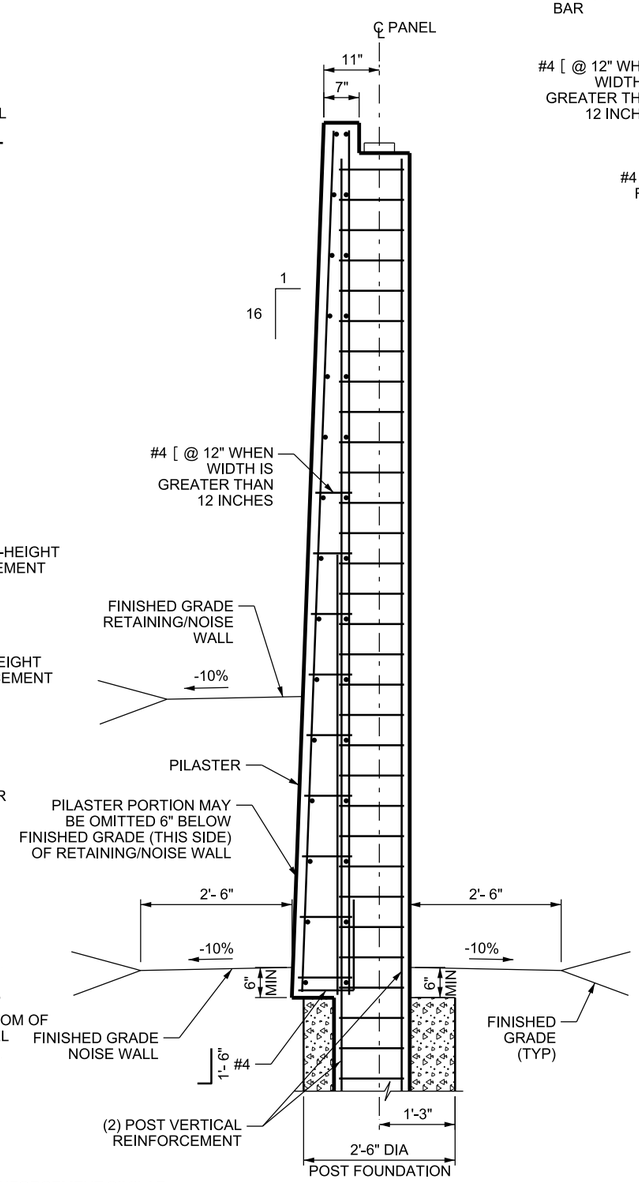


## SECTION A-A

RETAINED SOIL SHOWN ON PILASTER SIDE OF POST.
SOIL MAY ALSO BE RETAINED ON OPPOSITE SIDE OF POST.

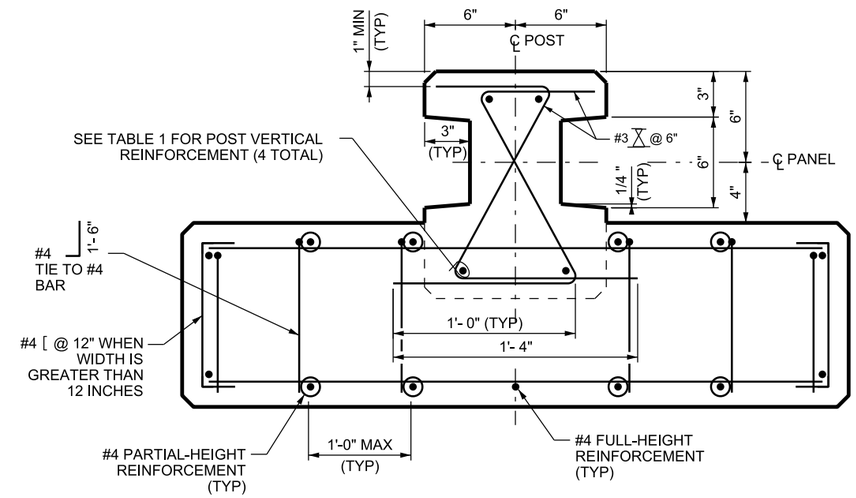


## SECTION B-B

**TABLE 1 - NOISE WALL**

| WALL HEIGHT | POST | |
|---|---|---|
| | VERTICAL BAR SIZE | EMBEDMENT |
| ≤ 6'-0" | #5 | 5'-6" |
| 7'-0" | #5 | 6'-4" |
| 8'-0" | #5 | 7'-3" |
| 9'-0" | #5 | 8'-2" |
| 10'-0" | #7 | 9'-0" |
| 11'-0" | #7 | 9'-11" |
| 12'-0" | #8 | 10'-10" |
| 13'-0" | #8 | 11'-9" |
| 14'-0" | #8 | 12'-8" |
| 15'-0" | #10 | 13'-6" |
| 16'-0" | #10 | 14'-5" |
| 17'-0" | #10 | 15'-4" |

**TABLE 1 - RETAINING/ NOISE WALL**

| WALL HEIGHT | POST | |
|---|---|---|
| | VERTICAL BAR SIZE | EMBEDMENT |
| ≤ 7'-0" | #7 | 9'-0" |
| 8'-0" | #7 | 9'-3" |
| 9'-0" | #7 | 9'-6" |
| 10'-0" | #7 | 9'-8" |
| 11'-0" | #7 | 9'-11" |
| 12'-0" | #8 | 10'-10" |
| 13'-0" | #8 | 11'-9" |
| 14'-0" | #8 | 12'-8" |
| 15'-0" | #10 | 13'-6" |
| 16'-0" | #10 | 14'-5" |
| 17'-0" | #10 | 15'-4" |
| 18'-0" | #11 | 16'-3" |
| 19'-0" | #11 | 17'-2" |

**DESIGN DATA**

AASHTO LRFD BRIDGE DESIGN SPECIFICATIONS

PRECAST PANELS & POSTS: CONCRETE CLASS AAA(AE) f'c = 5,000 psi;
fy (REINF) = 60,000 psi; n=8

POST HOLES: CONCRETE CLASS B f'c = 2,500 psi
fy (REINF) = 60,000 psi; n=10

**NOTES**

1. CHAMFER ALL EXPOSED CONCRETE CORNERS 3/4 INCH EXCEPT WHERE SPECIFIED OTHERWISE.
2. PROVIDE 2 INCH CONCRETE COVER TO REINFORCING STEEL EXCEPT WHERE SPECIFIED OTHERWISE.
3. ALL EXPOSED SURFACES TO HAVE A SMOOTH SURFACE FINISH.
4. DO NOT PLACE PILASTERS ON WALLS GREATER THAN 19 FT HIGH.
5. EVENLY SPACE PILASTER POSTS AT 200 FT MAXIMUM INTERVALS. SEE CONTRACT DOCUMENTS FOR EXACT LOCATIONS.
6. PLACE PILASTER ON HIGHWAY SIDE OF NOISE WALLS.
7. PLACE PILASTER ON HIGHWAY SIDE OF RETAINING/NOISE WALLS.
8. PLACE 1 FT WIDE DRAINAGE GEOTEXTILE ALONG JOINT BETWEEN PILASTER AND PANEL (2 LOCATIONS PER PILASTER) FROM THE TOP OF FINISHED GRADE TO THE BOTTOM OF RETAINING PANEL WHEN PILASTER IS ON EMBANKMENT SIDE OF RETAINING/NOISE WALLS. WRAP FREE DRAINING GRANULAR BACKFILL AROUND PILASTER.

REVISIONS

| NO. | DATE | APPR. | REMARKS |
|---|---|---|---|
| 1. | 06/28/2018 | RDC | REVISED CONCRETE CLASS |

UTAH DEPARTMENT OF TRANSPORTATION
STANDARD DRAWINGS FOR ROAD AND BRIDGE CONSTRUCTION
SALT LAKE CITY, UTAH

RECOMMENDED FOR APPROVAL — JUNE 28, 2018 DATE
CHAIRMAN STANDARDS COMMITTEE APPROVED — JUNE 28, 2018 DATE
DEPUTY DIRECTOR

PRECAST PILASTER POST

STANDARD DRAWING TITLE

STD. DWG. NO.
SW 5

DGN File:Q:\StandardsandSpecsSection\2017Section\All Supp Issues\Issue # 5 06-28-2018\Drawings\SW05.dgn
09-JUL-2018

# TABLE I
# TAPER, BUFFER ZONE & SIGN SPACING CHART

| ROAD TYPE | POSTED SPEED MPH (S) | MINIMUM TAPER LENGTH (L) | LENGTH OF BUFFER (BZ)* | MINIMUM SIGN SPACING (SS)** | | | |
|---|---|---|---|---|---|---|---|
| | | 12 FT LANE CLOSURE | | A | B | C | D |
| | | FT | FT | FT | FT | FT | FT |
| FREEWAY/ EXPRESSWAY | 65 | 780 | 645 | 1000 | 1640 | 2640 | 500 |
| | 70 | 840 | 730 | | | | |
| | 75 | 900 | 820 | | | | |
| | 80 | 960 | 910 | | | | |

* THE LENGTH OF BUFFER (BZ) MAY BE REDUCED WITH THE APPROVAL OF THE ENGINEER
** MAXIMUM SPACING IS THE GIVEN VALUE (SS) MULTIPLIED BY 1.5

## 1- TAPER LENGTH FORMULAS

| SPEED | FORMULA |
|---|---|
| FOR SPEEDS OF 45 MPH AND GREATER | L= WS |

L = TAPER LENGTH IN FEET
W = WIDTH OF OFFSET IN FEET
S = SPEED IN MPH
⅓ L = FOR SHOULDER CLOSURE TAPER
½ L = FOR LANE SHIFT TAPER

## CHANNELIZING DEVICES

A) MERGING AND SHIFTING TAPERS: USE A MINIMUM OF ONE DEVICE PER FT OF LANE CLOSURE WIDTH, PLUS ONE ADDITIONAL DEVICE TO START.

B) SHOULDER, ONE-LANE TWO-WAY, AND DOWNSTREAM TAPERS: USE A MINIMUM OF ONE DEVICE PER 3 FT OF WIDTH (OR PORTION THEREOF), PLUS ONE ADDITIONAL DEVICE TO START.

C) ON TANGENT: S x 2 = SPACING UP TO 120 FT MAXIMUM.

D) LENGTH OF BUFFER ZONE (BZ) IS THE DISTANCE FROM END OF LANE CLOSURE TAPER TO WORK SPACE, OR ANY OBSTRUCTION PRIOR TO WORK SPACE.

## TRAFFIC CONTROL DEVICE LEGEND

- SIGN (FIXED OR PORTABLE)
- CHANNELIZING DEVICE (SEE STD DWG TC 2A)
- DRUMS OR DIRECTIONAL INDICATOR BARRICADE
- FLAGGING STATION
- ARROW BOARD
- BARRIER
- DIRECTION OF TRAFFIC
- TYPE 3 BARRICADE
- DIRECTION OF WORK VEHICLE

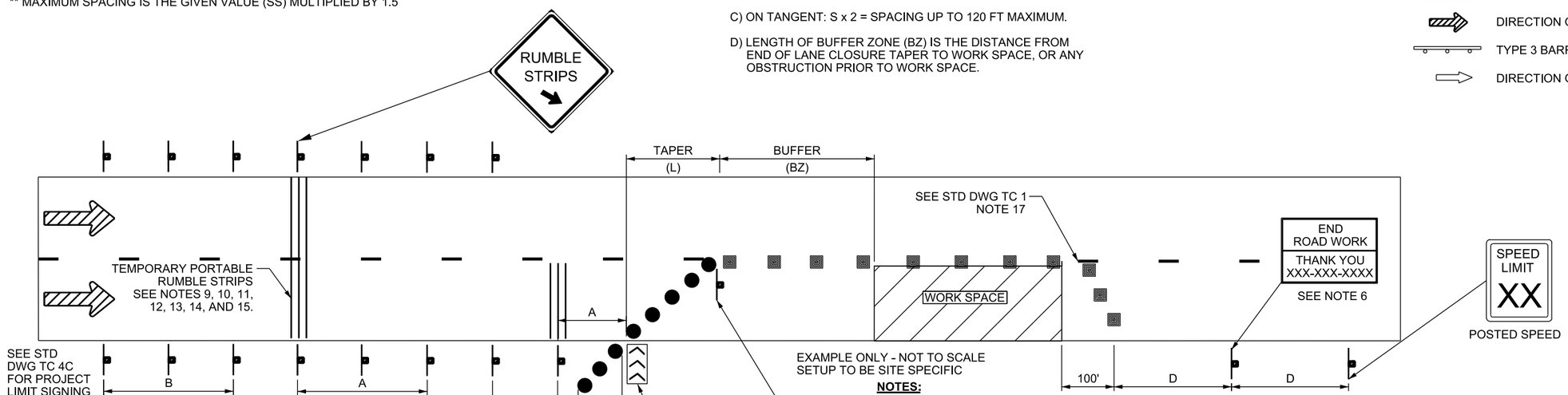


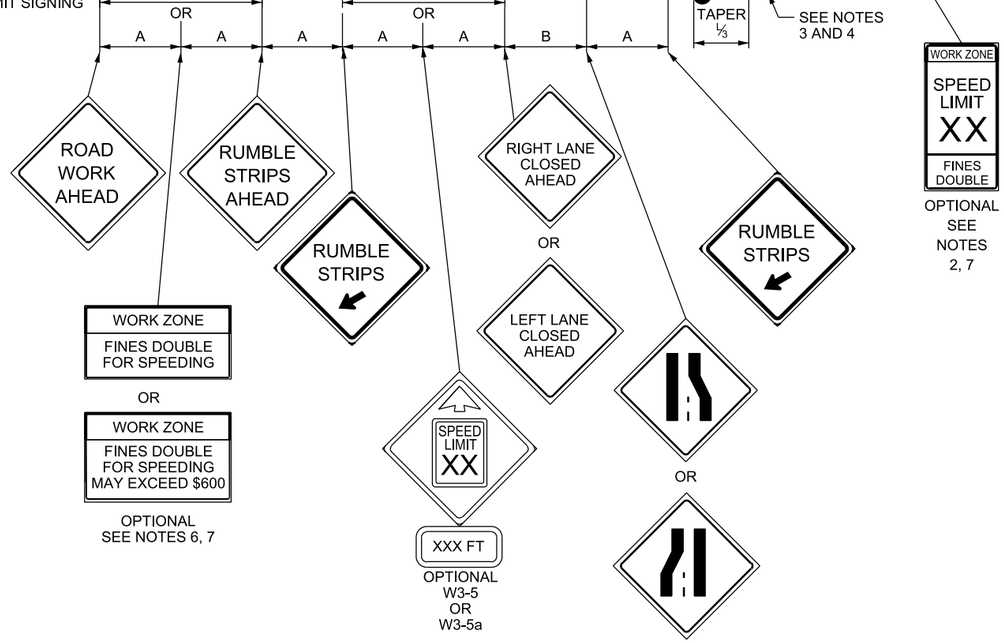


**NOTES:**

1. USE THE PRE-CONSTRUCTION POSTED SPEED LIMIT PRIOR TO WORK ZONE TO COMPUTE THE SIGN SPACING, TAPER LENGTH, BUFFER ZONE, AND WORK CLEAR ZONE DISTANCE. USE THE POSTED SPEED LIMIT DURING WORK TO DETERMINE THE TANGENT SPACING FOR CHANNELIZING DEVICES.
2. SIGN MAY BE USED IN WORK ZONES WHERE SPEED LIMIT IS NOT REDUCED.
   A. REPLACE EXISTING SPEED LIMIT SIGNS WITH RS2-6c ASSEMBLIES.
   B. PLACE ADDITIONAL WORK ZONE SPEED LIMIT ASSEMBLIES (RS2-1a), FINES DOUBLE (RS2-6c), AND FINES DOUBLE WITH FINE NOTIFICATION (RS2-6d) SIGNS AT ALL MAJOR INTERSECTIONS AND INTERCHANGES WITHIN THE PROJECT WHEN REDUCED SPEEDS AND THE FINES DOUBLE OR THE FINES DOUBLE WITH FINE NOTIFICATION SIGNING OPTION IS USED.
3. PLACE ARROW BOARD ON SHOULDER WHEN AVAILABLE. PLACE ARROW BOARD IN FIRST 1/3 OF TAPER IN THE CLOSED LANE WHEN NO ADEQUATE SHOULDER IS AVAILABLE.
4. USE SHOULDER TAPER WHEN ARROW BOARD IS PLACED ON SHOULDER.
5. USE THE IDENTICAL LEGEND SUPPLEMENTAL LEFT SIDE SIGNING FOR HIGH-SPEED DIVIDED HIGHWAYS.
6. SEE TC 4D SERIES STD DWGS FOR SIGN DESIGN AND LAYOUT.
7. FINES DOUBLE (RS2-6c) AND FINES DOUBLE WITH FINE NOTIFICATION (RS2-6d) SIGNS MAY BE USED INTERCHANGEABLY.
8. TEMPORARY PORTABLE RUMBLE STRIP ARRAY CONSISTS OF THREE TRANSVERSELY PLACED RUMBLE STRIPS EVENLY SPACED AT 40 FT ON CENTER.
9. PLACE WS28-1 RUMBLE STRIPS AHEAD SIGN PRIOR TO PLACING TEMPORARY PORTABLE RUMBLE STRIPS.
10. REMOVE TEMPORARY PORTABLE RUMBLE STRIPS PRIOR TO REMOVING WS28-1 RUMBLE STRIPS AHEAD SIGN.
11. RESET THE TEMPORARY PORTABLE RUMBLE STRIPS AS NECESSARY TO MAINTAIN PROPER ALIGNMENT, SPACING, AND LOCATION. REFER TO SPECIAL PROVISION 01554M FOR MAINTENANCE OF TEMPORARY PORTABLE RUMBLE STRIPS.
12. DO NOT USE TEMPORARY PORTABLE RUMBLE STRIPS ON HORIZONTAL CURVES UNLESS APPROVED BY THE ENGINEER.
13. DO NOT PLACE TEMPORARY PORTABLE RUMBLE STRIPS DURING SNOW EVENTS.
14. PLACE ONE TEMPORARY PORTABLE RUMBLE STRIP ARRAY IN EACH TRAVEL LANE.
15. PLACE ONE TEMPORARY PORTABLE RUMBLE STRIP ARRAY AT DISTANCE "A" (SEE TABLE 1) IN ADVANCE OF EACH LANE CLOSURE TAPER IN EACH LANE THAT IS BEING CLOSED.
16. RELOCATE THE TEMPORARY PORTABLE RUMBLE STRIPS AND ASSOCIATED SIGNING WHEN VEHICLE QUEUES ARE EXPECTED OR OCCUR IN ADVANCE OF TEMPORARY PORTABLE RUMBLE STRIPS.
17. REDUCED SPEEDS WILL NOT BE ALLOWED WITHOUT THE APPROVAL OF THE ENGINEER. USE THE REDUCED SPEED LIMIT AHEAD SIGN, THE FINES DOUBLE SPEED LIMIT SIGN, AND THE SPEED LIMIT SIGN.
18. USE THE STANDARDS FOUND ON THIS DRAWING ON RURAL TWO LANE FREEWAYS.

SUPPLEMENTAL DRAWING

REVISIONS

| NO. | DATE | APPR. | REMARKS |
|---|---|---|---|
| 1 | 6/28/18 | RT | REPLACED WS28-2 AND W16-7 ASSEMBLY WITH NEW WS28-2 SIGN. |

**UTAH DEPARTMENT OF TRANSPORTATION**
STANDARD DRAWINGS FOR ROAD AND BRIDGE CONSTRUCTION
SALT LAKE CITY, UTAH

RECOMMENDED FOR APPROVAL — JUNE 28, 2018 DATE
CHAIRMAN STANDARDS COMMITTEE APPROVED — JUNE 28, 2018 DATE
DEPUTY DIRECTOR

STANDARD DRAWING TITLE
TEMPORARY PORTABLE RUMBLE STRIPS FREEWAY

STD. DWG. NO.
TC 4B2

DGN File:D:\StandardsandSpecsSection\2017Section\All Supp Issues\Issue # 5 06-28-2018\Drawings\TC04B2.dgn
09-JUL-2018

# TAPER, BUFFER ZONE & SIGN SPACING CHART

| ROAD TYPE | POSTED SPEED MPH (S) | MINIMUM TAPER LENGTH (L) | LENGTH OF BUFFER (BZ)* | MINIMUM SIGN SPACING (SS)** | | | | |
|---|---|---|---|---|---|---|---|---|
| | | 12 FT LANE CLOSURE | | A | B | C | D | TAPER LENGTH |
| | | FT | FT | FT | FT | FT | FT | FT |
| CONVENTIONAL | 30 AND LOWER | 180 | 200 | 100 | 100 | 100 | 100 | 50 |
| | 35 | 245 | 250 | 350 | 350 | 350 | 175 | |
| | 40 | 320 | 305 | | | | | |
| | 45 | 540 | 360 | 500 | 500 | 500 | 250 | 100 |
| | 50 | 600 | 425 | | | | | |
| | 55 | 660 | 495 | | | | | |
| | 60 | 720 | 570 | | | | | |
| | 65 | 780 | 645 | | | | | |
| FREEWAY/ EXPRESSWAY | 65 | 780 | 645 | 1000 | 1640 | 2640 | 500 | |
| | 70 | 840 | 730 | | | | | |
| | 75 | 900 | 820 | | | | | |
| | 80 | 960 | 910 | | | | | |

* THE LENGTH OF BUFFER (BZ) MAY BE REDUCED WITH THE APPROVAL OF THE ENGINEER
** MAXIMUM SPACING IS THE GIVEN VALUE (SS) MULTIPLIED BY 1.5

## 1- TAPER LENGTH FORMULAS

| SPEED | FORMULA |
|---|---|
| FOR SPEEDS OF 40 MPH AND LESS | $L=\frac{WS^2}{60}$ |
| FOR SPEEDS OF 45 MPH AND GREATER | L= WS |

L = TAPER LENGTH IN FEET
W = WIDTH OF OFFSET IN FEET
S = SPEED IN MPH

⅓ L = FOR SHOULDER CLOSURE TAPER
½ L = FOR LANE SHIFT TAPER

## 2- CHANNELIZING DEVICES

A) MERGING AND SHIFTING TAPERS: USE A MINIMUM OF ONE DEVICE PER FT OF LANE CLOSURE WIDTH, PLUS ONE ADDITIONAL DEVICE TO START.

B) SHOULDER, ONE-LANE TWO-WAY, AND DOWNSTREAM TAPERS: USE A MINIMUM OF ONE DEVICE PER 3 FT OF WIDTH (OR PORTION THEREOF), PLUS ONE ADDITONAL DEVICE TO START.

C) ON TANGENT: S x 2 = SPACING UP TO 120 FT MAXIMUM.

D) LENGTH OF BUFFER ZONE (BZ) IS THE DISTANCE FROM END OF LANE CLOSURE TAPER TO WORK SPACE, OR ANY OBSTRUCTION PRIOR TO WORK SPACE.

## TRAFFIC CONTROL DEVICE LEGEND

- SIGN (FIXED OR PORTABLE)
- CHANNELIZING DEVICE (SEE STD DWG TC 2A)
- DRUMS OR DIRECTIONAL INDICATOR BARRICADE
- FLAGGING STATION
- ARROW BOARD
- BARRIER
- DIRECTION OF TRAFFIC
- TYPE III BARRICADE
- DIRECTION OF WORK VEHICLE

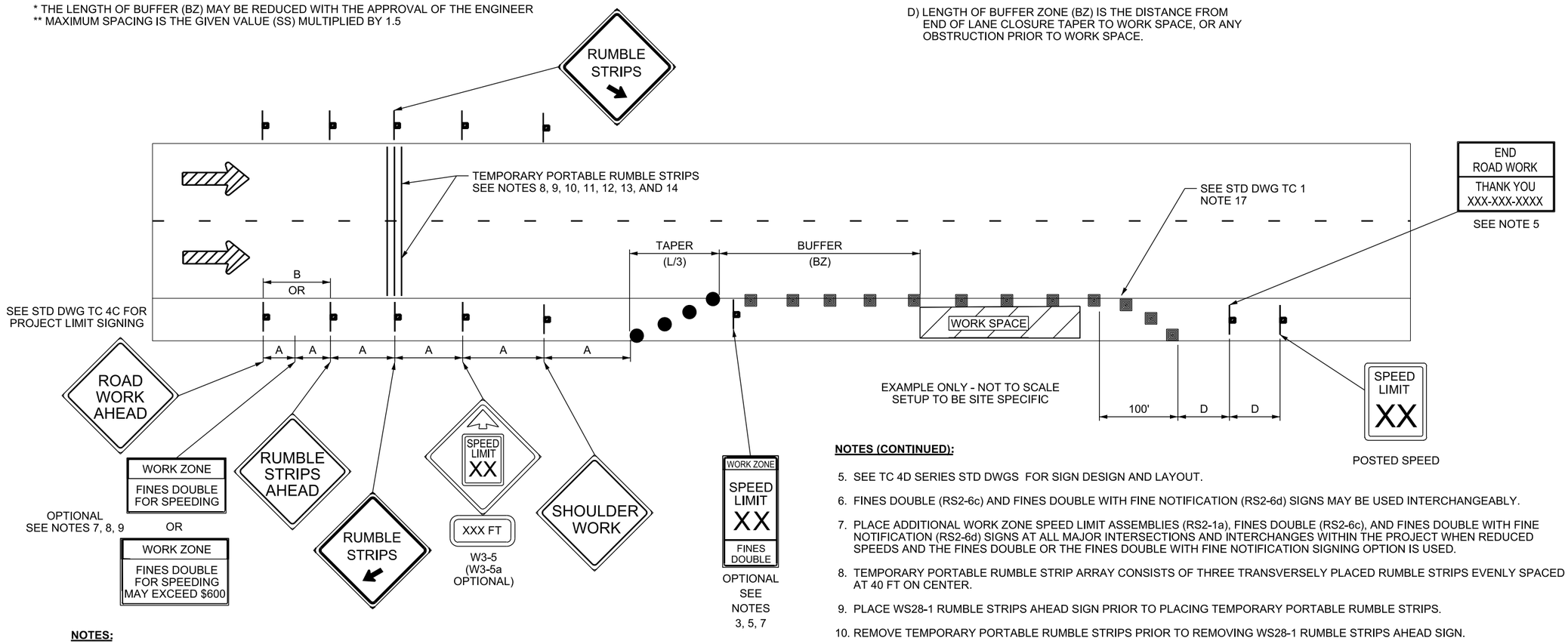


**NOTES:**

1. USE THE PRE-CONSTRUCTION POSTED SPEED LIMIT PRIOR TO WORK ZONE TO COMPUTE THE SIGN SPACING, TAPER LENGTH, BUFFER ZONE, AND WORK CLEAR ZONE DISTANCES. USE THE WORK ZONE REDUCED SPEED LIMIT TO DETERMINE THE TANGENT SPACING FOR CHANNELIZING DEVICES.
2. REMOVE OR COVER ALL WORK ZONE REDUCED SPEED LIMIT ASSEMBLIES (RS2-1a) AND THE WORK ZONE REDUCED SPEED LIMIT AHEAD (W3-5 SERIES) SIGNS WHEN NO ONE IS WORKING, EXCEPT AS APPROVED BY THE REGION TRAFFIC ENGINEER. DO NOT COVER PRE-CONSTRUCTION POSTED SPEED LIMIT ASSEMBLIES (RS2-1a).
3. ADDITIONAL SIGNS MAY BE USED IN THE WORK ZONE FOR SUPPLEMENTAL NOTIFICATION OF THE WORK ZONE SPEED LIMITS.
4. USE SUPPLEMENTAL LEFT SIDE SIGNING FOR HIGH-SPEED DIVIDED HIGHWAYS.

**NOTES (CONTINUED):**

5. SEE TC 4D SERIES STD DWGS FOR SIGN DESIGN AND LAYOUT.
6. FINES DOUBLE (RS2-6c) AND FINES DOUBLE WITH FINE NOTIFICATION (RS2-6d) SIGNS MAY BE USED INTERCHANGEABLY.
7. PLACE ADDITIONAL WORK ZONE SPEED LIMIT ASSEMBLIES (RS2-1a), FINES DOUBLE (RS2-6c), AND FINES DOUBLE WITH FINE NOTIFICATION (RS2-6d) SIGNS AT ALL MAJOR INTERSECTIONS AND INTERCHANGES WITHIN THE PROJECT WHEN REDUCED SPEEDS AND THE FINES DOUBLE OR THE FINES DOUBLE WITH FINE NOTIFICATION SIGNING OPTION IS USED.
8. TEMPORARY PORTABLE RUMBLE STRIP ARRAY CONSISTS OF THREE TRANSVERSELY PLACED RUMBLE STRIPS EVENLY SPACED AT 40 FT ON CENTER.
9. PLACE WS28-1 RUMBLE STRIPS AHEAD SIGN PRIOR TO PLACING TEMPORARY PORTABLE RUMBLE STRIPS.
10. REMOVE TEMPORARY PORTABLE RUMBLE STRIPS PRIOR TO REMOVING WS28-1 RUMBLE STRIPS AHEAD SIGN.
11. RESET THE TEMPORARY PORTABLE RUMBLE STRIPS AS NECESSARY TO MAINTAIN PROPER ALIGNMENT, SPACING, AND LOCATION.
12. DO NOT USE TEMPORARY PORTABLE RUMBLE STRIPS ON HORIZONTAL CURVES UNLESS APPROVED BY REGION TRAFFIC ENGINEER.
13. REFER TO SPECIAL PROVISION 01554M FOR MAINTENANCE OF TEMPORARY PORTABLE RUMBLE STRIPS.
14. DO NOT PLACE TEMPORARY PORTABLE RUMBLE STRIPS DURING SNOW EVENTS.
15. RELOCATE THE TEMPORARY PORTABLE RUMBLE STRIPS AND ASSOCIATED SIGNING WHEN VEHICLE QUEUES ARE EXPECTED OR OCCUR IN ADVANCE OF TEMPORARY PORTABLE RUMBLE STRIPS.

SUPPLEMENTAL DRAWING

REVISIONS

| NO. | DATE | APPR. | REMARKS |
|---|---|---|---|
| 1 | 6/28/18 | RT | REPLACED WS28-2 AND W16-7 ASSEMBLY WITH NEW WS28-2 SIGN. |

UTAH DEPARTMENT OF TRANSPORTATION
STANDARD DRAWINGS FOR ROAD AND BRIDGE CONSTRUCTION
SALT LAKE CITY, UTAH

RECOMMENDED FOR APPROVAL — JUNE 28, 2018 — DATE
CHAIRMAN STANDARDS COMMITTEE APPROVED — JUNE 28, 2018 — DATE
DEPUTY DIRECTOR

SHOULDER WORK ZONE
TEMPORARY PORTABLE
RUMBLE STRIPS
FREEWAY/DIVIDED
HIGHWAY

STANDARD DRAWING TITLE

STD. DWG. NO.
TC 4B4

DGN File: D:\StandardandSpecsSection\2017Section\All Sup Issues\Issue # 5 06-28-2018\Drawings\TC0484.dgn
09-JUL-2018

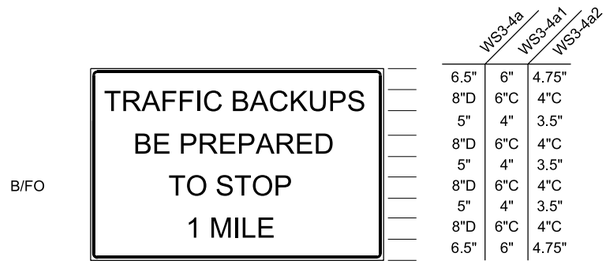


WS3-4a - 114 X 60 INCHES FREEWAY AND EXPRESSWAY
WS3-4a1 - 72 X 48 INCHES CONVENTIONAL 45 MPH AND GREATER
WS3-4a2 - 54 X 36 INCHES CONVENTIONAL 45 MPH AND LESS

**WS3-4a SERIES**

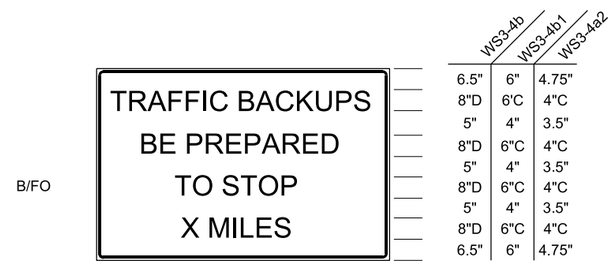


WS3-4b - 114 X 60 INCHES FREEWAY AND EXPRESSWAY
WS3-4b1 - 72 X 48 INCHES CONVENTIONAL 45 MPH AND GREATER
WS3-4b2 - 54 X 36 INCHES CONVENTIONAL 45 MPH AND LESS

**WS3-4b SERIES**

## WS3-4 SERIES TRAFFIC BACKUP SIGNS

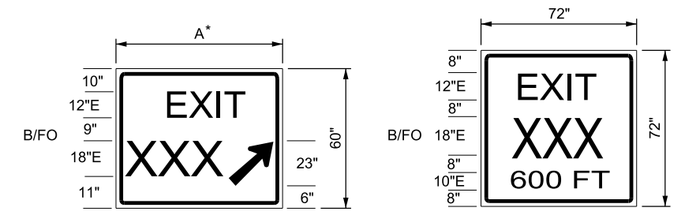


**E5-1aW SERIES** **ES5-1dW SERIES**

* SEE TABLE 1 FOR WIDTH

## ES5-1W SERIES WORK ZONE EXIT SIGNS

XXX EXIT NUMBER

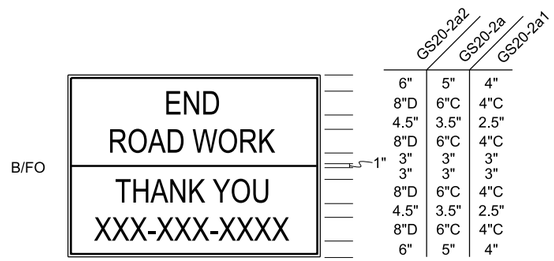


GS20-2a2 - 84 X 60 INCHES OVERSIZED
GS20-2a - 60 X 48 INCHES FREEWAY AND EXPRESSWAY
GS20-2a1 - 42 X 36 INCHES CONVENTIONAL
XXX CONTRACTOR'S PHONE NUMBER
NO INTERNET OR EMAIL ADDRESSES

## GS20-2a SERIES END ROAD WORK INFORMATION SIGNS

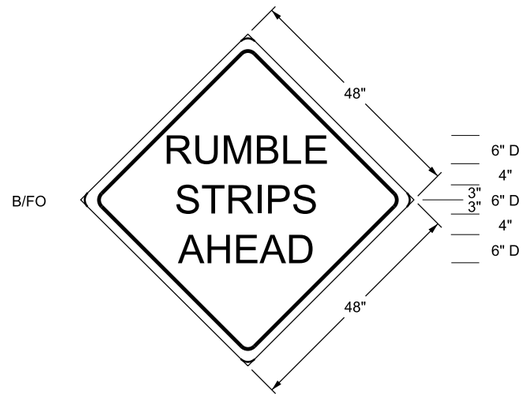


## WS28-1 RUMBLE STRIPS AHEAD SIGN

| SIGN WIDTH | | |
|---|---|---|
| | NUMBER OF DIGITS | A |
| ES5-1aW1 | X | 78 INCHES |
| ES5-1aW2 | XX | 78 INCHES |
| ES5-1aW3 | XXX | 96 INCHES |

## ES5-1aW SERIES WORK ZONE EXIT GORE SIGNS TABLE 1

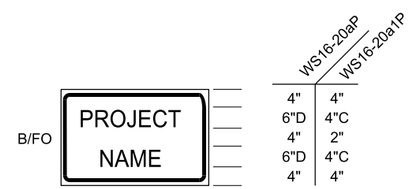


WS16-20aP - 60 X 24 INCHES FREEWAY AND EXPRESSWAY
WS16-20a1P - 36 X 18 INCHES CONVENTIONAL

## WS16-20aP SERIES WORK ZONE ACCESS PROJECT IDENTIFIER PLAQUES

SEE NOTE 1

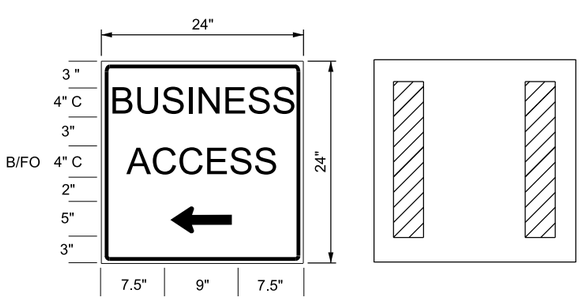


**FRONT**

USE BLACK LEGEND ON FLUORESCENT ORANGE RETROREFLECTIVE SHEETING.

**BACK**

PLACE TWO 4 X 18 INCHES FLUORESCENT ORANGE RETROREFLECTIVE STRIPS VERTICALLY ON THE SIGN BACK.

## GS20-5 SERIES BUSINESS ACCESS SIGNS

LEFT ARROW SHOWN

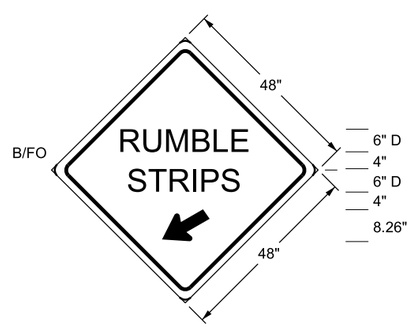


## RUMBLE STRIPS (WS28-2L) SIGN

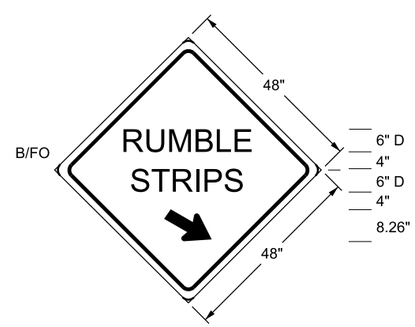


## RUMBLE STRIPS (WS28-2R) SIGN

**NOTES:**

1. USE PROJECT IDENTIFIER ONLY. DO NOT INCLUDE PROMOTIONAL OR OTHER INFORMATIONAL IDENTIFICATIONS OF PUBIC OFFICIALS, CONTRACTORS, ORGANIZATIONAL AFFILIATIONS, RELATED LOGOS AND SYMBOLS.
2. PLACE TWO FLUORESCENT ORANGE STRIPS OF RETROREFLECTIVE SHEETING, 4 x 24 INCHES, WITHIN 12 INCHES FROM THE RIGHT AND LEFT EDGES ON THE BACK OF SIGNS USED WITH PORTABLE SUPPORTS.

SUPPLEMENTAL DRAWING

REVISIONS

| NO. | DATE | APPR. | REMARKS |
|---|---|---|---|
| 1 | 6/28/18 | RT | REPLACED WS28-2 AND W16-7 ASSEMBLY WITH NEW WS28-2 SIGN. |

**UTAH DEPARTMENT OF TRANSPORTATION**
STANDARD DRAWINGS FOR ROAD AND BRIDGE CONSTRUCTION
SALT LAKE CITY, UTAH

RECOMMENDED FOR APPROVAL — JUNE 28, 2018 DATE
CHAIRMAN STANDARDS COMMITTEE APPROVED — JUNE 28, 2018 DATE
DEPUTY DIRECTOR

STANDARD DRAWING TITLE: WORK ZONE SPECIALTY SIGNS

STD. DWG. NO. TC 4D2

DGN File: Q:\StandardsandSpecsSection\2017Section\All Supp Issues\Issue # 5 06-28-2018\Drawings\TC0402.dgn
09-JUL-2018

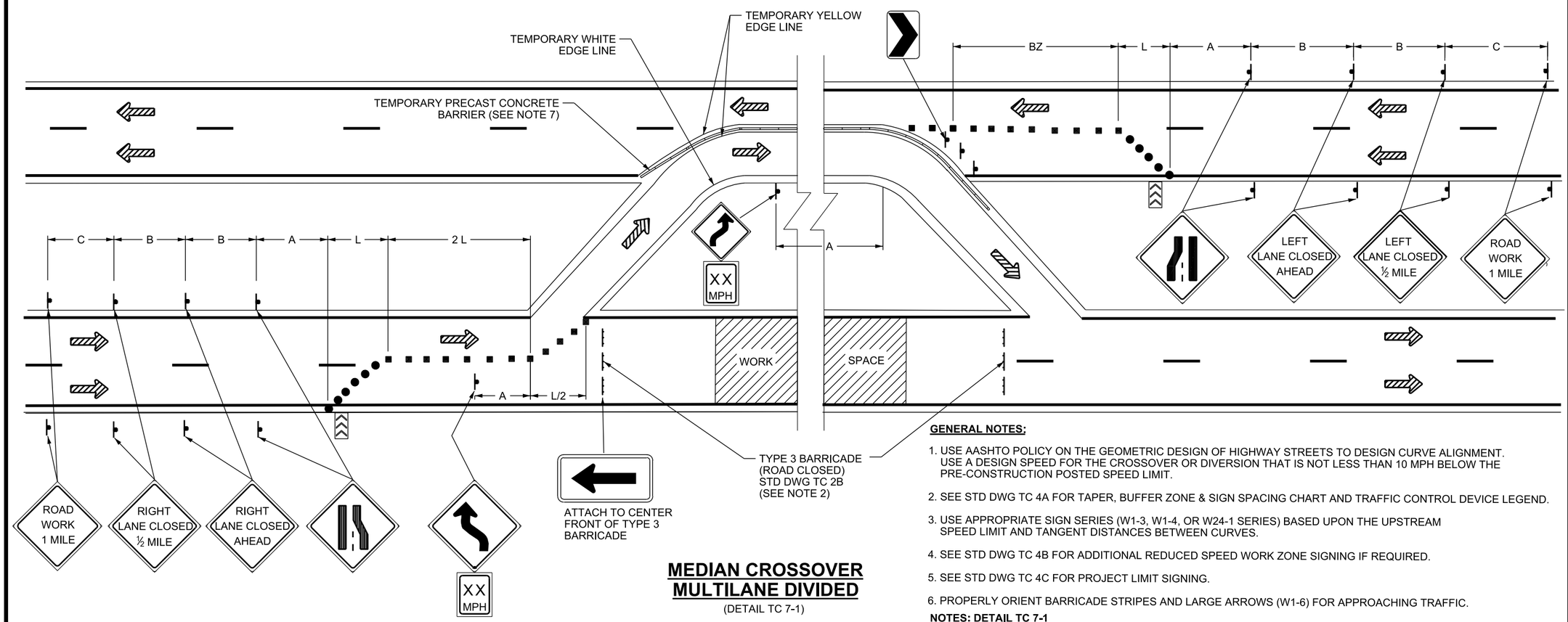


## MEDIAN CROSSOVER MULTILANE DIVIDED

(DETAIL TC 7-1)

**GENERAL NOTES:**

1. USE AASHTO POLICY ON THE GEOMETRIC DESIGN OF HIGHWAY STREETS TO DESIGN CURVE ALIGNMENT. USE A DESIGN SPEED FOR THE CROSSOVER OR DIVERSION THAT IS NOT LESS THAN 10 MPH BELOW THE PRE-CONSTRUCTION POSTED SPEED LIMIT.
2. SEE STD DWG TC 4A FOR TAPER, BUFFER ZONE & SIGN SPACING CHART AND TRAFFIC CONTROL DEVICE LEGEND.
3. USE APPROPRIATE SIGN SERIES (W1-3, W1-4, OR W24-1 SERIES) BASED UPON THE UPSTREAM SPEED LIMIT AND TANGENT DISTANCES BETWEEN CURVES.
4. SEE STD DWG TC 4B FOR ADDITIONAL REDUCED SPEED WORK ZONE SIGNING IF REQUIRED.
5. SEE STD DWG TC 4C FOR PROJECT LIMIT SIGNING.
6. PROPERLY ORIENT BARRICADE STRIPES AND LARGE ARROWS (W1-6) FOR APPROACHING TRAFFIC.

**NOTES: DETAIL TC 7-1**

7. SEE STD DWG TC 1 GENERAL NOTES 19 AND 20 FOR TEMPORARY PRECAST BARRIER REQUIREMENTS.

**NOTES: DETAIL TC 7-2**

8. USE CHANNELIZING DEVICES ON UNPAVED SURFACES.
9. PROVIDE A MINIMUM 10 FT TRAFFIC LANE IN EACH DIRECTION. USE A FLAGGING OPERATION AS ACCORDING TO STD DWG TC 14 IF THIS CANNOT BE DONE.
10. PLACE PASS WITH CARE (R4-2) SIGN ONLY IF PASSING IS ALLOWED DOWNSTREAM OF WORK ZONE

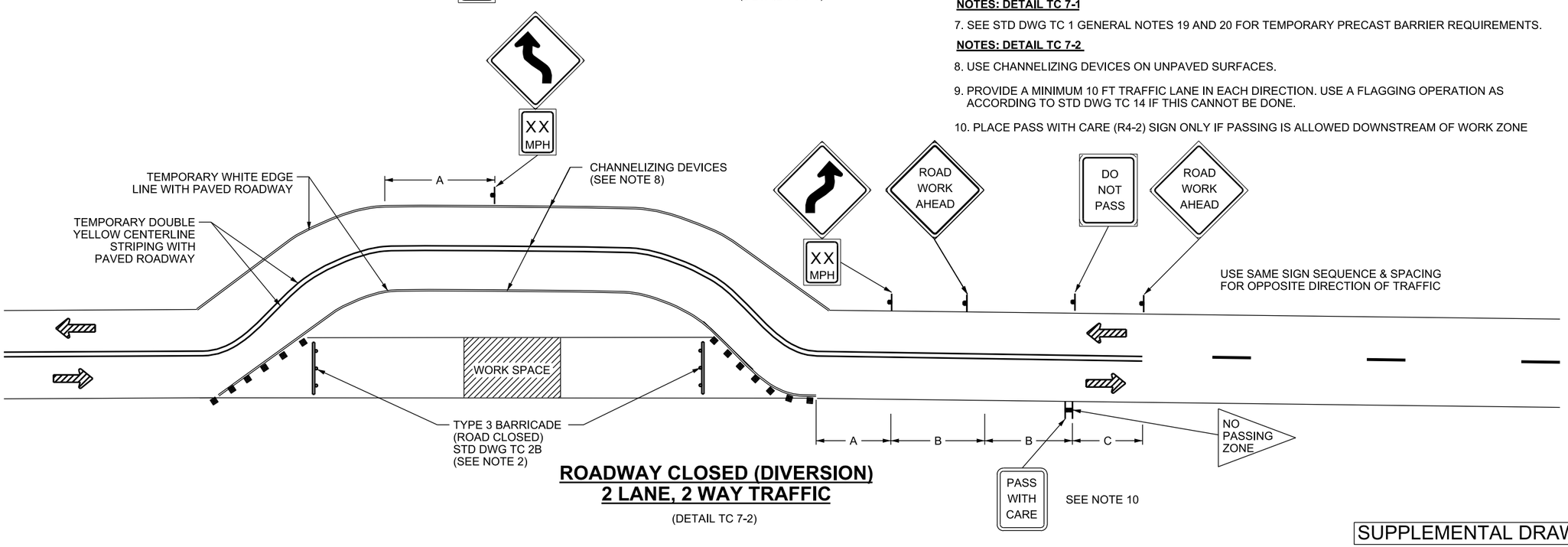


## ROADWAY CLOSED (DIVERSION) 2 LANE, 2 WAY TRAFFIC

(DETAIL TC 7-2)

SUPPLEMENTAL DRAWING

| NO. | DATE | APPR. | REMARKS |
|---|---|---|---|
| 1 | 6/28/18 | RT | UPDATED NOTE 7. |

REVISIONS

**UTAH DEPARTMENT OF TRANSPORTATION**
STANDARD DRAWINGS FOR ROAD AND BRIDGE CONSTRUCTION
SALT LAKE CITY, UTAH

RECOMMENDED FOR APPROVAL — JUNE 28, 2018 — DATE
CHAIRMAN STANDARDS COMMITTEE APPROVED — JUNE 28, 2018 — DATE
DEPUTY DIRECTOR

MEDIAN CROSSOVER AND 2-LANE, 2-WAY DIVERSION

STANDARD DRAWING TITLE

STD. DWG. NO.
TC 7

DGN File: Q:\StandardsandSpecsSection\2017Section\All Supp Issues\Issue # 5 06-28-2018\Drawings\TC07.dgn
09-JUL-2018

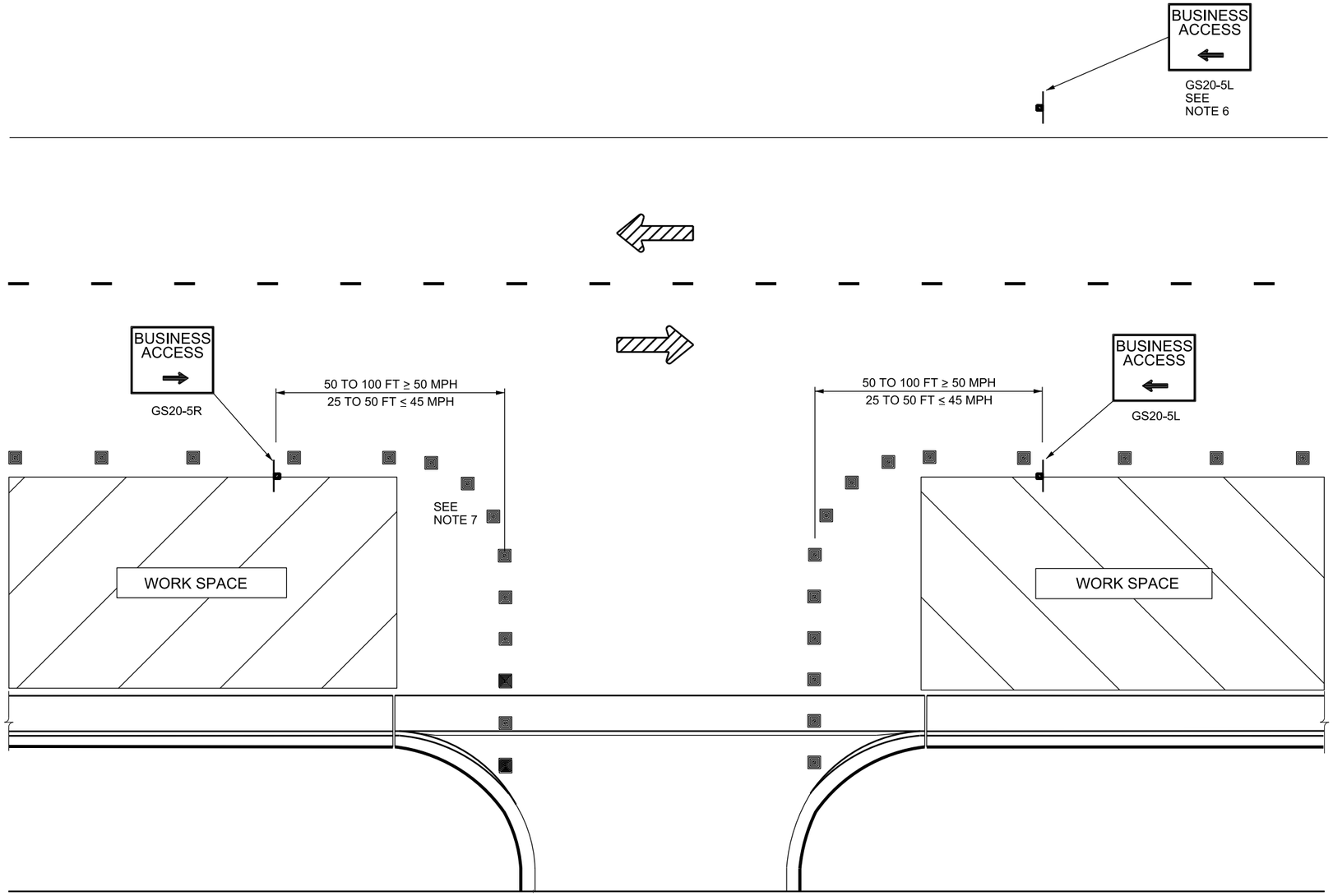


## TYPICAL BUSINESS ACCESS PLAN

EXAMPLE ONLY - NOT TO SCALE
SETUP TO BE SITE SPECIFIC

**NOTES:**

1. USE TO DEFINE BUSINESS ACCESS WITHIN WORK ZONES.
2. USE 5 FT MINIMUM MOUNTING HEIGHT.
3. USE JOINT ACCESS WHERE PRACTICAL.
4. CONSIDER USING DIFFERENT CHANNELIZING DEVICES TO HIGHLIGHT ACCESS (USE VERTICAL PANELS ALONG ROADWAY AND BARRELS WITHIN ACCESS LIMITS, FOR EXAMPLE).
5. REFER TO STD DWG TC 4A FOR TRAFFIC CONTROL DEVICE LEGEND.
6. CONSIDER USE OF RIGHT SIDE GS20-5 SIGN WHEN REQUIRED BUSINESS ACCESS SIGN IS OBSCURED BY WORK ZONE ACTIVITIES OR OPPOSING TRAFFIC.
7. USE 10 FT MAXIMUM SPACING BETWEEN DEVICES IN DRIVEWAY.
8. REFER TO TC 4D SERIES STD DWGS FOR DESIGN OF GS20-5 BUSINESS ACCESS SIGN.
9. DO NOT PLACE BUSINESS NAME, LOGO OR OTHER ADVERTISEMENT ON OR UNDER GS20-5 SIGNS. SEE STD DWG TC 1 NOTE 25.

SUPPLEMENTAL DRAWING

REVISIONS

| NO. | DATE | APPR. | REMARKS |
|---|---|---|---|
| 1 | 6/28/18 | RT | UPDATED NOTE 9. |

**UTAH DEPARTMENT OF TRANSPORTATION**
STANDARD DRAWINGS FOR ROAD AND BRIDGE CONSTRUCTION
SALT LAKE CITY, UTAH

RECOMMENDED FOR APPROVAL — JUNE 28, 2018 DATE
CHAIRMAN STANDARDS COMMITTEE APPROVED — JUNE 28, 2018 DATE
DEPUTY DIRECTOR

WORK ZONE
BUSINESS ACCESS
SIGNING

STANDARD DRAWING TITLE

STD. DWG. NO.
TC 9

09-JUL-2018 DGN File: O:\StandardsandSpecsSection\2017Section\All Supp Issues\Issue # 5 06-28-2018\Drawings\TC09.dgn

# Supplemental Issue, August 30, 2018

## Supplemental Specifications

| | |
|---|---|
| 02056M | Embankment, Borrow, and Backfill |
| 02645M | Precast Concrete Box and Three-Sided Culvert Structures |
| 03934M | Structural Pothole Patching |

## Supplemental Drawings

| | |
|---|---|
| AT 03 | Ramp Meter Detection Layout and Cabinet Placement |
| BA 1C | Concrete Barrier Shoulder Installation |
| BA 4C1A | Midwest 31 Inch W-Beam Guardrail Anchor Type 1 |
| BA 4C1B | Midwest 31 Inch W-Beam Guardrail Anchor Type 1 |
| BA 4G2 | Curved Guardrail Anchor |
| BA 4J1 | Midwest 31 Inch W-Beam Guardrail Typicals Divided Roadways |
| BA 4J2 | Midwest 31 Inch W-Beam Guardrail Typical Multilane Arterial |
| BA 4J3 | Midwest 31 Inch W-Beam Guardrail Typical 2 Lane 2 Way |
| BA 5B2 | Cable Barrier Placement |
| BA 5D1 | Median Cable Barrier W-Beam Double Sided and Freeway Crossover Anchor System (Type C; C.A.T.) |
| BA 5D2 | Median Cable Barrier W-Beam Double Sided and Freeway Crossover Anchor System (Type C; FLEAT-MT) |
| CC 4A | Details for Placement Crash Cushions Type A, B, and D |
| CC 4B | Crash Cushion and Mounted on Median Island |
| CC 4C | Crash Cushion Split Median Island W/RR Crossing |
| CC 5A | Grading and Placement Details Crash Cushion Type C C.A.T. |
| CC 5B | Grading and Placement Details Crash Cushion Type C FLEAT-MT |
| CC 7A | Grading and Installation Details End Treatment Type F Quad Trend 350 |
| CC 7B | Grading and Installation Details End Treatment Type F BEAT-SSCC |
| CC 8A | Grading and Installation Details Softstop End Treatment Type G (MASH) |
| CC 8B | Grading and Installation Details MSKT-SP-MGS End Treatment Type G (MASH) |
| DB 1G | Solid Cover for STD DWG DB 1 |
| DG 04 | Minimum Fill Height and Spacing for Drainage Pipe |
| DG 06 | Steel Safety End Sections |
| DD 1 | Superelevation, Widening and Edge Detail **(DELETION)** |
| DD 2 | Surface Ditch and Benched Slope Details **(DELETION)** |
| DD 3 | Geometric Designs for Freeways **(DELETION)** |
| DD 4 | Entrance Ramps **(DELETION)** |
| DD 5 | Exit Ramps **(DELETION)** |
| DD 6 | Intersection Geometrics **(DELETION)** |

| | |
|---|---|
| DD 7 | Freeway Crossover **(DELETION)** |
| DD 8 | Structural Geometric Design Standards for Clearances **(DELETION)** |
| DD 9 | Structural Geometric Design Standards **(DELETION)** |
| DD 10 | Divided Arterials **(DELETION)** |
| DD 11 | Arterial And Collector Roads **(DELETION)** |
| DD 12 | Local, Frontage, and Access Roads **(DELETION)** |
| DD 13 | Two-Lane Intersection (1 of 2) **(DELETION)** |
| DD 14 | Two-Lane Intersection (2 of 2) **(DELETION)** |
| DD 15 | Embankment For Bridge Placement **(DELETION)** |
| DD 16 | Utility Location Requirements **(DELETION)** |
| DD 17 | Clear Zone and Lateral Offset to Obstruction **(DELETION)** |
| DD 18 | Marked Pedestrian Crosswalk Enhancement Flowchart **(DELETION)** |
| GF 02 | Perpendicular Rectangular Grate and Frame |
| GF 07 | Manhole Cover and Frame |
| GW 8 | Surface Ditch, Benched Slope And Embankment for Bridge Placement Details **(NEW DRAWING)** |
| PA 7 | Marked Pedestrian Crosswalk Enhancement Flowchart **(NEW DRAWING)** |
| PV 11 | Edge Detail **(NEW DRAWING)** |
| RR 8 | Raised Island Placement At Railroad Crossings |
| SL 6B | Pedestrian Signal Crosswalk |
| SL 6C | Pedestrian Hybrid Beacon Crosswalk (HAWK) |
| SL 6D | Overhead Flashing Beacon at an Intersection Crosswalk |
| SL 6E | Post-Mounted Flashing Beacon at an Intersection Crosswalk |
| SL 6F | Overhead Flashing Beacon at Midblock Crosswalk |
| SL 6G | Post-Mounted Flashing Beacon at a Midblock Crosswalk |
| ST 1 | Typical Pavement Markings No Pass Zone and Lane Reduction |
| ST 4 | Entrance Ramp Pavement Markings |
| ST 5 | Exit Ramp Pavement Markings |
| ST 6 | Intersection Pavement Markings |
| ST 7 | Crosswalks, Parking, and Intersection Approaches |
| ST 10 | Bicycle Lane Pavement Markings (Sheet 1 of 2) |
| ST 11 | Bicycle Lane Pavement Markings (Sheet 2 of 2) |
| ST 13 | Two-Lane Intersection Pavement Markings (Sheet 1 of 2) |
| ST 14 | Two-Lane Intersection Pavement Markings (Sheet 2 of 2) |
| ST 16 | Preferential Lane Access Opening Details |

**Supplemental Specification**
**2017 Standard Specification Book**

**SECTION 02056M**

# EMBANKMENT, BORROW, AND BACKFILL

Delete Paragraph 3.5 A and replace with the following:

A. Construct bridge approach embankments from the existing ground up with the specified material to the limits defined in this Section and according to GW Series Standard Drawings.
   1. Approach Embankments
      a. Place embankment beneath the bridge except riprap or other described materials used for MSE walls.
      b. Place embankment from the bridge abutment centerline station to a point measured at least 150 ft away from the abutment along the approach roadway centerline and on the inside of abutments.
      c. Use the described material throughout the length of the walls where retaining walls are located beyond this delineation.
   2. Intersecting Roadway Embankments
      a. Place embankment from approximate edge of approach roadway at least 60 ft along intersecting roadway centerline.
   3. Adjoining Embankments
      a. Place embankment at least 10 ft outward from edge of approach roadway pavement when adjoining embankment is not an approach embankment.

**Supplemental Specification**
**2017 Standard Specification Book**

**SECTION 02645M**

# PRECAST CONCRETE BOX AND THREE-SIDED CULVERT STRUCTURES

**Delete Paragraph 2.1 A and replace with the following:**

A. Wet Cast Concrete
   1. Concrete Class AAA(AE) according to Section 03055.
      a. 28-day minimum compressive strength of 5,000 psi.

**Supplemental Specification**
**2017 Standard Specification Book**

**SECTION 03934M**

# STRUCTURAL POTHOLE PATCHING

**Delete paragraph 1.5 B and replace with the following:**

B. Structural Pothole Patching Documentation for information
   1. Document the size, location, and repair material used in structural pothole repair areas.
   2. Use the "Structural Pothole Patching As-Built" template found at the Department's website for each bridge.
      a. Refer to http://www.udot.utah.gov/go/standardsreferences.
      b. Submit in electronic format.

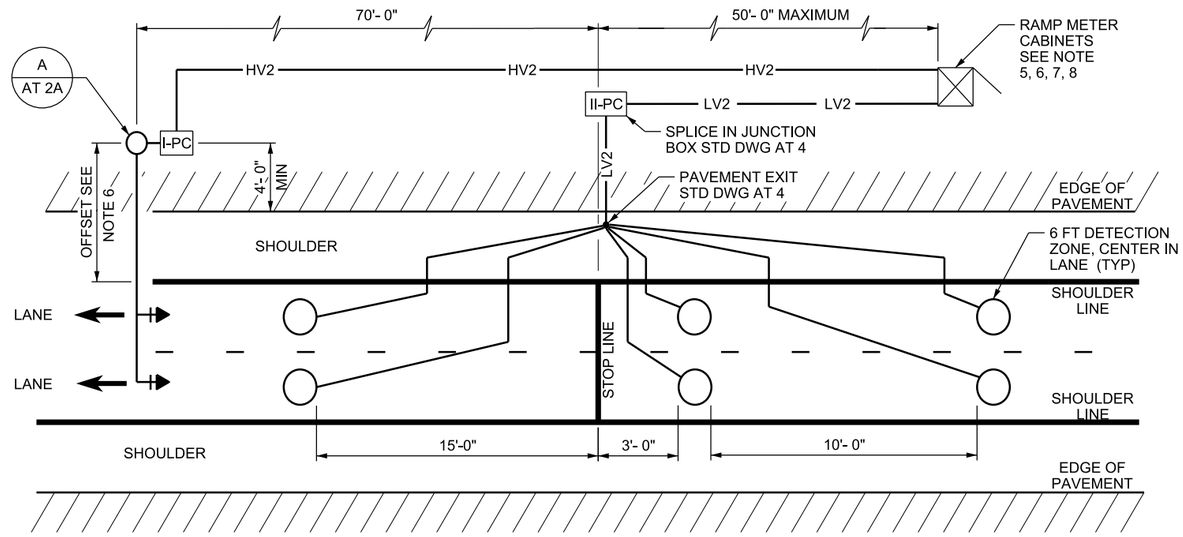


## (A) TWO LANE RAMP METER DETECTION ZONE LAYOUT DETAIL

(NOT TO SCALE)

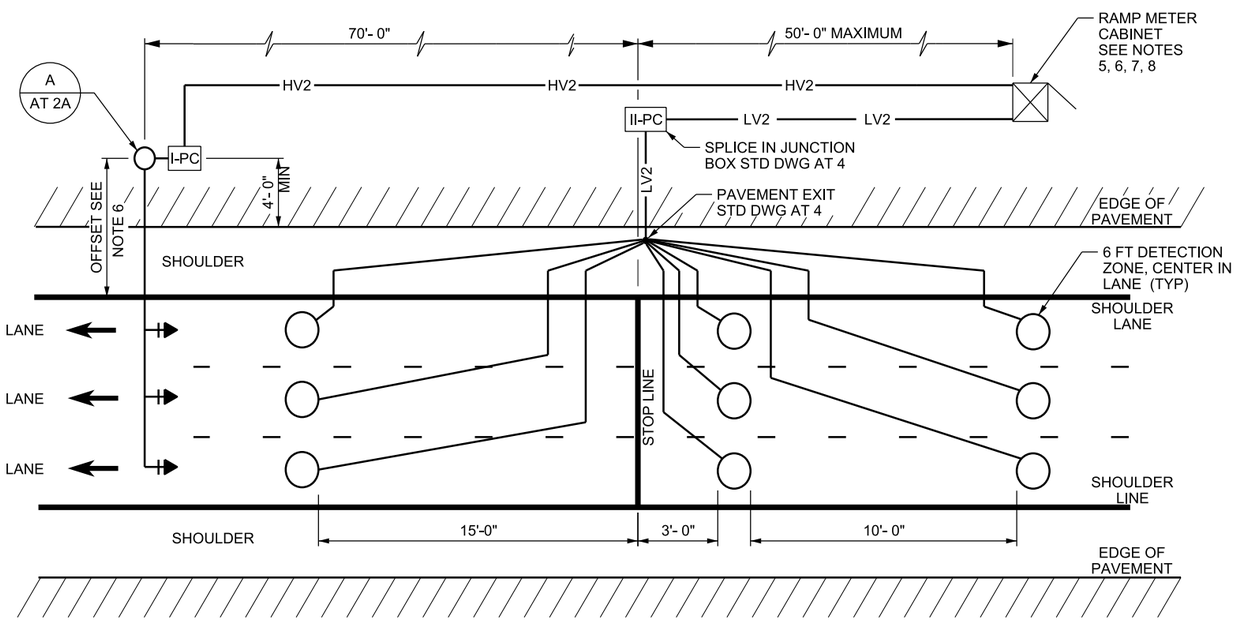


## (B) THREE LANE RAMP METER DETECTION ZONE LAYOUT DETAIL

(NOT TO SCALE)

**NOTES:**

1. PLACE JUNCTION BOXES ACCORDING TO STD DWG AT 7A. REFER TO STD DWG AT 4 FOR DETECTION.
2. USE PREFORMED LOOPS UNDER NEW PAVEMENT. PREFORMED LOOPS ARE TO BE PLACED PRIOR TO PAVING. SAW CUTTING NEW PAVEMENT WILL NOT BE PERMITTED.
3. TAG EACH LOOP WIRE IN EACH JUNCTION BOX, BEGINNING WITH FIRST LOOP IN LANE CLOSEST TO LEFT SHOULDER.
4. SEE STD DWG AT 5 FOR DETECTOR NUMBERING SCHEME.
5. USE THE AASHTO ROADSIDE DESIGN GUIDE AND THE UDOT ROADWAY DESIGN MANUAL FOR CLEAR ZONE REQUIREMENTS. CLEAR ZONE MAY EXTEND INTO CUT OR FILL SLOPES.
6. PLACE RAMP METER MAST ARM ASSEMBLY AND CABINET A MINIMUM OF 1.2 TIMES THE AASHTO CLEAR ZONE DISTANCE AWAY FROM THE TRAVELED WAY, OR SHIELD ACCORDING TO THE AASHTO ROADSIDE DESIGN GUIDE.
7. PLACE CABINET ON RIGHT SIDE OF TRAFFIC UNLESS SPACE IS UNAVAILABLE. CABINET ON LEFT SIDE MUST MEET CLEAR ZONE REQUIREMENTS FOR MAINLINE AND RAMP.
8. ORIENT CABINET SO THAT ELECTRONICS AND SIGNAL HEAD CAN BE VIEWED AT THE SAME TIME.
9. BARRIER BREAK FOR CABINET ACCESS REQUIRED, CONSTRUCT ACCORDING TO THE PLAN.
10. ENFORCEMENT PULL OUT REQUIRED, CONSTRUCT ACCORDING TO THE PLAN.
11. SEE PLAN SHEETS FOR DETECTOR LOOP LOCATION. ADJUST THE LOOP PLACEMENT FORWARD OR BACKWARD IN THE SHORTEST DIRECTION FROM THE OPTIMUM POSITION IF A DETECTOR LOOP LOCATION IS IN CONFLICT WITH A MANHOLE, WATER VALVE, OR PAVEMENT EXPANSION JOINT.

SUPPLEMENTAL DRAWING

| NO. | DATE | APPR. | REMARKS |
|---|---|---|---|
| | | | |

**UTAH DEPARTMENT OF TRANSPORTATION**
STANDARD DRAWINGS FOR ROAD AND BRIDGE CONSTRUCTION
SALT LAKE CITY, UTAH

RECOMMENDED FOR APPROVAL — AUG. 30, 2018 DATE
CHAIRMAN STANDARDS COMMITTEE
APPROVED — AUG. 30, 2018 DATE
DEPUTY DIRECTOR

RAMP METER DETECTION LAYOUT AND CABINET PLACEMENT
STANDARD DRAWING TITLE

STD. DWG. NO.
AT 3

DGN File:Q:\Standardsand\SpecsSection\2017Section\All Supp Issues\Issue # 6 08-30-2018\Drawings\AT03.dgn
12-SEP-2018

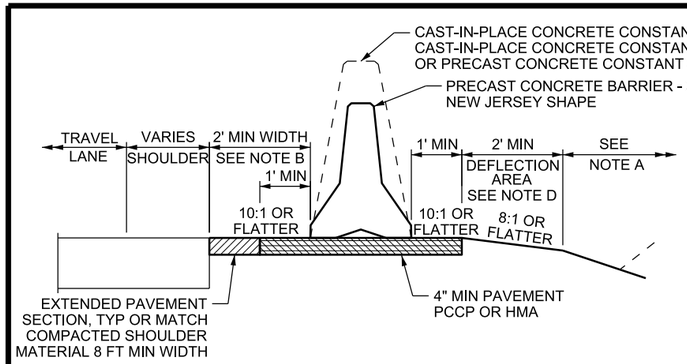


## PLACEMENT WITH DEFLECTION AREA

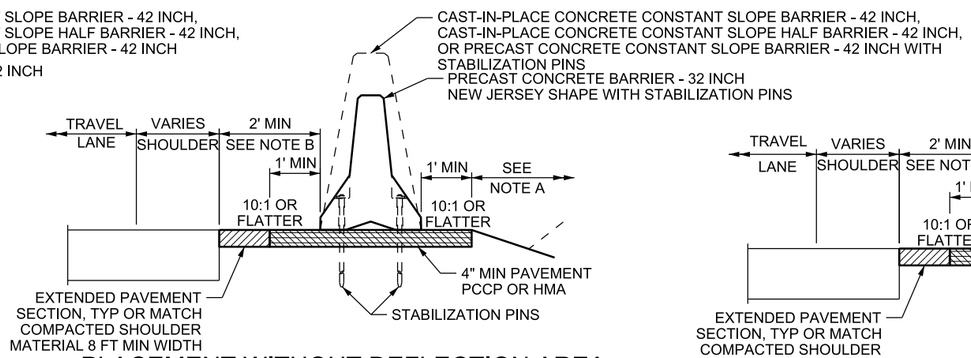


## PLACEMENT WITHOUT DEFLECTION AREA

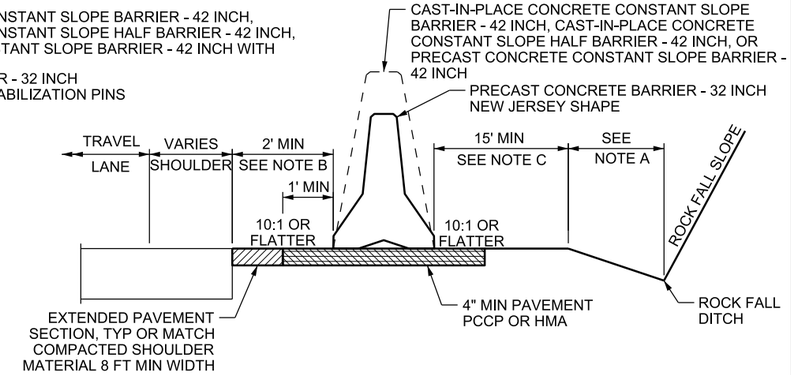


## PLACEMENT WITH ROCK FALL CONSIDERATIONS

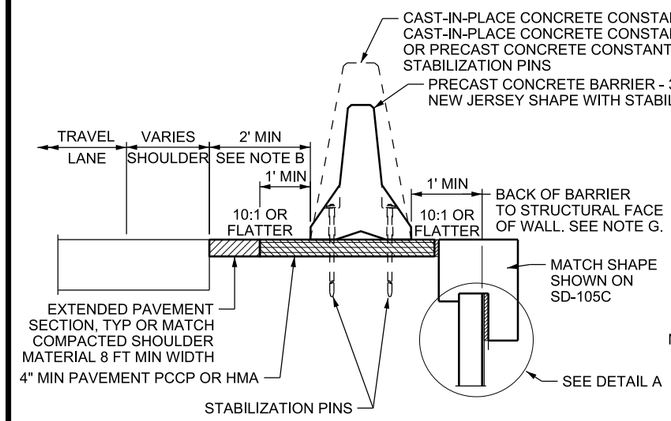


## PLACEMENT WITH SINGLE STAGE MSE OR RETAINING WALL

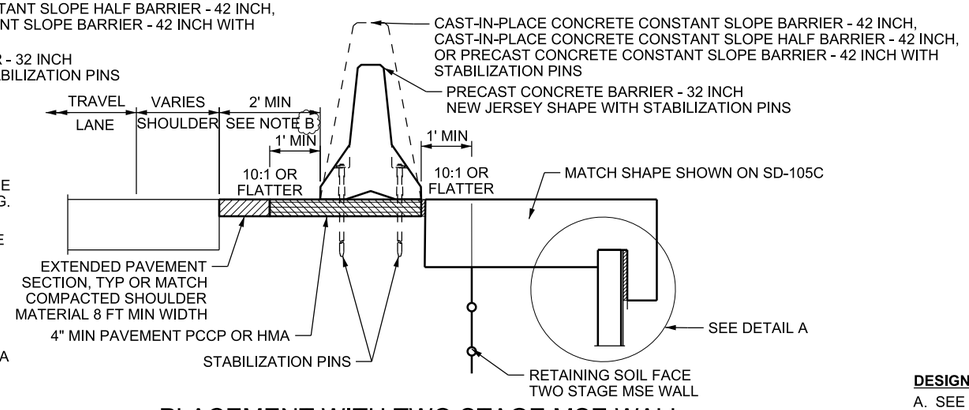


## PLACEMENT WITH TWO STAGE MSE WALL

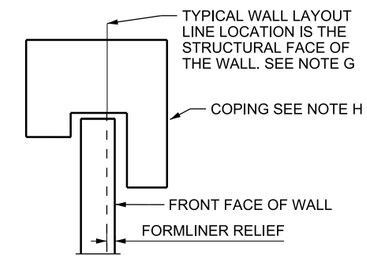


## DETAIL A

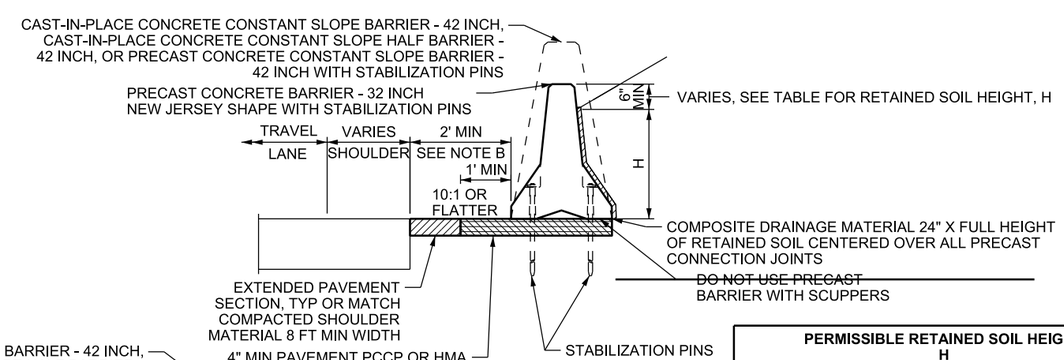


## RETAINING BARRIER

ENGINEER'S APPROVAL REQUIRED WITH VERIFICATION BY THE REGION PRECONSTRUCTION ENGINEER

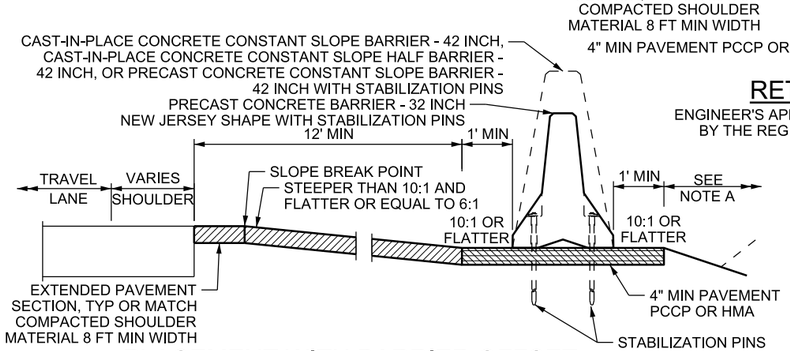


## PLACEMENT WITH BARRIER OFFSET

| PERMISSIBLE RETAINED SOIL HEIGHT H | | |
|---|---|---|
| BARRIER TYPE | BACKSLOPE | |
| | 2:1 OR FLATTER | LEVEL WITH LL SURCHARGE * |
| PRECAST CONCRETE BARRIER - 32 INCH NEW JERSEY SHAPE | 26" | 13" |
| CAST-IN-PLACE CONCRETE CONSTANT SLOPE BARRIER - 42 INCH OR PRECAST CONCRETE CONSTANT SLOPE BARRIER - 42 INCH | 35" | 19" |
| CAST-IN-PLACE CONCRETE CONSTANT SLOPE HALF BARRIER - 42 INCH | 29" | 15" |

*ACCOUNTS FOR 2 FT OF EQUIVALENT SOIL FOR LIVE LOAD SURCHARGE.

**DESIGN-ONLY NOTES:**

A. SEE THE UDOT ROADWAY DESIGN MANUAL FOR REQUIREMENTS.
B. THE 2 FT MIN BARRIER OFFSET IS OPTIONAL WHEN ROADWAY DESIGN REQUIRES A 12 FT OR WIDER EFFECTIVE SHOULDER.
C. ESTABLISH A 15 FT MAINTENANCE AREA 10:1 OR FLATTER ABOVE ROCK FALL DITCH.
D. DEFLECTION AREA NOT REQUIRED FOR CAST-IN-PLACE BARRIER.
E. CAST-IN-PLACE CONCRETE CONSTANT SLOPE BARRIER - 42 INCH, APPROACH END SECTION, 54 INCH APPROACH END, OR PRECAST CONCRETE CONSTANT SLOPE BARRIER 42 INCH 32 INCH NEW JERSEY SHAPE TRANSITION REQUIRED ON 42 INCH BARRIER IF USING A CRASH CUSHION OR GUARDRAIL TRANSITION.
F. SELECT THE APPROPRIATE END TREATMENT OR CRASH CUSHION FROM THE GUIDELINES FOR CRASH CUSHION AND BARRIER END TREATMENTS. USE AN END TREATMENT WHEN TRAFFIC HAS LESS THAN THE MAXIMUM REQUIRED AASHTO CLEAR ZONE.
G. STRUCTURAL FACE OF WALL IS THE FRONT FACE MINUS THE FORMLINER RELIEF. THE STRUCTURAL FACE OF THE SOIL NAIL WALL IS THE FRONT FACE INTEGRAL WITH THE SOIL NAIL WALL ANCHORS MINUS ANY FORMLINER RELIEF. WHEN SOIL NAIL WALLS ARE FACED WITH PRECAST PANELS THE STRUCTURAL FACE IS THE PRECAST PANEL SIDE OF THE SOIL RETAINING ELEMENTS INTEGRAL WITH THE SOIL NAILS.
H. COPING IS NOT REQUIRED ON CAST-IN-PLACE WALLS OR CAST-IN-PLACE WALL FACING

**NOTES**

1. PIN ALL PRECAST BARRIER SECTIONS TOGETHER AT CONNECTION LOOPS. PULL BARRIER TIGHT AFTER INSTALLING CONNECTION PIN.
2. P1 BARS IN CAST-IN-PLACE CONCRETE BARRIER ARE REQUIRED IN ALL APPLICATIONS. SEE APPLICABLE CAST-IN-PLACE CONCRETE BARRIER DRAWINGS FOR REINFORCING STEEL REQUIREMENTS.
3. TEMPORARY WORK ZONE APPLICATIONS:
   - 3A. STABILIZATION PINS ARE NOT REQUIRED WHEN 1 FT OR MORE IS PROVIDED BEYOND THE BARRIER.
   - 3B. STABILIZATION PINS ARE REQUIRED WHEN SLOPE BEHIND THE 1 FT DISTANCE BEYOND THE BARRIER IS STEEPER THAN 2:1.
   - 3C. APPROVAL FROM THE REGION TRAFFIC ENGINEER IS REQUIRED TO USE STABILIZATION PINS IN LIEU OF THE 1 FT DISTANCE BEHIND THE BARRIER.
   - 3D. DO NOT PLACE STABILIZATION PINS IN NEW ROADWAY SURFACE FOR TEMPORARY BARRIER.
   - 3E. INSTALL APPROVED CRASH CUSHION OR END TREATMENT ON APPROACH ENDS. SEE GUIDELINES FOR CRASH CUSHION AND END TREATMENTS, WORK ZONE DEVICES.

SUPPLEMENTAL DRAWING

REVISIONS

| NO. | DATE | APPR. | REMARKS |
|---|---|---|---|
| | | | |

UTAH DEPARTMENT OF TRANSPORTATION
STANDARD DRAWINGS FOR ROAD AND BRIDGE CONSTRUCTION
SALT LAKE CITY, UTAH

RECOMMENDED FOR APPROVAL — AUG 30, 2018 DATE
CHAIRMAN STANDARDS COMMITTEE APPROVED — AUG 30, 2018 DATE
DEPUTY DIRECTOR

STANDARD DRAWING TITLE: CONCRETE BARRIER SHOULDER INSTALLATION

STD. DWG. NO. BA 1C

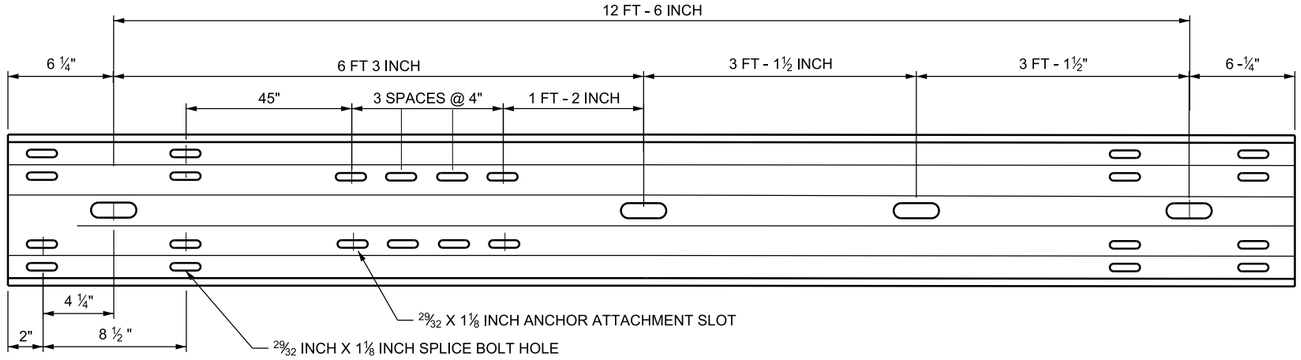


## RAIL ELEMENT

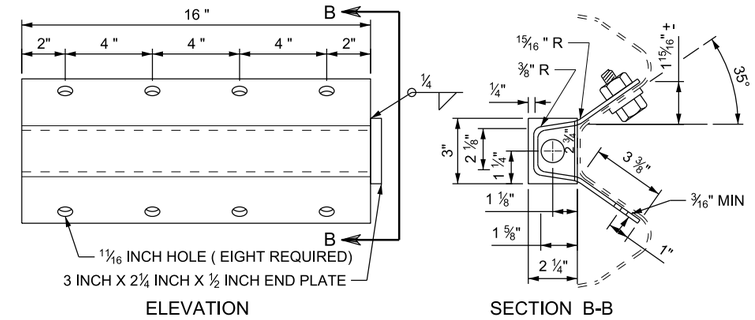


## ANCHOR BRACKET (FPA01)

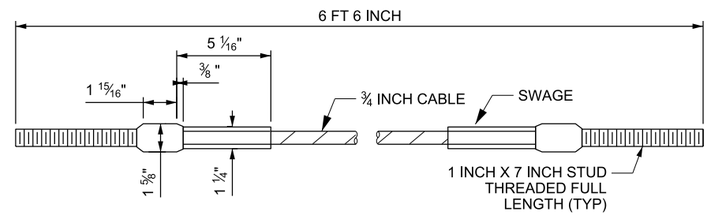


## BCT CABLE ANCHOR ASSEMBLY (FCA01)

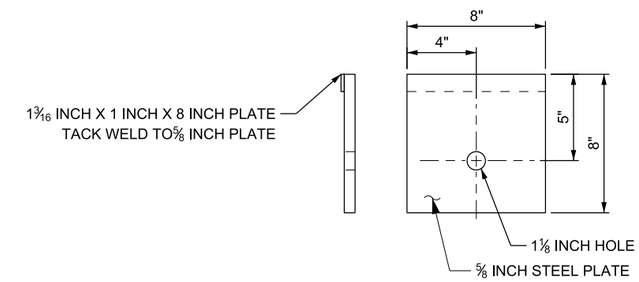


NOTE:
INSTALL BEARING PLATE WITH
5 INCH PORTION UP. SECURE PLATE
TO POST USING TWO NAILS AT
TOP OF PLATE TO PREVENT ROTATION.

## BEARING PLATE (FPB01)

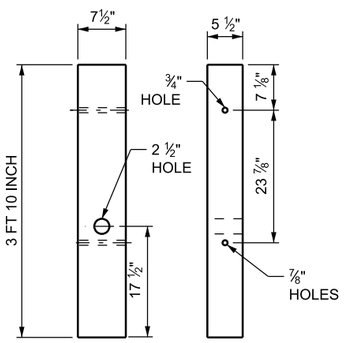


## WOOD BREAKAWAY POST (PDF01)

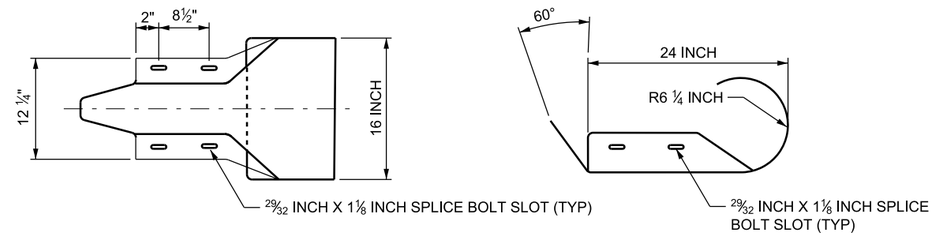


## END SECTION (ROUNDED)(RWE03A)

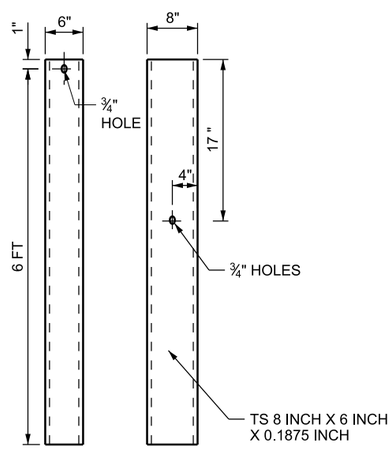


## FOUNDATION TUBE (PTE06)

SEE NOTE 1

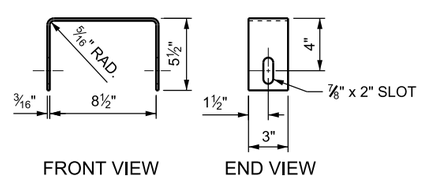


## YOKE DETAILS

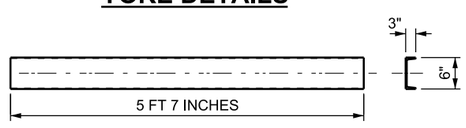


## STRUT DETAILS

6"x3" 10 GAUGE
SEE NOTE 2

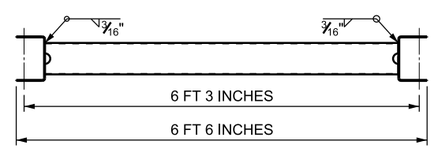


## STRUT AND YOKE ASSEMBLY

SEE NOTE 2

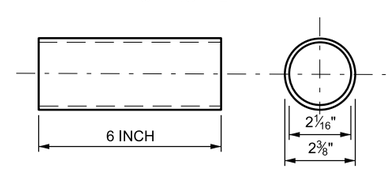


## BREAKAWAY TERMINAL POST SLEEVE (FMM02)

**DESIGN-ONLY NOTES**

A. DO NOT USE ON APPROACH END.
B. USE ON BARRIER TRAILING END ON DIVIDED ROADWAYS WITH A POSITIVE SEPARATION OR MEDIAN WIDTH GREATER THAN OR EQUAL TO 36 FT MEASURED FROM EDGE OF TRAVEL LANE TO EDGE OF TRAVEL LANE AND BARRIER END IS OUTSIDE THE MAXIMUM REQUIRED CLEAR ZONE AS DEFINED IN THE UDOT ROADWAY DESIGN MANUAL AND THE AASHTO ROADSIDE DESIGN GUIDE.

**NOTES:**

1. MANUFACTURE ACCORDING TO AASHTO GUIDE TO STANDARDIZED HIGHWAY BARRIER HARDWARE. NUMBER IN PARENTHESIS IS GUIDE REFERENCE NUMBER.
2. MANUFACTURE STRUT AND YOLK ASSEMBLY TO MEET ASTM A36 STEEL GALVANIZED.
3. INSTALL SPLICE BOLTS ONLY WITHIN THE MID-SPAN SPLICE JOINT. DO NOT INSTALL CENTER BOLT.

SUPPLEMENTAL DRAWING

REVISIONS

| NO. | DATE | APPR. | REMARKS |
|---|---|---|---|
| 1 | 10/26/2017 | SDD | NEW DRAWING. |

UTAH DEPARTMENT OF TRANSPORTATION
STANDARD DRAWINGS FOR ROAD AND BRIDGE CONSTRUCTION
SALT LAKE CITY, UTAH

RECOMMENDED FOR APPROVAL — AUG 30, 2018 DATE
CHAIRMAN STANDARDS COMMITTEE APPROVED — AUG 30, 2018 DATE
DEPUTY DIRECTOR

MIDWEST 31 INCH W-BEAM GUARDRAIL ANCHOR TYPE 1
STANDARD DRAWING TITLE

STD. DWG. NO.
BA 4C1A

DGN File: Q:\StandardsandSpecs\Section\2017Section\All Supp Issues\Issue # 6 08-30-2018\Drawings\BA04C1A.dgn
12-SEP-2018

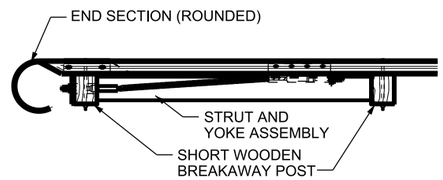


## PLAN

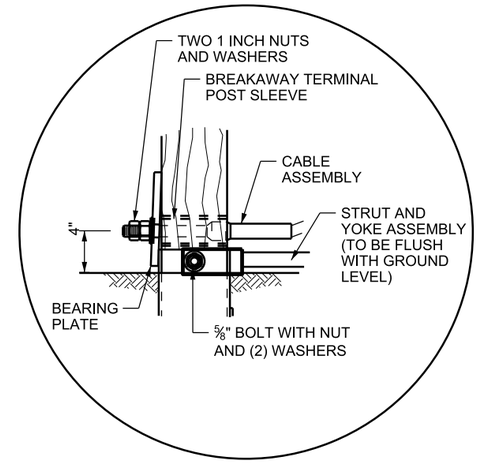


## DETAIL A

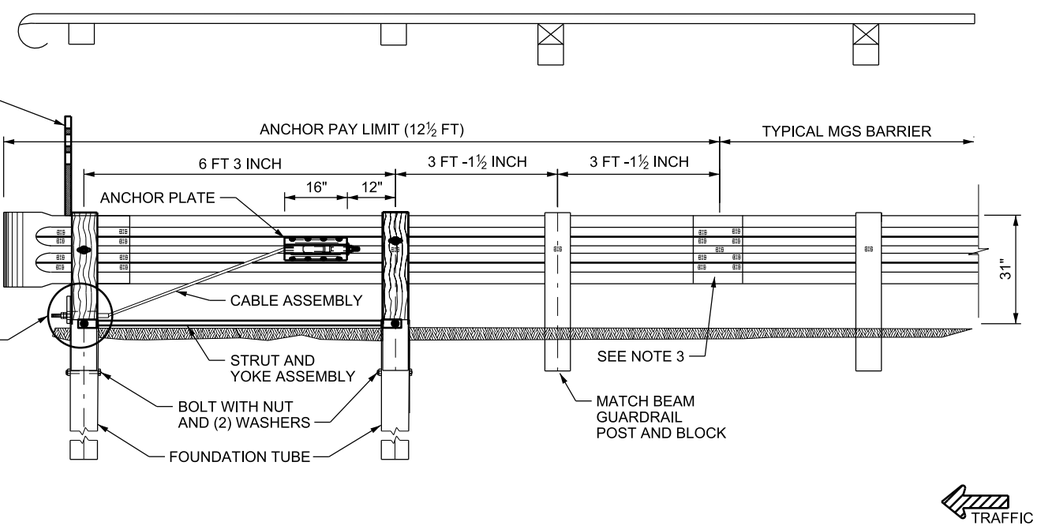


# TRAILING END W-BEAM ANCHOR INSTALLATION

**DESIGN-ONLY NOTES**

A. DO NOT USE ON APPROACH END.
B. USE ON BARRIER TRAILING END ON DIVIDED ROADWAYS WITH A POSITIVE SEPARATION OR MEDIAN WIDTH GREATER THAN OR EQUAL TO 36 FT MEASURED FROM EDGE OF TRAVEL LANE TO EDGE OF TRAVEL LANE AND BARRIER END IS OUTSIDE THE MAXIMUM REQUIRED CLEAR ZONE AS DEFINED IN THE UDOT ROADWAY DESIGN MANUAL AND THE AASHTO ROADSIDE DESIGN GUIDE.

**NOTES:**

1. MANUFACTURE ACCORDING TO AASHTO GUIDE TO STANDARDIZED HIGHWAY BARRIER HARDWARE. NUMBER IN PARENTHESIS IS GUIDE REFERENCE NUMBER.
2. INSTALL SPLICE BOLTS ONLY WITHIN THE MID-SPAN SPLICE JOINT. DO NOT INSTALL CENTER BOLT.

SUPPLEMENTAL DRAWING

REVISIONS

| NO. | DATE | APPR. | REMARKS |
|---|---|---|---|
| 1 | 10/26/2017 | SDD | NEW DRAWING. |

**UTAH DEPARTMENT OF TRANSPORTATION**
STANDARD DRAWINGS FOR ROAD AND BRIDGE CONSTRUCTION
SALT LAKE CITY, UTAH

RECOMMENDED FOR APPROVAL — AUG 30, 2018 DATE
CHAIRMAN STANDARDS COMMITTEE APPROVED — AUG 30, 2018 DATE
DEPUTY DIRECTOR

STANDARD DRAWING TITLE
MIDWEST 31 INCH W-BEAM GUARDRAIL ANCHOR TYPE 1

STD. DWG. NO.
BA 4C1B

12-SEP-2018 DGN File: D:\StandardsandSpecsSection\2017Section\All Supp Issues\Issue # 6 08-30-2018\Drawings\BA04C1B.dgn

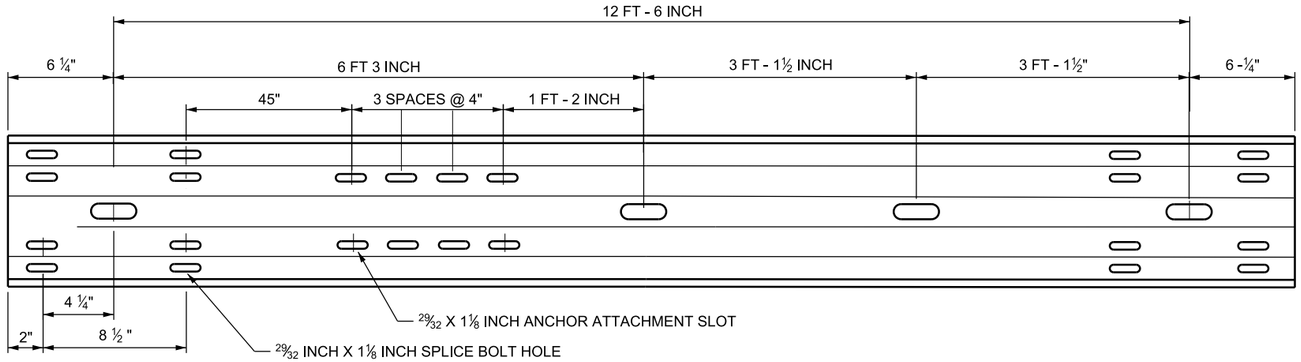


## RAIL ELEMENT

SEE NOTE 1

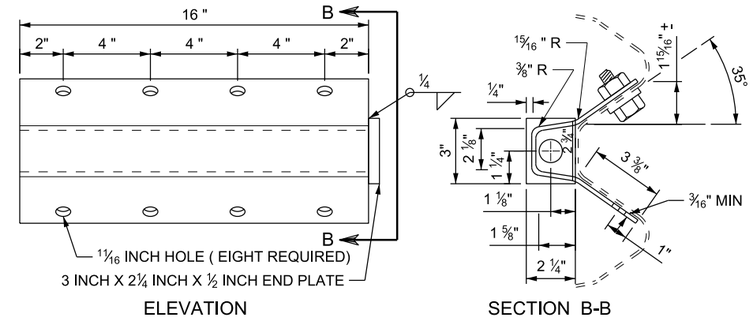


## ANCHOR BRACKET

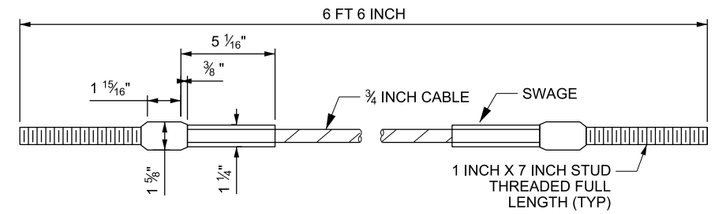


## CABLE ANCHOR ASSEMBLY

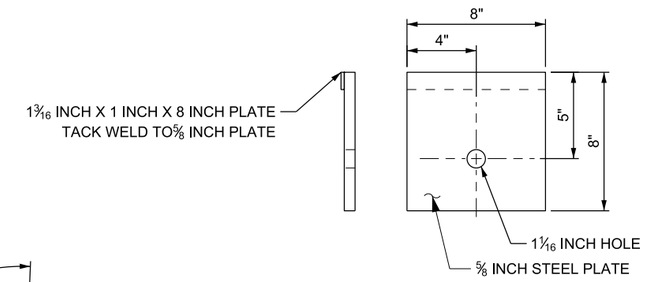


NOTE:
INSTALL BEARING PLATE WITH 5 INCH PORTION UP. SECURE PLATE TO POST USING TWO NAILS AT TOP OF PLATE.

## BEARING PLATE

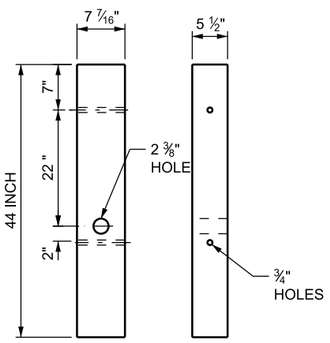


## WOOD BREAKAWAY POST

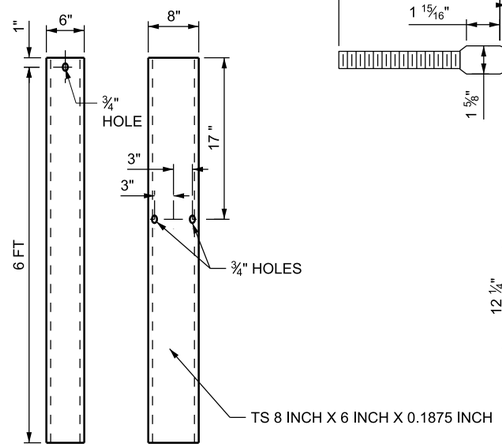


## FOUNDATION TUBE

SEE NOTE 1

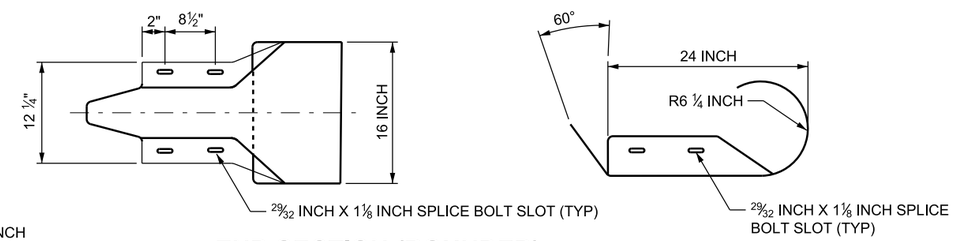


## END SECTION (ROUNDED)

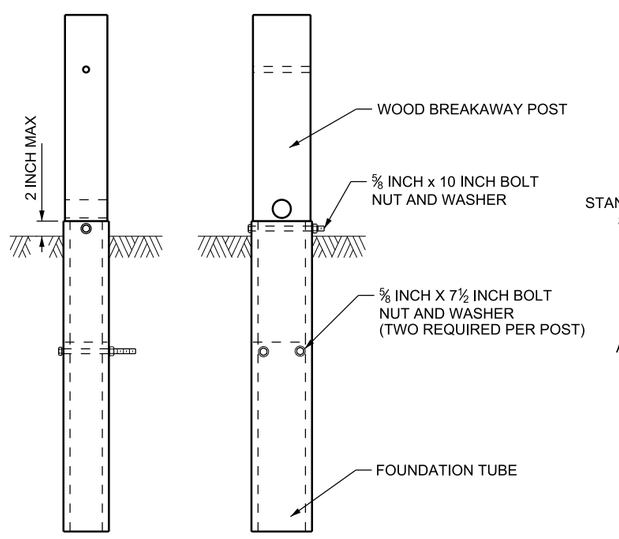


## ANCHOR POST ASSEMBLY

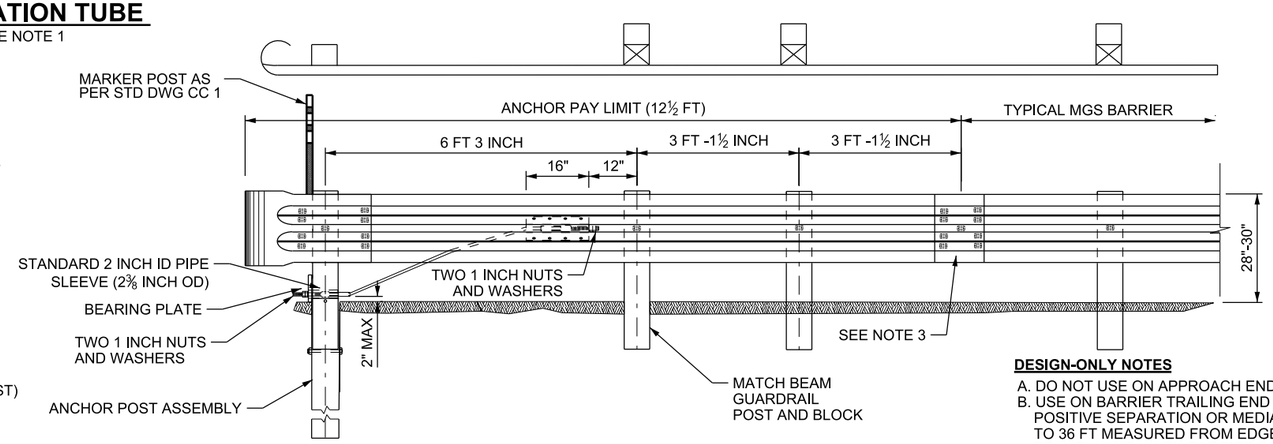


## W-BEAM ANCHOR INSTALLATION

**DESIGN-ONLY NOTES**

A. DO NOT USE ON APPROACH END.
B. USE ON BARRIER TRAILING END ON DIVIDED ROADWAYS WITH A POSITIVE SEPARATION OR MEDIAN WIDTH GREATER THAN OR EQUAL TO 36 FT MEASURED FROM EDGE OF TRAVEL LANE TO EDGE OF TRAVEL LANE WHEN BARRIER END IS OUTSIDE THE MAXIMUM REQUIRED CLEAR ZONE AS DEFINED IN THE UDOT ROADWAY DESIGN MANUAL AND THE AASHTO ROADSIDE DESIGN GUIDE.

**NOTES:**

1. MANUFACTURE ACCORDING TO AASHTO GUIDE TO STANDARDIZED HIGHWAY BARRIER HARDWARE.
2. INSTALL SPLICE BOLTS ONLY WITHIN THE MID-SPAN SPLICE JOINT. DO NOT INSTALL CENTER BOLT.
3. USE WITH W-BEAM GUARDRAIL CURVED BREAKAWAY ONLY.

SUPPLEMENTAL DRAWING

REVISIONS

| NO. | DATE | APPR. | REMARKS |
|---|---|---|---|
| 1 | 10/26/2017 | SDD | CORRECTED SLOT CALL OUTS TO MEET AASHTO M180. CORRECTED END SECTION ANGLE OF CENTER CORRUGATION. DELETED NOTE 2 & RENUMBERED NOTES. ADDED NOTE 3. CHANGED TITLE & DWG. NO. |

**UTAH DEPARTMENT OF TRANSPORTATION**
STANDARD DRAWINGS FOR ROAD AND BRIDGE CONSTRUCTION
SALT LAKE CITY, UTAH

RECOMMENDED FOR APPROVAL — AUG 30, 2018 DATE
CHAIRMAN STANDARDS COMMITTEE APPROVED — AUG 30, 2018 DATE
DEPUTY DIRECTOR

CURVED GUARDRAIL ANCHOR
STANDARD DRAWING TITLE

STD. DWG. NO.
BA 4G2

DGN File:D:\StandardsandSpecsSection\2017Section\All Supp Issues\Issue # 6 08-30-2018\Drawings\BA04G2.dgn
12-SEP-2018

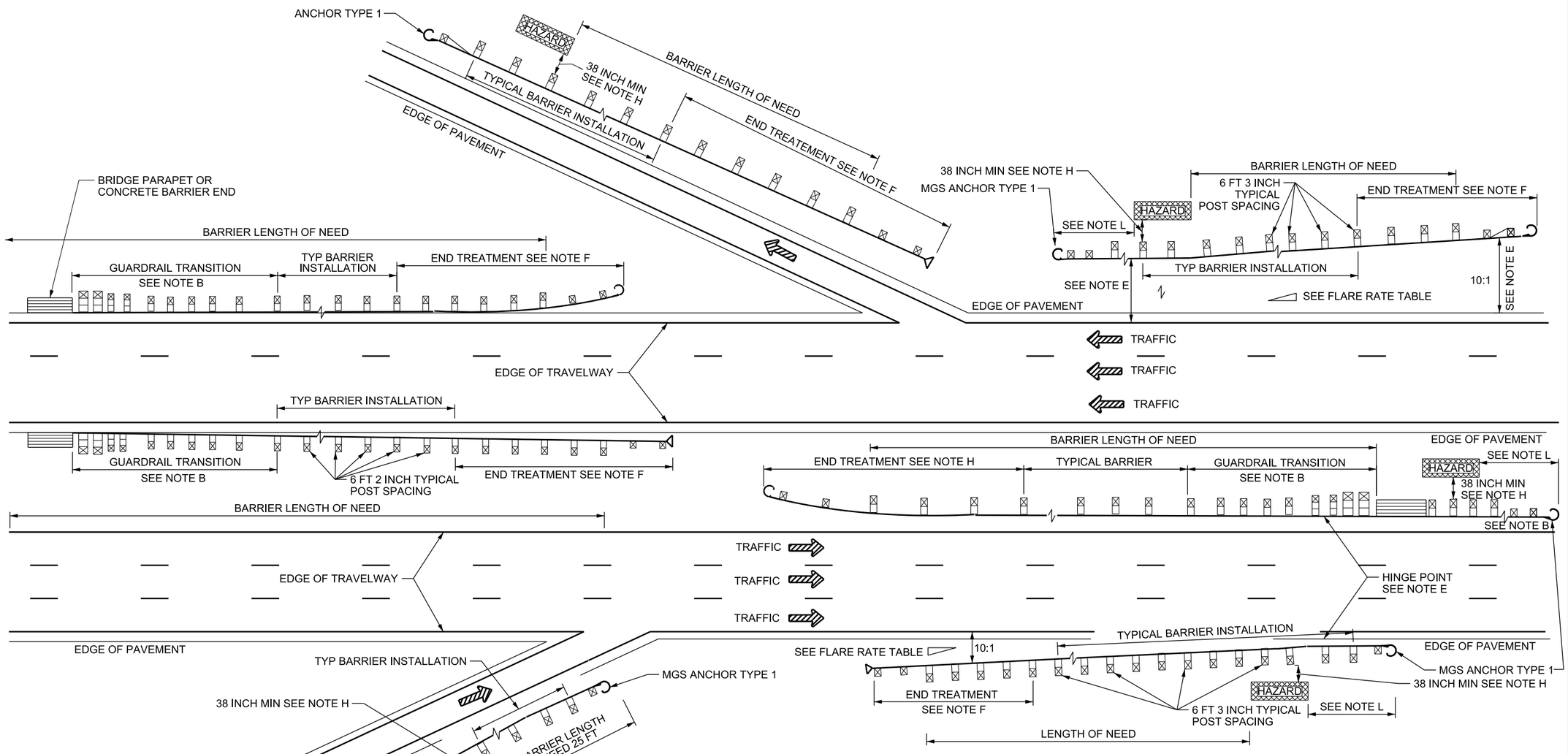


## FLARE RATE TABLE

| SPEED (MPH) | RATE OUTSIDE SHY LINE | * RATE INSIDE SHY LINE |
|---|---|---|
| ≤ 35 | 7:1 | 13:1 |
| 40 | 8:1 | 16:1 |
| 45 | 10:1 | 18:1 |
| 50 | 11:1 | 21:1 |
| 55 | 12:1 | 24:1 |
| 60 | 14:1 | 26:1 |
| 65 | 15:1 | 30:1 |
| ≤ 70 | 15:1 | 30:1 |

* DESIGN EXCEPTION REQUIRED

**DESIGN-ONLY NOTES:**

A. END TREATMENT REQUIRED WHEN BARRIER END IS WITHIN THE MAXIMUM REQUIRED AASHTO ROADSIDE DESIGN GUIDE CLEAR ZONE REQUIREMENTS.
B. REFER TO STD DWG BA 4B2 WHEN ATTACHING W-BEAM GUARDRAIL TO THE APPROACH END OR TRAILING END OF CONCRETE BARRIERS OR BRIDGE PARAPETS.
C. CONSIDER USING BURIED TERMINAL END, BA 4F SERIES STD DWG WHEN CONDITIONS PERMIT.
D. USE FLARED GUARDRAIL INSTALLATIONS WHEN POSSIBLE.
E. USES OF MGS W-BEAM GUARDRAIL INSTALLATION PERMITTED ON A SLOPE NO STEEPER THAN 10:1. MATCH ROADWAY CROSS-SLOPE IF SUPER ELEVATED MORE THAN 2 PERCENT. REFER TO BA 4D SERIES STD DWG.
F. END TREATMENTS SHOWN ARE FOR ILLUSTRATION. TYPES G AND H CAN BE USED ON TANGENT OR FLARED GUARDRAIL INSTALLATIONS.
G. CONSULT GUIDELINES FOR CRASH CUSHIONS AND BARRIER END TREATMENTS CC SERIES STD DWGS FOR PROPER END TREATMENT SELECTION AND INSTALLATION REQUIREMENTS.
H. REFER TO STD DWG BA 4H3 FOR REDUCED DEFLECTION REQUIREMENTS WHEN 38 INCHES CANNOT BE MAINTAINED BEHIND W-BEAM GUARDRAIL POST TO FACE OF HAZARD. USE 42 INCHES DEFLECTION FOR INITIAL LONG POST 2:1 FILL SLOPE INSTALLATION WITH STANDARD POST SPACING
I. RECOVERY AREA IS THAT AREA EXTENDING LATERALLY FROM THE APPROACH END OF THE GUARDRAIL TERMINAL TO THE BEGINNING OF THE LENGTH OF NEED AND OUT TO THE DESIGNED CLEAR ZONE. SLOPES IN THE RECOVERY AREA TO BE DETAILED AT THE SAME SLOPE RATE AS REQUIRED BY THE UDOT ROADWAY DESIGN MANUAL FOR THE ROADWAY TYPE.
J. PLACE NO NON-YIELDING DEVICES INSIDE RECOVERY AREA.
K. PLACE YIELDING DEVICES , SUCH AS SIGN POST, A MINIMUM OF 75 FT BACK FROM HEAD OF END TREATMENT AND OFFSET MINIMUM OF 10 FT FROM BACK OF TYPICAL W-BEAM BARRIER. REFER TO CC SERIES STD DWG FOR PLACEMENT IN FRONT OF END TREATMENT OR CRASH CUSHION.
L. USE 25 FT BARRIER LENGTH OF NEED MEASURED FROM THE END OF ANCHOR BACK TO HAZARD FOR THE MIDWEST 31 INCH GUARDRAIL (MGS) ANCHOR TYPE 1.

SUPPLEMENTAL DRAWING

DESIGN-ONLY DRAWING

REVISIONS

| NO. | DATE | APPR. | REMARKS |
|---|---|---|---|
| 1 | 10/26/2017 | SDD | ADDED MGS ANCHOR TYPE 1 REQUIREMENTS. ADDED NOTE L. |

**UTAH DEPARTMENT OF TRANSPORTATION**
STANDARD DRAWINGS FOR ROAD AND BRIDGE CONSTRUCTION
SALT LAKE CITY, UTAH

RECOMMENDED FOR APPROVAL — AUG 30, 2018 DATE
CHAIRMAN STANDARDS COMMITTEE APPROVED — AUG 30, 2018 DATE
DEPUTY DIRECTOR

STANDARD DRAWING TITLE
MIDWEST 31 INCH W-BEAM GUARDRAIL TYPICALS DIVIDED ROADWAYS

STD. DWG. NO.
BA 4J1

DGN File: Q:\StandardsandSpecsSection\2017Section\All Supp Issues\Issue # 6 08-30-2018\Drawings\BA04J1.dgn
12-SEP-2018

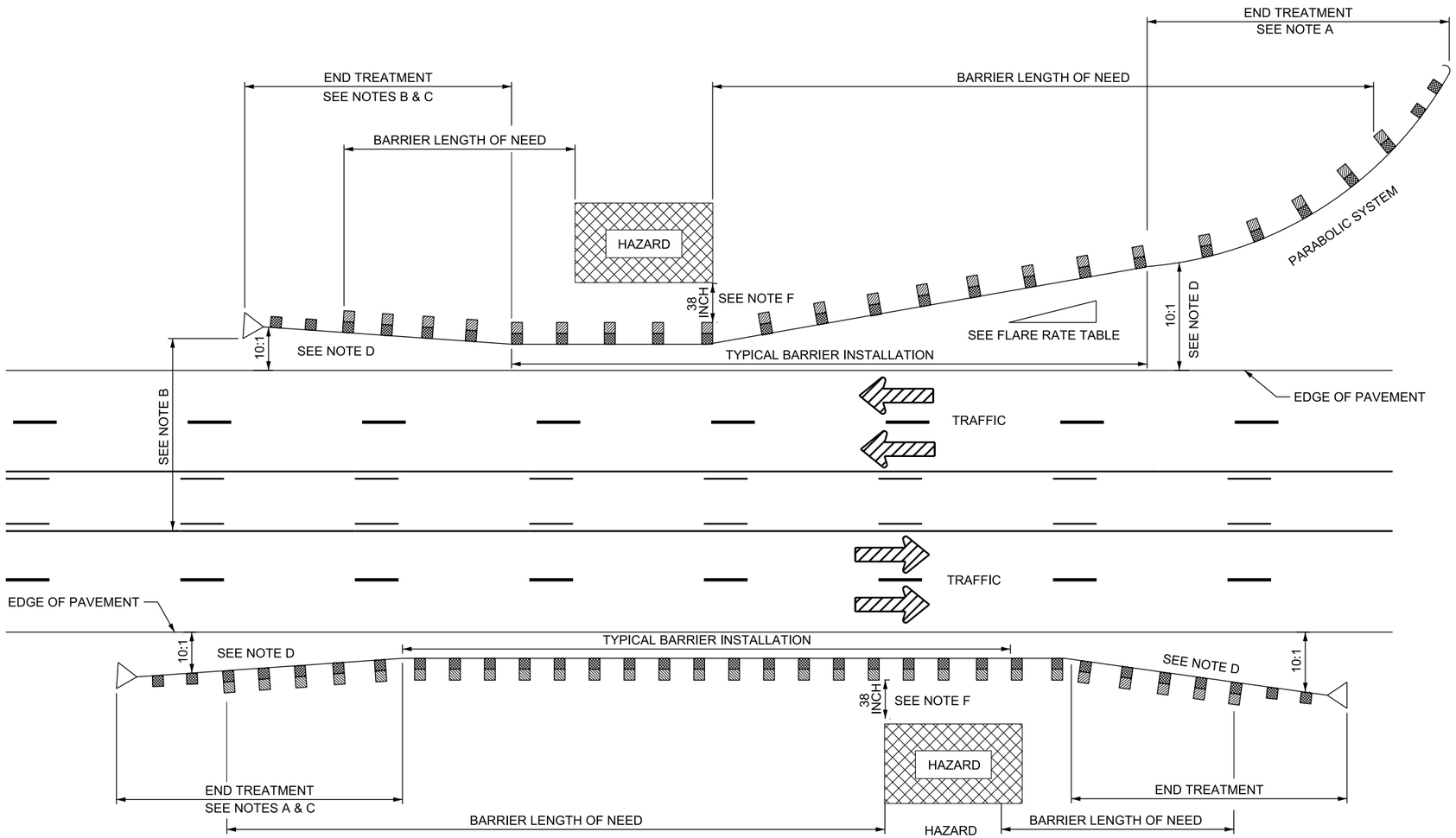


| FLARE RATE TABLE | | |
|---|---|---|
| SPEED (MPH) | RATE OUTSIDE SHY LINE | * RATE INSIDE SHY LINE |
| ≤ 35 | 7:1 | 13:1 |
| 40 | 8:1 | 16:1 |
| 45 | 10:1 | 18:1 |
| 50 | 11:1 | 21:1 |
| 55 | 12:1 | 24:1 |
| 60 | 14:1 | 26:1 |
| 65 | 15:1 | 30:1 |
| ≤ 70 | 15:1 | 30:1 |

* DESIGN EXCEPTION REQUIRED

**DESIGN-ONLY NOTES**

A. APPROACH END:
USE AN APPROVED END TREATMENT, AS APPROVED IN THE GUIDELINES FOR CRASH CUSHION AND BARRIER END TREATMENTS OR A BURIED IN BACK SLOPE TERMINAL (BA 4F SERIES STD DWGS).

B. TRAILING END:
USE AN APPROVED END TREATMENT, AS APPROVED IN THE GUIDELINES FOR CRASH CUSHION AND BARRIER END TREATMENTS OR A BURIED IN BACK SLOPE TERMINAL (BA 4F SERIES STD DWGS ON DIVIDED ROADWAY WITHOUT POSITIVE SEPARATON.

C. END TREATMENT SHOWN ARE FOR ILLUSTRATION. USE TYPE G ON TANGENT GUARDRAIL INSTALLATIONS.

D. USES OF MGS W-BEAM GUARDRAIL AND END TREATMENT INSTALLATION PERMITTED ON A SLOPE NO STEEPER THAN 10:1. MATCH ROADWAY CROSS-SLOPE IF SUPERELEVATED MORE THAN 2 PERCENT. REFER TO BA 4D SERIES STD DWG.

E. CONSULT GUIDELINES FOR CRASH CUSHIONS AND BARRIER END TREATMENTS, CC SERIES STD DWGS FOR PROPER END TREATMENT SELECTION AND INSTALLATION REQUIREMENTS.

F. REFER TO STD DWG BA 4H3 FOR REDUCED DEFLECTION REQUIREMENTS WHEN 38 INCHES CANNOT BE MAINTAINED BEHIND W-BEAM GUARDRAIL POST TO FACE OF HAZARD. USE 42 INCHES DEFLECTION FOR INITIAL LONG POST 2:1 FILL SLOPE INSTALLATION WITH STANDARD POST SPACING.

SUPPLEMENTAL DRAWING

DESIGN-ONLY DRAWING

REVISIONS

| NO. | DATE | APPR. | REMARKS |
|---|---|---|---|
| 1 | 10/26/2017 | SDD | REPLACED ANCHOR TYPE II WITH AN END TREATMENT. CHANGED NOTE B, C, & D. |

**UTAH DEPARTMENT OF TRANSPORTATION**
STANDARD DRAWINGS FOR ROAD AND BRIDGE CONSTRUCTION
SALT LAKE CITY, UTAH

RECOMMENDED FOR APPROVAL — AUG 30, 2018 DATE
CHAIRMAN STANDARDS COMMITTEE APPROVED — AUG 30, 2018 DATE
DEPUTY DIRECTOR

MIDWEST 31 INCH W-BEAM GUARDRAIL TYPICAL MULTILANE ARTERIAL

STANDARD DRAWING TITLE

STD. DWG. NO.
BA 4J2

12-SEP-2018 DGN File:D:\StandardsandSpecsSection\2017Section\All Supp Issues\Issue # 6 08-30-2018\Drawings\BA04J2.dgn

| FLARE RATE TABLE | | |
|---|---|---|
| SPEED (MPH) | RATE OUTSIDE SHY LINE | * RATE INSIDE SHY LINE |
| ≤ 35 | 7:1 | 13:1 |
| 40 | 8:1 | 16:1 |
| 45 | 10:1 | 18:1 |
| 50 | 11:1 | 21:1 |
| 55 | 12:1 | 24:1 |
| 60 | 14:1 | 26:1 |
| 65 | 15:1 | 30:1 |
| ≤ 70 | 15:1 | 30:1 |

* DESIGN EXCEPTION REQUIRED

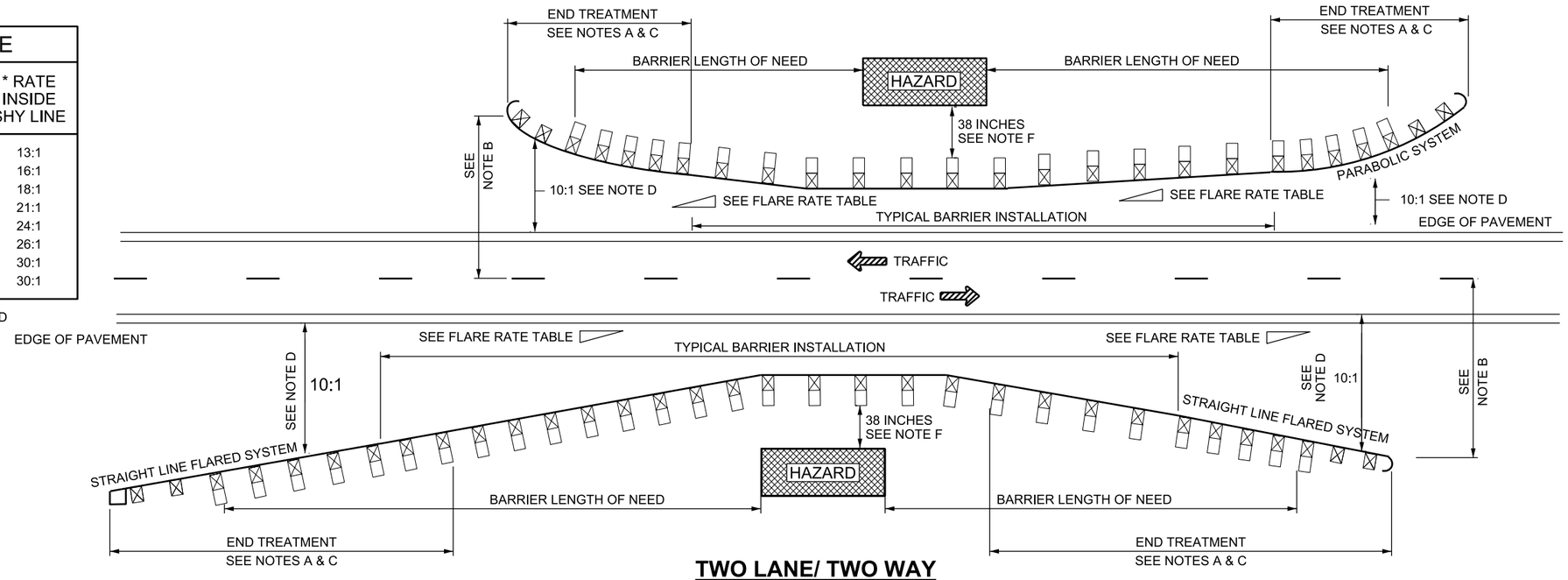


## TWO LANE/ TWO WAY FLARED GUARDRAIL INSTALLATION

(DETAIL BA 4J3-2)

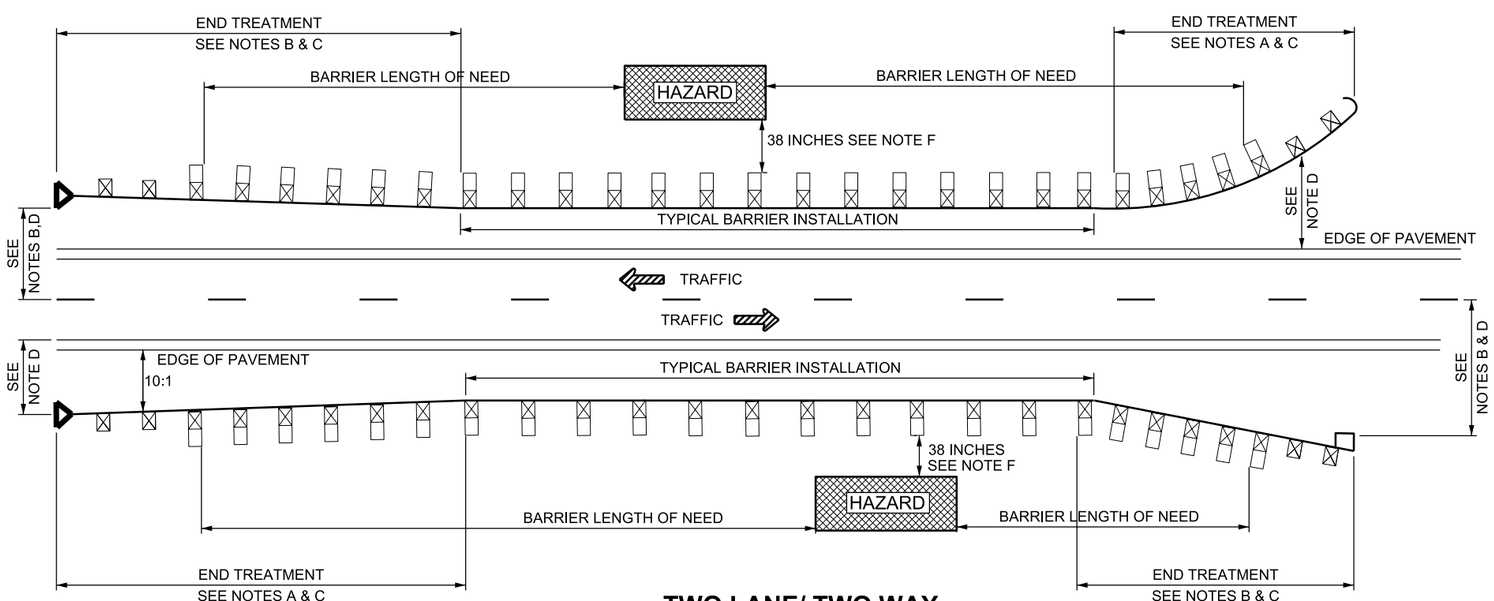


## TWO LANE/ TWO WAY TANGENT GUARDRAIL INSTALLATION

(DETAIL BA 4J3-1)

**DESIGN-ONLY NOTES**

A. APPROACH END:
USE AN APPROVED END TREATMENT, AS APPROVED IN THE GUIDELINES FOR CRASH CUSHION AND BARRIER END TREATMENTS OR A BURIED IN BACK SLOPE TERMINAL (BA 4F SERIES STD DWGS). AN ANCHOR TYPE II PERMITTED WHEN DESIGN SPEED IS 40 MPH OR LESS.

B. TRAILING END:
1. USE AN END TREATMENT AS APPROVED IN GUIDELINES FOR CRASH CUSHION AND BARRIER END TREATMENTS CURRENT EDITION, OR A BURIED IN BACK SLOPE TERMINAL WITHIN CLEAR ZONE AS DEFINED IN THE UDOT ROADWAY DESIGN MANUAL AND AASHTO ROADSIDE DESIGN GUIDE.
2. USE AN ANCHOR TYPE II, STD DWG BA 4C2.AT OR BEYOND MINIMUM CLEAR ZONE AS DEFINED IN THE UDOT ROADWAY DESIGN MANUAL AND AASHTO ROADSIDE DESIGN GUIDE

C. END TREATMENTS SHOWN ARE FOR ILLUSTRATION. TYPES "G" AND "H" CAN BE USED ON TANGENT OR FLARED GUARDRAIL INSTALLATIONS.

D. USES OF MGS W-BEAM GUARDRAIL INSTALLATION PERMITTED ON A SLOPE NO STEEPER THAN 10:1. MATCH ROADWAY CROSS-SLOPE IF SUPERELEVATED MORE THAN 2 PERCENT. REFER TO STD DWG BA 4D SERIES.

E. CONSULT GUIDELINES FOR CRASH CUSHIONS AND END TREATMENTS CC SERIES STANDARD DRAWINGS, FOR PROPER END TREATMENT SELECTION AND INSTALLATION REQUIREMENTS.

F. REFER TO STD DWG 4H3 FOR REDUCED DEFLECTION REQUIREMENTS WHEN 38 INCHES CANNOT BE MAINTAINED BEHIND W-BEAM GUARDRAIL POST TO FACE OF HAZARD. USE 42 INCHES DEFLECTION FOR INITIAL LONG POST 2:1 FILL SLOPE INSTALLATION WITH STANDARD POST SPACING.

SUPPLEMENTAL DRAWING

DESIGN-ONLY DRAWING

REVISIONS

| NO. | DATE | APPR. | REMARKS |
|---|---|---|---|
| | | | |

UTAH DEPARTMENT OF TRANSPORTATION
STANDARD DRAWINGS FOR ROAD AND BRIDGE CONSTRUCTION
SALT LAKE CITY, UTAH

RECOMMENDED FOR APPROVAL — AUG 30, 2018 DATE
CHAIRMAN STANDARDS COMMITTEE APPROVED — AUG 30, 2018 DATE
DEPUTY DIRECTOR

MIDWEST 31 INCH W-BEAM GUARDRAIL TYPICAL 2 LANE 2 WAY

STANDARD DRAWING TITLE

STD. DWG. NO.
BA 4J3

DGN File: Q:\Standardsand\Specs\Section\2017\Section\All Supp Issues\Issue # 6 08-30-2018\Drawings\BA04J3.dgn
12-SEP-2018

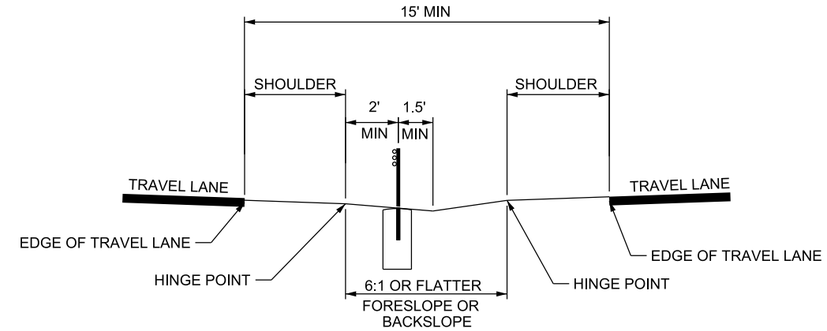


## NARROW MEDIAN PLACEMENT

SEE NOTES A, C, & 3

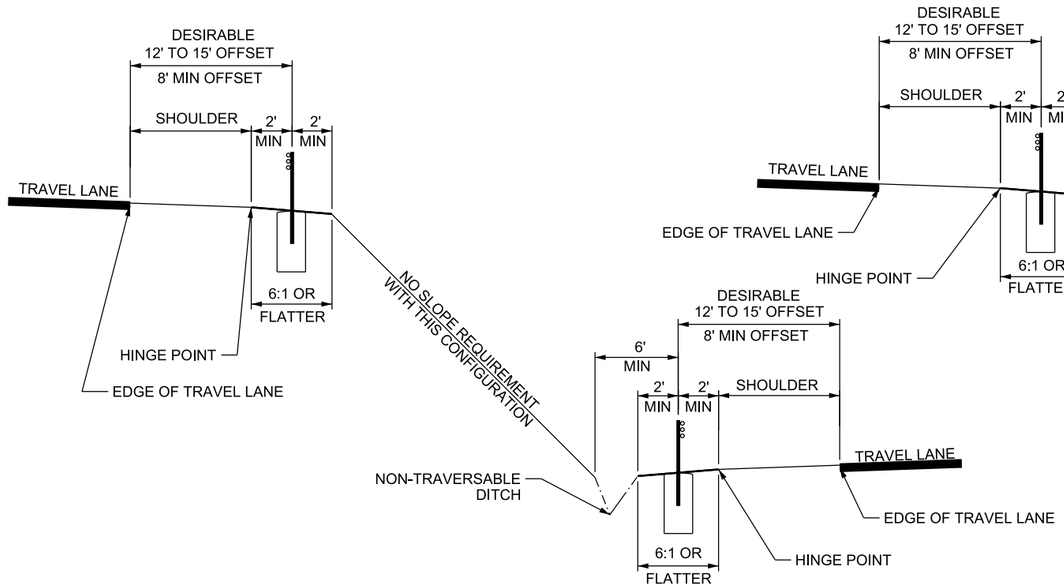


## MEDIAN PLACEMENT WITH VERTICALLY OFFSET LANES WITH DITCH

NOTE C DOES NOT APPLY

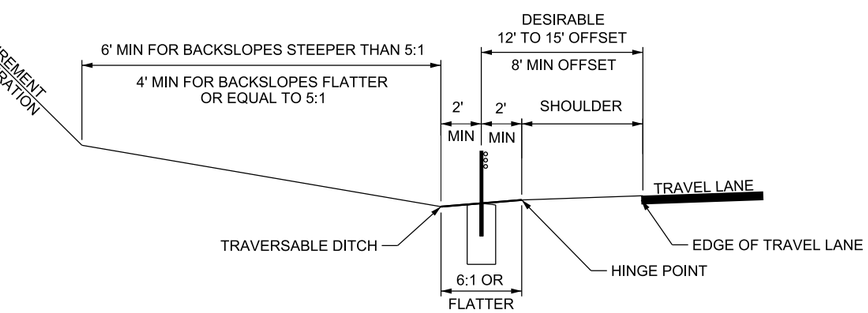


## MEDIAN PLACEMENT WITH VERTICALLY OFFSET LANES WITH NO DITCH

NOTE C DOES NOT APPLY

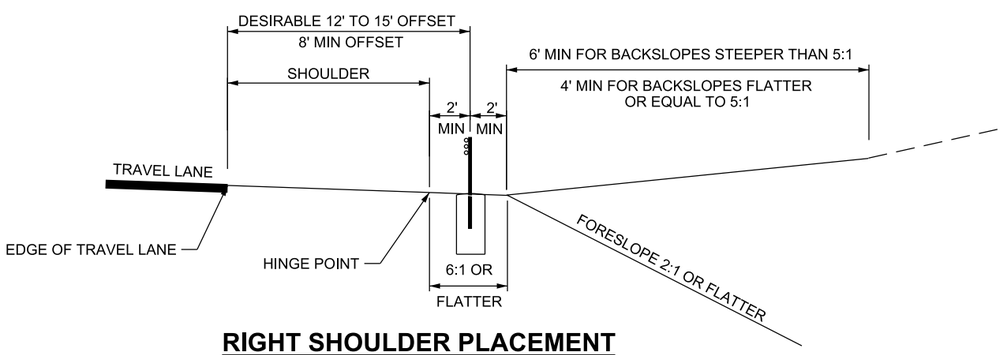


## RIGHT SHOULDER PLACEMENT

NOTE C DOES NOT APPLY

**DESIGN-ONLY NOTES:**

A. PLACE CABLE 12 FT TO 15 FT FROM EDGE OF TRAVEL LANE UNLESS THE 8 FT MIN OFF SET FROM DITCH BOTTOM IS NOT OBTAINED; OTHERWISE, PLACE CABLE 1.5 FT OFFSET FROM DITCH BOTTOM OR 8 FT OFFSET FROM EDGE OF TRAVEL LANE THROUGH THE REGION TRAFFIC ENGINEER'S APPROVAL.

B. DETAILS DEPICT MAIN RUNS OF CABLE BARRIER. SEE ANCHOR DETAILS FOR PLACEMENT OF ANCHOR SYSTEMS.

C. DO NOT USE IN MEDIANS LESS THAN 15 FT WIDE MEASURED FROM EDGE OF TRAVEL LANE TO EDGE OF TRAVEL LANE.

**NOTES:**

1. FLARE RATE: FLATTER OR EQUAL TO 30:1 DESIRABLE, 20:1 MINIMUM ACCEPTABLE.
2. SEE STD DWG BA 5B1 FOR TYPICAL POST SPACING REQUIREMENTS.
3. USE 5 FT POST SPACING WHEN:
   A. MEDIAN WIDTH IS GREATER THAN 15 FT BUT LESS THAN 20 FT.
   B. CABLE IS OFFSET LESS THAN 8 FT FROM ANY TRAVEL LANE.
4. REFER TO THE ROADSIDE DESIGN GUIDE CHAPTER 6 FOR DETERMINING THE PLACEMENT OF BARRIER IN NON- LEVEL MEDIANS. SEE THE UDOT ROADWAY DESIGN MANUAL FOR MEDIAN AND SHOULDER SLOPE REQUIREMENTS.

SUPPLEMENTAL DRAWING

REVISIONS

| NO. | DATE | APPR. | REMARKS |
|---|---|---|---|

UTAH DEPARTMENT OF TRANSPORTATION
STANDARD DRAWINGS FOR ROAD AND BRIDGE CONSTRUCTION
SALT LAKE CITY, UTAH

RECOMMENDED FOR APPROVAL — AUG 30, 2018 DATE
CHAIRMAN STANDARDS COMMITTEE APPROVED — AUG 30, 2018 DATE
DEPUTY DIRECTOR

CABLE BARRIER PLACEMENT

STANDARD DRAWING TITLE

STD. DWG. NO.
BA 5B2

DGN File: O:\StandardsandSpecsSection\2017Section\All Supp Issues\Issue # 6 08-30-2018\Drawings\BA05B2.dgn
12-SEP-2018

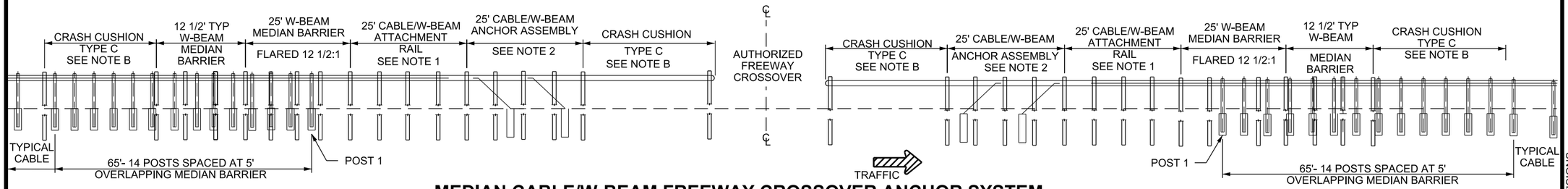


## MEDIAN CABLE/W-BEAM FREEWAY CROSSOVER ANCHOR SYSTEM
## ELEVATION

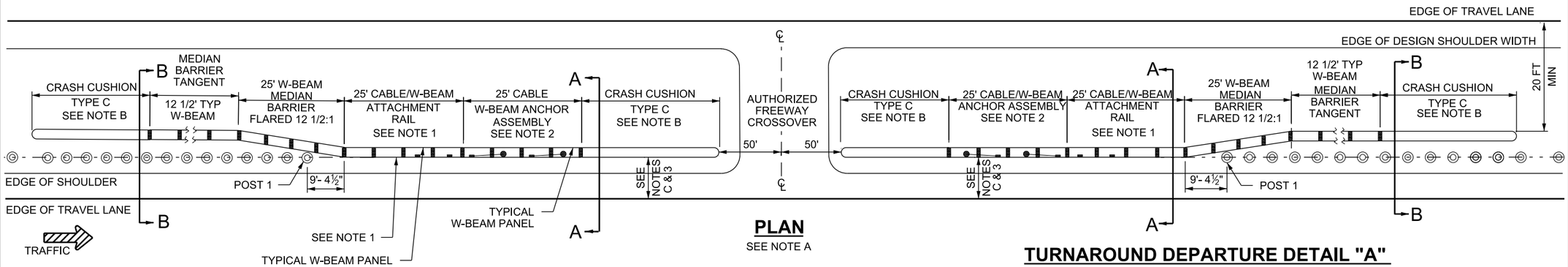


## TURNAROUND APPROACH DETAIL

## PLAN
SEE NOTE A

## TURNAROUND DEPARTURE DETAIL "A"
## GREATER THAN 35 FT MEDIAN
SEE NOTE A

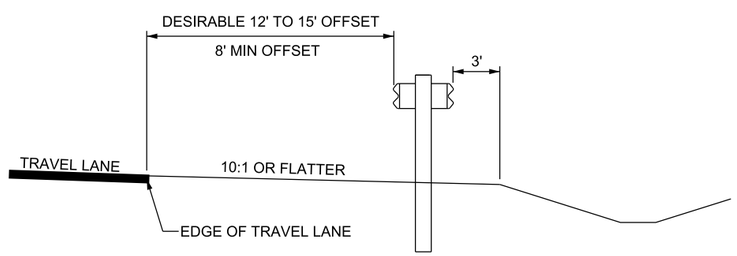


## SECTION A-A
SEE NOTES C & 3

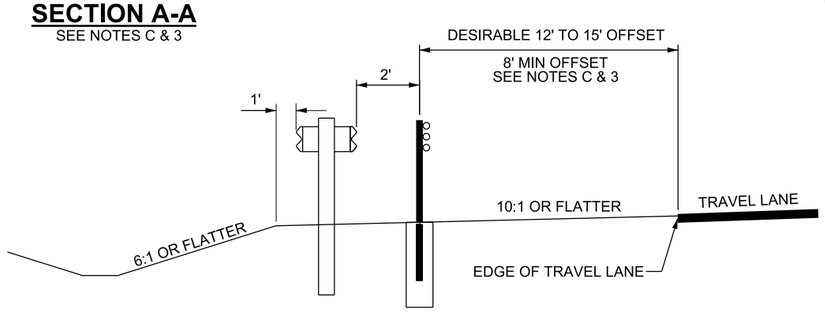


## SECTION B-B
SEE NOTES C & 3

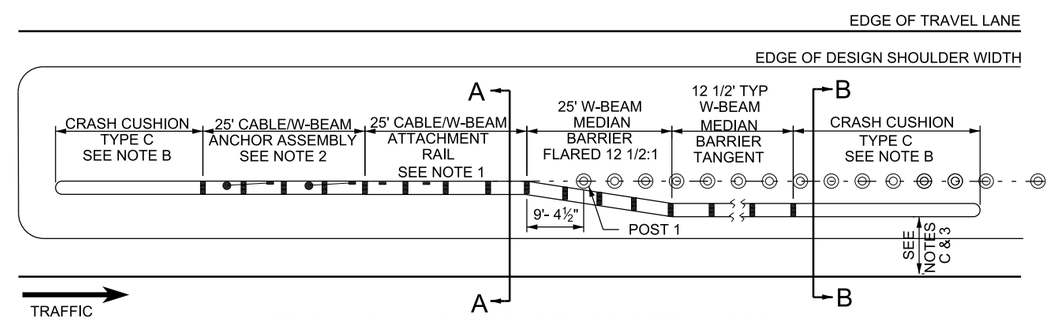


## TURNAROUND DEPARTURE DETAIL "B"
## GREATER THAN 15 FT TO LESS THAN 35 FT MEDIAN
SEE NOTE A

**DESIGN-ONLY NOTES:**

A. FREEWAY, EXPRESSWAY, AND OTHER DIVIDED ROADWAY LEFT SHOULDER APPLICATION WITH A MEDIAN WIDTH LESS THAN OR EQUAL TO 50 FT MEASURED FROM EDGE OF TRAVEL LANE TO EDGE OF TRAVEL LANE.
   1) USE DETAIL "A" WHEN MEDIAN WIDTH IS MORE THAN OR EQUAL TO 35 FT AND LESS THAN 50 FT.
   2) USE DETAIL "B" WHEN MEDIAN WIDTH IS GREATER THAN 15 FT AND LESS THAN 35 FT.
B. USE TYPE C CRASH CUSHION: SEE GUIDELINES FOR CRASH CUSHION & END TREATMENTS.
C. REFER TO STD DWG BA 5B1 AND BA 5B2 FOR OFFSET AND SLOPE REQUIREMENTS.
D. SEE UDOT ROADWAY DESIGN MANUAL DM 10.3 FOR FREEWAY CROSSOVER WIDTH.

**NOTES:**

1. MEET MANUFACTURER'S REQUIREMENTS FOR CABLE TO RAIL ATTACHMENTS. RAIL ELEMENT IS CABLE BARRIER SYSTEM SPECIFIC. ELEMENT RANGES IN LENGTH FROM 6 FT 3 INCHES TO 25 FT. SUPPLY ASSOCIATED HARDWARE.
2. SEE STD DWG BA 5C1 FOR MEDIAN ANCHOR REQUIREMENTS.
3. SEE PLAN SET FOR PROJECT OFFSET REQUIREMENTS.

SUPPLEMENTAL DRAWING

| REVISIONS | | | |
|---|---|---|---|
| NO. | DATE | APPR. | REMARKS |

**UTAH DEPARTMENT OF TRANSPORTATION**
STANDARD DRAWINGS FOR ROAD AND BRIDGE CONSTRUCTION
SALT LAKE CITY, UTAH

RECOMMENDED FOR APPROVAL — AUG 30, 2018 DATE
CHAIRMAN STANDARDS COMMITTEE APPROVED — AUG 30, 2018 DATE
DEPUTY DIRECTOR — DATE

MEDIAN CABLE BARRIER
W-BEAM DOUBLE SIDED
AND FREEWAY CROSSOVER
ANCHOR SYSTEM
(TYPE C; C.A.T.)
STANDARD DRAWING TITLE

STD. DWG. NO.
BA 5D1

DGN File:Q:\Standardsand\SpecsSection\2017Section\All Supp Issues\Issue # 6 08-30-2018\Drawings\BA05D1.dgn
12-SEP-2018

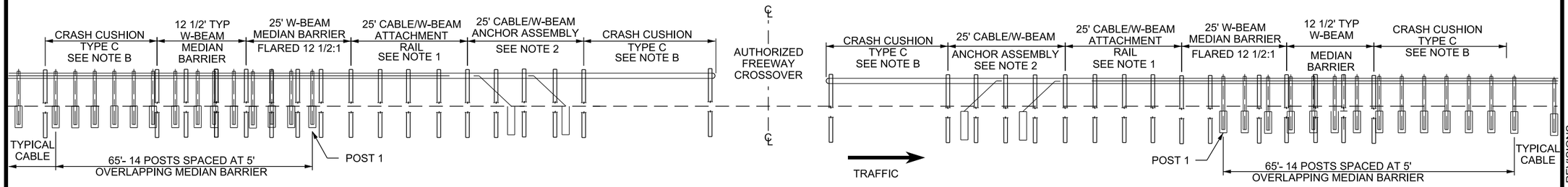


## MEDIAN CABLE/W-BEAM FREEWAY CROSSOVER ANCHOR SYSTEM
## ELEVATION

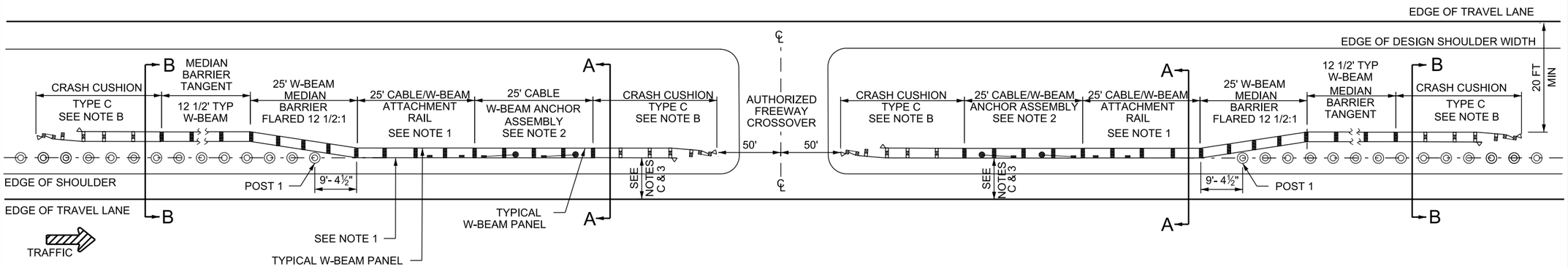


## TURNAROUND APPROACH DETAIL

## PLAN
SEE NOTE A

## TURNAROUND DEPARTURE DETAIL "A"
## 35 FT TO 50 FT MEDIAN
SEE NOTE A

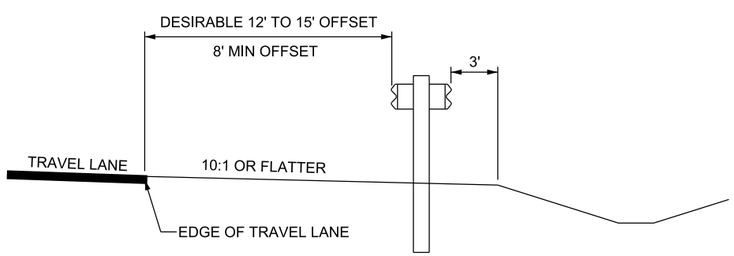


## SECTION A-A
SEE NOTES C & 3

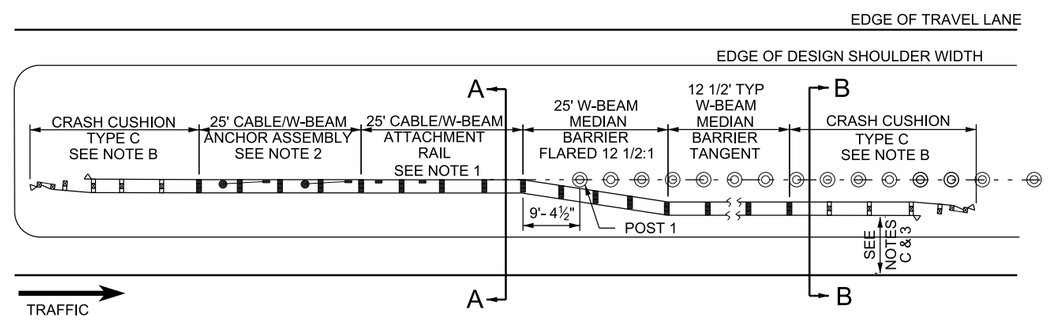


## TURNAROUND DEPARTURE DETAIL "B"
## GREATER THAN 15 FT TO LESS THAN 35 FT MEDIAN
SEE NOTE A

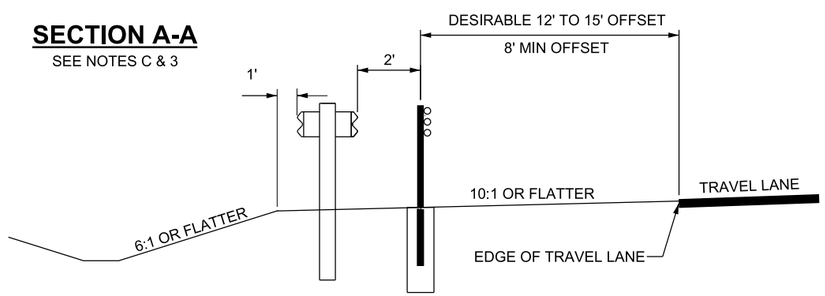


## SECTION B-B
SEE NOTES C & 3

**DESIGN-ONLY NOTES:**

A. FREEWAY, EXPRESSWAY, AND OTHER DIVIDED ROADWAY LEFT SHOULDER APPLICATION WITH A MEDIAN WIDTH LESS THAN OR EQUAL TO 50 FT MEASURED FROM EDGE OF TRAVEL LANE TO EDGE OF TRAVEL LANE.
   1) USE DETAIL "A" WHEN MEDIAN WIDTH IS MORE THAN OR EQUAL TO 35 FT AND LESS THAN 50 FT.
   2) USE DETAIL "B" WHEN MEDIAN WIDTH IS GREATER THAN 15 FT AND LESS THAN 35 FT.
B. USE TYPE C CRASH CUSHION: SEE GUIDELINES FOR CRASH CUSHION & END TREATMENTS.
C. REFER TO STD DWG BA 5B1 AND BA 5B2 FOR OFFSET AND SLOPE REQUIREMENTS.
D. SEE UDOT ROADWAY DESIGN MANUAL DM 10.3 FOR FREEWAY CROSSOVER WIDTH.

**NOTES:**

1. MEET MANUFACTURER'S REQUIREMENTS FOR CABLE TO RAIL ATTACHMENTS. RAIL ELEMENT IS CABLE BARRIER SYSTEM SPECIFIC. ELEMENT RANGES IN LENGTH FROM 6 FT 3 INCHES TO 25 FT. SUPPLY ASSOCIATED HARDWARE.
2. SEE STD DWG BA 5C1 FOR MEDIAN ANCHOR REQUIREMENTS.
3. SEE PLAN SET FOR PROJECT OFFSET REQUIREMENTS.

SUPPLEMENTAL DRAWING

| NO. | DATE | APPR. | REMARKS |
|---|---|---|---|
| | | | |

REVISIONS

**UTAH DEPARTMENT OF TRANSPORTATION**
STANDARD DRAWINGS FOR ROAD AND BRIDGE CONSTRUCTION
SALT LAKE CITY, UTAH

RECOMMENDED FOR APPROVAL — AUG 30, 2018 — DATE
CHAIRMAN STANDARDS COMMITTEE — AUG 30, 2018 — DATE
APPROVED
DEPUTY DIRECTOR

MEDIAN CABLE BARRIER
W-BEAM DOUBLE SIDED
AND FREEWAY
CROSSOVER
ANCHOR SYSTEM
(TYPE C; FLEAT-MT)
STANDARD DRAWING TITLE

STD. DWG. NO.
BA 5D2

DGN File: D:\StandardsandSpecsSection\2017Section\All Supp Issues\Issue # 6 08-30-2018\Drawings\BA05D2.dgn
12-SEP-2018

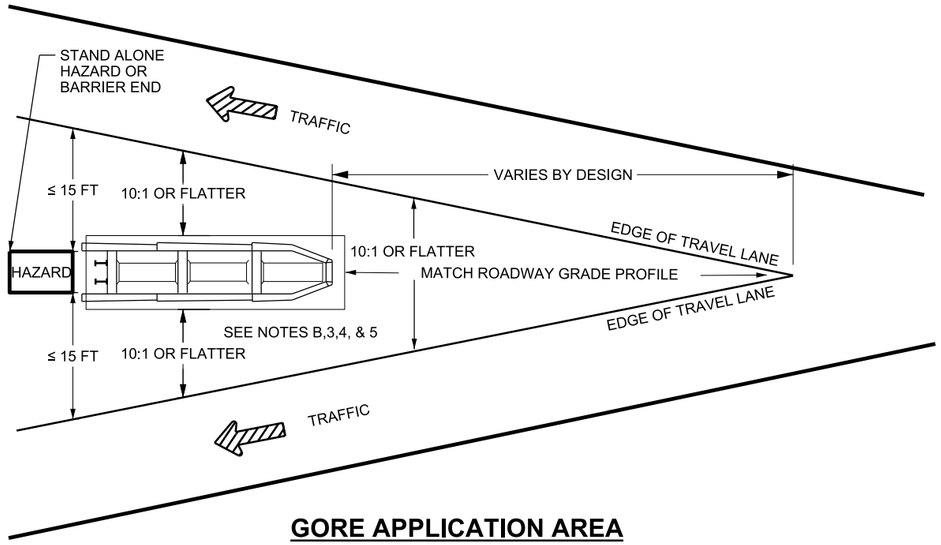


## GORE APPLICATION AREA

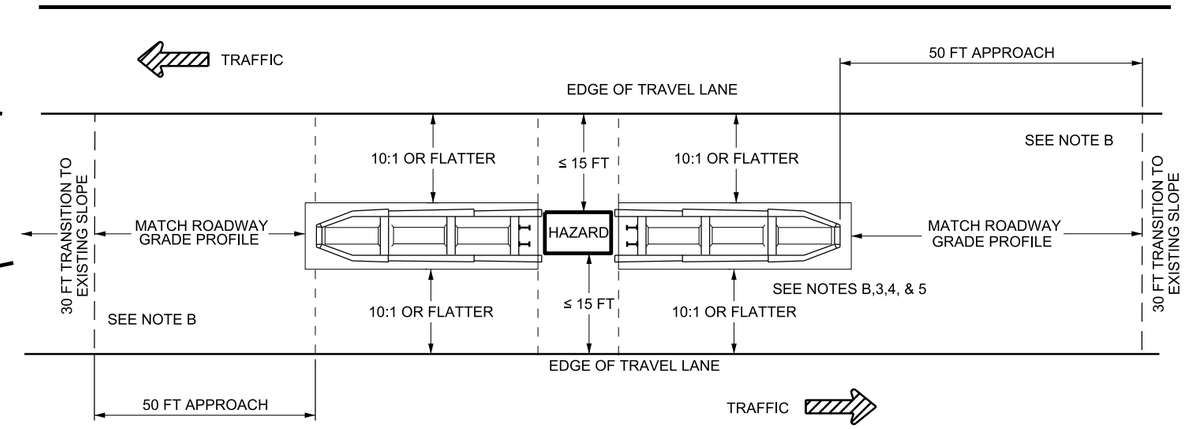


## MEDIAN APPLICATION

SEE NOTE C

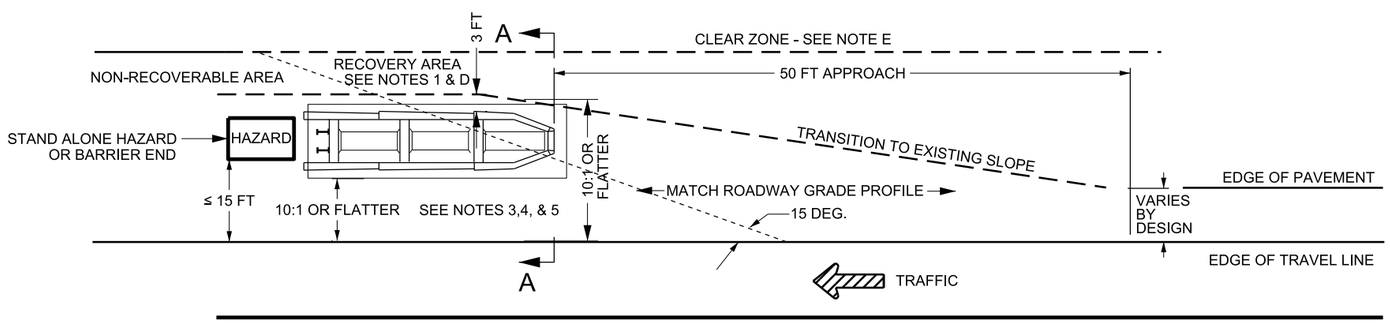


## SHOULDER APPLICATION

SEE NOTE C

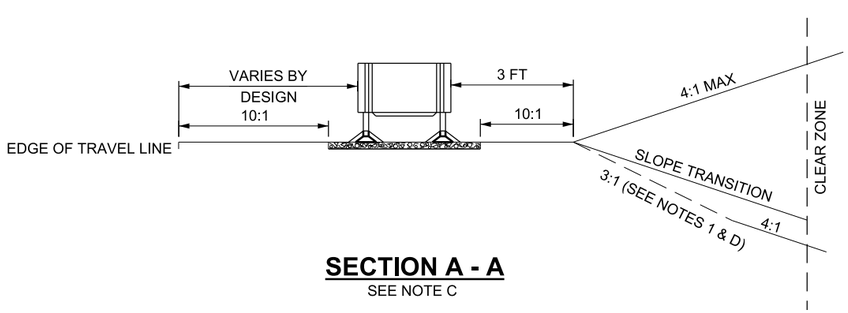


## SECTION A - A

SEE NOTE C

**DESIGN-ONLY NOTES:**

A. REFER TO GUIDELINES FOR CRASH CUSHIONS AND BARRIER END TREATMENTS FOR APPROVED SYSTEMS AND FOR SPECIFIC APPLICATION DETAILS.
B. ALL APPLICATIONS REQUIRE THE USE OF A 10:1 SLOPE OR FLATTER TO THE FRONT AND SIDE APPROACHES. USE A 10:1 OR FLATTER SLOPE AT THE REAR OF THE SYSTEM WHEN TRAFFIC ALSO APPROACHES FROM THE REAR OF THE SYSTEM.
C. PROTECT BARRIER ENDS WITH A W-BEAM GUARDRAIL TRANSITION AND TYPE G OR TYPE H W-BEAM END TREATMENT OR TYPE F END TREATMENT AS FIRST OPTION. PROTECT CONCRETE BARRIER END USING A CRASH CUSHION TYPES A, B, OR D WHEN THE INSTALLATION REQUIREMENTS OF A W-BEAM GUARDRAIL TRANSITION AND W-BEAM END TREATMENT OR TYPE F END TREATMENT CANNOT BE MET.
D. MEET SLOPE REQUIREMENTS AS DETAILED IN APPLICABLE UDOT ROADWAY DESIGN MANUAL DRAWINGS IN RECOVERY AREA. THE ADDITIONAL INFORMATION BELOW ARE THE MINIMUM ACCEPTABLE SLOPE REQUIREMENTS IN RECOVERY AREA.
   1. RECOVERY AREA IS THE AREA BEHIND THE CRASH CUSHION AND BARRIER SYSTEM EXTENDING FROM THE APPROACH END OF CRASH CUSHION TO THE END OF THE CALCULATED LENGTH OF NEED.
   2. USE A 4:1 OR FLATTER FILL SLOPE IN RECOVERY AREA. USE A MAXIMUM 3:1 FORESLOPE AND ESTABLISH RECOVERY AREA AT BOTTOM OF 3:1 SLOPE IF IMPRACTICAL. A 4:1 OR FLATTER IN RECOVERY AREA REQUIRED WHEN USED WITH A BACKSLOPE .
E. MAINTAIN AASHTO CLEAR ZONE REQUIREMENTS.

**NOTES:**

1. COMPLETE SLOPE PREPARATIONS PRIOR TO INSTALLING SYSTEM.
2. USE A TRANSITION ELEMENT, ACCORDING TO MANUFACTURER'S SPECIFICATIONS, WHEN TRAFFIC APPROACHES THE REAR OF SYSTEM.
3. USE MANUFACTURER'S SPECIFICATIONS FOR PAD AND BACKUP REQUIREMENTS. A CONCRETE PAD IS REQUIRED FOR PERMANENT INSTALLATION OF TYPE A, B & D CRASH CUSHIONS.
4. CONSTRUCT PAD TO MEET CROSS SLOPE LISTED WITHIN THE PLAN SET. CONSTRUCT PAD NOT TO EXCEED SYSTEM MANUFACTURER'S CROSS SLOPE REQUIREMENTS IF CROSS SLOPE IS STEEPER THAN 10:1. GRADING WILL BE COMPLETED FLUSH TO THE TOP OF THE PAD.
5. INSTALL PROPER MARKINGS ACCORDING TO STD DWG CC 1.
6. INSTALL A CONSTANT SLOPE TRANSITION SECTION BEFORE INSTALLING CRASH CUSHION OR END TREATMENT WHEN CONSTANT SLOPE TYPE BARRIER IS INSTALLED. REFER TO BA 3 SERIES STD DWGS .

SUPPLEMENTAL DRAWING

| REVISIONS | | | | |
|---|---|---|---|---|
| NO. | DATE | APPR. | REMARKS | |

**UTAH DEPARTMENT OF TRANSPORTATION**
STANDARD DRAWINGS FOR ROAD AND BRIDGE CONSTRUCTION
SALT LAKE CITY, UTAH

RECOMMENDED FOR APPROVAL — AUG 30, 2018 DATE
CHAIRMAN STANDARDS COMMITTEE APPROVED — AUG 30, 2018 DATE
DEPUTY DIRECTOR

DETAILS FOR PLACEMENT CRASH CUSHIONS TYPE A, B, AND D

STANDARD DRAWING TITLE

STD. DWG. NO.
CC 4A

DGN File:Q:\StandardsandSpecsSection\2017Section\All Supp Issues\Issue # 6 08-30-2018\Drawings\CC04A.dgn
12-SEP-2018

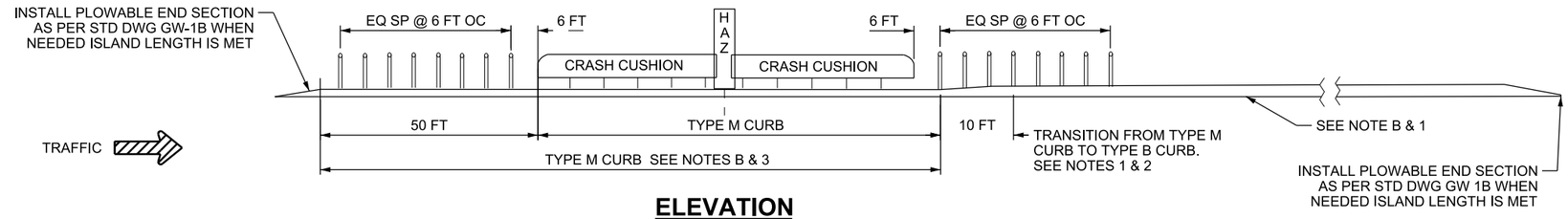


## ELEVATION

ONE APPROACH SHOWN
REVERSE APPROACH SIMILAR

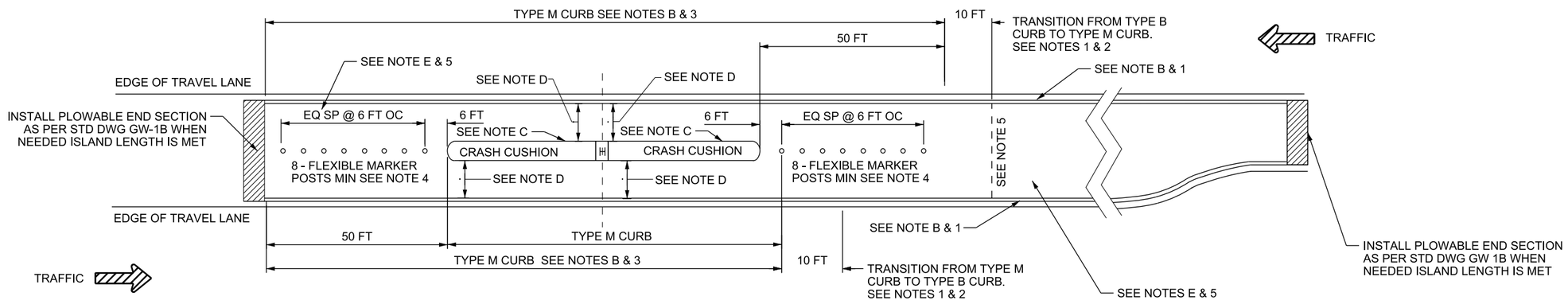


## PLAN VIEW

SEE NOTE A

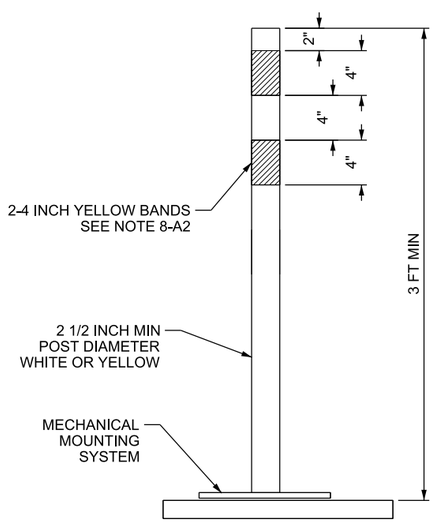


## FLEXIBLE MARKER POST SURFACE MOUNTED

SEE NOTE 4

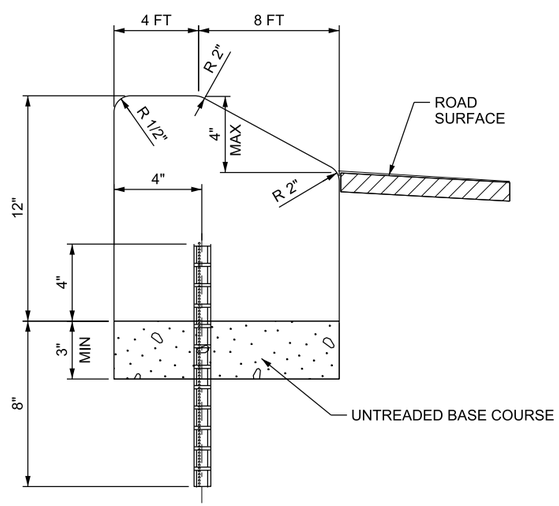


## MODIFIED TYPE M1-A CURB

USE # 6 X 12 INCH LONG COATED DEFORMED BARS ON 5 FT MAX CENTERS REFER TO NOTE B

**DESIGN-ONLY NOTES:**

A. THIS DRAWING DEPICTS TWO DETAILS THAT ARE ACCEPTABLE FOR THE USE OF A CRASH CUSHION ON AN ISLAND APPLICATION. CONSULT PLAN SET TO DETERMINE WHICH APPLICATION TO USE.
   1. EITHER PLAN VIEW ENDS CAN BE USED FOR BOTH APPROACH DIRECTIONS.
   2. PLAN CAN BE COMBINED, AS DEPICTED, FOR APPROACH TRAFFIC.
B. CRASH CUSHION MANUFACTURERS RECOMMEND NO MORE THAN A 4 INCH CURB TO THE APPROACH OR SIDES OF A CRASH CUSHION. USE TYPE M1-A, MODIFIED M1-A, OR M2 CURB WHERE TYPE M CURB IS CALLED OUT. USE OF TYPE M CURB IS ALLOWED FOR ALL ISLAND CURBING.
C. RECOMMEND USING TYPES A, B, OR D CRASH CUSHION SYSTEMS. REFER TO THE GUIDELINES FOR CRASH CUSHIONS AND BARRIER END TREATMENTS FOR APPROVED SYSTEMS. INSTALL CRASH CUSHIONS ON CONCRETE PAD ACCORDING TO MANUFACTURER'S REQUIREMENTS.
D. MEET OFFSET REQUIREMENTS ACCORDING TO THE UDOT ROADWAY DESIGN MANUAL. REFER TO LATERAL OFFSET TO OBSTRUCTION REQUIREMENTS, NOTE B.
E. EVALUATE DRAINAGE OF ISLAND SURFACE.

**NOTES:**

1. CONSULT PLAN SET TO DETERMINE WHICH TYPE M CURB AND TYPE B CURB TO USE. REFER TO STD DWG GW 2 OR MODIFIED TYPE M1-A DETAIL, THIS SHEET.
2. TRANSITION FROM TYPE M CURB TO TYPE B CURB WHERE SPECIFIED.
3. ISLAND LENGTH AND TYPE M CURB REQUIREMENTS CAN VARY BASED ON HAZARD LENGTH AND LENGTH OF CHOSEN CRASH CUSHION SYSTEM. MINIMUM ISLAND LENGTH IS EQUAL TO THE SUM OF HAZARD LENGTH, CRASH CUSHION LENGTH, AND THE MINIMUM 50 FT IN FRONT OF CRASH CUSHION.
4. MARKER POSTS ARE USED TO DISCOURAGE TRAFFIC FROM TRAVERSING ISLAND. USE A SURFACE MOUNTED FLEXIBLE MARKER POST AS APPROVED BY THE ENGINEER.
   A. FLEXIBLE MARKER POST:
      1. MANUFACTURED USING POLYETHYLENE OR POLYPROPYLENE WITH A YELLOW OR WHITE BODY, MINIMUM 0.110 INCH TUBE WALL THICKNESS, 36 INCH TALL.
      2. INSTALL TWO 4 INCH BANDS OF YELLOW SHEETING CONFORMING TO STANDARD SPECIFICATION 02890, ACCORDING TO FLEXIBLE MARKER POST DETAIL.
   B. USE A MECHANICAL SURFACE MOUNTING SYSTEM AND MOUNT ACCORDING TO MANUFACTURER'S REQUIREMENTS.
   C. USE A MOUNTING SYSTEM WHICH THE MARKER POST CAN BE REMOVED AND REPLACED WITHOUT DISTURBING THE MOUNTING BASE.
   D. ADDITIONAL MARKER POSTS INSTALLED AT ENGINEERS DISCRETION.
5. FILL ISLAND BETWEEN THE CURBS AND FROM THE CURB TRANSITION TO THE BACK OF THE CRASH CUSHION USING A DURABLE ALL WEATHER SURFACE (EXAMPLE: ASPHALT, CONCRETE). DO NOT PLACE LANDSCAPE MATERIAL IN FRONT OF OR TO THE SIDES OF CRASH CUSHION.

SUPPLEMENTAL DRAWING

| REVISIONS | | | |
|---|---|---|---|
| NO. | DATE | APPR. | REMARKS |

**UTAH DEPARTMENT OF TRANSPORTATION**
STANDARD DRAWINGS FOR ROAD AND BRIDGE CONSTRUCTION
SALT LAKE CITY, UTAH

RECOMMENDED FOR APPROVAL — AUG 30, 2018 DATE
CHAIRMAN STANDARDS COMMITTEE
APPROVED — AUG 30, 2018 DATE
DEPUTY DIRECTOR

CRASH CUSHION MOUNTED ON MEDIAN ISLAND
STANDARD DRAWING TITLE

STD. DWG. NO.
CC 4B

DGN File:Q:\StandardsandSpecsSection\2017Section\All Supp Issues\Issue # 6 08-30-2018\Drawings\CC048.dgn
12-SEP-2018

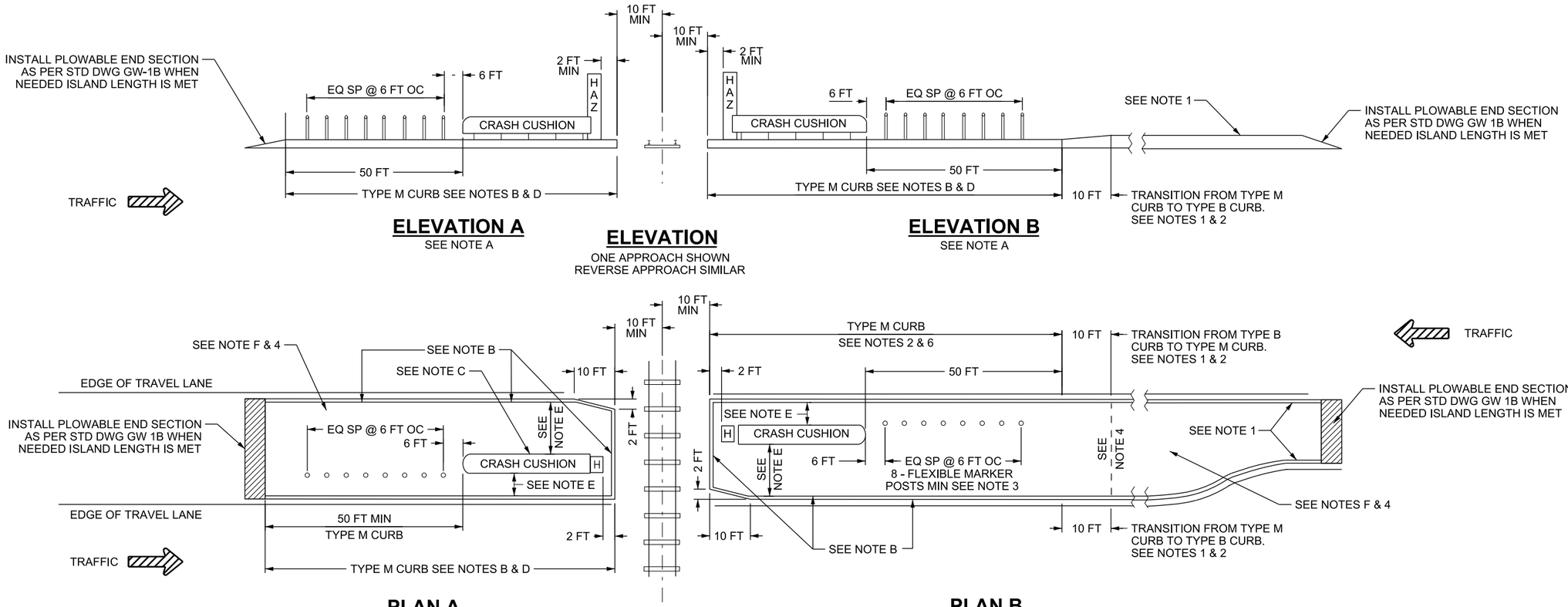


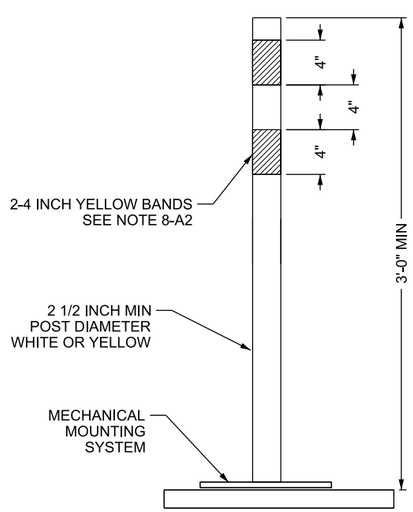


## FLEXIBLE MARKER POST SURFACE MOUNTED

SEE NOTE 3

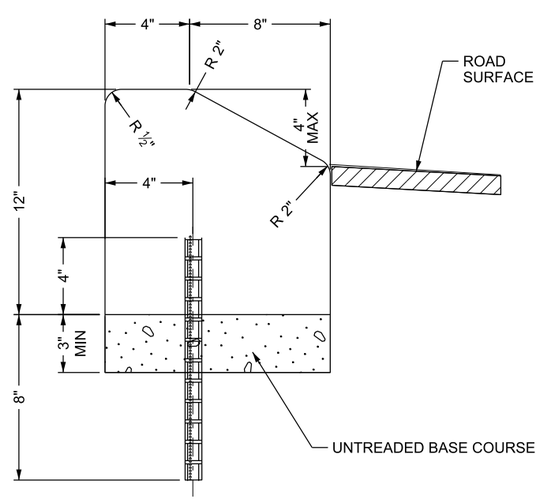


## MODIFIED TYPE M1-A CURB

USE # 6 X 12 INCH COATED DEFORMED BARS ON 5 FT MAX CENTERS REFER TO NOTE B

**DESIGN-ONLY NOTES:**

A. THIS DRAWING DEPICTS TWO DETAILS THAT ARE ACCEPTABLE FOR THE USE OF A CRASH CUSHION ON AN ISLAND APPLICATION. CONSULT PLAN SET TO DETERMINE WHICH APPLICATION TO USE.
   A. PLAN A CAN BE USED FOR BOTH APPROACH DIRECTIONS.
   B. PLAN B CAN BE USED FOR BOTH APPROACH DIRECTIONS.
   C. PLAN A AND B CAN BE COMBINED, AS DEPICTED, FOR APPROACH TRAFFIC.
B. CRASH CUSHION MANUFACTURERS RECOMMEND NO MORE THAN A 4 INCH CURB TO THE APPROACH OR SIDES OF A CRASH CUSHION. USE TYPE M1, MODIFIED M1, OR M2 CURB WHERE TYPE M CURB IS CALLED OUT. CONSULT PLAN SET TO DETERMINE WHICH M TYPE CURB TO USE. REFER TO STD DWG GW 2.
C. RECOMMEND USING TYPES A, B, OR D CRASH CUSHION SYSTEMS. REFER TO THE GUIDELINES FOR CRASH CUSHIONS AND BARRIER END TREATMENTS FOR APPROVED SYSTEMS. INSTALL CRASH CUSHIONS ON CONCRETE PAD ACCORDING TO MANUFACTURER'S REQUIREMENTS.
D. ISLAND LENGTH AND TYPE M CURB REQUIREMENTS CAN VARY BASED ON HAZARD LENGTH AND LENGTH OF CHOSEN CRASH CUSHION SYSTEM. MINIMUM ISLAND LENGTH IS EQUAL TO THE SUM OF REAR OFFSET, HAZARD LENGTH, CRASH CUSHION LENGTH, AND THE MINIMUM 50 FT IN FRONT OF CRASH CUSHION.
E. MEET OFFSET REQUIREMENTS ACCORDING TO THE UDOT ROADWAY DESIGN MANUAL. REFER TO LATERAL OFFSET TO OBSTRUCTION REQUIREMENTS, NOTE B.
F. EVALUATE DRAINAGE OF ISLAND SURFACE.

**NOTES:**

1. CONSULT PLAN SET TO DETERMINE WHICH TYPE B CURB TO USE. REFER TO STD DWG GW 2.
2. TRANSITION FROM TYPE M CURB TO TYPE B CURB WHERE SPECIFIED.
3. MARKER POSTS ARE USED TO DISCOURAGE TRAFFIC FROM TRAVERSING ISLAND. USE A SURFACE MOUNTED FLEXIBLE MARKER POST AS APPROVED BY THE ENGINEER.
   A. FLEXIBLE MARKER POST:
      1. CONSTRUCTED USING POLYETHYLENE OR POLYPROPYLENE WITH A YELLOW OR WHITE BODY, MINIMUM 0.110 INCH TUBE WALL THICKNESS, 36 INCH TALL.
      2. INSTALL TWO 4 INCH BANDS OF YELLOW SHEETING CONFORMING TO STANDARD SPECIFICATION 02890, ACCORDING TO FLEXIBLE MARKER POST DETAIL.
   B. USE A MECHANICAL SURFACE MOUNTING SYSTEM AND MOUNT ACCORDING TO MANUFACTURER'S REQUIREMENTS.
   C. USE A MOUNTING SYSTEM WHICH THE MARKER POST CAN BE REMOVED AND REPLACED WITHOUT DISTURBING THE MOUNTING BASE.
   D. ADDITIONAL MARKER POSTS INSTALLED AT ENGINEERS DISCRETION.
4. FILL ISLAND BETWEEN THE CURBS AND FROM THE CURB TRANSITION TO THE BACK OF THE CUSHION USING A DURABLE ALL WEATHER SURFACE (EXAMPLE: ASPHALT, CONCRETE). DO NOT PLACE LANDSCAPE MATERIAL IN FRONT OF OR TO THE SIDES OF CRASH CUSHION.

SUPPLEMENTAL DRAWING

REVISIONS

| NO. | DATE | APPR. | REMARKS |
|---|---|---|---|
| | | | |

**UTAH DEPARTMENT OF TRANSPORTATION**
STANDARD DRAWINGS FOR ROAD AND BRIDGE CONSTRUCTION
SALT LAKE CITY, UTAH

RECOMMENDED FOR APPROVAL — AUG 30, 2018 DATE
CHAIRMAN STANDARDS COMMITTEE APPROVED — AUG 30, 2018 DATE
DEPUTY DIRECTOR

CRASH CUSHION SPLIT MEDIAN ISLAND W/RR CROSSING

STANDARD DRAWING TITLE

STD. DWG. NO.
CC 4C

DGN File: Q:\StandardsandSpecsSection\2017Section\All Supp Issues\Issue # 6 08-30-2018\Drawings\CC04C.dgn
12-SEP-2018

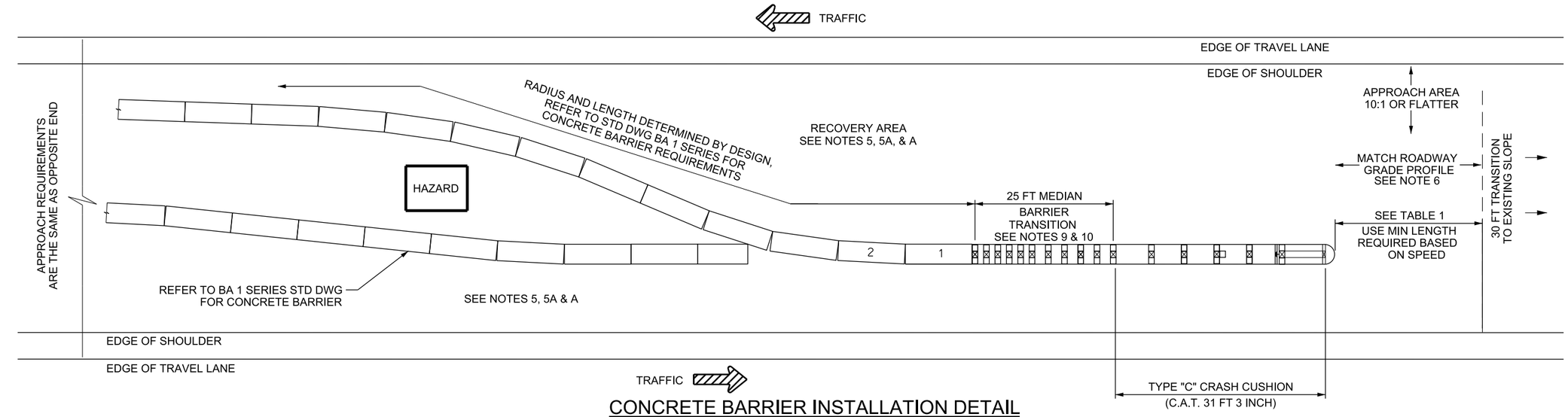


## CONCRETE BARRIER INSTALLATION DETAIL

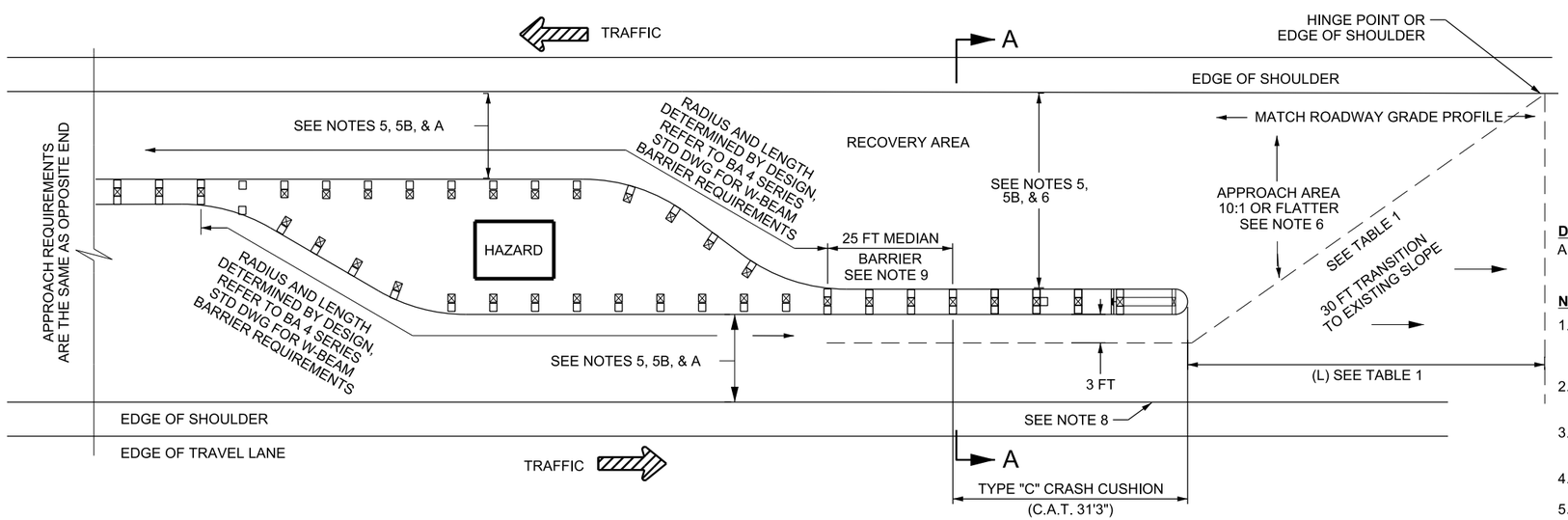


## W-BEAM GUARDRAIL BARRIER INSTALLATION DETAIL

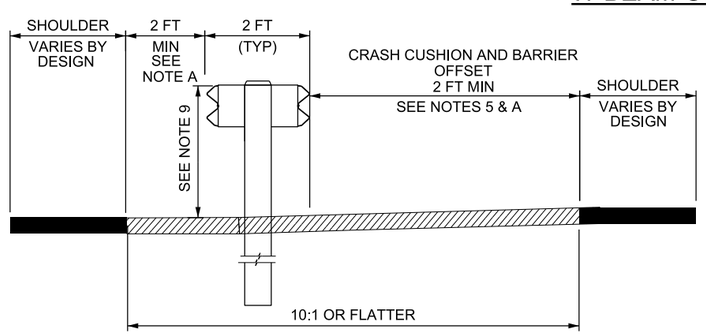


## SECTION A-A

MEDIAN APPLICATION
USE WHEN SLOPES ARE 10:1 OR
FLATTER ACROSS MEDIAN WIDTH

| TABLE 1 | |
|---|---|
| SPEED MPH | MIN LENGTH (L) |
| LESS THAN 40 | 50 FT |
| 40 TO 55 | 70 FT |
| 60 TO 80 | 100 FT |

**DESIGN-ONLY NOTES:**

A. 2 FT MINIMUM BARRIER OFFSET IS OPTIONAL WHEN ROADWAY DESIGN REQUIRES A 12 FT OR WIDER EFFECTIVE SHOULDER.

**NOTES**

1. THE C.A.T., MANUFACTURED BY TRINITY INDUSTRIES. SEE GUIDELINES FOR CRASH CUSHIONS AND BARRIER END TREATMENTS FOR SPECIFIC SYSTEM DETAILS.
2. INSTALL SYSTEM ACCORDING TO MANUFACTURER'S SPECIFICATIONS.
3. HAVE SHOP DRAWING AVAILABLE ON SITE FOR REFERENCE DURING INSTALLATION.
4. USE GRADED AND COMPACTED SURFACE FOR C.A.T. SYSTEMS.
5. COMPLETE SLOPE PREPARATION PRIOR TO INSTALLING SYSTEM. MEET SLOPE REQUIREMENTS IN RECOVERY AREA AS DETAILED IN APPLICABLE UDOT ROADWAY DESIGN MANUAL DRAWINGS. THE ADDITIONAL INFORMATION LISTED BELOW IS THE MINIMUM ACCEPTABLE SLOPE REQUIREMENTS APPROACH AND RECOVERY AREAS OF THIS CRASH CUSHION SYSTEM.
   A. USE A 10:1 OR FLATTER FORESLOPE IN THE APPROACH AND RECOVER AREAS WHEN SYSTEM IS BEING USED IN CONJUNCTION WITH CONCRETE BARRIER.
   B. USE A 10:1 OR FLATTER FORESLOPE IN THE APPROACH AND RECOVER AREA WHEN SYSTEM IS BEING USED IN CONJUNCTION WITH W-BEAM GUARDRAIL.
6. CLEAR RECOVERY AND APPROACH AREAS OF ANY FIXED OBJECTS. DO NOT PLACE SIGNS OR POLES IN APPROACH AREA. SIGNS OR POLES PLACED IN THE RECOVERY AREA WILL BE BREAKAWAY AND BE A MINIMUM 10 FT FROM SYSTEM RAIL ELEMENTS.
7. INSTALL REQUIRED MARKINGS AS PER STD DWG CC 1.
8. REFER TO BA 4 SERIES STD DWGS FOR MEDIAN BARRIER TRANSITION.
9. ADJUST W-BEAM MEDIAN BARRIER OR W-BEAM MEDIAN BARRIER TRANSITION HEIGHT FROM 31 INCHES TO 28 INCHES OVER LENGTH OF 25 FT FOR ATTACHMENT TO THE C.A.T. SYSTEM.

SUPPLEMENTAL DRAWING

REVISIONS

| NO. | DATE | APPR. | REMARKS |
|---|---|---|---|
| | | | |

**UTAH DEPARTMENT OF TRANSPORTATION**
STANDARD DRAWINGS FOR ROAD AND BRIDGE CONSTRUCTION
SALT LAKE CITY, UTAH

RECOMMENDED FOR APPROVAL — AUG 30, 2018 DATE
CHAIRMAN STANDARDS COMMITTEE APPROVED — AUG 30, 2018 DATE
DEPUTY DIRECTOR

GRADING AND
PLACEMENT DETAILS
CRASH CUSHION
TYPE C
C.A.T.

STANDARD DRAWING TITLE

STD. DWG. NO.
CC 5A

DGN File: Q:\Standards and Specs Section\2017 Section\All Supp Issues\Issue # 6 08-30-2018\Drawings\CC05A.dgn
12-SEP-2018

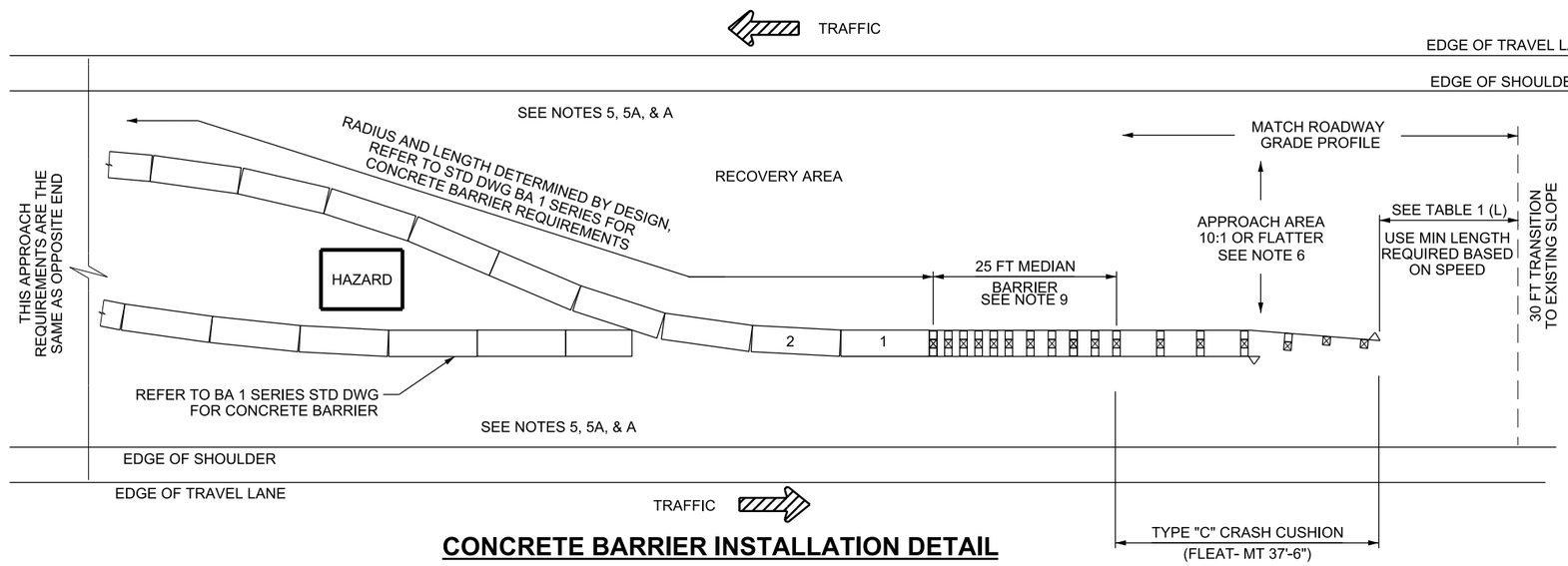


## CONCRETE BARRIER INSTALLATION DETAIL

| TABLE 1 | |
|---|---|
| SPEED MPH | MIN LENGTH (L) |
| LESS THAN 40 | 50 FT |
| 40 TO 55 | 70 FT |
| 60 TO 80 | 100 FT |

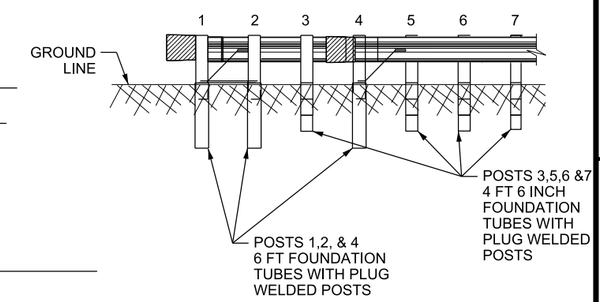


## ELEVATION

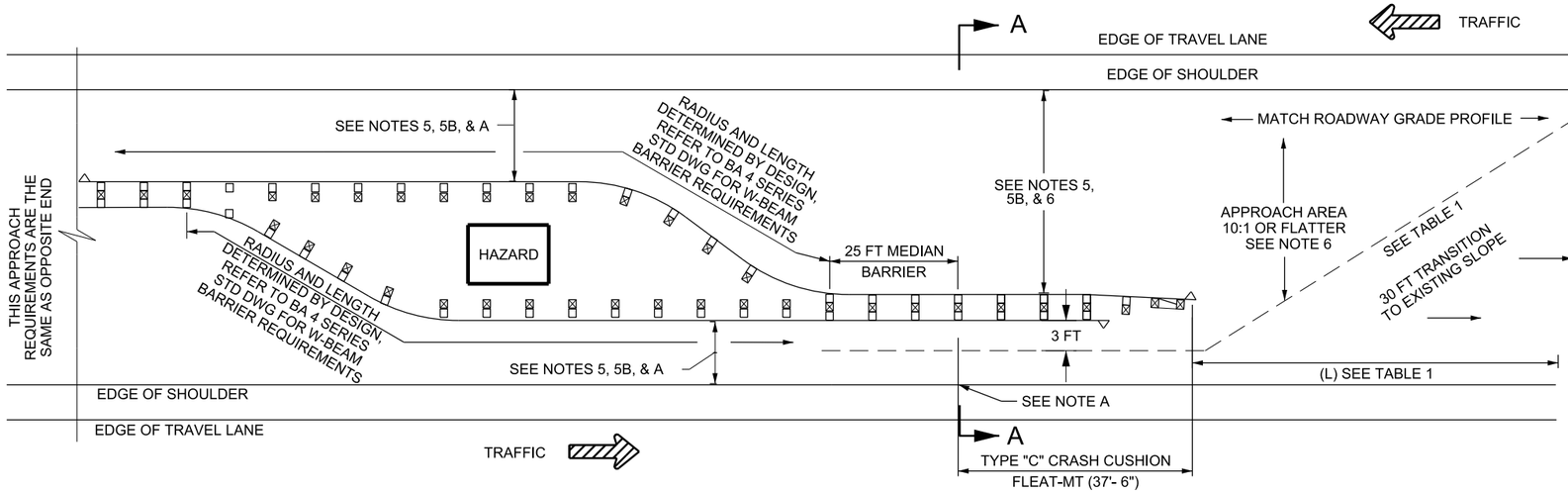


## W-BEAM GUARDRAIL BARRIER INSTALLATION DETAIL

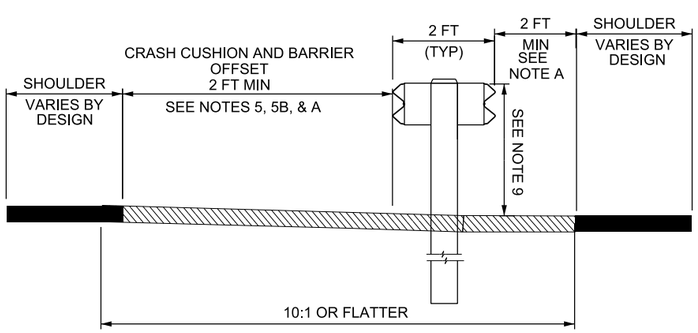


## SECTION A-A

MEDIAN APPLICATION
USE WHEN SLOPES ARE 10:1 OR FLATTER ACROSS MEDIAN WIDTH

**DESIGN-ONLY NOTES:**

A. 2 FT MINIMUM BARRIER OFFSET IS OPTIONAL WHEN ROADWAY DESIGN REQUIRES A 12 FT OR WIDER EFFECTIVE SHOULDER.

**NOTES:**

1. THE FLEAT-MT, MANUFACTURED BY ROAD SYSTEMS INC., SEE GUIDELINES FOR CRASH CUCHIONS AND BARRIER END TREATMENTS FOR SPECIFIC SYSTEM DETAILS.
2. INSTALL SYSTEMS ACCORDING TO DEPARTMENTS'S AND MANUFACTURER'S SPECIFICATIONS.
3. HAVE SHOP DRAWING AVAILABLE ON SITE FOR REFERENCE DURING INSTALLATION.
4. USE GRADED AND COMPACTED SURFACE FOR FLEAT-MT SYSTEMS.
5. COMPLETE SLOPE PREPARATIONS PRIOR TO INSTALLING SYSTEM. MEET SLOPE REQUIREMENTS IN RECOVERY AREA AS DETAILED IN APPLICABLE UDOT ROADWAY DESIGN MANUAL DRAWINGS. THE ADDITIONAL INFORMATION LISTED BELOW IS THE MINIMUM ACCEPTABLE SLOPE REQUIREMENTS FOR APPROACH AND RECOVERY AREAS OF THIS CRASH CUSHION SYSTEM.
   A. USE A 10:1 OR FLATTER FORESLOPE IN THE APPROACH AND RECOVERY AREAS WHEN SYSTEM IS BEING USED IN CONJUNCTION WITH CONCRETE BARRIER.
   B. USE A 10:1 OR FLATTER FORESLOPE IN THE APPROACH AND RECOVERY AREA WHEN SYSTEM IS BEING USED IN CONJUNCTION WITH W-BEAM.
6. CLEAR RECOVERY AND APPROACH AREAS OF ANY FIXED OBJECTS. DO NOT PLACE SIGNS OR POSTS IN APPROACH AREA. SIGNS OR POSTS PLACED IN THE RECOVERY AREA WILL BE BREAKAWAY AND AND BE A MINIMUM 10 FT FROM SYSTEM RAIL ELEMENTS.
7. INSTALL REQUIRED MARKINGS ACCORDING TO STD DWG CC 1 AND THIS DRAWING.
8. REFER TO BA 4 SERIES STD DWGS FOR MEDIAN BARRIER TRANSITION.
9. ADJUST W-BEAM BARRIER OR W-BEAM MEDIAN BARRIER TRANSITION HEIGHT FROM 30 INCHES TO 28 INCHES OVER A LENGTH OF 25 FT FOR ATTACHMENT TO THE FLEAT MT SYSTEM.

SUPPLEMENTAL DRAWING

REVISIONS

| NO. | DATE | APPR. | REMARKS |
|---|---|---|---|
| | | | |

UTAH DEPARTMENT OF TRANSPORTATION
STANDARD DRAWINGS FOR ROAD AND BRIDGE CONSTRUCTION
SALT LAKE CITY, UTAH

RECOMMENDED FOR APPROVAL — AUG 30, 2018 DATE
CHAIRMAN STANDARDS COMMITTEE — AUG 30, 2018 DATE
APPROVED — DEPUTY DIRECTOR

GRADING AND PLACEMENT DETAILS CRASH CUSHION TYPE C FLEAT-MT

STANDARD DRAWING TITLE

STD. DWG. NO.
CC 5B

DGN File: D:\StandardsandSpecsSection\2017Section\All Supp Issues\Issue # 6 08-30-2018\Drawings\CC05B.dgn
12-SEP-2018

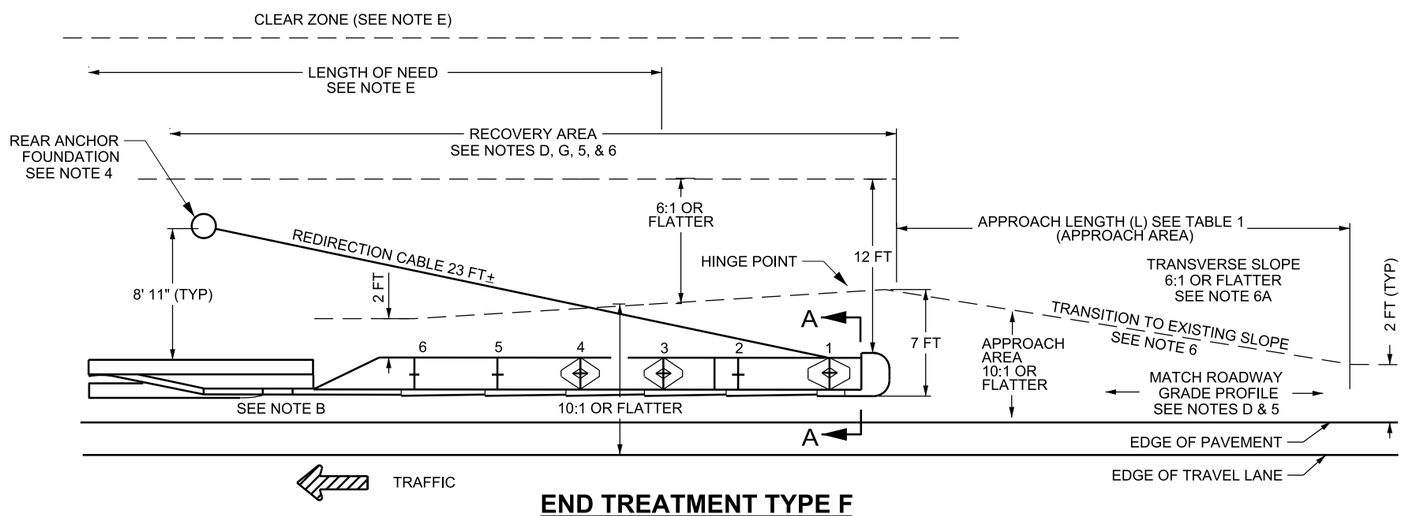


## END TREATMENT TYPE F

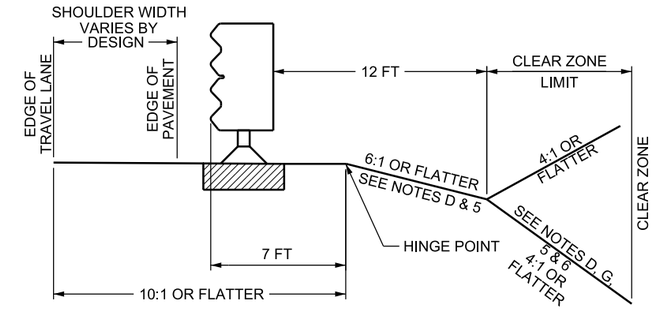


## TYPICAL SECTION A-A

| TABLE 1 | |
|---|---|
| SPEED MPH | MIN LENGTH (L) |
| LESS THAN 40 | 50 FT |
| 40 TO 55 | 70 FT |
| 60 TO 80 | 100 FT |

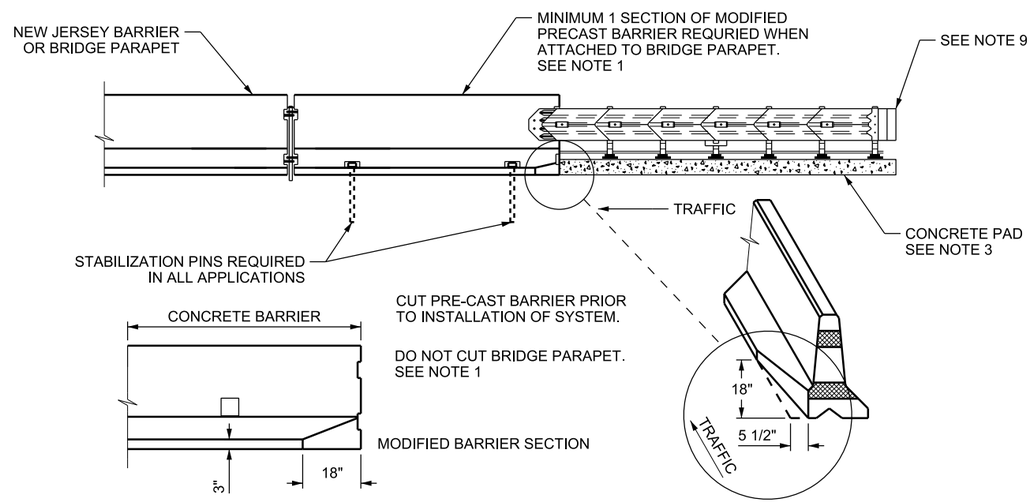


## USE THIS DETAIL WHEN SYSTEM IS INSTALLED WITH NEW JERSEY SHAPED BARRIER

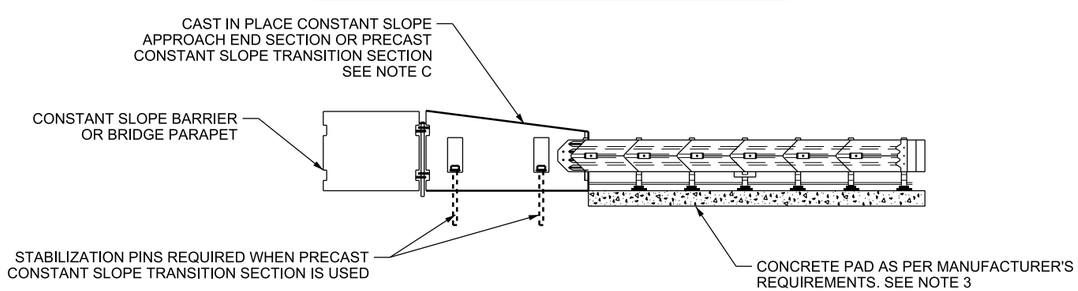


## USE THIS DETAIL WHEN SYSTEM IS INSTALLED WITH CONSTANT SLOPE BARRIER

**DESIGN-ONLY NOTES:**

A. THE QUADTREND-350 IS MANUFACTURED BY ENERGY ABSORPTION SYSTEMS, SEE GUIDELINES FOR CRASH CUSHIONS AND BARRIER END TREATMENTS FOR SPECIFIC SYSTEM DETAILS.
B. USE SYSTEM WHEN DIRECT ATTACHMENT TO BARRIER IS REQUIRED AND THE LONGITUDINAL SPACE IN FRONT OF THE HAZARD IS EQUAL TO THE REQUIRED MINIMUM APPROACH LENGTH AS STATED IN TABLE 1. INSTALL SYSTEM ACCORDING TO MANUFACTURER'S SPECIFICATIONS.
C. REFER TO BA 3 SERIES STD DWGS BEFORE ATTACHING CRASH CUSHION OR END TREATMENT TO CONSTANT SLOPE BARRIER. CONCRETE TRANSITION SECTION REQUIRED.
D. MEET SLOPE REQUIREMENTS IN RECOVERY AREA AS DETAILED IN APPLICABLE UDOT ROADWAY DESIGN MANUAL DRAWINGS. THE ADDITIONAL INFORMATION LISTED BELOW IS THE MINIMUM ACCEPTABLE SLOPE REQUIREMENTS FOR THE APPROACH AREA OF THE END TREATMENT AND THE RECOVERY AREA.
   1. APPROACH AREA: THE AREA PRIOR TO IMPACTING A SYSTEM.
      A) USE 10:1 OR FLATTER FORESLOPES IN APPROACH AREAS.
   2. A FORESLOPE AREA OF 12 FT x 25 FT AT 6:1 OR FLATTER REQUIRED FOR REAR ANCHOR FOUNDATION INSTALLATION
   3. RECOVERY AREA: THE AREA BEHIND THE END TREATMENT AND BARRIER SYSTEM EXTENDING FROM THE APPROACH END OF THE END TREATMENT TO THE END OF THE CALCULATED LENGTH OF NEED.
      A) USE A 4:1 OR FLATTER FORESLOPE OR BACKSLOPE IN RECOVERY AREA.
      B) USE A 3:1 FORESLOPE IN RECOVERY AREA IF IT IS IMPRACTICAL TO USE A 4:1 FORESLOPE. ESTABLISH A RECOVERY AREA AT THE TOE OF THE 3:1 FORESLOPE OF 6:1 OR FLATTER TO CLEAR ZONE LIMITS. REFER TO THE UDOT ROADWAY DESIGN MANUAL AND AASHTO ROADSIDE DESIGN GUIDE FOR ADDITIONAL INFORMATION.
      C) USE A 4:1 OR FLATTER BACKSLOPE IN RECOVERY AREA TO THE CLEAR ZONE LIMIT, IF A 4:1 OR FLATTER BACKSLOPE CANNOT BE PROVIDED A 3:1 IS ACCEPTABLE.
   3. MATCH ROADWAY GRADE PROFILE TO THE HEAD OF THE SYSTEM INSIDE THE APPROACH AREAS.
E. REFER TO THE AASHTO ROADSIDE DESIGN GUIDE TO ESTABLISH CLEAR ZONE AND LENGTH OF NEED (LON) REQUIREMENTS. LENGTH OF NEED BEGIN AT POST 3.
F. 2 FT MINIMUM BARRIER OFFSET IS OPTIONAL WHEN ROADWAY DESIGN REQUIRES A 12 FT OR WIDER EFFECTIVE SHOULDER.
G. DO NOT PLACE SIGNS, POSTS, OR OTHER HAZARDS IN APPROACH AREA. USE BREAKAWAY SIGNS OR POSTS WHEN PLACED IN RECOVERY AREA, AND MAINTAIN A MINIMUM 10 FT CLEARANCE TO THE SIDE AND 25 FT FROM THE REAR OF THE SYSTEM. MITIGATE POTENTIAL HAZARDS IN THE RECOVERY AREA.

**NOTES:**

1. CUT PRE-CAST NEW JERSEY BARRIER ACCORDING TO DETAIL, PRIOR TO INSTALLATION OF SYSTEM. SEAL CUT WITH THE SAME TYPE OF SEALER USED ON BARRIER. DO NOT CUT BRIDGE PARAPET, INSTALL 1 SECTION OF MODIFIED NEW JERSEY PRECAST BARRIER, CUT ACCORDING TO DETAIL. INSTALL STABILIZATION PINS IN BARRIER SECTION. MODIFICATION TO CONSTANT SLOPE BARRIER TRANSITION NOT REQUIRED, SEE BA 3 SERIES STD DWGS. THE REQUIRED BARRIER SECTIONS AND TRANSITION SECTION ARE A SEPARATE PAY ITEM FROM THE END TREATMENT.
2. HAVE SHOP DRAWING AVAILABLE ON SITE FOR REFERENCE DURING INSTALLATION.
3. INSTALL CONCRETE PAD ACCORDING TO MANUFACTURER'S REQUIREMENTS.
4. PLACE CABLE ANCHOR FOUNDATION IN SUCH A MANNER THAT THE REDIRECTING CABLE LAYS 6:1 OR FLATTER ON TOP OF THE GROUND, AND THE FOUNDATION WITH THE CABLE ANCHOR BRACKET ATTACHED DOES NOT EXCEED 4 INCHES ABOVE GROUND LEVEL. DO NOT BURY REDIRECTION CABLE.
5. COMPLETE SLOPE PREPARATION BEFORE INSTALLING SYSTEM.
6. CONSTRUCT PLATFORM AS REQUIRED WHEN THE SPACE IS AVAILABLE EVEN IF THE PLATFORM EXTENDS BEYOND THE CLEAR ZONE REQUIREMENTS.
   A) CONSTRUCT 6:1 OR FLATTER SLOPE FOR TRANSVERSE SLOPE FROM APPROACH PAD.
7. CLEAR RECOVERY AND APPROACH AREAS OF ANY FIXED OBJECTS OR HAZARDS.
8. ATTACH SAND CONTAINERS AT POSTS 1, 3 AND 4.
9. INSTALL REQUIRED MARKING ACCORDING TO STD DWG CC 1.

SUPPLEMENTAL DRAWING

REVISIONS

| NO. | DATE | APPR. | REMARKS |
|---|---|---|---|
| | | | |

UTAH DEPARTMENT OF TRANSPORTATION
STANDARD DRAWINGS FOR ROAD AND BRIDGE CONSTRUCTION
SALT LAKE CITY, UTAH

RECOMMENDED FOR APPROVAL — AUG 30, 2018 DATE
CHAIRMAN STANDARDS COMMITTEE APPROVED — AUG 30, 2018 DATE
DEPUTY DIRECTOR

GRADING AND INSTALLATION DETAILS
END TREATMENT TYPE F
QUAD TREND 350
STANDARD DRAWING TITLE

STD. DWG. NO.
CC 7A

DGN File: D:\StandardsandSpecsSection\2017Section\All Supp Issues\Issue # 6 08-30-2018\Drawings\CC07A.dgn
12-SEP-2018

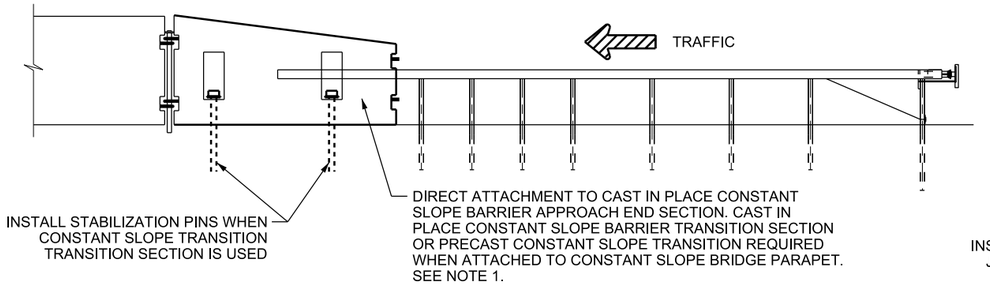


## DETAIL WHEN SYSTEM IS INSTALLED WITH CONSTANT SLOPE BARRIER

(GROUND MOUNTED POST SHOWN, SURFACE MOUNTED STEEL BREAKAWAY POST ACCEPTABLE, SEE NOTE 3)

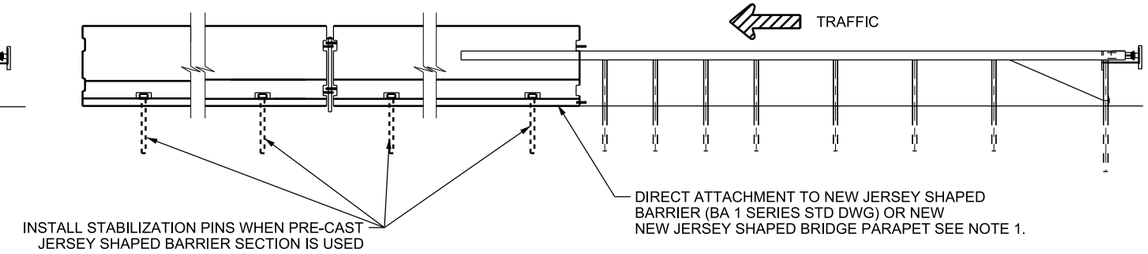


## DETAIL WHEN SYSTEM IS INSTALLED WITH NEW JERSEY SHAPED BARRIER

(GROUND MOUNTED POST SHOWN, SURFACE MOUNTED STEEL BREAKAWAY POST ACCEPTABLE, SEE NOTE 3)

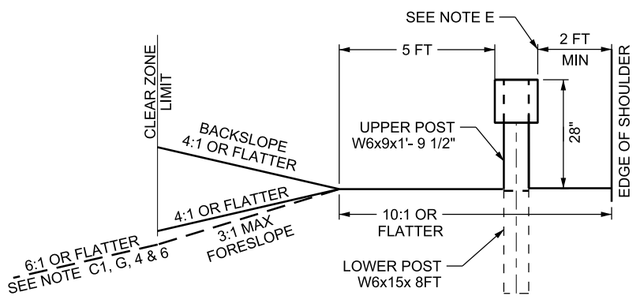


## SECTION A-A

POST 1

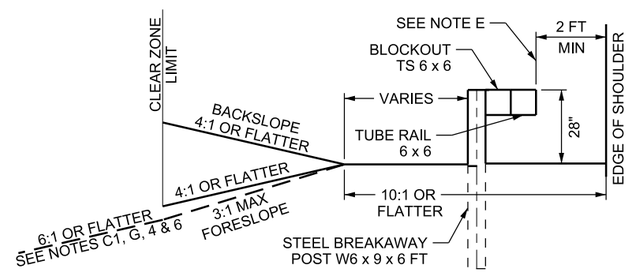


## SECTION B-B

POSTS 2 TO POST 6

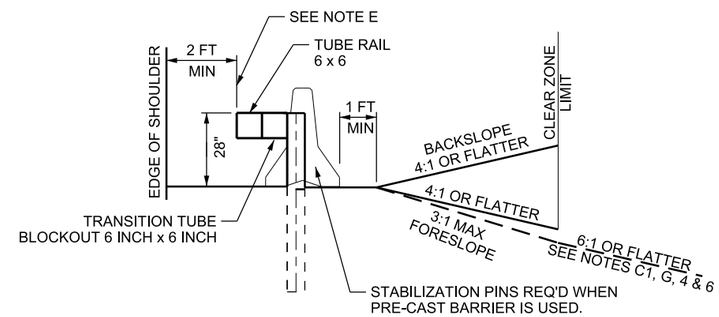


## SECTION C-C

POSTS 7-8

| TABLE 1 | |
|---|---|
| SPEED MPH | MIN LENGTH (L) |
| LESS THAN 40 | 50 FT |
| 40 TO 55 | 70 FT |
| 60 TO 80 | 100 FT |

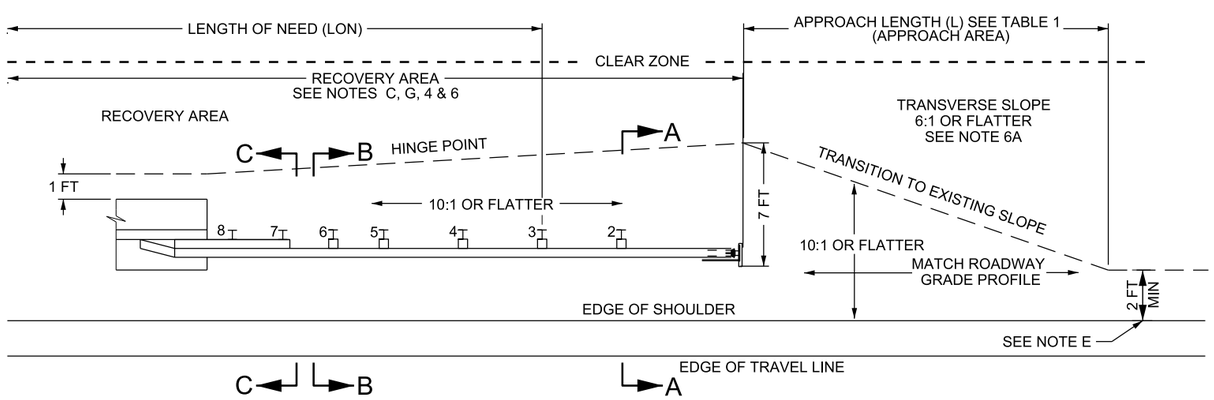


## TYPE F END TREATMENT PLAN

SUPPLEMENTAL DRAWING

**DESIGN-ONLY NOTES:**

A. THE BEAT-SSCC, MANUFACTURED BY ROAD SYSTEMS INC. SEE GUIDELINES FOR CRASH CUSHIONS & BARRIER END TREATMENTS FOR SPECIFIC SYSTEM DETAILS.
B. USE SYSTEM WHEN DIRECT ATTACHMENT TO BARRIER IS REQUIRED AND THERE IS MORE THAN 125 FT OF LONGITUDINAL SPACE IN FRONT OF THE HAZARD. INSTALL SYSTEM ACCORDING TO MANUFACTURER'S SPECIFICATIONS.
C. MEET SLOPE REQUIREMENTS IN RECOVERY AREA AS DETAILED IN APPLICABLE UDOT ROADWAY DESIGN MANUAL DRAWINGS. THE ADDITIONAL INFORMATION LISTED BELOW IS THE MINIMUM ACCEPTABLE SLOPE REQUIREMENTS FOR THE APPROACH AREA OF THE END TREATMENT AND THE RECOVERY AREA.
   1. APPROACH AREA: THE AREA PRIOR TO IMPACTING A SYSTEM.
      A) USE 10:1 OR FLATTER FORESLOPES IN APPROACH AREAS.
   2. RECOVERY AREA: THE AREA BEHIND THE END TREATMENT AND BARRIER SYSTEM EXTENDING FROM THE APPROACH END OF THE END TREATMENT TO THE END OF THE CALCULATED LENGTH OF NEED.
      A) USE A 4:1 OR FLATTER FORESLOPE OR BACKSLOPE IN RECOVERY AREA.
      B) USE A 3:1 FORESLOPE IN RECOVERY AREA IF IT IS IMPRACTICAL TO USE A 4:1 FORESLOPE. ESTABLISH A RECOVERY AREA AT THE TOE OF THE 3:1 FORESLOPE OF 6:1 OR FLATTER TO CLEAR ZONE LIMITS. REFER TO THE UDOT ROADWAY DESIGN MANUAL AND AASHTO ROADSIDE DESIGN GUIDE FOR ADDITIONAL INFORMATION.
      C) USE A 4:1 OR FLATTER BACKSLOPE IN RECOVERY AREA TO THE CLEAR ZONE LIMIT, IF A 4:1 OR FLATTER BACKSLOPE CANNOT BE PROVIDED A 3:1 IS ACCEPTABLE.
   3. MATCH ROADWAY GRADE PROFILE TO THE HEAD OF THE SYSTEM INSIDE THE APPROACH AREAS.
D. REFER TO THE AASHTO ROADSIDE DESIGN GUIDE TO DETERMINE LENGTH OF NEED (LON) AND CLEAR ZONE REQUIREMENTS.
E. 2 FT MINIMUM BARRIER OFFSET IS OPTIONAL WHEN ROADWAY DESIGN REQUIRES A 12 FT OR WIDER EFFECTIVE SHOULDER.
F. DO NOT PLACE SIGNS, POSTS, OR OTHER HAZARDS IN APPROACH AREA. USE BREAKAWAY SIGNS OR POSTS WHEN PLACED IN RECOVERY AREA, AND MAINTAIN A MINIMUM 10 FT CLEARANCE TO THE SIDE AND 25 FT FROM THE REAR OF THE SYSTEM. MITIGATE POTENTIAL HAZARDS IN THE RECOVERY AREA.

**NOTES:**

1. ATTACH SYSTEM TRANSITION TO BARRIER OR BRIDGE PARAPET ACCORDING TO MANUFACTURER'S REQUIREMENTS. MODIFICATION NOT REQUIRED FOR NEW JERSEY STYLE BARRIERS OR PARAPETS. REFER TO BA 3 SERIES STD DWGS BEFORE ATTACHING CRASH CUSHION OR END TREATMENT TO CONSTANT SLOPE BARRIER. CONCRETE TRANSITION SECTION REQUIRED.
2. HAVE SHOP DRAWING AVAILABLE ON SITE FOR REFERENCE DURING INSTALLATION.
3. THE BEAT-SSCC REQUIRES A GRADED AND COMPACTED SURFACE WHEN GROUND MOUNTED POSTS ARE USED. SURFACE MOUNTED POST OPTIONAL, USE MANUFACTURER'S SPECIFICATIONS FOR CONCRETE PAD, POSTS AND MOUNTING HARDWARE.
4. COMPLETE SLOPE PREPARATION PRIOR TO INSTALLING SYSTEM.
5. CLEAR RECOVERY AND APPROACH AREAS OF ANY FIXED OBJECTS OR HAZARDS.
6. CONSTRUCT PLATFORM AS REQUIRED WHEN THE SPACE IS AVAILABLE EVEN IF THE PLATFORM EXTENDS BEYOND THE CLEAR ZONE REQUIREMENTS.
   A) CONSTRUCT 6:1 OR FLATTER SLOPE FOR TRANSVERSE SLOPE FROM APPROACH PAD.
7. INSTALL REQUIRED MARKERS ACCORDING TO STD DWG CC 1, TYPE F.

REVISIONS

| NO. | DATE | APPR. | REMARKS |
|---|---|---|---|
| | | | |

**UTAH DEPARTMENT OF TRANSPORTATION**
STANDARD DRAWINGS FOR ROAD AND BRIDGE CONSTRUCTION
SALT LAKE CITY, UTAH

RECOMMENDED FOR APPROVAL — AUG 30, 2018 DATE
CHAIRMAN STANDARDS COMMITTEE APPROVED — AUG 30, 2018 DATE
DEPUTY DIRECTOR

GRADING AND INSTALLATION DETAILS END TREATMENT TYPE F BEAT-SSCC

STANDARD DRAWING TITLE

STD. DWG. NO.
CC 7B

DGN File: Q:\StandardsandSpecsSection\2017Section\All Supp Issues\Issue # 6 08-30-2018\Drawings\CC07B.dgn
12-SEP-2018

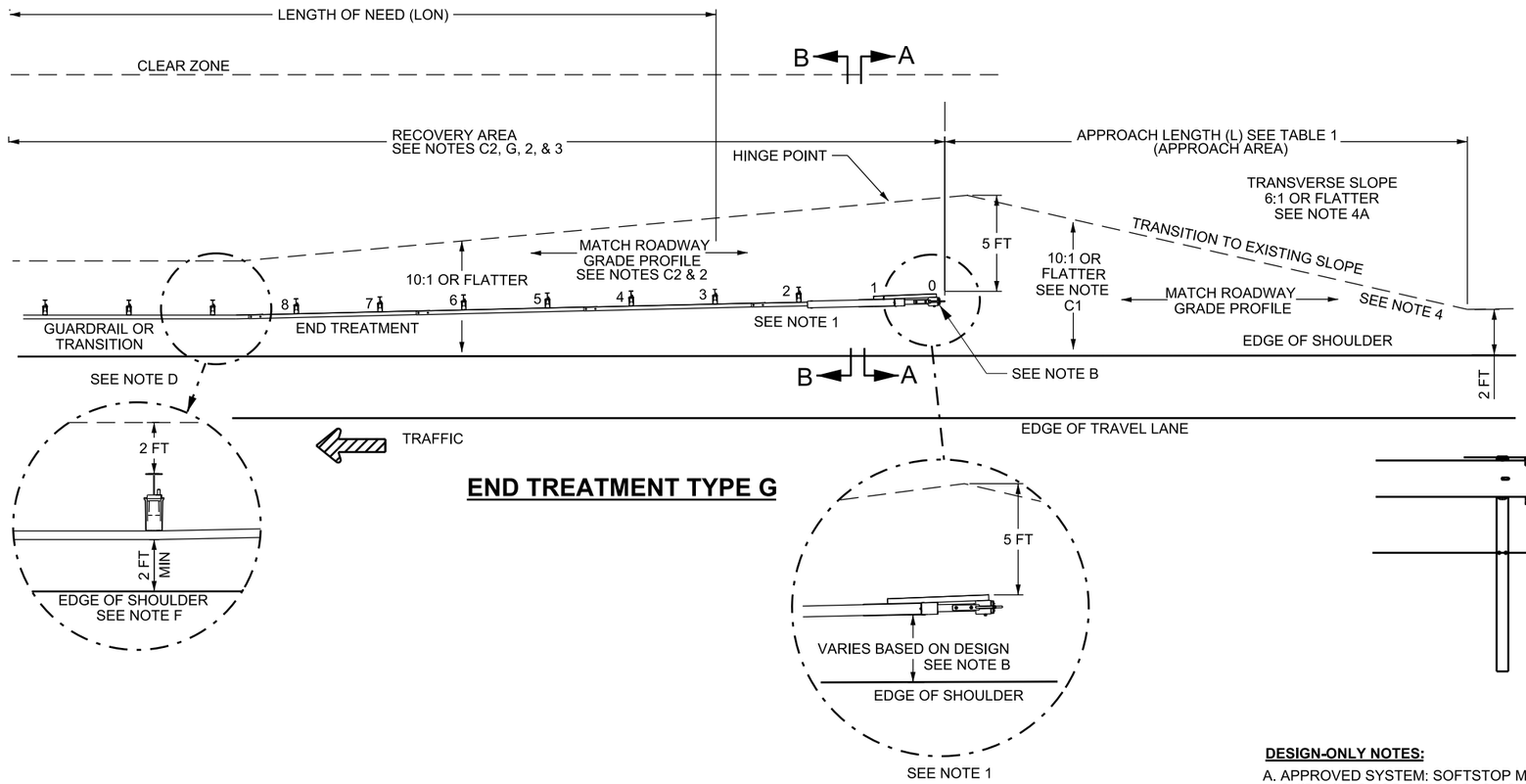


## END TREATMENT TYPE G

| TABLE 1 | |
|---|---|
| SPEED MPH | MIN LENGTH (L) |
| LESS THAN 40 | 50 FT |
| 40 TO 55 | 70 FT |
| 60 TO 80 | 100 FT |

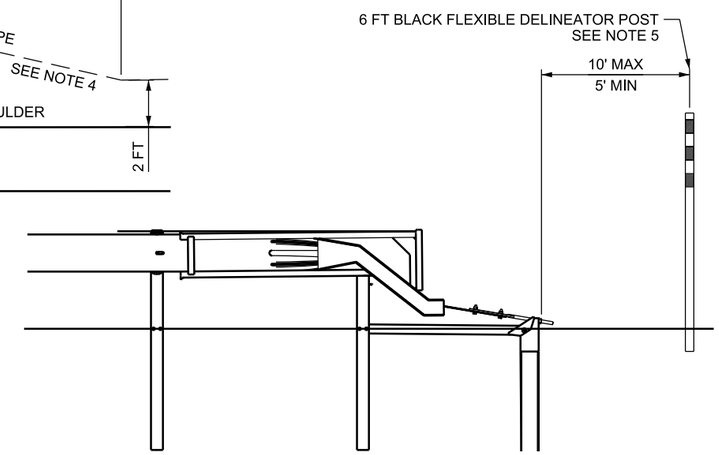


## SYSTEM DELINEATION

SEE NOTE 5

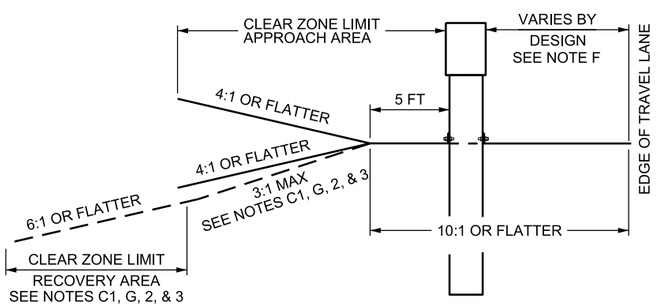


## TYPICAL SECTION A-A

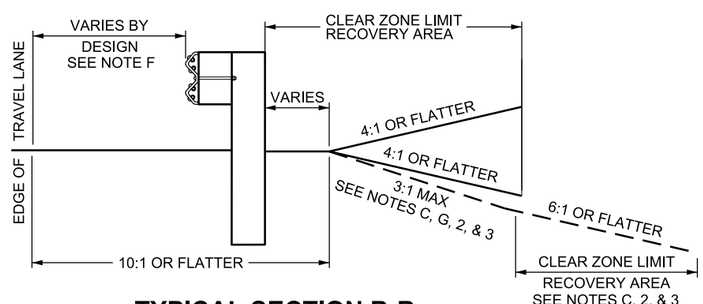


## TYPICAL SECTION B-B

**DESIGN-ONLY NOTES:**

A. APPROVED SYSTEM: SOFTSTOP MANUFACTURED BY TRINITY HIGHWAY PRODUCTS, LLC . REFER TO UDOT GUIDELINES FOR CRASH CUSHIONS AND BARRIER END TREATMENTS FOR SPECIFIC SYSTEM DETAILS.
B. SYSTEM OFFSET:
  1. INSTALL SYSTEM WITH 2 FT OFFSET (25:1 FLARE RATE). SYSTEM TO BE INSTALLED WITH TANGENT BARRIER.
  2. SEE MANUFACTURER'S INSTALLATION MANUAL WHEN DESIGNING FOR A CONVEX OR CONCAVE CURVE.
C. MEET SLOPE REQUIREMENTS IN RECOVERY AREA AS DETAILED IN APPLICABLE UDOT ROADWAY DESIGN MANUAL DWGS. THE ADDITIONAL INFORMATION LISTED BELOW IS THE MINIMUM ACCEPTABLE SLOPE REQUIREMENTS FOR THE APPROACH AREA OF THE END TREATMENT AND THE RECOVERY AREA.
  1. APPROACH AREA: THE AREA PRIOR TO IMPACTING A SYSTEM.
    A) USE 10:1 OR FLATTER FORESLOPES IN APPROACH AREAS.
  2. RECOVERY AREA: THE AREA BEHIND THE END TREATMENT AND BARRIER SYSTEM EXTENDING FROM THE APPROACH END OF THE END TREATMENT TO THE END OF THE CALCULATED LENGTH OF NEED.
    A) USE A 4:1 OR FLATTER FORESLOPE OR BACKSLOPE IN RECOVERY AREA.
    B) USE A 3:1 FORESLOPE IN RECOVERY AREA IF IT IS IMPRACTICAL TO USE A 4:1 FORESLOPE. ESTABLISH A RECOVERY AREA AT THE TOE OF THE 3:1 FORESLOPE OF 6:1 OR FLATTER TO CLEAR ZONE LIMITS. REFER TO THE UDOT ROADWAY DESIGN MANUAL AND AASHTO ROADSIDE DESIGN GUIDE FOR ADDITIONAL INFORMATION.
    C) USE A 4:1 OR FLATTER BACKSLOPE IN RECOVERY AREA TO THE CLEAR ZONE LIMIT, IF A 4:1 OR FLATTER BACKSLOPE CANNOT BE PROVIDED A 3:1 IS ACCEPTABLE.
  3. MATCH ROADWAY GRADE PROFILE TO THE HEAD OF THE SYSTEM INSIDE THE APPROACH AREAS.
D. USE GUARDRAIL TRANSITION, BA 4 SERIES STD DWGS, WHEN ATTACHING SYSTEM TO CONCRETE BARRIER OR BRIDGE PARAPET.
E. USE THE AASHTO ROADSIDE DESIGN GUIDE TO ESTABLISH CLEAR ZONE REQUIREMENTS AND LENGTH OF NEED (LON) REQUIREMENTS.
F. 2 FT MINIMUM BARRIER OFFSET IS OPTIONAL WHEN ROADWAY DESIGN REQUIRES A 12 FT OR WIDER EFFECTIVE SHOULDER.
G. DO NOT PLACE SIGNS, POSTS, OR OTHER HAZARDS IN APPROACH AREA. USE BREAKAWAY SIGNS OR POSTS WHEN PLACED IN RECOVERY AREA, AND MAINTAIN A MINIMUM 10 FT CLEARANCE TO THE SIDE AND 25 FT FROM THE REAR OF THE SYSTEM. MITIGATE POTENTIAL HAZARDS IN THE RECOVERY AREA.

**NOTES:**

1. REFER TO MANUFACTURER'S SPECIFICATIONS FOR POST, RAIL ELEMENT, AND POST TO RAIL CONNECTION REQUIREMENTS. HAVE SHOP DRAWING AVAILABLE ON SITE FOR REFERENCE DURING INSTALLATION
2. COMPLETE SLOPE PREPARATION PRIOR TO INSTALLING SYSTEM.
3. CLEAR RECOVERY AND APPROACH AREAS OF ANY FIXED OBJECTS OR HAZARDS.
4. CONSTRUCT PLATFORM AS REQUIRED WHEN THE SPACE IS AVAILABLE EVEN IF THE PLATFORM EXTENDS BEYOND THE CLEAR ZONE REQUIREMENTS. SEE STD DWG CC 8C FOR EXCEPTIONS.
  A) CONSTRUCT 6:1 OR FLATTER SLOPE FOR TRANSVERSE SLOPE FROM APPROACH PAD.
5. DO NOT MOUNT OBJECT MARKER ON THE SOFTSTOP SYSTEM.
  A) INSTALL A 6 FT BLACK FLEXIBLE MARKER POST ACCORDING TO SYSTEM DELINEATION DETAIL. PLACE YELLOW BANDS OF REFLECTIVE SHEETING AS SPECIFIED BY STANDARD SPECIFICATION, PART 2 AT THE TOP OF THE POST WITH A 2 INCH SPACE BETWEEN THE 1ST AND 2ND BAND AND THE 2ND AND 3RD BAND.

SUPPLEMENTAL DRAWING

REVISIONS

| NO. | DATE | APPR. | REMARKS |
|---|---|---|---|
| | | | |

UTAH DEPARTMENT OF TRANSPORTATION
STANDARD DRAWINGS FOR ROAD AND BRIDGE CONSTRUCTION
SALT LAKE CITY, UTAH

RECOMMENDED FOR APPROVAL — AUG 30, 2018 DATE
CHAIRMAN STANDARDS COMMITTEE APPROVED — AUG 30, 2018 DATE
DEPUTY DIRECTOR

GRADING AND INSTALLATION DETAILS
SOFTSTOP
END TREATMENT
TYPE G (MASH)

STANDARD DRAWING TITLE

STD. DWG. NO.
CC 8A

DGN File: Q:\Standardsand\Specs\Section\2017Section\All Supp Issues\Issue # 6 08-30-2018\Drawings\CC08A.dgn
12-SEP-2018

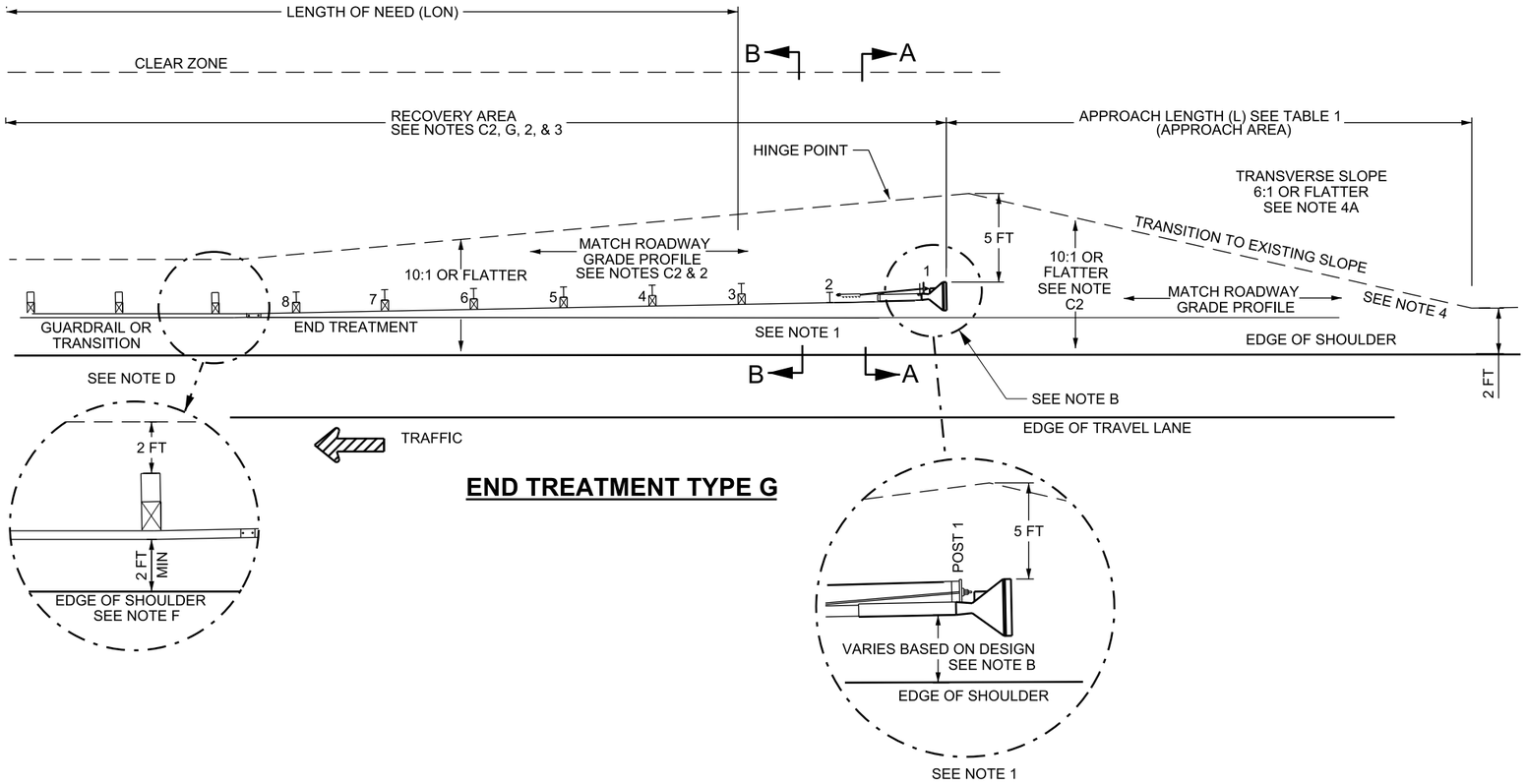


## END TREATMENT TYPE G

| TABLE 1 | |
|---|---|
| SPEED MPH | MIN LENGTH (L) |
| LESS THAN 40 | 50 FT |
| 40 TO 55 | 70 FT |
| 60 TO 80 | 100 FT |

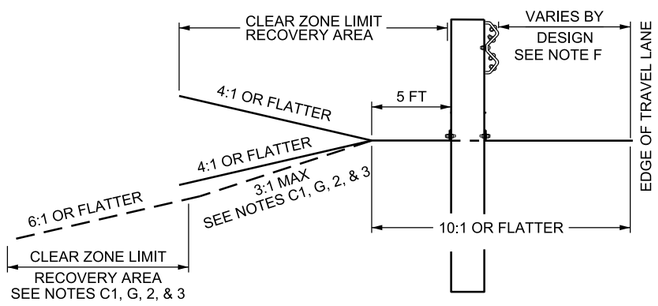


## TYPICAL SECTION A-A

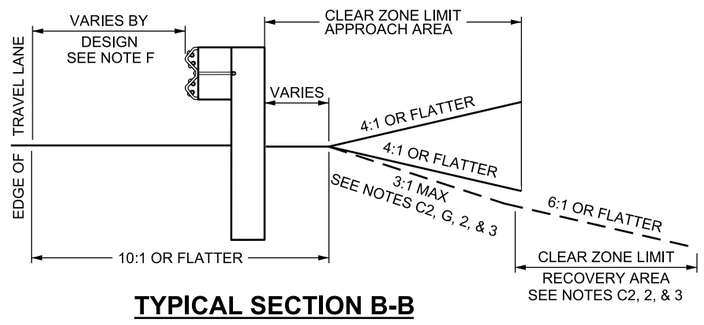


## TYPICAL SECTION B-B

**DESIGN-ONLY NOTES:**

A. APPROVED SYSTEM: MSKT-SP-MGS MANUFACTURED BY ROAD SYSTEMS, INC. REFER TO UDOT GUIDELINES FOR CRASH CUSHIONS AND BARRIER END TREATMENTS FOR SPECIFIC SYSTEM DETAILS.
B. INSTALL SYSTEM WITH 2 FT OFFSET (25:1 FLARE RATE). SYSTEM TO BE INSTALLED WITH TANGENT BARRIER.
C. MEET SLOPE REQUIREMENTS IN RECOVERY AREA AS DETAILED IN APPLICABLE UDOT ROADWAY DESIGN MANUALS DWGS. THE ADDITIONAL INFORMATION LISTED BELOW IS THE MINIMUM ACCEPTABLE SLOPE REQUIREMENTS FOR THE APPROACH AREA OF THE END TREATMENT AND THE RECOVERY AREA.
   1. APPROACH AREA: THE AREA PRIOR TO IMPACTING A SYSTEM.
      A) USE 10:1 OR FLATTER FORESLOPES IN APPROACH AREAS.
   2. RECOVERY AREA: THE AREA BEHIND THE END TREATMENT AND BARRIER SYSTEM EXTENDING FROM THE APPROACH END OF THE END TREATMENT TO THE END OF THE CALCULATED LENGTH OF NEED.
      A) USE A 4:1 OR FLATTER FORESLOPE OR BACKSLOPE IN RECOVERY AREA.
      B) USE A 3:1 FORESLOPE IN RECOVERY AREA IF IT IS IMPRACTICAL TO USE A 4:1 FORESLOPE. ESTABLISH A RECOVERY AREA AT THE TOE OF THE 3:1 FORESLOPE OF 6:1 OR FLATTER TO CLEAR ZONE LIMITS. REFER TO THE UDOT ROADWAY DESIGN MANUAL AND AASHTO ROADSIDE DESIGN GUIDE FOR ADDITIONAL INFORMATION.
      C) USE A 4:1 OR FLATTER BACKSLOPE IN RECOVERY AREA TO THE CLEAR ZONE LIMIT, IF A 4:1 OR FLATTER BACKSLOPE CANNOT BE PROVIDED A 3:1 IS ACCEPTABLE.
   3. MATCH ROADWAY GRADE PROFILE TO THE HEAD OF THE SYSTEM INSIDE THE APPROACH AREAS.
D. USE GUARDRAIL TRANSITION, BA 4 SERIES STD DWGS, WHEN ATTACHING SYSTEM TO CONCRETE BARRIER OR BRIDGE PARAPET.
E. USE THE AASHTO ROADSIDE DESIGN GUIDE TO ESTABLISH CLEAR ZONE REQUIREMENTS AND LENGTH OF NEED (LON) REQUIREMENTS.
F. 2 FT MINIMUM BARRIER OFFSET IS OPTIONAL WHEN ROADWAY DESIGN REQUIRES A 12 FT OR WIDER EFFECTIVE SHOULDER.
G. DO NOT PLACE SIGNS, POSTS, OR OTHER HAZARDS IN APPROACH AREA. USE BREAKAWAY SIGNS OR POSTS WHEN PLACED IN RECOVERY AREA, AND MAINTAIN A MINIMUM 10 FT CLEARANCE TO THE SIDE AND 25 FT FROM THE REAR OF THE SYSTEM. MITIGATE POTENTIAL HAZARDS IN THE RECOVERY AREA.

**NOTES:**

1. REFER TO MANUFACTURER'S SPECIFICATIONS FOR POST, RAIL ELEMENT, AND POST TO RAIL CONNECTION REQUIREMENTS. HAVE SHOP DRAWING AVAILABLE ON SITE FOR REFERENCE DURING INSTALLATION
2. COMPLETE SLOPE PREPARATION PRIOR TO INSTALLING SYSTEM.
3. CLEAR RECOVERY AND APPROACH AREAS OF ANY FIXED OBJECTS OR HAZARDS.
4. CONSTRUCT PLATFORM AS REQUIRED WHEN THE SPACE IS AVAILABLE EVEN IF THE PLATFORM EXTENDS BEYOND THE CLEAR ZONE REQUIREMENTS. SEE STD DWG CC 8C FOR EXCEPTIONS.
   A) CONSTRUCT 6:1 OR FLATTER SLOPE FOR TRANSVERSE SLOPE FROM APPROACH PAD.
5. MOUNT OBJECT MARKER POST PER STD DWG CC 1 END TREATMENT TYPE G.

SUPPLEMENTAL DRAWING

REVISIONS

| NO. | DATE | APPR. | REMARKS |
|---|---|---|---|

UTAH DEPARTMENT OF TRANSPORTATION
STANDARD DRAWINGS FOR ROAD AND BRIDGE CONSTRUCTION
SALT LAKE CITY, UTAH

RECOMMENDED FOR APPROVAL — AUG 30, 2018 DATE
CHAIRMAN STANDARDS COMMITTEE APPROVED — AUG 30, 2018 DATE
DEPUTY DIRECTOR

GRADING AND INSTALLATION DETAILS MSKT-SP-MGS END TREATMENT TYPE G (MASH)

STANDARD DRAWING TITLE

STD. DWG. NO.
CC 8B

DGN File: D:\Standards\Specs\Section\2017Section\All Supp Issues\Issue # 6 08-30-2018\Drawings\CC08B.dgn
12-SEP-2018

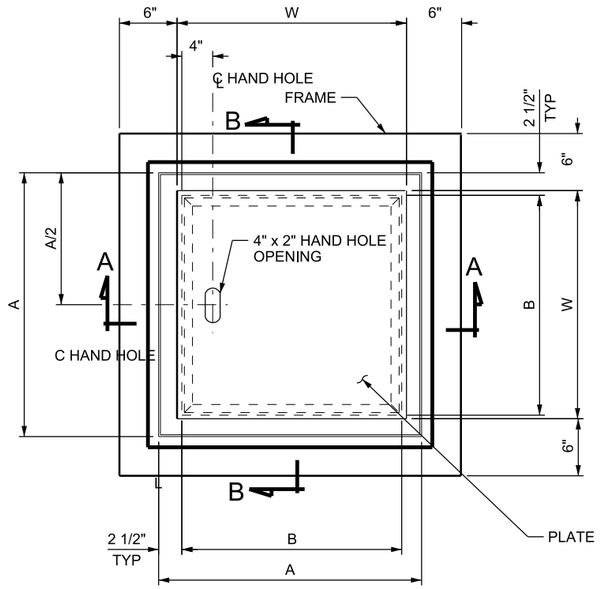


**COVER PLAN**

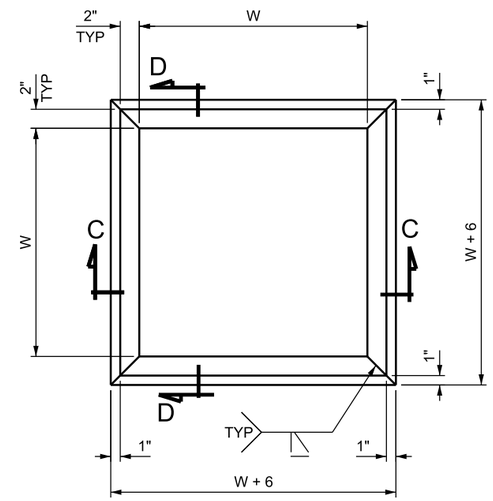


**PLAN**

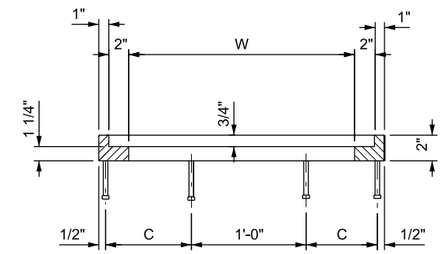


**SECTION C-C or D-D**

# FRAME DETAILS

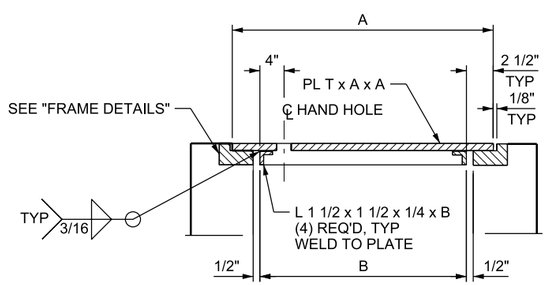


**SECTION A-A**

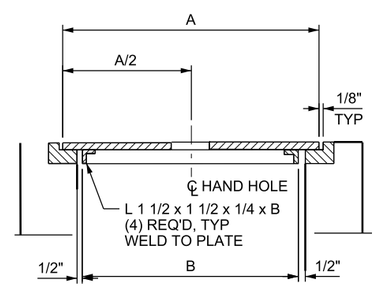


**SECTION B-B**

| DIMENSIONS | | | | | QUANTITIES (LB) | | |
|---|---|---|---|---|---|---|---|
| W | A | B | C | T | COVER | FRAME | TOTAL |
| 2'- 0" | 2'- 3 3/4" | 1'- 10 3/4" | 8 1/2" | 1/2" | 131 | 163 | 294 |
| 2'- 6" | 2'- 9 3/4" | 2'- 4 3/4" | 11 1/2" | 5/8" | 189 | 195 | 384 |

**DESIGN DATA**

STRUCTURAL STEEL: Fy = 36,000 psi

**NOTES:**

1. ALL STRUCTURAL STEEL: STRUCTURAL CARBON STEEL CONFORMING TO AASHTO M 270, GRADE 36, AND HOT DIP GALVANIZE AFTER FABRICATION IN ACCORDANCE WITH ASTM A 123.

2. USE SOLID COVER ONLY IN APPLICATIONS THAT WILL NOT CARRY TRAFFIC.

SUPPLEMENTAL DRAWING

REVISIONS

| NO. | DATE | APPR. | REMARKS |
|---|---|---|---|
| 1 | 8/30/2018 | JGE | REMOVED DESIGN INFORMATION FROM THE DRAWING. |

**UTAH DEPARTMENT OF TRANSPORTATION**
STANDARD DRAWINGS FOR ROAD AND BRIDGE CONSTRUCTION
SALT LAKE CITY, UTAH

RECOMMENDED FOR APPROVAL — AUG. 30, 2018 DATE
CHAIRMAN STANDARDS COMMITTEE APPROVED — AUG. 30, 2018 DATE
DEPUTY DIRECTOR

STANDARD DRAWING TITLE: SOLID COVER FOR STD DWG DB 1

STD. DWG. NO. DB 1G

DGN File:Q:\StandardsandSpecsSection\2017Section\All Supp Issues\Issue # 6 08-30-2018\Drawings\DB01G.dgn
12-SEP-2018

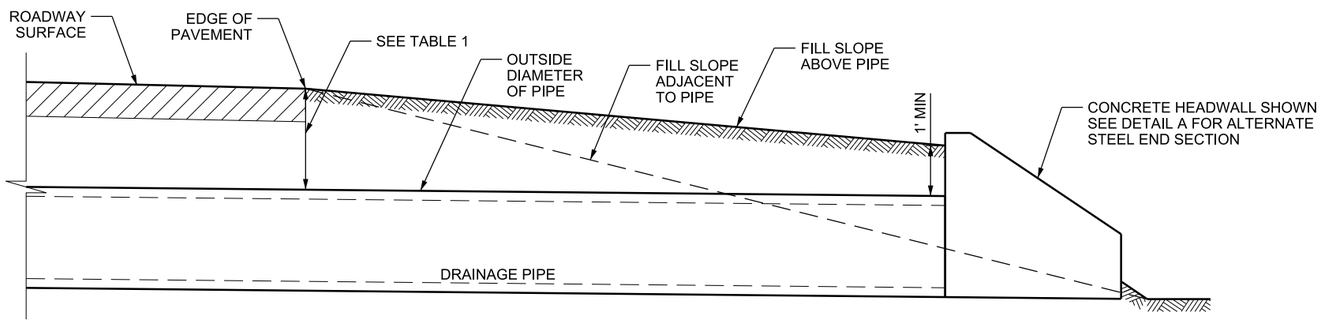


ELEVATION

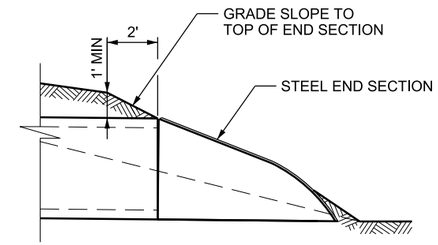


DETAIL A

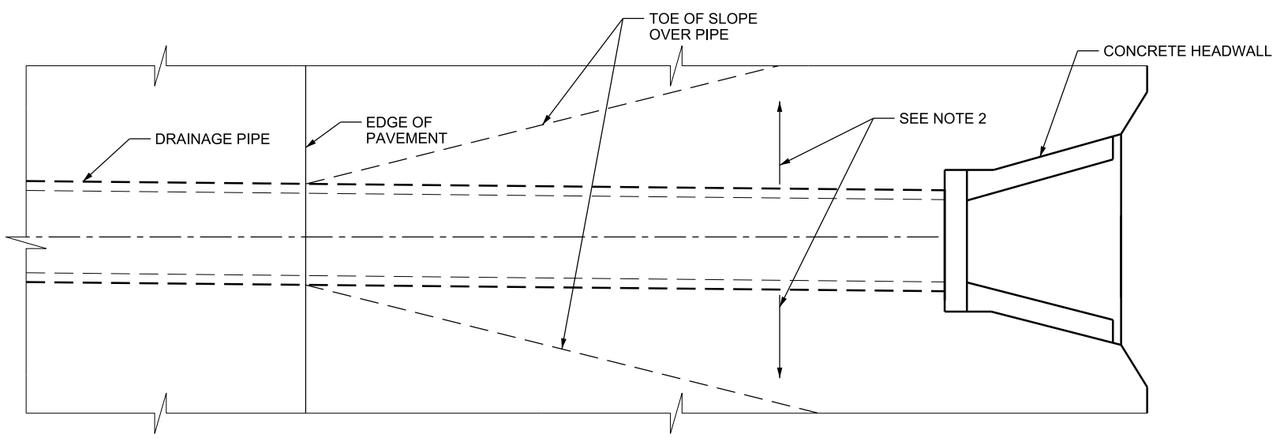


PLAN

TABLE 1. MINIMUM PIPE FILL HEIGHT UNDER ROADWAY SURFACE

| ROADWAY SURFACE TYPE | PIPE TYPE | | |
|---|---|---|---|
| | CIRCULAR AND ELLIPTICAL REINFORCED CONCRETE | CIRCULAR THERMOPLASTIC * | CIRCULAR AND ARCH CORRUGATED STEEL |
| FLEXIBLE PAVEMENT OR UNPAVED | 1' - 6" | 2' | 2' |
| RIGID PAVEMENT | 1' - 6" | 1' - 6" | 1' - 6" |

* MINIMUM FILL HEIGHT FOR THERMOPLASTIC PIPE LARGER THAN 48 INCH DIAMETER IS HALF THE PIPE DIAMETER (D/2).

**NOTES:**

1. MINIMUM FILL HEIGHT IS ADEQUATE ONLY FOR FINISHED CONSTRUCTION. PROVIDE ADEQUATE COVER TO PROTECT PIPE FROM DAMAGE DURING CONSTRUCTION.
2. GRADE FILL SLOPES OVER THE PIPE TO MEET CLEAR ZONE REQUIREMENTS OR NO STEEPER THAN 4:1 (H:V).

SUPPLEMENTAL DRAWING

REVISIONS

| NO. | DATE | APPR. | REMARKS |
|---|---|---|---|
| 1 | 8/30/2018 | JGE | REMOVED DESIGN INFORMATION FROM THE DRAWING. |

**UTAH DEPARTMENT OF TRANSPORTATION**
STANDARD DRAWINGS FOR ROAD AND BRIDGE CONSTRUCTION
SALT LAKE CITY, UTAH

RECOMMENDED FOR APPROVAL — AUG.30, 2018 DATE
CHAIRMAN STANDARDS COMMITTEE APPROVED — AUG.30, 2018 DATE
DEPUTY DIRECTOR

MINIMUM FILL HEIGHT FOR DRAINAGE PIPE

STANDARD DRAWING TITLE

STD. DWG. NO.
DG 4

DGN File:Q:\Standards&SpecsSection\2017Section\All Supp Issues\Issue # 6 08-30-2018\Drawings\DG04.dgn
12-SEP-2018

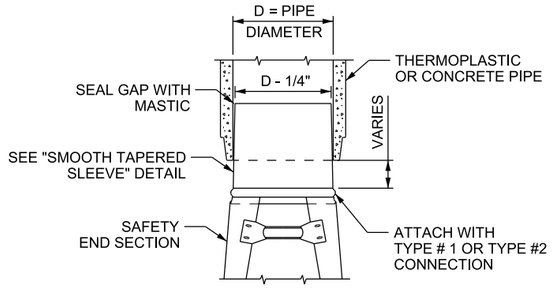


## THERMOPLASTIC OR CONCRETE PIPE CONNECTION

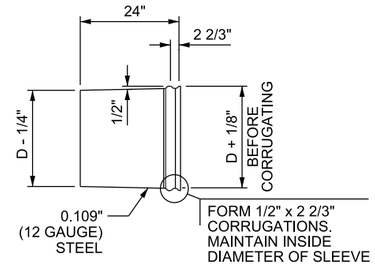


## SMOOTH TAPERED SLEEVE

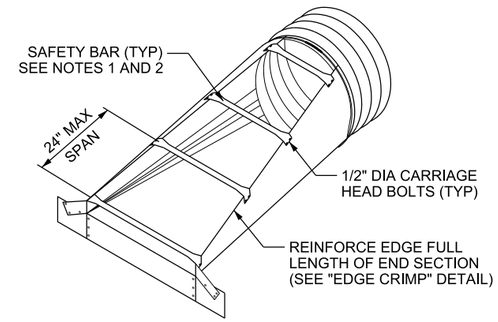


## SAFETY END SECTION - PARALLEL

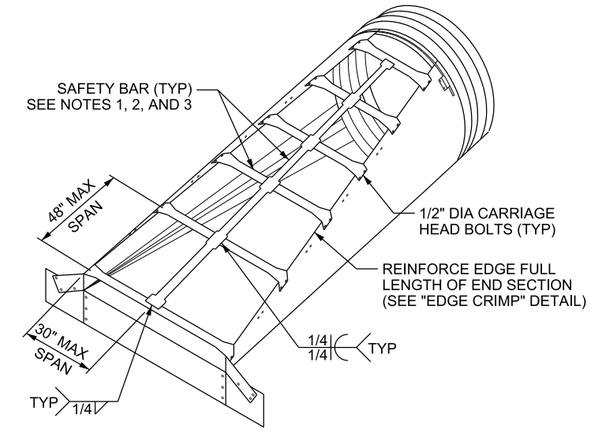


## SAFETY END SECTION - CROSSING

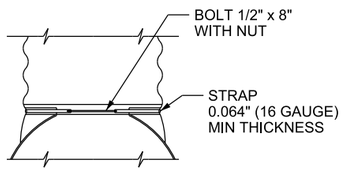


**TYPE #1 CONNECTOR**

FOR USE ON CORRUGATED METAL PIPE ≤ 24" DIA

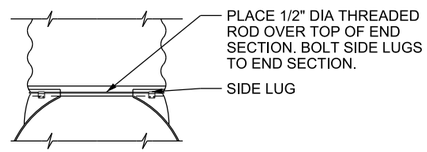


**TYPE #2 CONNECTOR**

FOR USE ON CORRUGATED METAL PIPE ≥ 30" DIA

## CORRUGATED METAL PIPE CONNECTION

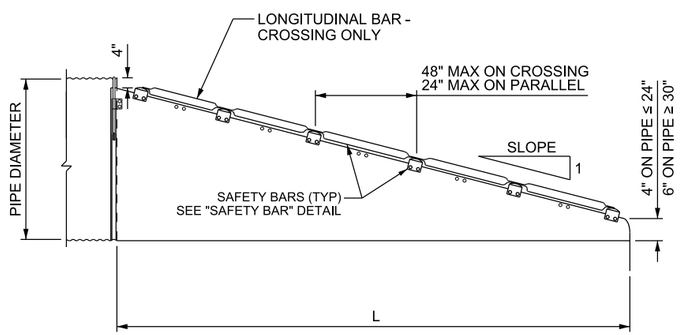


## SAFETY END SECTION - ELEVATION

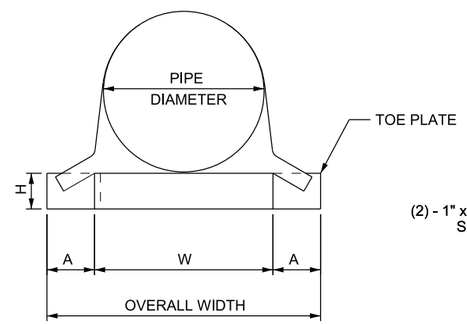


## SAFETY END SECTION FRONT VIEW

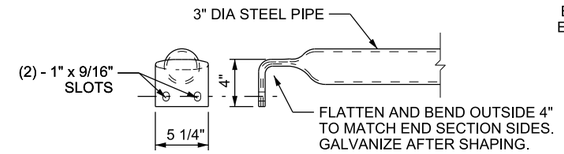


## SAFETY BAR

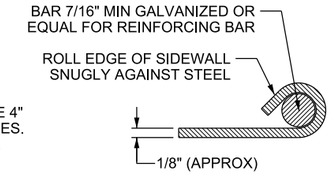


## EDGE CRIMP

**STEEL SAFETY END SECTIONS FOR ELLIPTICAL PIPE**

| PIPE SIZE (INCHES) | | MIN METAL THICK INCH/GAUGE | DIMENSIONS (INCHES) | | | | | |
|---|---|---|---|---|---|---|---|---|
| SPAN X RISE | EQUIV DIA | | | H | W | OVERALL WIDTH | L | |
| | | | | | | | SLOPE = 4 | SLOPE = 6 |
| 23 X 14 | 18 | 0.064/16 | 8 | 6 | 29 | 45 | 16 | 24 |
| 30 X 19 | 24 | 0.064/16 | 8 | 6 | 36 | 52 | 36 | 54 |
| 38 X 24 | 30 | 0.079/14 | 12 | 9 | 44 | 68 | 56 | 84 |
| 45 X 29 | 36 | 0.109/12 | 12 | 9 | 51 | 83 | 76 | 114 |
| 53 X 34 | 42 | 0.109/12 | 16 | 12 | 59 | 91 | 96 | 144 |

**STEEL SAFETY END SECTIONS FOR ARCHED PIPE**

| PIPE SIZE (INCHES) | | MIN METAL THICK INCH/GAUGE | DIMENSIONS (INCHES) | | | | | | |
|---|---|---|---|---|---|---|---|---|---|
| SPAN X RISE | EQUIV DIA | | A | H | W | OVERALL WIDTH | L | | |
| | | | | | | | SLOPE = 4 | SLOPE = 6 | SLOPE = 10* |
| 21 X 15 | 18 | 0.064/16 | 8 | 6 | 27 | 43 | 20 | 30 | 70 |
| 28 X 20 | 24 | 0.064/16 | 8 | 6 | 34 | 50 | 40 | 60 | 120 |
| 35 X 24 | 30 | 0.079/14 | 12 | 9 | 41 | 65 | 56 | 84 | 160 |
| 42 X 29 | 36 | 0.109/12 | 12 | 9 | 48 | 72 | 76 | 114 | 210 |
| 49 X 33 | 42 | 0.109/12 | 16 | 12 | 55 | 87 | 92 | 138 | |

* MINIMUM THICKNESS OF ALL 10:1 SLOPE END SECTIONS IS 0.109" / 12 GAUGE

**STEEL SAFETY END SECTIONS FOR CIRCULAR PIPE**

| PIPE DIA (INCHES) | MIN METAL THICK INCH/GAUGE | DIMENSIONS (INCHES) | | | | | | |
|---|---|---|---|---|---|---|---|---|
| | | A | H | W | OVERALL WIDTH | L | | |
| | | | | | | SLOPE = 4 | SLOPE = 6 | SLOPE = 10* |
| 18 | 0.064/16 | 8 | 6 | 24 | 40 | 32 | 48 | 100 |
| 24 | 0.064/16 | 8 | 6 | 30 | 46 | 56 | 84 | 160 |
| 30 | 0.109/12 | 12 | 9 | 36 | 60 | 80 | 120 | 220 |
| 36 | 0.109/12 | 12 | 9 | 42 | 66 | 104 | 156 | 280 |
| 42 | 0.109/12 | 16 | 12 | 48 | 80 | 128 | 192 | |

* MINIMUM THICKNESS OF ALL 10:1 SLOPE END SECTIONS IS 0.109" / 12 GAUGE

**NOTES:**

1. PROVIDE SLOTTED HOLES FOR SAFETY BAR ATTACHMENT.
2. NUMBER OF BARS REQUIRED VARIES DEPENDING ON THE LENGTH AND WIDTH OF THE END SECTION.
3. ADD LONGITUDINAL BAR WHEN WIDTH EXCEEDS 30 INCHES. WELD BARS TO CREATE ONE PIECE STRUCTURE.
4. USE GALVANIZED HARDWARE FOR CONNECTIONS.

SUPPLEMENTAL DRAWING

REVISIONS

| NO. | DATE | APPR. | REMARKS |
|---|---|---|---|
| 1 | 8/30/2018 | JGE | REMOVED DESIGN INFORMATION FROM THE DRAWING. |

**UTAH DEPARTMENT OF TRANSPORTATION**

STANDARD DRAWINGS FOR ROAD AND BRIDGE CONSTRUCTION

SALT LAKE CITY, UTAH

RECOMMENDED FOR APPROVAL — AUG.30.2018 DATE

CHAIRMAN STANDARDS COMMITTEE APPROVED — AUG.30.2018 DATE

DEPUTY DIRECTOR

STANDARD DRAWING TITLE: STEEL SAFETY END SECTIONS

STD. DWG. NO. DG 6

12-SEP-2018 DGN File: D:\StandardsandSpecsSection\2017Section\All Supp Issues\Issue # 6 08-30-2018\Drawings\DG06.dgn

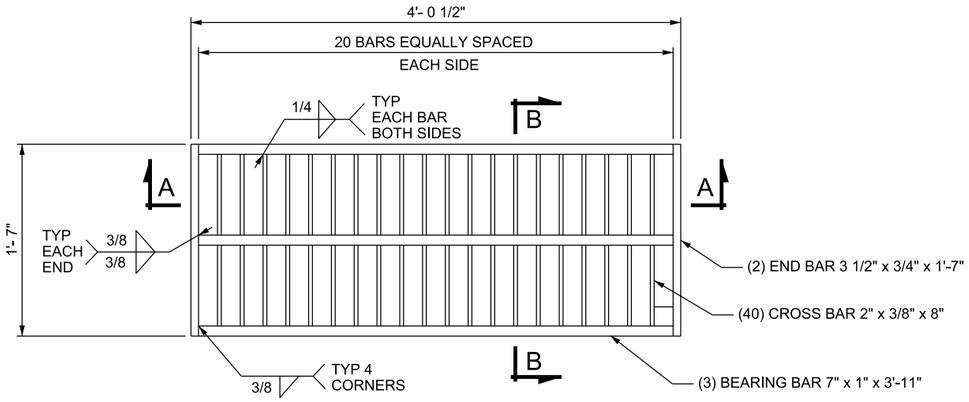


**PLAN**

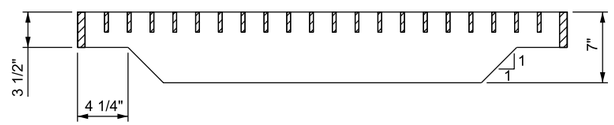


**SECTION A-A**

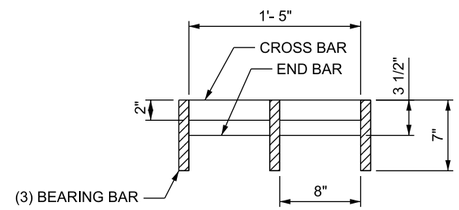


**SECTION B-B**

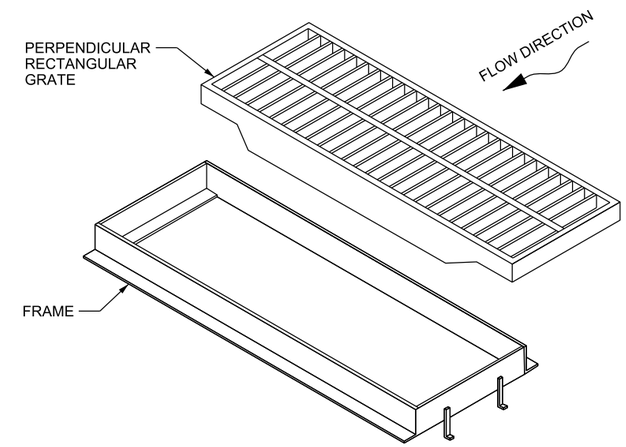


## PERPENDICULAR RECTANGULAR GRATE

WEIGHT: 341 LB
OPEN AREA: 4.39 $FT^2$

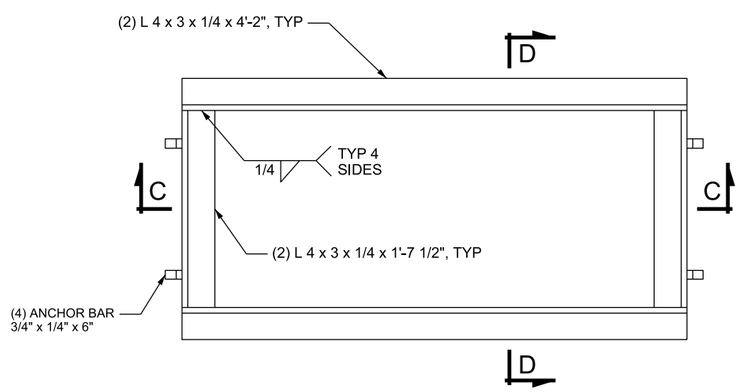


**PLAN**

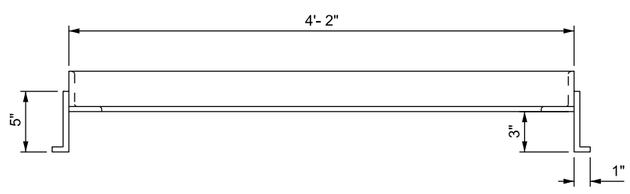


**SECTION C-C**

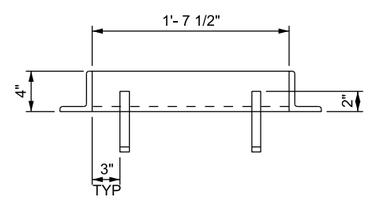


**SECTION D-D**

## FRAME

WEIGHT: 68 LB

DESIGN DATA

HL-93 IN ACCORDANCE WITH AASHTO LRFD BRIDGE DESIGN AND INTERIM SPECIFICATIONS

STRUCTURAL STEEL: Fy = 36,000 psi

NOTES

1. FURNISH RECTANGULAR GRATE AND FRAME IN STRUCTURAL STEEL.
2. WELD ALL JOINTS WITH A 1/4 INCH FILLET WELD UNLESS NOTED OTHERWISE.

SUPPLEMENTAL DRAWING

REVISIONS

| NO. | DATE | APPR. | REMARKS |
|---|---|---|---|
| 1 | 8/30/2018 | JGE | REMOVED DESIGN INFORMATION FROM THE DRAWING. |

**UTAH DEPARTMENT OF TRANSPORTATION**
STANDARD DRAWINGS FOR ROAD AND BRIDGE CONSTRUCTION
SALT LAKE CITY, UTAH

RECOMMENDED FOR APPROVAL — AUG.30, 2018 DATE
CHAIRMAN STANDARDS COMMITTEE APPROVED — AUG.30, 2018 DATE
DEPUTY DIRECTOR

PERPENDICULAR RECTANGULAR GRATE AND FRAME
STANDARD DRAWING TITLE

STD. DWG. NO.
GF 2

DGN File: Q:\StandardsandSpecsSection\2017Section\All Supp Issues\Issue # 6 08-30-2018\Drawings\GF02.dgn
12-SEP-2018

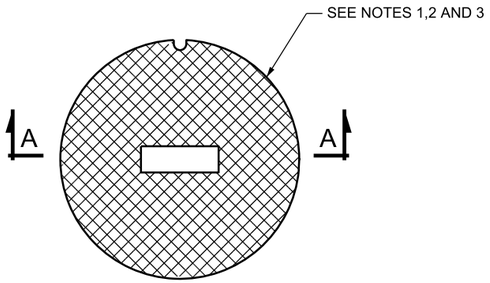


**SOLID**

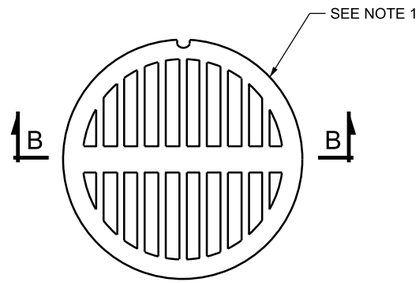


**GRATED**

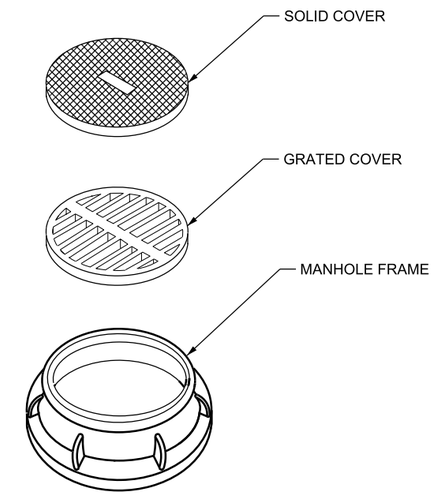


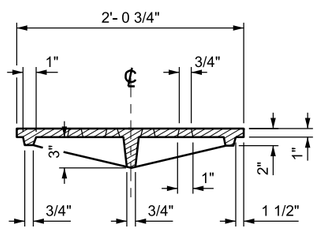


**SECTION A-A**

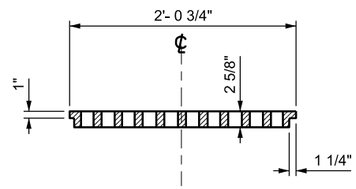


**SECTION B-B**

# MANHOLE COVER

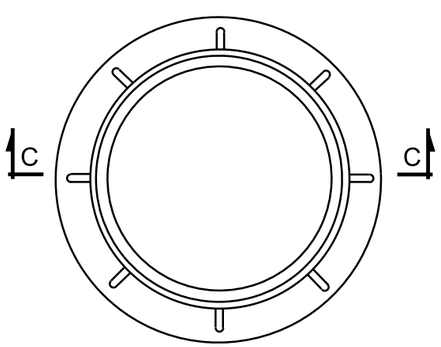


**FRAME PLAN**

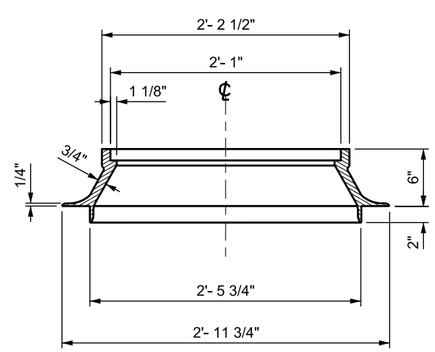


**SECTION C-C**

**NOTES**

1. FURNISH MANHOLE COVER AND FRAME IN EITHER GREY IRON OR DUCTILE IRON.
2. CAST A NON-SLIP AND NON-TRIP SURFACE INTO THE SOLID COVER.
3. CAST THE TYPE OF UTILITY INTO THE SOLID COVER ("STORM DRAIN", "SEWER", "WATER", FOR EXAMPLE)
4. DIMENSIONS OF THE GRATE OPENINGS MAY VARY DUE TO DIFFERENT MANUFACTURER'S CONFIGURATIONS.
5. ESTIMATED WEIGHT OF SOLID COVER AND FRAME 402 LB.
6. ESTIMATED WEIGHT OF GRATED COVER AND FRAME 385 LB.

SUPPLEMENTAL DRAWING

REVISIONS

| NO. | DATE | APPR. | REMARKS |
|---|---|---|---|
| 1 | 8/30/2018 | JGE | CORRECTED LEADER NOTE REFERENCES. |

**UTAH DEPARTMENT OF TRANSPORTATION**
STANDARD DRAWINGS FOR ROAD AND BRIDGE CONSTRUCTION
SALT LAKE CITY, UTAH

RECOMMENDED FOR APPROVAL — AUG.30, 2018 DATE
CHAIRMAN STANDARDS COMMITTEE APPROVED — AUG.30, 2018 DATE
DEPUTY DIRECTOR

MANHOLE COVER AND FRAME
STANDARD DRAWING TITLE

STD. DWG. NO.
GF 7

DGN File:Q:\StandardsandSpecsSection\2017Section\All Supp Issues\Issue * 6 08-30-2018\Drawings\GF07.dgn
12-SEP-2018

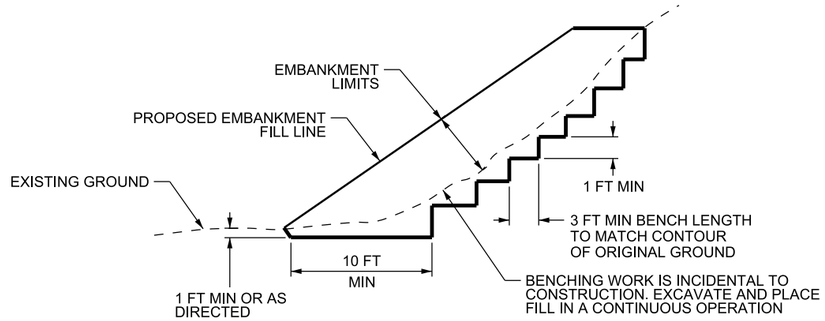


## BENCHED SLOPE DETAIL

(NOTE 3)

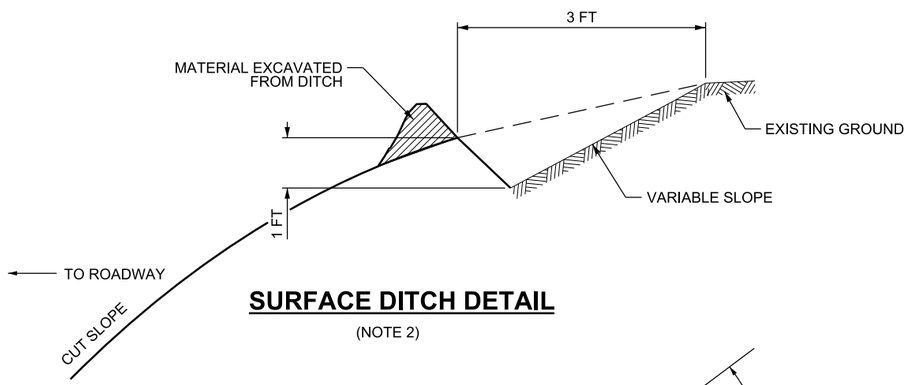


## SURFACE DITCH DETAIL

(NOTE 2)

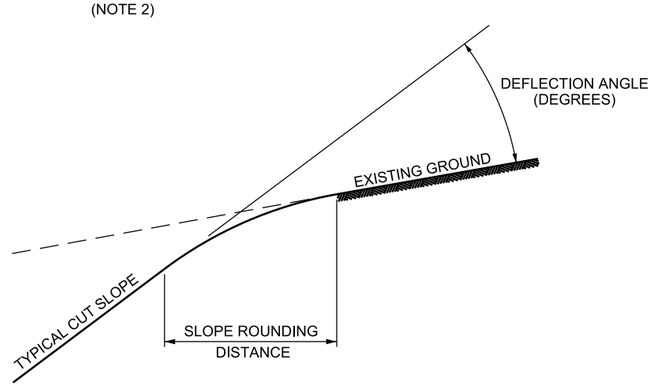


**TABLE 1 - COMMON DEFLECTION ANGLE (DEGREES)**

| | | | | EXISTING SLOPE | | | | | | | | | |
|---|---|---|---|---|---|---|---|---|---|---|---|---|---|
| | H:V | | | 1:1.5 | 1:1 | 2:1 | 3:1 | 4:1 | 5:1 | 6:1 | 8:1 | 10:1 | 20:1 |
| | | % SLOPE | | 150% | 100% | 50% | 33% | 25% | 20% | 17% | 13% | 10% | 5% |
| | | | DEG | 56 | 45 | 27 | 18 | 14 | 11 | 9 | 7 | 6 | 3 |
| PROPOSED SLOPE | 1:2 | 200% | 63 | 7 | 18 | 37 | 45 | 49 | 52 | 54 | 56 | 58 | 61 |
| | 1:1.5 | 150% | 56 | - | 11 | 30 | 38 | 42 | 45 | 47 | 49 | 51 | 53 |
| | 1:1 | 100% | 45 | - | - | 18 | 27 | 31 | 34 | 36 | 38 | 39 | 42 |
| | 2:1 | 50% | 27 | - | - | - | 8 | 13 | 15 | 17 | 19 | 21 | 24 |
| | 3:1 | 33% | 18 | - | - | - | - | 4 | 7 | 9 | 11 | 13 | 16 |
| | 4:1 | 25% | 14 | - | - | - | - | - | 3 | 5 | 7 | 8 | 11 |

**TABLE 2 - SLOPE ROUNDING DISTANCE (FT)**

| | | SLOPE HEIGHT (FT) (NOTE 5) | | | |
|---|---|---|---|---|---|
| | | 5-10 | >10-15 | >15-20 | >20 |
| DEFLECTION ANGLE | <10° | NO SLOPE ROUNDING NEEDED | | | |
| | 10°-20° | 2 | 4 | 5 | 6 |
| | 20°-30° | 4 | 8 | 10 | 12 |
| | 30°-40° | 6 | 12 | 15 | 18 |
| | 40°+ | 8 | 16 | 20 | 24 |

## CUT SLOPE ROUNDING DETAIL

(NOTE 4)

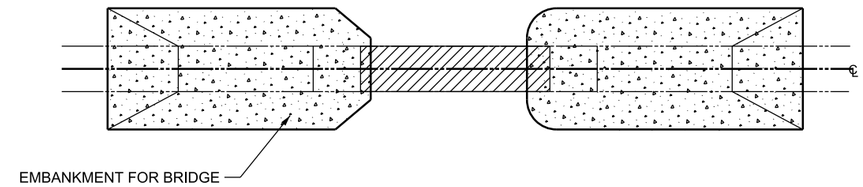


## PLAN VIEW APPROACH EMBANKMENTS

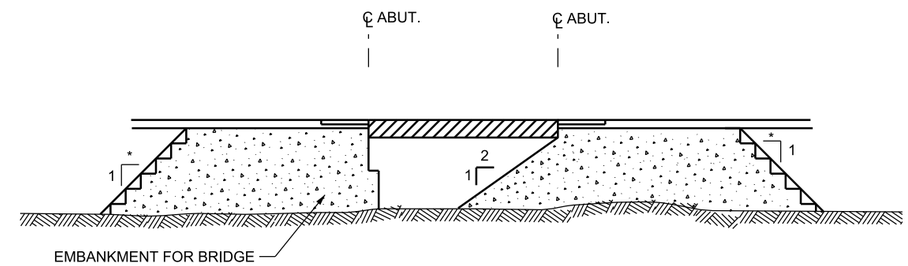


## CL PROFILE VIEW APPROACH EMBANKMENTS

* THEORETICAL SLOPE MAXIMUM OF 1:1 TO TRANSITION BETWEEN EMBANKMENT MATERIALS.

**NOTES:**

1. TRANSITION FROM FLAT TO STEEPER CUT AND FILL SLOPES IN SUFFICIENT DISTANCE TO PROVIDE A NATURAL PLEASING APPEARANCE.
2. INSTALL SURFACE DITCH (OPTIONAL) WHEN SHEET FLOW DRAINAGE IS CONCENTRATED TOWARDS AND HAS POTENTIAL TO ERODE THE CUT SLOPE OR CREATE OTHER HAZARDS. DRAIN SURFACE DITCH TO NATURAL DRAINAGE OR ROADSIDE DITCH. PROVIDE OTHER MEASURES TO PROTECT CUT SLOPES AND PREVENT OTHER HAZARDS IF SURFACE DITCH IS OMITTED.
3. BENCH EXISTING SLOPE PER CENTRAL GEOTECHNICAL RECOMMENDATIONS.
4. FIND THE COMMON DEFLECTION ANGLE IN TABLE 1 AND THEN USE TABLE 2 TO FIND THE SLOPE ROUNDING DISTANCE FOR CUT SLOPE ROUNDING DETAIL. THE GREATER NUMBER OF MULTIPLE DISTANCES MAY BE USED TO AVOID FREQUENT ROUNDING DISTANCE CHANGES.
5. THE CUT SLOPE HEIGHT IS FROM THE BOTTOM TO THE TOP OF THE CUT BEFORE ROUNDING.
6. DO NOT EXCEED 2H:1V OR STEEPER SLOPES WITHOUT APPROVAL FROM THE ENGINEER.

SUPPLEMENTAL DRAWING

REVISIONS

| NO. | DATE | APPR. | REMARKS |
|---|---|---|---|
| | | | |

**UTAH DEPARTMENT OF TRANSPORTATION**
STANDARD DRAWINGS FOR ROAD AND BRIDGE CONSTRUCTION
SALT LAKE CITY, UTAH

RECOMMENDED FOR APPROVAL — AUG 30, 2018 DATE
CHAIRMAN STANDARDS COMMITTEE APPROVED — AUG 30, 2018 DATE
DEPUTY DIRECTOR

SURFACE DITCH, BENCHED SLOPE AND EMBANKMENT FOR BRIDGE PLACEMENT DETAILS
STANDARD DRAWING TITLE

STD. DWG. NO.
GW 8

DGN File: D:\StandardsandSpecsSection\2017Section\All Supp Issues\Issue # 6 08-30-2018\Drawings\GW08.dgn
12-SEP-2018

| TABLE 1 | | | | | | | | | | | | | | | | |
|---|---|---|---|---|---|---|---|---|---|---|---|---|---|---|---|---|
| RECOMMENDATIONS FOR INSTALLING MARKED CROSSWALKS AND ENHANCEMENTS | | | | | | | | | | | | | | | | |
| ROADWAY TYPE (NUMBER OF LANES AND MEDIAN TYPE) | ADT < 9,000 | | | | ADT 9,000 TO 12,000 | | | | ADT 12,000 TO 15,000 | | | | ADT > 15,000 | | | |
| | 30 MPH | 35 MPH | 40 MPH | 45 MPH | 30 MPH | 35 MPH | 40 MPH | 45 MPH | 30 MPH | 35 MPH | 40 MPH | 45 MPH | 30 MPH | 35 MPH | 40 MPH | 45 MPH |
| TWO LANES | C | C | P | P | C | C | P | P | C | C | N | N | C | P | N | N |
| THREE LANES | C | C | P | P | C | P | P | P | P | P | N | N | P | N | N | N |
| FOUR OR MORE LANES WITH RAISED MEDIAN | C | C | P | P | C | P | N | N | P | P | N | N | N | N | N | N |
| FOUR OR MORE LANES WITHOUT RAISED MEDIAN | C | P | N | N | P | P | N | N | N | N | N | N | N | N | N | N |

C = CANDIDATE SITE FOR MARKED CROSSWALKS
P = POTENTIAL FOR ADDING PEDESTRIAN ENHANCEMENTS
N = NEEDS PEDESTRIAN ENHANCEMENTS
USE DESIGN SPEED

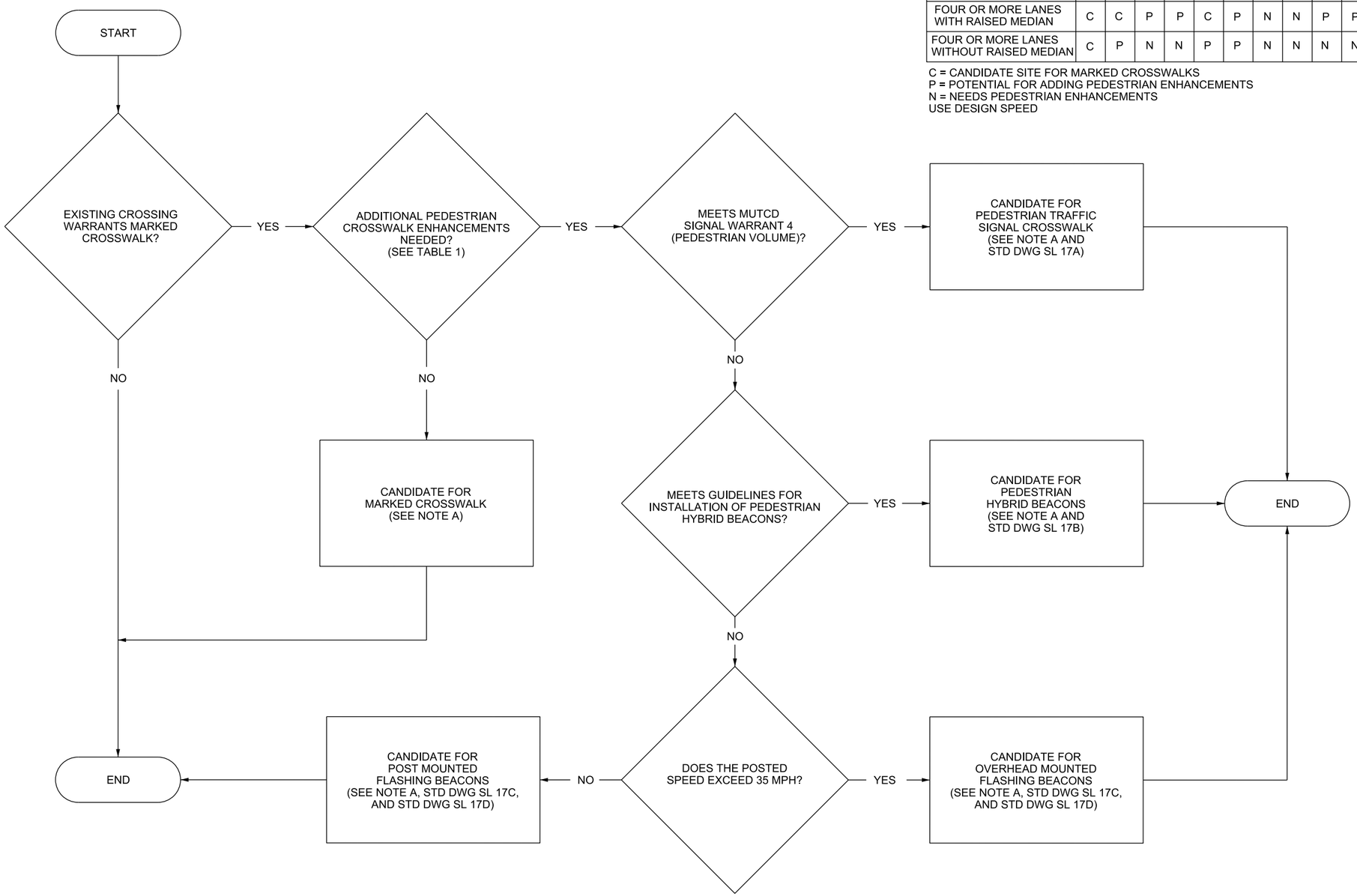


## PROCESS FOR WARRANTING PEDESTRIAN ENHANCEMENTS

**DESIGN NOTES:**

A. SCHEDULE WARRANTING FIELD REVIEW WITH REGION TRAFFIC OPERATIONS ENGINEER AND TRAFFIC & SAFETY ENGINEER.

DESIGN ONLY DRAWING | SUPPLEMENTAL DRAWING

REVISIONS

| NO. | DATE | APPR. | REMARKS |
|---|---|---|---|

**UTAH DEPARTMENT OF TRANSPORTATION**
STANDARD DRAWINGS FOR ROAD AND BRIDGE CONSTRUCTION
SALT LAKE CITY, UTAH

RECOMMENDED FOR APPROVAL — AUG 30, 2018 DATE
CHAIRMAN STANDARDS COMMITTEE APPROVED — AUG 30, 2018 DATE
DEPUTY DIRECTOR

MARKED PEDESTRIAN CROSSWALK ENHANCEMENT FLOWCHART
STANDARD DRAWING TITLE

STD. DWG. NO.
PA 7

DGN File:Q:\StandardsandSpecsSection\2017Section\All Supp Issues\Issue # 6 08-30-2018\Drawings\PA07.dgn
12-SEP-2018

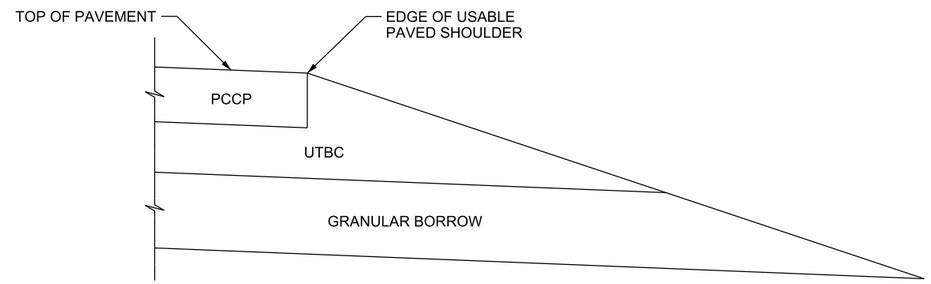


## PCCP EDGE DETAIL

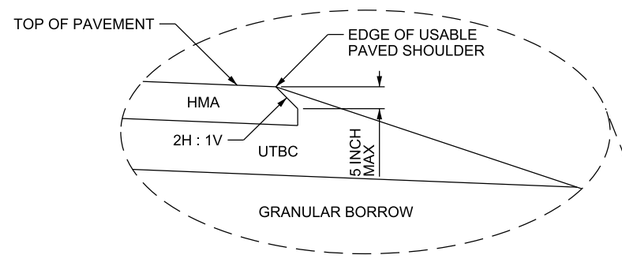


## HMA EDGE OPTION 1

(NOTE 2)

## HMA PAVEMENT EDGE DETAIL

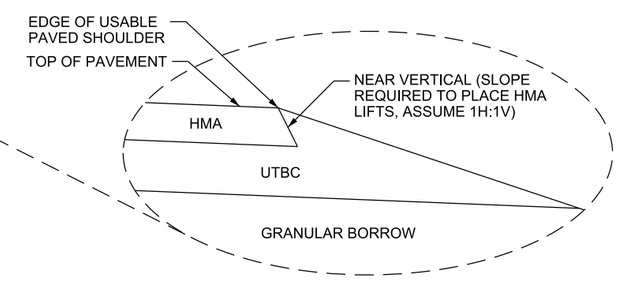


## HMA EDGE OPTION 3

(NOTE 2)

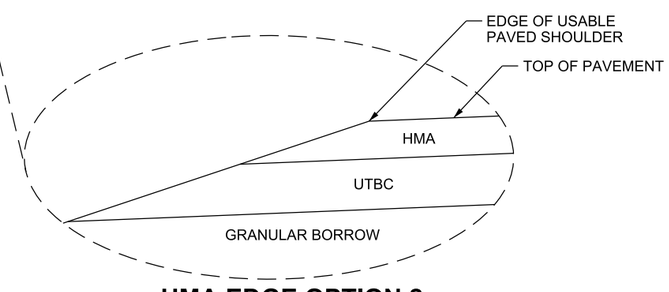


## HMA EDGE OPTION 2

(NOTE 2)

**NOTES:**

1. PROVIDE MEASURES TO CAPTURE AND CONVEY DRAINAGE AWAY FROM PAVEMENT SECTION. MAINTAIN A MINIMUM 1 FT VERTICAL DISTANCE BELOW THE BOTTOM OF GRANULAR BORROW LAYER TO THE BOTTOM OF THE CUT DITCH OR FILL LINE OR PER PLAN.
2. REFER TO PROJECT PLAN SHEETS TO IDENTIFY WHICH EDGE DETAIL TO USE.

SUPPLEMENTAL DRAWING

REVISIONS

| NO. | DATE | APPR. | REMARKS |
|---|---|---|---|
| | | | |

**UTAH DEPARTMENT OF TRANSPORTATION**
STANDARD DRAWINGS FOR ROAD AND BRIDGE CONSTRUCTION
SALT LAKE CITY, UTAH

RECOMMENDED FOR APPROVAL — AUG 30, 2018 DATE
CHAIRMAN STANDARDS COMMITTEE APPROVED — AUG 30, 2018 DATE
DEPUTY DIRECTOR

STANDARD DRAWING TITLE
EDGE DETAIL

STD. DWG. NO.
PV 11

DGN File:Q:\StandardsandSpecsSection\2017Section\All Supp Issues\Issue # 6 08-30-2018\Drawings\PV11.dgn
12-SEP-2018

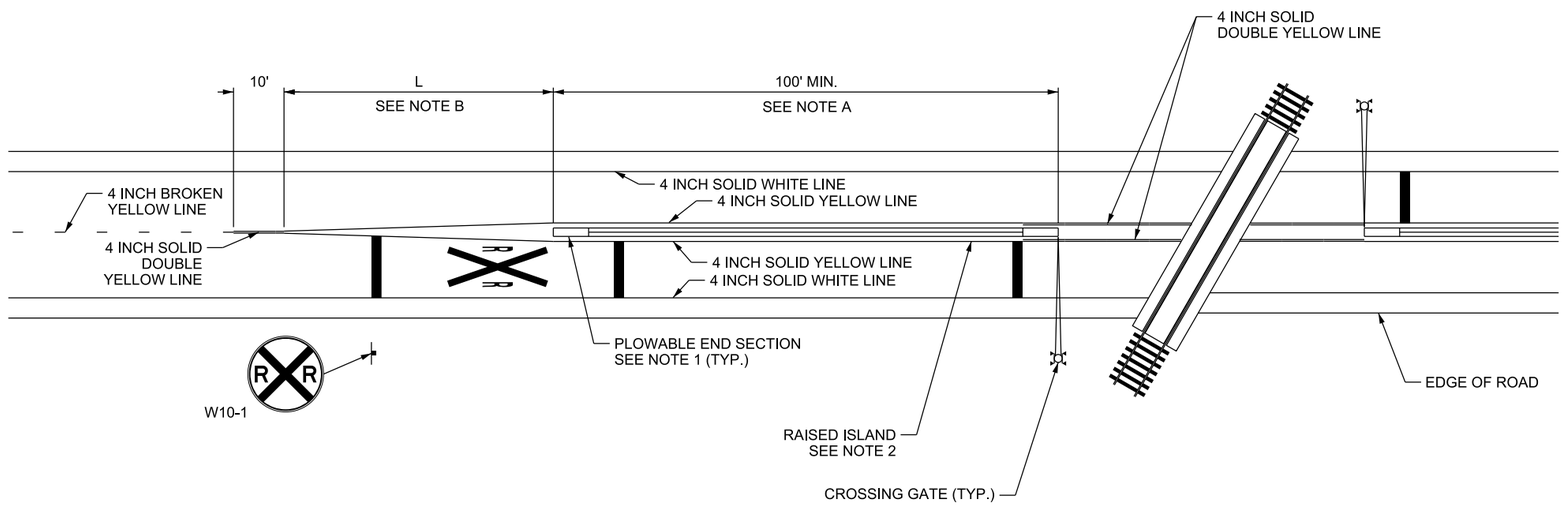


**DESIGN-ONLY NOTES:**

A. RAISED ISLAND LENGTH MAY BE REDUCED TO 60 FT MINIMUM IF NEARBY INTERSECTIONS PREVENT INSTALLATION OF A FULL LENGTH BARRIER UPON APPROVAL FROM THE ENGINEER.

B. SEE TABLE 1 ON UDOT ROADWAY DESIGN MANUAL DM 4.1 FOR TAPER LENGTH "L."

**NOTES:**

1. PLACE PLOWABLE END SECTIONS AT BOTH ENDS OF RAISED ISLAND. SEE STD DWG GW 01B FOR PLOWABLE END SECTION DETAILS.
2. USE TYPE B5 CURB. SEE STD DWG GW 01A FOR RAISED ISLAND DETAILS.
3. SEE STD DWG RR 2 FOR PAVEMENT MARKING INFORMATION.
4. TYPICAL PLACEMENT FOR BOTH SIDES OF RAILROAD CROSSING.
5. DELINEATE EACH END OF RAISED ISLAND.

SUPPLEMENTAL DRAWING

REVISIONS

| NO. | DATE | APPR. | REMARKS |
|---|---|---|---|
| | | | |

**UTAH DEPARTMENT OF TRANSPORTATION**
STANDARD DRAWINGS FOR ROAD AND BRIDGE CONSTRUCTION
SALT LAKE CITY, UTAH

RECOMMENDED FOR APPROVAL — AUG 30, 2018 DATE
CHAIRMAN STANDARDS COMMITTEE APPROVED — AUG 30, 2018 DATE
DEPUTY DIRECTOR

RAISED ISLAND PLACEMENT AT RAILROAD CROSSINGS
STANDARD DRAWING TITLE

STD. DWG. NO.
RR 8

12-SEP-2018 DGN File: D:\StandardsandSpecsSection\2017Section\All Supp Issues\Issue # 6 08-30-2018\Drawings\RR08.dgn

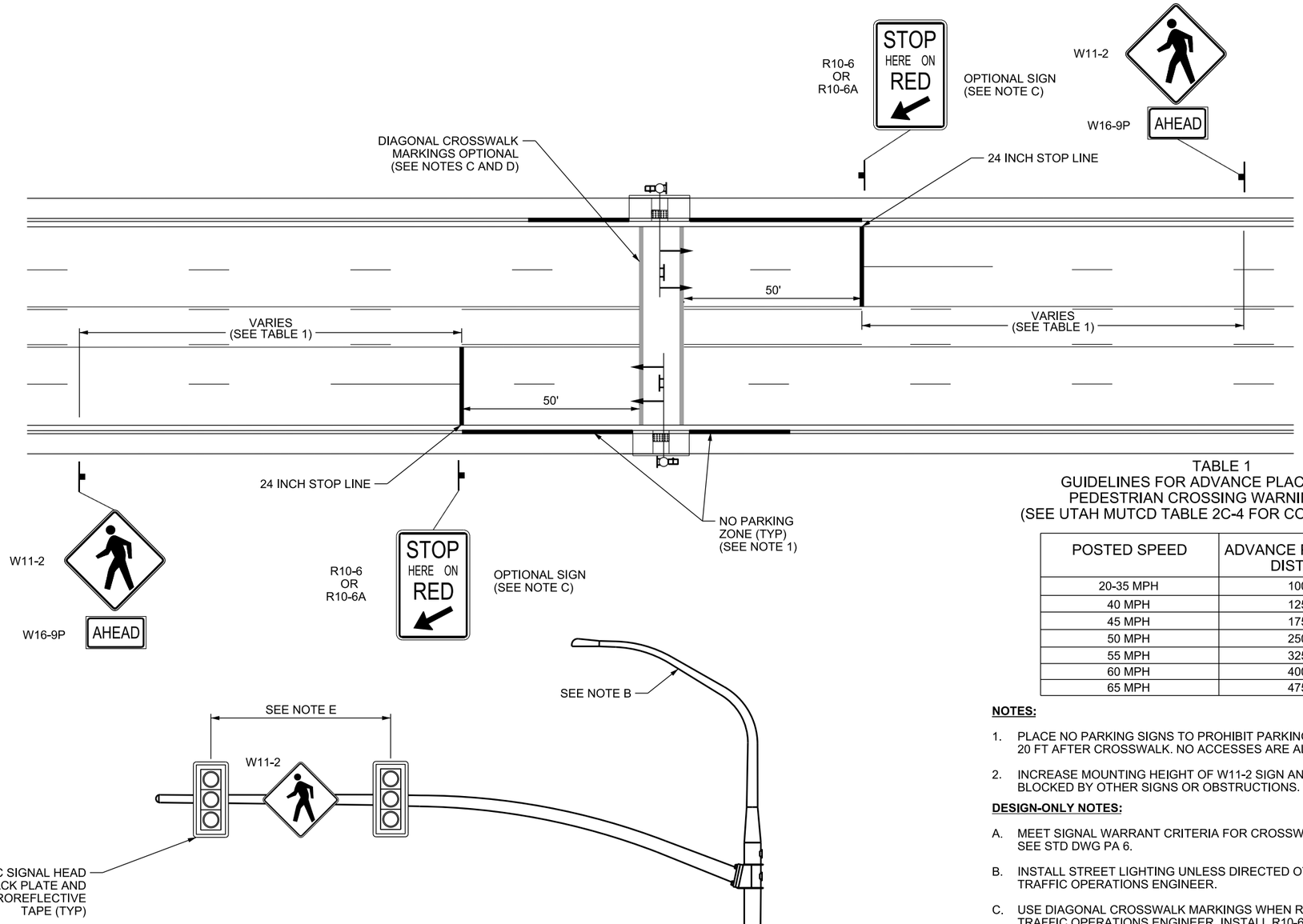


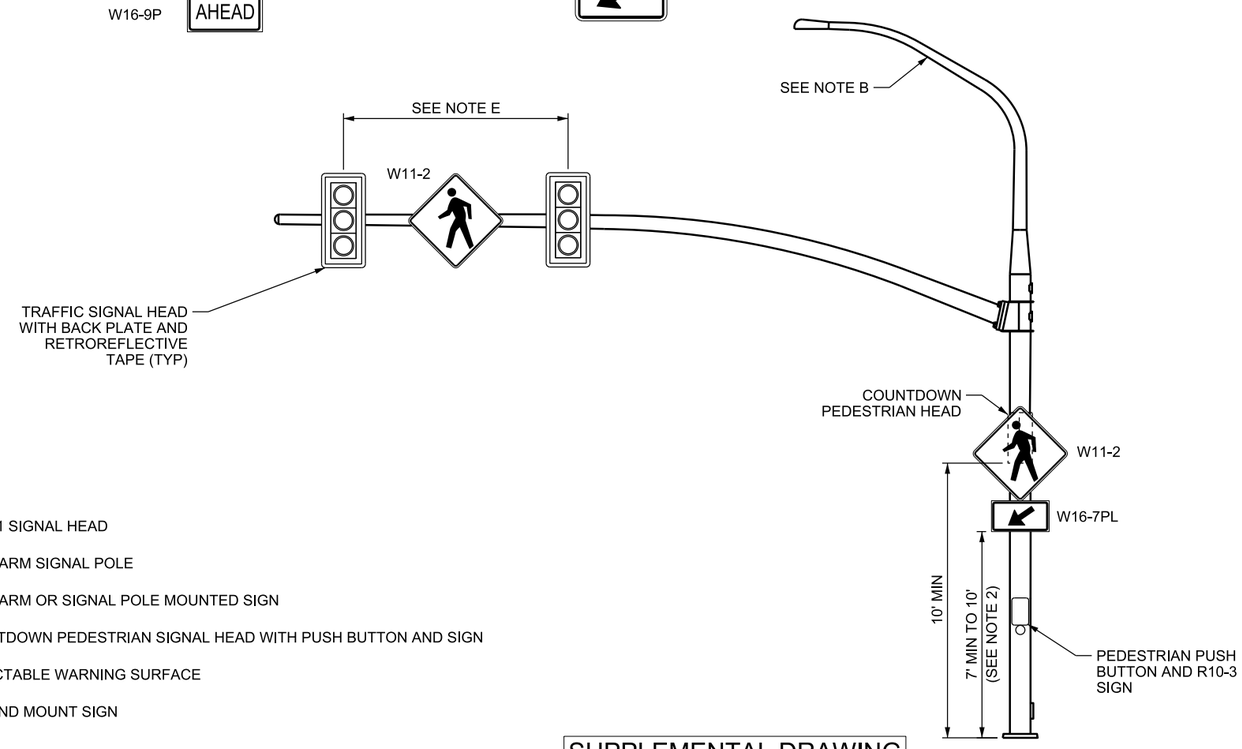


**LEGEND**

- TYPE 1 SIGNAL HEAD
- MAST ARM SIGNAL POLE
- MAST ARM OR SIGNAL POLE MOUNTED SIGN
- COUNTDOWN PEDESTRIAN SIGNAL HEAD WITH PUSH BUTTON AND SIGN
- DETECTABLE WARNING SURFACE
- GROUND MOUNT SIGN

SUPPLEMENTAL DRAWING

TABLE 1
GUIDELINES FOR ADVANCE PLACEMENT OF
PEDESTRIAN CROSSING WARNING SIGNS
(SEE UTAH MUTCD TABLE 2C-4 FOR COMPLETE TABLE)

| POSTED SPEED | ADVANCE PLACEMENT DISTANCE |
|---|---|
| 20-35 MPH | 100 FT |
| 40 MPH | 125 FT |
| 45 MPH | 175 FT |
| 50 MPH | 250 FT |
| 55 MPH | 325 FT |
| 60 MPH | 400 FT |
| 65 MPH | 475 FT |

**NOTES:**

1. PLACE NO PARKING SIGNS TO PROHIBIT PARKING 50 FT BEFORE AND 20 FT AFTER CROSSWALK. NO ACCESSES ARE ALLOWED IN THIS AREA.
2. INCREASE MOUNTING HEIGHT OF W11-2 SIGN AND W16-7PL PLAQUE IF BLOCKED BY OTHER SIGNS OR OBSTRUCTIONS.

**DESIGN-ONLY NOTES:**

A. MEET SIGNAL WARRANT CRITERIA FOR CROSSWALK INSTALLATION. SEE STD DWG PA 6.

B. INSTALL STREET LIGHTING UNLESS DIRECTED OTHERWISE BY REGION TRAFFIC OPERATIONS ENGINEER.

C. USE DIAGONAL CROSSWALK MARKINGS WHEN REQUIRED BY REGION TRAFFIC OPERATIONS ENGINEER. INSTALL R10-6 OR R10-6A SIGNS WHEN REQUIRED BY REGION TRAFFIC OPERATIONS ENGINEER.

D. PROVIDE REQUIRED SCHOOL CROSSING SIGNING AND PAVEMENT MARKINGS AT SCHOOL CROSSWALKS.

E. PROVIDE A SIGNAL HEAD CENTERED OVER EACH THRU LANE FOR MULTIPLE THRU LANE APPROACHES. PROVIDE W11-2 SIGN CENTERED BETWEEN ALL SIGNAL HEADS.

CENTER W11-2 SIGN IN THE THRU LANE AND PROVIDE TWO SIGNAL HEADS SPACED AT LEAST 8 FT APART FOR SINGLE THRU LANE APPROACHES.

F. REMOVE TWO WAY LEFT TURN LANE AND INSTALL A RAISED MEDIAN OR DOUBLE YELLOW LINES WHEN REQUIRED BY REGION TRAFFIC OPERATIONS ENGINEER.

G. INTERCONNECT SIGNAL TO UDOT COMMUNICATIONS NETWORK. COORDINATE NEW PEDESTRIAN SIGNAL WITH ADJACENT TRAFFIC SIGNALS ON BOTH SIDES. OBTAIN WRITTEN APPROVAL FROM ATMS PROJECT MANAGER TO WAIVE THESE REQUIREMENTS.

H. MEET MINIMUM TRAFFIC SIGNAL SPACING REQUIREMENTS.

I. FOLLOW SIGNALIZED INTERSECTION DESIGN GUIDELINES.

REVISIONS

| NO. | DATE | APPR. | REMARKS |
|---|---|---|---|
| | | | |

**UTAH DEPARTMENT OF TRANSPORTATION**
STANDARD DRAWINGS FOR ROAD AND BRIDGE CONSTRUCTION
SALT LAKE CITY, UTAH

RECOMMENDED FOR APPROVAL — AUG 30, 2018 DATE
CHAIRMAN STANDARDS COMMITTEE APPROVED — AUG 30, 2018 DATE
DEPUTY DIRECTOR

PEDESTRIAN SIGNAL CROSSWALK
STANDARD DRAWING TITLE

STD. DWG. NO.
SL 6B

DGN File: Q:\StandardsandSpecsSection\2017Section\All Supp Issues\Issue # 6 08-30-2018\Drawings\SL06B.dgn
12-SEP-2018

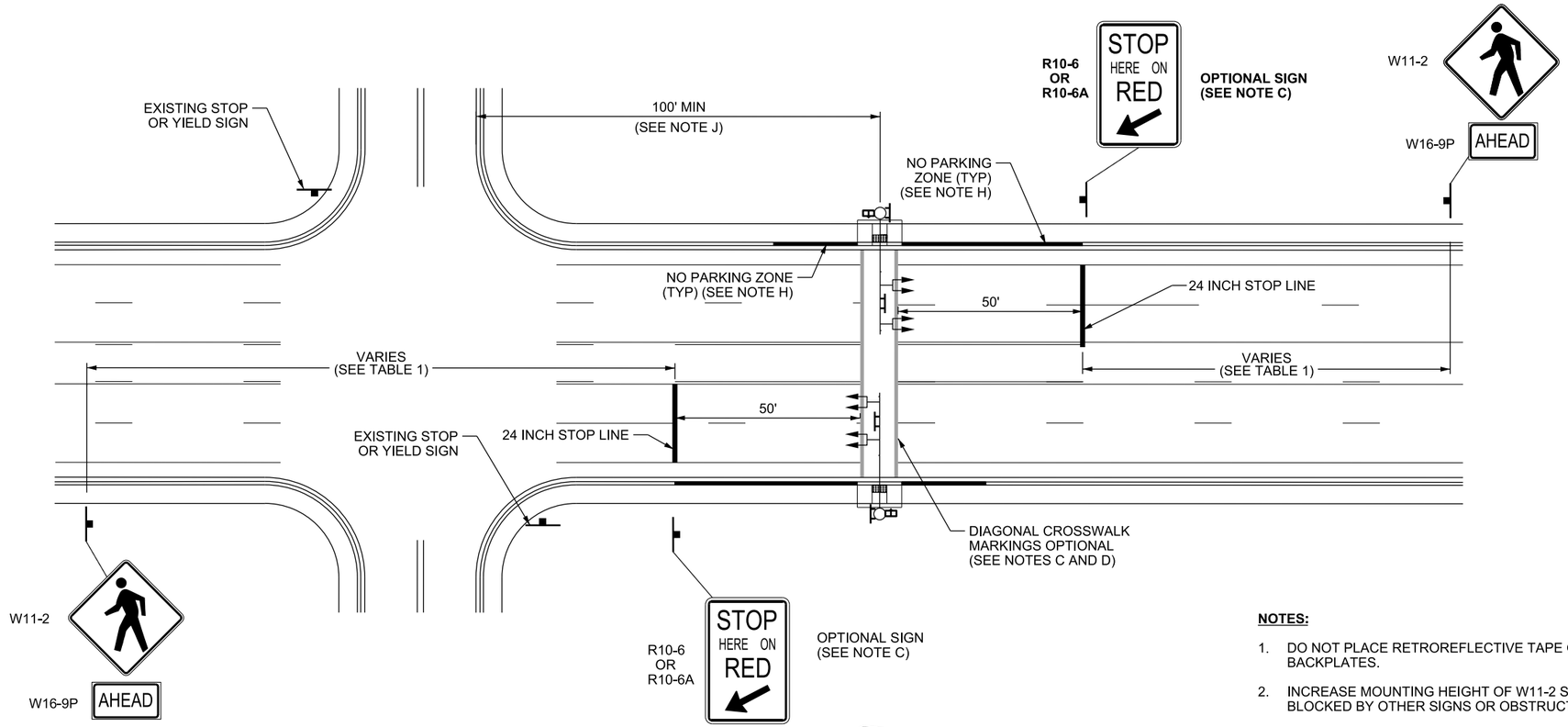


TABLE 1
GUIDELINES FOR ADVANCE PLACEMENT OF
PEDESTRIAN CROSSING WARNING SIGNS
(SEE UTAH MUTCD TABLE 2C-4 FOR COMPLETE TABLE)

| POSTED SPEED | MINIMUM ADVANCE PLACEMENT DISTANCE |
|---|---|
| 20-35 MPH | 100 FT |
| 40 MPH | 125 FT |
| 45 MPH | 175 FT |
| 50 MPH | 250 FT |
| 55 MPH | 325 FT |
| 60 MPH | 400 FT |
| 65 MPH | 475 FT |

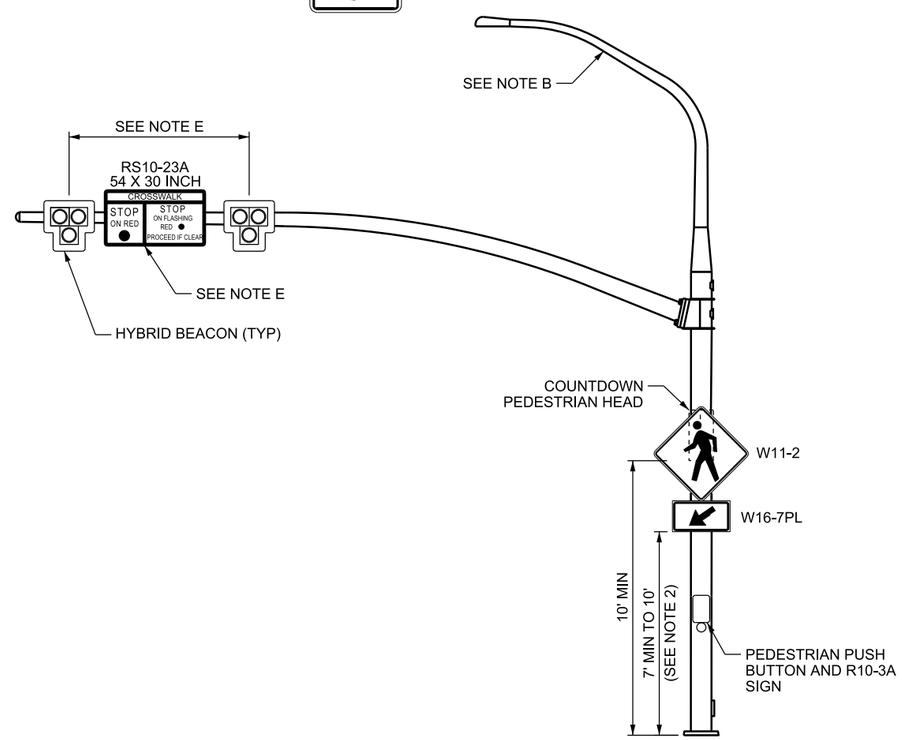


**LEGEND**

- 12" DIAMETER HYBRID BEACON
- MAST ARM SIGNAL POLE
- MAST ARM OR SIGNAL POLE MOUNTED SIGN
- COUNTDOWN PEDESTRIAN SIGNAL HEAD WITH PUSH BUTTON AND SIGN
- DETECTABLE WARNING SURFACE
- GROUND MOUNT SIGN

**NOTES:**

1. DO NOT PLACE RETROREFLECTIVE TAPE ON HYBRID BEACON BACKPLATES.
2. INCREASE MOUNTING HEIGHT OF W11-2 SIGN AND W16-7PL PLAQUE IF BLOCKED BY OTHER SIGNS OR OBSTRUCTIONS.

**DESIGN-ONLY NOTES:**

A. MEET PEDESTRIAN HYBRID BEACON SIGNAL GUIDELINES. SEE STD DWG PA 6.

B. INSTALL STREET LIGHTING UNLESS DIRECTED OTHERWISE BY REGION TRAFFIC OPERATIONS ENGINEER.

C. USE DIAGONAL CROSSWALK MARKINGS WHEN REQUIRED BY REGION TRAFFIC OPERATIONS ENGINEER. INSTALL R10-6 OR R10-6A SIGNS WHEN REQUIRED BY REGION TRAFFIC OPERATIONS ENGINEER.

D. PROVIDE REQUIRED SCHOOL CROSSING SIGNING AND PAVEMENT MARKINGS AT SCHOOL CROSSWALKS.

E. CENTER HYBRID BEACON IN EACH THRU LANE. PROVIDE RS10-23A SIGN CENTERED BETWEEN ALL HYBRID BEACONS. FOR SINGLE THRU LANE APPROACHES, CENTER RS10-23A SIGN IN THE LANE AND SPACE HYBRID BEACONS AT LEAST 10 FT APART.

F. REMOVE TWO WAY LEFT TURN LANE AND INSTALL A RAISED MEDIAN OR DOUBLE YELLOW LINES WHEN REQUIRED BY REGION TRAFFIC OPERATIONS ENGINEER.

G. INTERCONNECT SIGNAL TO UDOT COMMUNICATIONS NETWORK. COORDINATE NEW PEDESTRIAN HYBRID BEACON WITH ADJACENT TRAFFIC SIGNALS ON BOTH SIDES. OBTAIN WRITTEN APPROVAL FROM ATMS PROJECT MANAGER TO WAIVE THESE REQUIREMENTS.

H. PLACE NO PARKING SIGNS TO PROHIBIT PARKING 50 FT BEFORE AND 20 FT AFTER CROSSWALK. NO ACCESSES ARE ALLOWED IN THIS AREA.

I. MEET MINIMUM TRAFFIC SIGNAL SPACING REQUIREMENTS.

J. INSTALL THE PEDESTRIAN HYBRID BEACON AT LEAST 100 FT FROM SIDE STREETS AND DRIVEWAYS THAT ARE CONTROLLED BY STOP OR YIELD SIGNS. DO NOT INSTALL IN LEFT TURN LANE, STORAGE, GAP, OR DECELERATION AREAS. DO NOT INSTALL IN POTENTIAL FUTURE LEFT TURN LANE IF CURRENTLY MARKED AS A TWO WAY LEFT TURN LANE.

K. PLACE HYBRID BEACON ASSEMBLIES ON A SINGLE OR TWO SEPARATE MAST ARMS.

SUPPLEMENTAL DRAWING

REVISIONS

| NO. | DATE | APPR. | REMARKS |
|---|---|---|---|
| | | | |

**UTAH DEPARTMENT OF TRANSPORTATION**
STANDARD DRAWINGS FOR ROAD AND BRIDGE CONSTRUCTION
SALT LAKE CITY, UTAH

RECOMMENDED FOR APPROVAL — AUG 30, 2018 DATE
CHAIRMAN STANDARDS COMMITTEE APPROVED — AUG 30, 2018 DATE
DEPUTY DIRECTOR

PEDESTRIAN HYBRID BEACON CROSSWALK (HAWK)

STANDARD DRAWING TITLE

STD. DWG. NO.
SL 6C

12-SEP-2018 DGN File: D:\StandardsandSpecsSection\2017Section\All Supp Issues\Issue # 6 08-30-2018\Drawings\SL06C.dgn

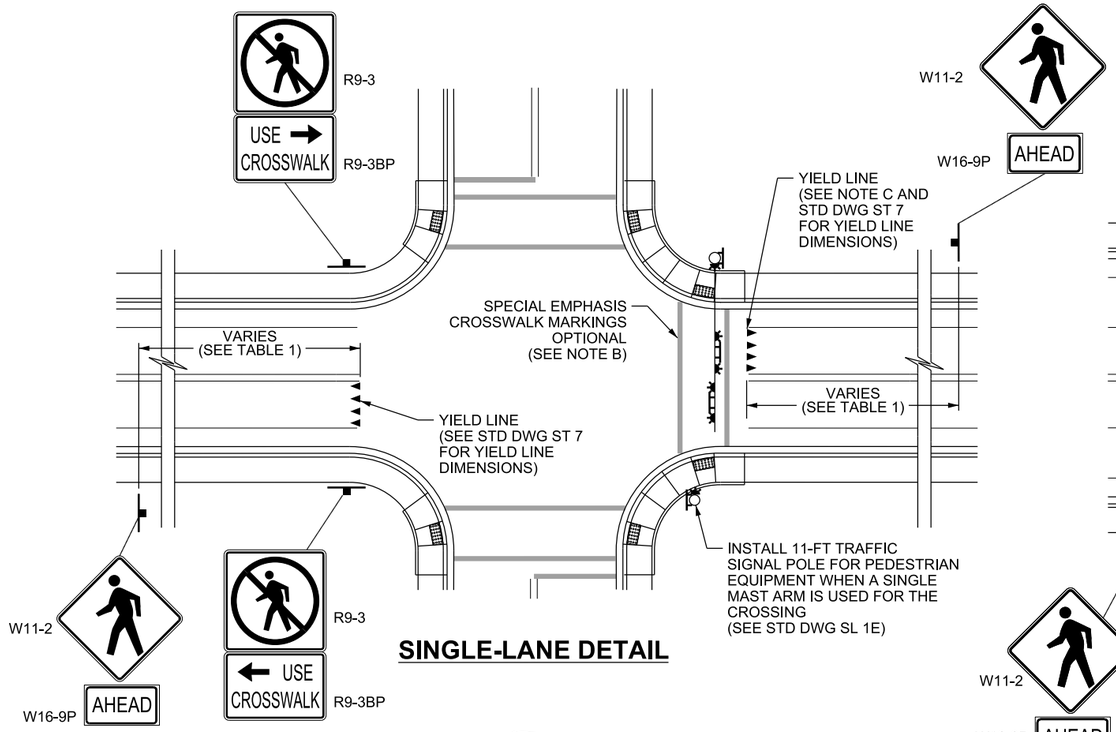


## SINGLE-LANE DETAIL

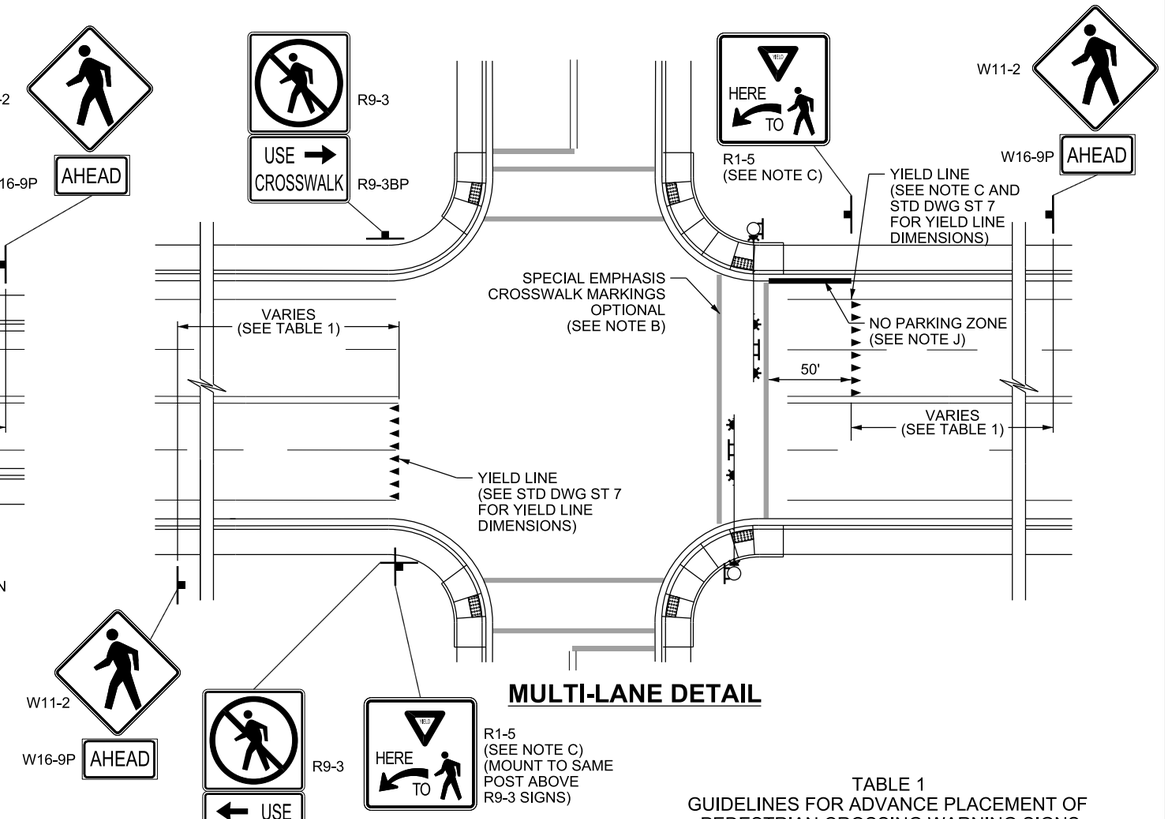


## MULTI-LANE DETAIL

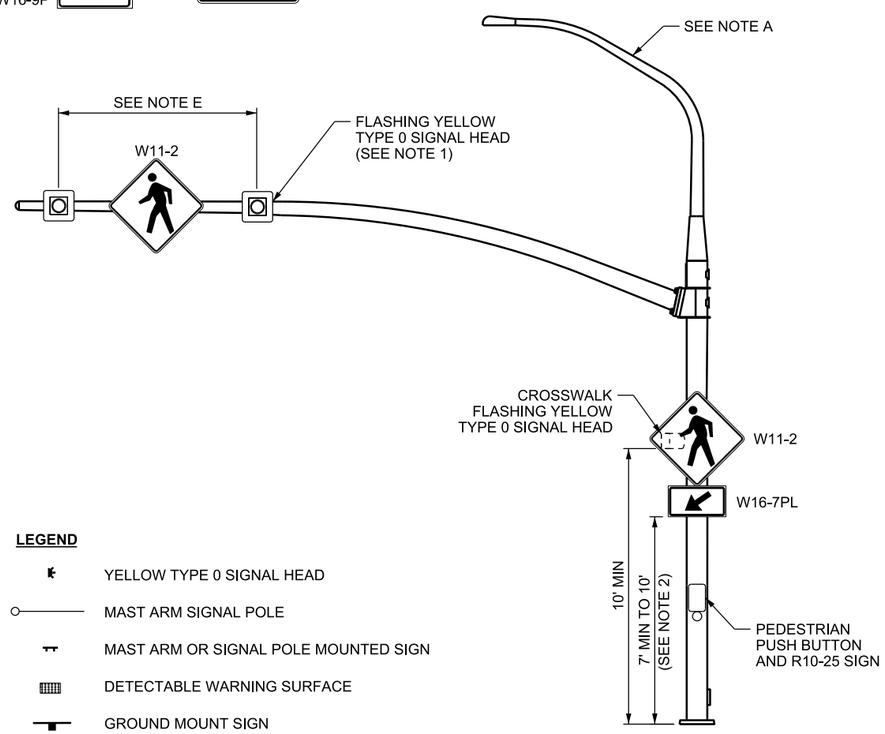


## OVERHEAD DETAIL

**LEGEND**

- YELLOW TYPE 0 SIGNAL HEAD
- MAST ARM SIGNAL POLE
- MAST ARM OR SIGNAL POLE MOUNTED SIGN
- DETECTABLE WARNING SURFACE
- GROUND MOUNT SIGN

TABLE 1
GUIDELINES FOR ADVANCE PLACEMENT OF PEDESTRIAN CROSSING WARNING SIGNS
(SEE UTAH MUTCD TABLE 2C-4 FOR COMPLETE TABLE)

| POSTED SPEED | ADVANCE PLACEMENT DISTANCE |
|---|---|
| 20-35 MPH | 100 FT |
| 40 MPH | 125 FT |
| 45 MPH | 175 FT |

**NOTES:**

1. DO NOT PLACE RETROREFLECTIVE TAPE ON TYPE 0 SIGNAL HEAD BACKPLATES.
2. INCREASE MOUNTING HEIGHT OF W11-2 SIGN AND W16-7PL PLAQUE IF BLOCKED BY OTHER SIGNS OR OBSTRUCTIONS.

**DESIGN-ONLY NOTES:**

A. INSTALL STREET LIGHTING UNLESS DIRECTED OTHERWISE BY REGION TRAFFIC OPERATIONS ENGINEER.

B. USE SPECIAL EMPHASIS CROSSWALK MARKINGS WHEN REQUIRED BY REGION TRAFFIC OPERATIONS ENGINEER. SEE STD DWG ST 7.

C. PLACE YIELD LINE 4 FT FROM CROSSWALK AT INTERSECTIONS ON SINGLE-LANE APPROACHES OR 50 FT FOR MULTI-LANE APPROACHES. USE "YIELD HERE TO PEDESTRIANS" R1-5 SIGN FOR MULTI-LANE APPROACHES.

D. REFER TO UTAH MUTCD PART 7 FOR REQUIREMENTS AT SCHOOL CROSSINGS.

E. PROVIDE A TYPE 0 SIGNAL HEAD CENTERED OVER EACH THRU LANE, FOR MULTIPLE THRU LANE APPROACHES. PROVIDE W11-2 SIGN CENTERED BETWEEN ALL TYPE 0 SIGNAL HEADS.

CENTER W11-2 SIGN IN THE THRU LANE AND PROVIDE TWO TYPE 0 SIGNAL HEADS SPACED AT LEAST 8 FT APART, FOR SINGLE THRU LANE APPROACHES.

F. DO NOT INSTALL FLASHING BEACON CROSSWALK ON ROADWAYS WITH SPEEDS GREATER THAN 45 MPH UNLESS DIRECTED BY REGION TRAFFIC OPERATIONS ENGINEER. SEE STD DWG PA 6.

G. PLACE FLASHING BEACON ASSEMBLIES ON A SINGLE OR TWO SEPARATE MAST ARMS.

H. DO NOT INSTALL FLASHING BEACON CROSSWALK IN A REDUCED SPEED SCHOOL ZONE.

I. A MULTI-LANE APPROACH HAS TWO OR MORE LANES MOVING TOWARD THE INTERSECTION, INCLUDING TURNING LANES.

J. PLACE "NO PARKING" SIGNS TO PROHIBIT PARKING 50 FT BEFORE CROSSWALK. NO ACCESSES ARE ALLOWED IN THIS AREA.

SUPPLEMENTAL DRAWING

REVISIONS

| NO. | DATE | APPR. | REMARKS |
|---|---|---|---|

**UTAH DEPARTMENT OF TRANSPORTATION**
STANDARD DRAWINGS FOR ROAD AND BRIDGE CONSTRUCTION
SALT LAKE CITY, UTAH

RECOMMENDED FOR APPROVAL — AUG 30, 2018 DATE
CHAIRMAN STANDARDS COMMITTEE APPROVED — AUG 30, 2018 DATE
DEPUTY DIRECTOR

OVERHEAD FLASHING BEACON AT AN INTERSECTION CROSSWALK
STANDARD DRAWING TITLE

STD. DWG. NO.
SL 6D

DGN File:Q:\Standards&SpecsSection\2017Section\All Supp Issues\Issue # 6 08-30-2018\Drawings\SL06D.dgn
12-SEP-2018

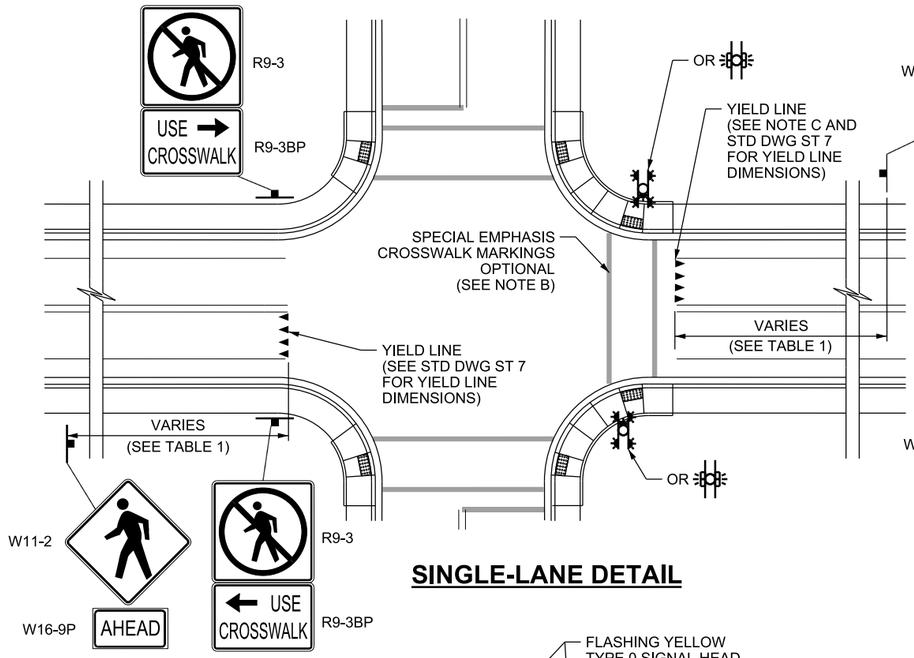


## SINGLE-LANE DETAIL

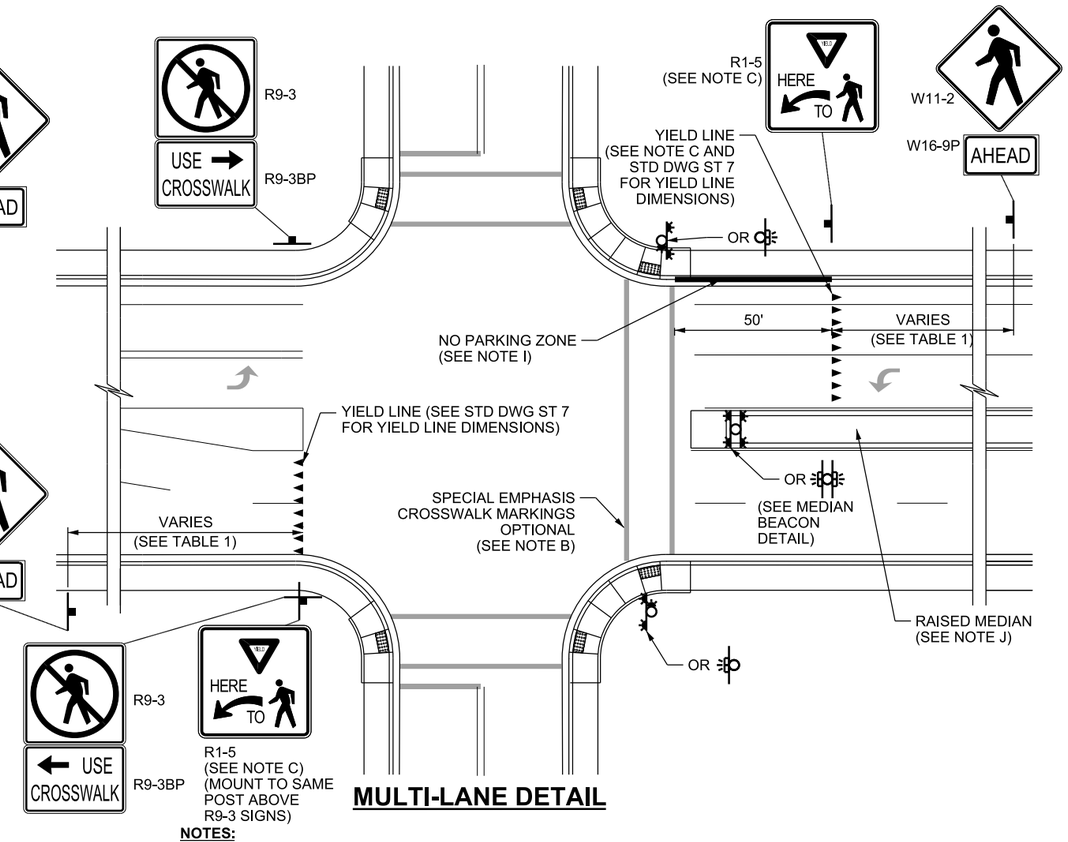


## MULTI-LANE DETAIL

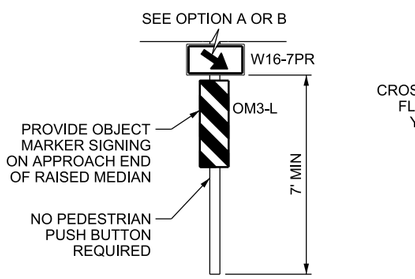


## MEDIAN BEACON DETAIL

15 FT TRAFFIC SIGNAL POLE / LUMINAIRE POLE (SEE NOTES A, J, K, AND STD DWG SL 1E)

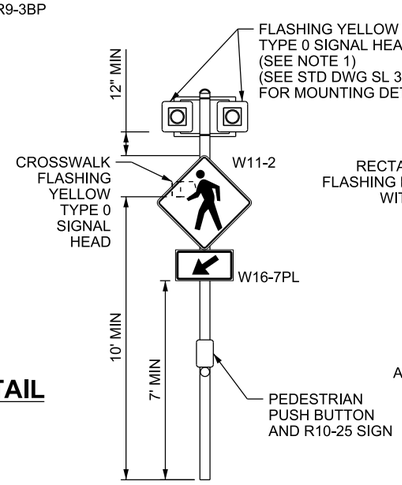


## OPTION A FLASHING BEACON DETAIL

15 FT TRAFFIC SIGNAL POLE / LUMINAIRE POLE (SEE NOTES A, H AND STD DWG SL 1E)

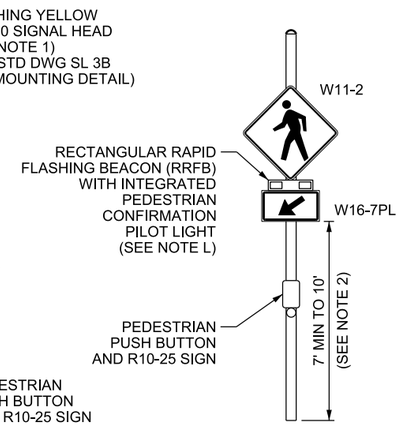


## OPTION B RRFB DETAIL

15 FT TRAFFIC SIGNAL POLE / LUMINAIRE POLE (SEE NOTES A, H, AND STD DWG SL 1E)

**LEGEND**

- YELLOW TYPE 0 SIGNAL HEAD
- DETECTABLE WARNING SURFACE
- GROUND MOUNT SIGN
- OPTION A
- OPTION A: BACK-TO-BACK (SEE NOTE K)
- OPTION B
- OPTION B: BACK-TO-BACK (SEE NOTE K)

TABLE 1
GUIDELINES FOR ADVANCE PLACEMENT OF PEDESTRIAN CROSSING WARNING SIGNS
(SEE UTAH MUTCD TABLE 2C-4 FOR COMPLETE TABLE)

| POSTED SPEED | ADVANCE PLACEMENT DISTANCE |
|---|---|
| 20-35 MPH | 100 FT |
| 40 MPH (SEE NOTE E) | 125 FT |

**NOTES:**

1. DO NOT PLACE RETROREFLECTIVE TAPE ON TYPE 0 SIGNAL HEAD BACKPLATES.
2. INCREASE MOUNTING HEIGHT OF W11-2 SIGN AND W16-7PL PLAQUE IF BLOCKED BY OTHER SIGNS OR OBSTRUCTIONS. USE A 10-FT TO BOTTOM OF SIGN MOUNTING HEIGHT FOR OPTION B ON OUTSIDE SHOULDER IN MULTI-LANE SITUATIONS TO PREVENT VISUAL BLOCKING FROM R1-5 SIGN.

**DESIGN-ONLY NOTES:**

A. INSTALL STREET LIGHTING UNLESS DIRECTED OTHERWISE BY REGION TRAFFIC OPERATIONS ENGINEER.

B. USE SPECIAL EMPHASIS CROSSWALK MARKINGS WHEN REQUIRED BY REGION TRAFFIC OPERATIONS ENGINEER. SEE STD DWG ST 7.

C. PLACE YIELD LINE 4 FT FROM CROSSWALK AT INTERSECTIONS ON SINGLE-LANE APPROACHES OR 50 FT FOR MULTI-LANE APPROACHES. USE "YIELD HERE TO PEDESTRIANS" R1-5 SIGN FOR MULTI-LANE APPROACHES.

D. REFER TO UTAH MUTCD PART 7 FOR REQUIREMENTS AT SCHOOL CROSSINGS.

E. DO NOT USE POST-MOUNTED FLASHING BEACON CROSSWALK WHEN POSTED SPEED EXCEEDS 35 MPH UNLESS OTHERWISE DIRECTED BY REGION TRAFFIC OPERATIONS ENGINEER.

F. DO NOT INSTALL FLASHING BEACON CROSSWALK WITHIN A REDUCED SPEED SCHOOL ZONE.

G. A MULTI-LANE APPROACH HAS TWO OR MORE LANES MOVING TOWARD THE INTERSECTION, INCLUDING TURNING LANES.

H. DO NOT INSTALL POST-MOUNTED FLASHING BEACONS WHERE THERE ARE FOUR OR MORE LANES, INCLUDING TURNING LANES, IN ONE DIRECTION.

I. PLACE "NO PARKING" SIGNS TO PROHIBIT PARKING 50 FT BEFORE CROSSWALK. NO ACCESSES ARE ALLOWED IN THIS AREA.

J. RAISED MEDIAN CONFIGURATION DETERMINED BY LOCATION NEEDS. SEE GW SERIES STD DWGS. MEET LATERAL OFFSET REQUIREMENTS.

K. BACK-TO-BACK CONSISTS OF W11-2 AND W16-7PL SIGNS AND FLASHING BEACONS FACING OPPOSITE DIRECTIONS MOUNTED ON THE SAME POLE.

L. MEET FHWA INTERIM APPROVAL (IA-21) REQUIREMENTS FOR RECTANGULAR RAPID FLASHING BEACON.

M. RECTANGULAR RAPID FLASHING BEACON CAN ONLY BE USED ON NON-CONTROLLED APPROACHES.

N. DO NOT MIX POST-MOUNTED BEACON TYPES AT A CROSSWALK.

SUPPLEMENTAL DRAWING

REVISIONS

| NO. | DATE | APPR. | REMARKS |
|---|---|---|---|
| 1 | 2/22/18 | JS | UPDATED NOTES, CALLOUTS AND GRAPHICS. DELETED RRFB FROM STD DWGS. |
| 2 | 8/30/18 | JS | ADDED RRFB OPTION. CHANGED SINGLE LANE DETAIL TO HAVE OPTION A BACK-TO-BACK. |

**UTAH DEPARTMENT OF TRANSPORTATION**
STANDARD DRAWINGS FOR ROAD AND BRIDGE CONSTRUCTION
SALT LAKE CITY, UTAH

RECOMMENDED FOR APPROVAL — AUG. 30, 2018 DATE
CHAIRMAN STANDARDS COMMITTEE APPROVED — AUG. 30, 2018 DATE
DEPUTY DIRECTOR — DATE

STANDARD DRAWING TITLE: POST-MOUNTED FLASHING BEACON AT AN INTERSECTION CROSSWALK

STD. DWG. NO. SL 6E

DGN File:Q:\Standards&Specs\Section\2017Section\All Supp Issues\Issue # 6 08-30-2018\Drawings\SL06E.dgn
12-SEP-2018

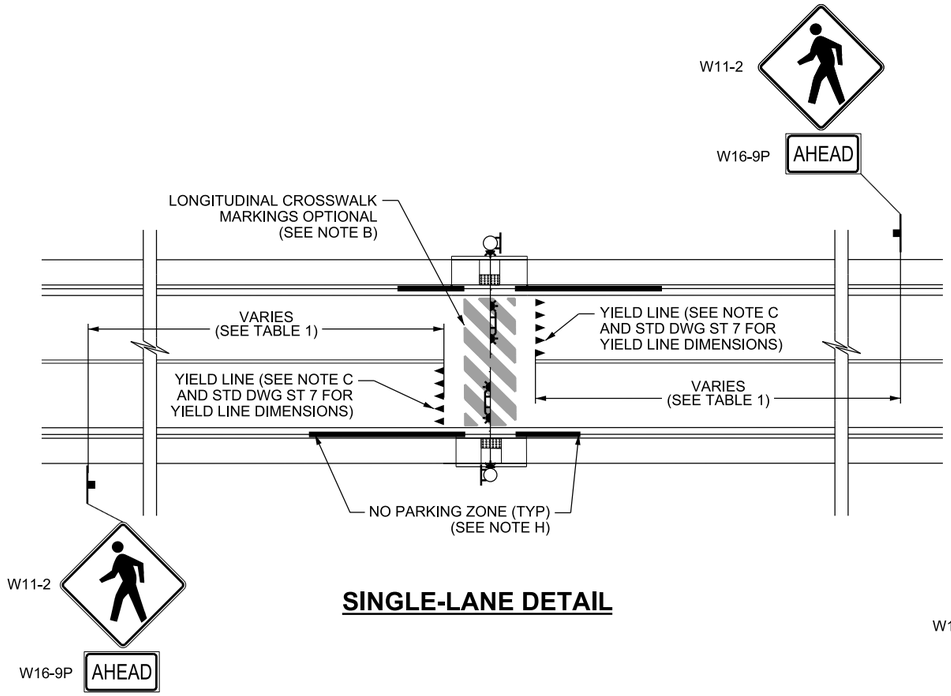


## SINGLE-LANE DETAIL

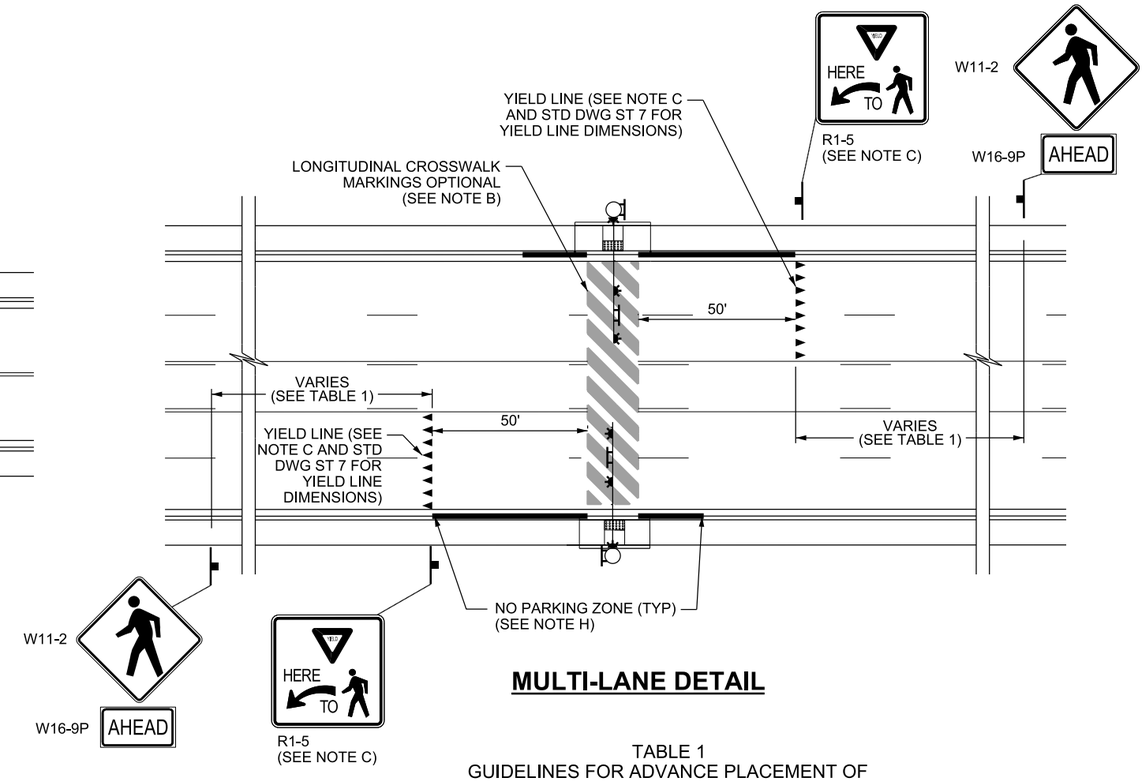


## MULTI-LANE DETAIL

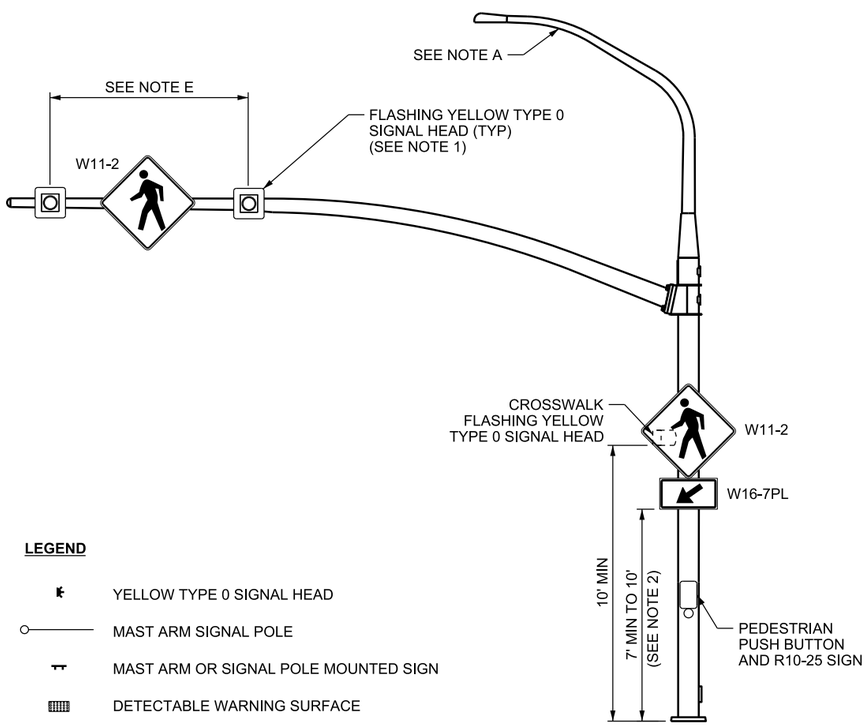


## OVERHEAD DETAIL

**LEGEND**

- YELLOW TYPE 0 SIGNAL HEAD
- MAST ARM SIGNAL POLE
- MAST ARM OR SIGNAL POLE MOUNTED SIGN
- DETECTABLE WARNING SURFACE
- GROUND MOUNT SIGN

TABLE 1
GUIDELINES FOR ADVANCE PLACEMENT OF PEDESTRIAN CROSSING WARNING SIGNS
(SEE UTAH MUTCD TABLE 2C-4 FOR COMPLETE TABLE)

| POSTED SPEED | ADVANCE PLACEMENT DISTANCE |
|---|---|
| 20-35 MPH | 100 FT |
| 40 MPH | 125 FT |
| 45 MPH | 175 FT |

**NOTES:**

1. DO NOT PLACE RETROREFLECTIVE TAPE ON TYPE 0 SIGNAL HEAD BACKPLATES.
2. INCREASE MOUNTING HEIGHT OF W11-2 SIGN AND W16-7PL PLAQUE IF BLOCKED BY OTHER SIGNS OR OBSTRUCTIONS. USE A 10 FT MOUNTING HEIGHT TO BOTTOM OF W16-7PL PLAQUE IN MULTI-LANE SITUATIONS TO PREVENT VISUAL BLOCKING BY R1-5 SIGN.

**DESIGN-ONLY NOTES:**

A. INSTALL STREET LIGHTING UNLESS DIRECTED OTHERWISE BY REGION TRAFFIC OPERATIONS ENGINEER.

B. USE LONGITUDINAL CROSSWALK MARKINGS WHEN REQUIRED BY REGION TRAFFIC OPERATIONS ENGINEER.

C. PLACE YIELD LINE 4 FT FROM CROSSWALK ON SINGLE-LANE APPROACHES OR 50 FT FOR MULTI-LANE APPROACHES. USE "YIELD HERE TO PEDESTRIANS" R1-5 SIGN FOR MULTI-LANE APPROACHES.

D. REFER TO UTAH MUTCD PART 7 FOR REQUIREMENTS AT SCHOOL CROSSINGS.

E. CENTER SIGNAL HEAD IN EACH THRU LANE. PROVIDE W11-2 SIGN BETWEEN ALL SIGNAL HEADS. FOR SINGLE THRU LANE APPROACHES, CENTER W11-2 SIGN IN THE LANE AND SPACE SIGNAL HEADS AT LEAST 8 FT APART.

F. DO NOT INSTALL FLASHING BEACON CROSSWALK ON ROADWAYS WITH SPEEDS GREATER THAN 45 MPH UNLESS DIRECTED BY REGION TRAFFIC OPERATIONS ENGINEER. SEE STD DWG PA 6.

G. PLACE FLASHING BEACON ASSEMBLIES ON A SINGLE OR TWO SEPARATE MAST ARMS.

H. PLACE "NO PARKING SIGNS" TO PROHIBIT PARKING 50 FT BEFORE CROSSWALK AND 20 FT AFTER CROSSWALK FOR EACH APPROACH. NO ACCESSES ARE ALLOWED IN THIS AREA.

I. DO NOT INSTALL FLASHING BEACON CROSSWALK WITHIN A REDUCED SPEED SCHOOL ZONE.

J. A MULTI-LANE APPROACH HAS TWO OR MORE LANES MOVING TOWARD THE INTERSECTION, INCLUDING TURNING LANES.

SUPPLEMENTAL DRAWING

REVISIONS

| NO. | DATE | APPR. | REMARKS |
|---|---|---|---|

**UTAH DEPARTMENT OF TRANSPORTATION**
STANDARD DRAWINGS FOR ROAD AND BRIDGE CONSTRUCTION
SALT LAKE CITY, UTAH

RECOMMENDED FOR APPROVAL — AUG 30, 2018 DATE
CHAIRMAN STANDARDS COMMITTEE APPROVED — AUG 30, 2018 DATE
DEPUTY DIRECTOR

OVERHEAD FLASHING BEACON AT A MIDBLOCK CROSSWALK
STANDARD DRAWING TITLE

STD. DWG. NO.
SL 6F

DGN File: D:\StandardsandSpecsSection\2017Section\All Supp Issues\Issue # 6 08-30-2018\Drawings\SL06F.dgn
12-SEP-2018

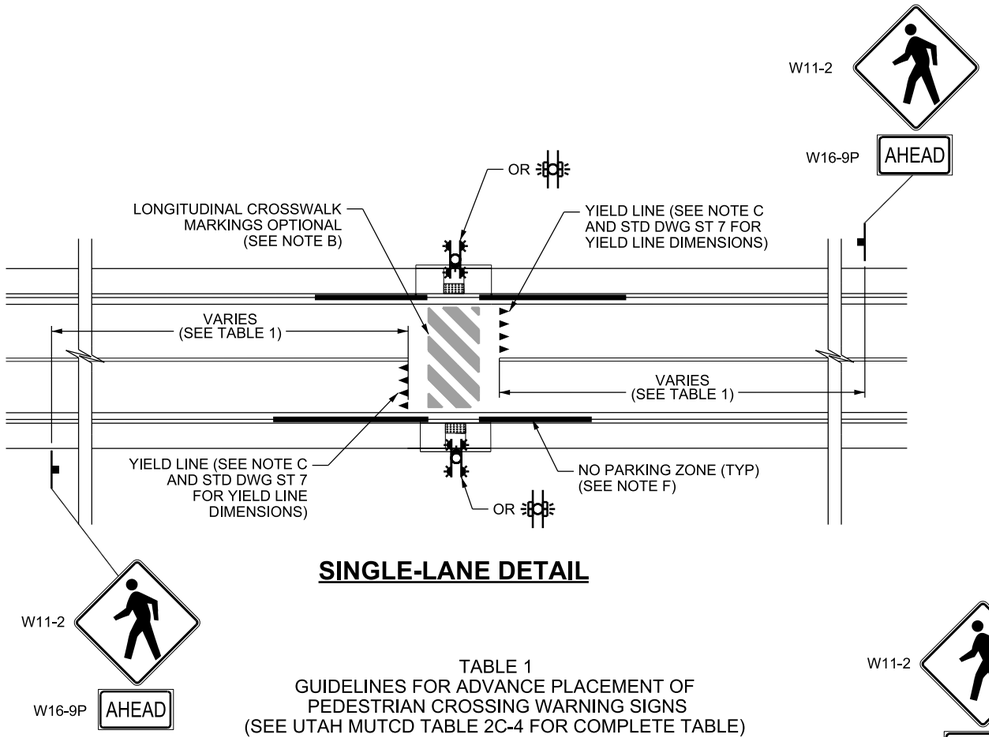


## SINGLE-LANE DETAIL

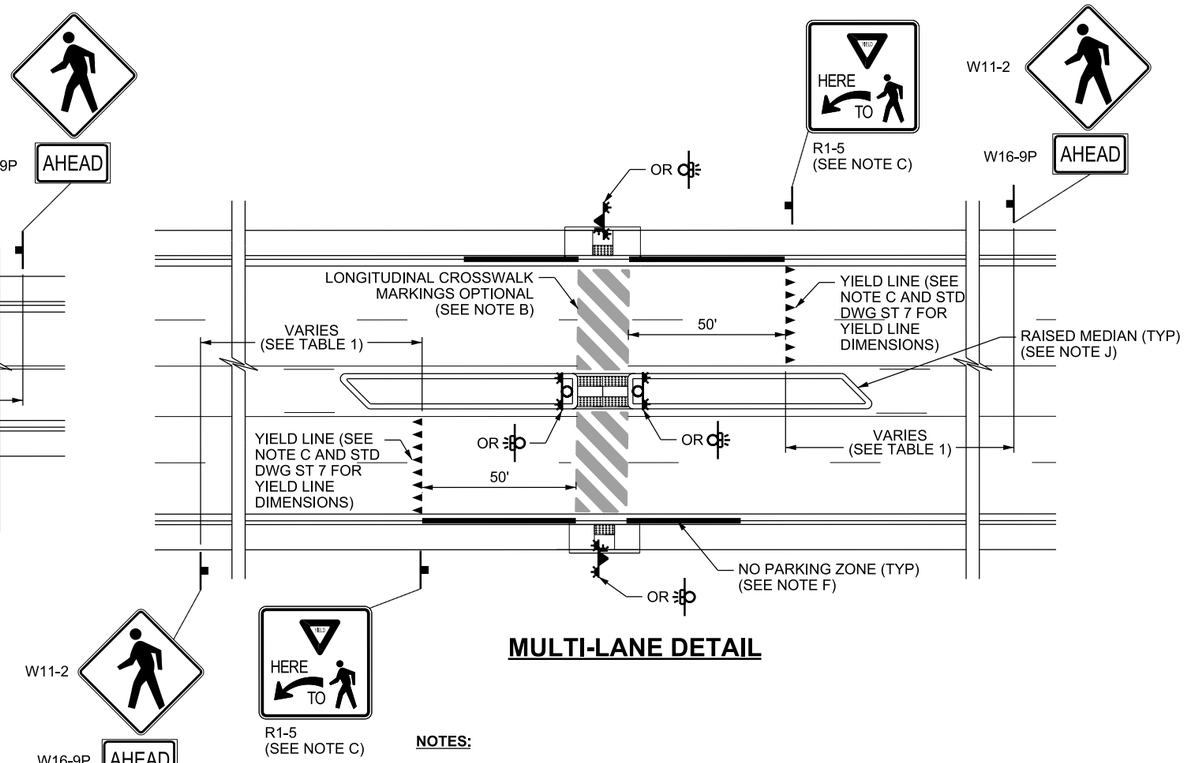


## MULTI-LANE DETAIL

TABLE 1
GUIDELINES FOR ADVANCE PLACEMENT OF PEDESTRIAN CROSSING WARNING SIGNS
(SEE UTAH MUTCD TABLE 2C-4 FOR COMPLETE TABLE)

| POSTED SPEED | ADVANCE PLACEMENT DISTANCE |
|---|---|
| 20-35 MPH | 100 FT |
| 40 MPH (SEE NOTE E) | 125 FT |

**NOTES:**

1. DO NOT PLACE RETROREFLECTIVE TAPE ON TYPE 0 SIGNAL HEAD BACKPLATES.
2. INCREASE MOUNTING HEIGHT OF W11-2 SIGN AND W16-7PL PLAQUE IF BLOCKED BY OTHER SIGNS OR OBSTRUCTIONS. USE A 10-FT TO BOTTOM OF SIGN MOUNTING HEIGHT FOR OPTION B ON OUTSIDE SHOULDER IN MULTI-LANE SITUATIONS TO PREVENT VISUAL BLOCKING FROM R1-5 SIGN.

**DESIGN-ONLY NOTES:**

A. INSTALL STREET LIGHTING UNLESS DIRECTED OTHERWISE BY REGION TRAFFIC OPERATIONS ENGINEER.

B. USE LONGITUDINAL CROSSWALK MARKINGS WHEN REQUIRED BY REGION TRAFFIC OPERATIONS ENGINEER.

C. PLACE YIELD LINE 4 FT FROM CROSSWALK ON SINGLE-LANE APPROACHES OR 50 FT FOR MULTI-LANE APPROACHES. USE "YIELD HERE TO PEDESTRIANS" R1-5 SIGN FOR MULTI-LANE APPROACHES.

D. REFER TO UTAH MUTCD PART 7 FOR REQUIREMENTS AT SCHOOL CROSSINGS.

E. DO NOT USE POST-MOUNTED FLASHING BEACON CROSSWALK WHEN POSTED SPEED EXCEEDS 35 MPH UNLESS OTHERWISE DIRECTED BY REGION TRAFFIC OPERATIONS ENGINEER.

F. PLACE "NO PARKING" SIGNS TO PROHIBIT PARKING 50 FT BEFORE CROSSWALK AND 20 FT AFTER CROSSWALK FOR EACH APPROACH. NO ACCESSES ARE ALLOWED IN THIS AREA.

G. A MULTI-LANE APPROACH HAS TWO OR MORE LANES MOVING TOWARD THE INTERSECTION, INCLUDING TURNING LANES.

H. DO NOT INSTALL FLASHING BEACON CROSSWALK WITHIN A REDUCED SPEED SCHOOL ZONE.

I. DO NOT INSTALL POST-MOUNTED FLASHING BEACONS WHERE THERE ARE FOUR OR MORE LANES, INCLUDING TURNING LANES, IN ONE DIRECTION.

J. RAISED MEDIAN DIMENSIONS DETERMINED BY LOCATION NEEDS. SEE GW SERIES STD DWGS. MEET LATERAL OFFSET REQUIREMENTS.

K. BACK-TO-BACK CONSISTS OF W11-2 AND W16-7P SIGNS AND FLASHING BEACONS FACING OPPOSITE DIRECTIONS MOUNTED ON THE SAME POLE.

L. MEET FHWA INTERIM APPROVAL (IA-21) REQUIREMENTS FOR RECTANGULAR RAPID FLASHING BEACON.

M. RECTANGULAR RAPID FLASHING BEACONS CAN ONLY BE USED ON NON-CONTROLLED APPROACHES.

N. DO NOT MIX POST-MOUNTED BEACON TYPES AT A CROSSWALK.

**LEGEND**

- YELLOW TYPE 0 SIGNAL HEAD
- DETECTABLE WARNING SURFACE
- GROUND MOUNT SIGN
- OPTION A
- OPTION A: BACK-TO-BACK (SEE NOTE K)
- OPTION B
- OPTION B: BACK-TO-BACK (SEE NOTE K)
- OPTION C

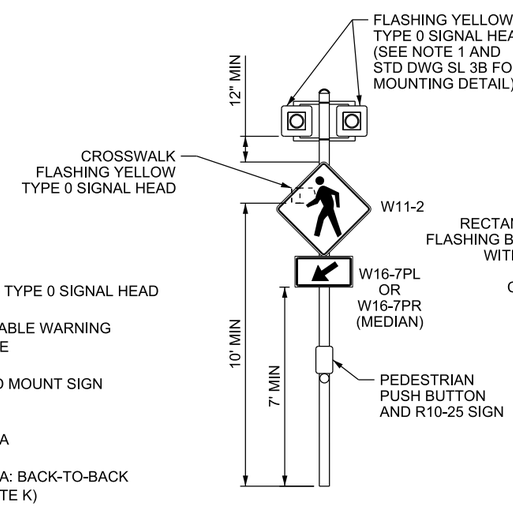


## OPTION A FLASHING BEACON DETAIL

15 FT TRAFFIC SIGNAL POLE / LUMINAIRE POLE (SEE NOTES A, I AND STD DWG SL 1E)

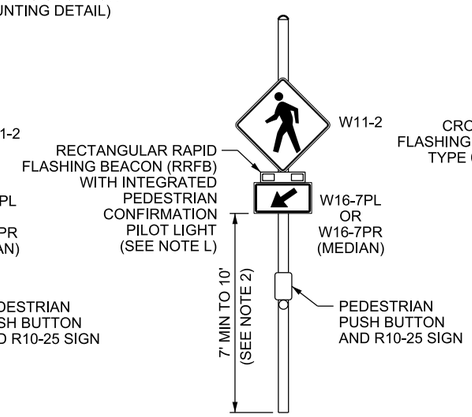


## OPTION B RRFB DETAIL

15 FT TRAFFIC SIGNAL POLE / LUMINAIRE POLE (SEE NOTES A, I, AND STD DWG SL 1E)

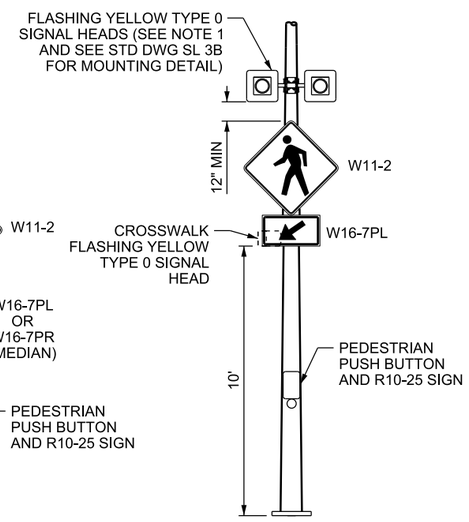


## OPTION C HIGH-MOUNT FLASHING BEACON DETAIL

LUMINAIRE POLE (SEE NOTES A, I AND STD DWG SL 5B)

SUPPLEMENTAL DRAWING

REVISIONS

| NO. | DATE | APPR. | REMARKS |
|---|---|---|---|
| 1 | 2/22/18 | JS | REVISED CALLOUTS, NOTES AND GRAPHICS. DELETED RRFB FROM STD DWGS. DELETED YIELD LINE DISTANCE TABLE. |
| 2 | 8/30/18 | JS | ADDED RRFB OPTION. CHANGED SINGLE LANE DETAIL TO HAVE OPTION A BACK-TO-BACK. |

**UTAH DEPARTMENT OF TRANSPORTATION**
STANDARD DRAWINGS FOR ROAD AND BRIDGE CONSTRUCTION
SALT LAKE CITY, UTAH

RECOMMENDED FOR APPROVAL — AUG. 30, 2018 DATE
CHAIRMAN STANDARDS COMMITTEE APPROVED — AUG. 30, 2018 DATE
DEPUTY DIRECTOR

STANDARD DRAWING TITLE
POST-MOUNTED FLASHING BEACON AT A MIDBLOCK CROSSWALK

STD. DWG. NO.
SL 6G

DGN File:D:\Standards\Specs\Section\2017Section\All Supp Issues\Issue # 6 08-30-2018\Drawings\SL06G.dgn
12-SEP-2018

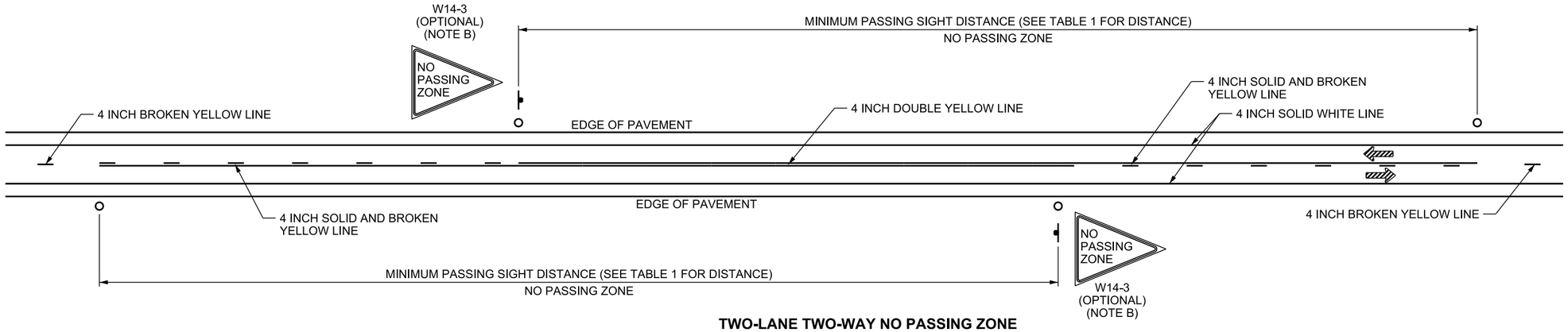


**TWO-LANE TWO-WAY NO PASSING ZONE**

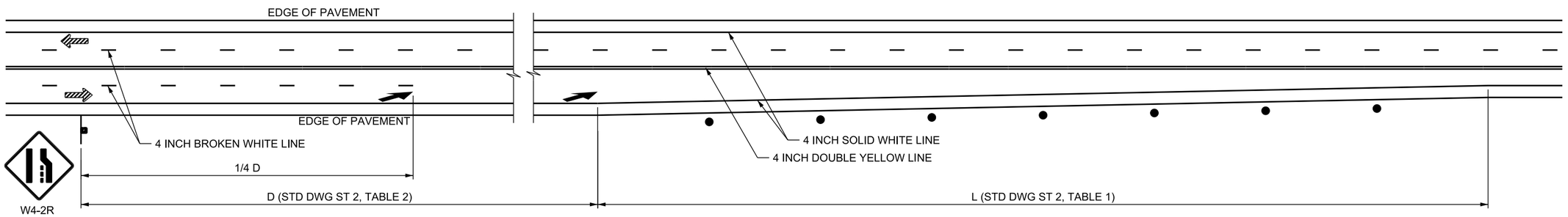


**LANE REDUCTION TRANSITION**

**TABLE 1 - MINIMUM PASSING SIGHT DISTANCES**

| SPEED (MPH) (NOTE C) | MINIMUM PASSING SIGHT DISTANCE (FT) |
|---|---|
| 25 | 450 |
| 30 | 500 |
| 35 | 550 |
| 40 | 620 |
| 45 | 700 |
| 50 | 800 |
| 55 | 900 |
| 60 | 1000 |
| 65 | 1100 |
| 70 | 1200 |
| 75 | 1300 |
| 80 | 1400 |

**PAVEMENT MARKING LINE DIMENSIONS**

| TYPE | WIDTH (INCHES) | LENGTH (FT) | GAP (FT) |
|---|---|---|---|
| SOLID LINE | 4 | CONTINUOUS | N/A |
| SOLID LINE | 8 | CONTINUOUS | N/A |
| BROKEN LINE | 4 | 10 | 30 |
| LANE DROP | 8 | 3 | 9 |
| DOTTED LINE | 4 | 2 | 6 |
| DOTTED LINE | 8 | 2 | 6 |

**LEGEND:**

O ORANGE MAINTENANCE MARKER DELINEATORS (STD DWG GW SERIES)

● TYPE I DELINEATORS (MATCH ADJACENT PAVEMENT MARKING COLOR) (STD DWG GW SERIES)

SIGN, SIGN POST, AND SIGN BASE

**DESIGN NOTES:**

A. USE THE AASHTO A POLICY ON GEOMETRIC DESIGN OF HIGHWAYS AND STREETS FOR DESIGN OF ROADWAY ELEMENTS NOT SHOWN.

B. REFER TO THE UTAH MANUAL ON UNIFORM TRAFFIC CONTROL DEVICES, SECTION 3B.02 FOR APPLICATION OF PASSING AND NO PASSING ZONES.

C. USE THE GREATER OF (IN ORDER OF PRECEDENCE):
- THE 85TH PERCENTILE SPEED
- OPERATING SPEED DETERMINED BY DESIGN TEAM
- POSTED SPEED

D. USE THE AASHTO ROADSIDE DESIGN GUIDE AND THE UDOT ROADWAY DESIGN MANUAL FOR CLEAR ZONE REQUIREMENTS.

**NOTES:**

1. PLACE AN EDGE LINE IN AREAS WHERE PAVEMENT EXTENDS TO CURB AND GUTTER, TO DEFINE THE TRAVEL PATH OF A TYPICAL LANE (12 FT WIDE) WHEN THE LATERAL DISTANCE FROM OUTSIDE 4 INCH BROKEN YELLOW LINE OR PERMISSIVE TURN LANE TO LIP OF GUTTER IS 16 FT OR GREATER. THE REGION TRAFFIC ENGINEER CAN AUTHORIZE EXCEPTIONS TO EXCLUDE EDGE LINES IN THESE AREAS.

2. PLACE A YELLOW LINE ON THE LEFT EDGE OF EACH ROADWAY OF DIVIDED ROADS.

3. OBTAIN APPROVAL FROM THE REGION TRAFFIC ENGINEER FOR CHANGES TO EXISTING OR INSTALLATION OF NEW PASSING OR NO PASSING ZONES.

4. SEE GW SERIES STD DWGS FOR DELINEATION HARDWARE.

5. MAINTAIN 4 INCH SPACE BETWEEN TWO 4 INCH SOLID YELLOW LINES OR BETWEEN 4 INCH SOLID YELLOW LINE AND 4 INCH BROKEN YELLOW LINE.

6. LANE REDUCTION ARROW REQUIRED FOR SPEEDS 45 MPH OR GREATER. SEE THE UTAH MANUAL ON UNIFORM TRAFFIC CONTROL DEVICES (MUTCD) FOR DIMENSIONS OF LANE REDUCTION ARROW.

SUPPLEMENTAL DRAWING

REVISIONS

| NO. | DATE | APPR. | REMARKS |
|---|---|---|---|

**UTAH DEPARTMENT OF TRANSPORTATION**
STANDARD DRAWINGS FOR ROAD AND BRIDGE CONSTRUCTION
SALT LAKE CITY, UTAH

RECOMMENDED FOR APPROVAL — AUG 30, 2018 DATE
CHAIRMAN STANDARDS COMMITTEE APPROVED — AUG 30, 2018 DATE
DEPUTY DIRECTOR

TYPICAL PAVEMENT MARKINGS NO PASS ZONE AND LANE REDUCTION

STANDARD DRAWING TITLE

STD. DWG. NO.
ST 1

DGN File: D:\Standards and Specs Section\2017 Section\All Supp Issues\Issue # 6 08-30-2018\Drawings\ST01.dgn
12-SEP-2018

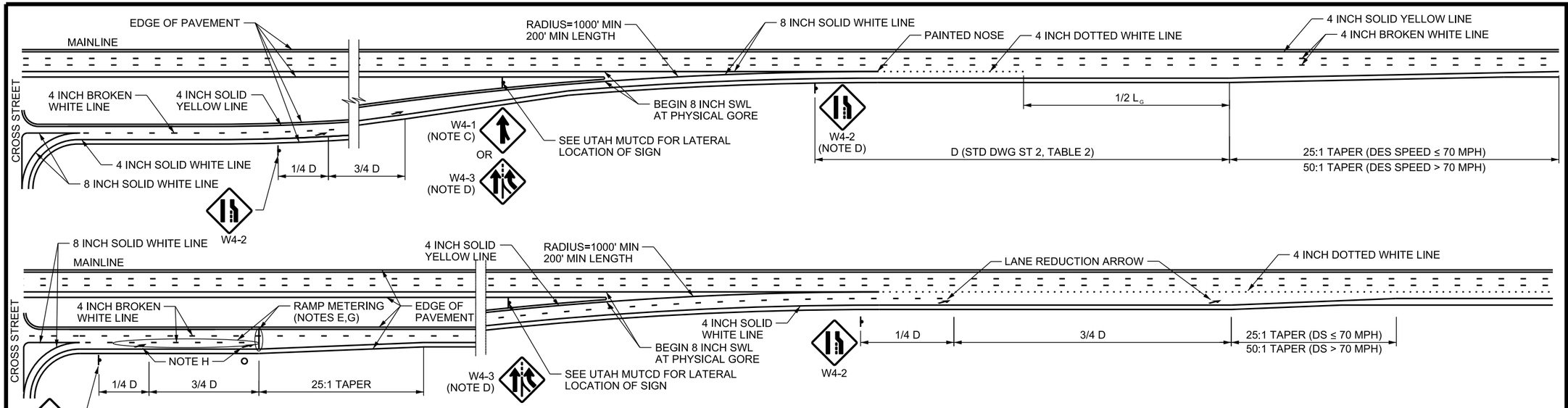


## PARALLEL ENTRANCE RAMP SIGNING & STRIPING

ACCEPTABLE FOR ALL LOCATIONS; USE WITH LIMITED GAP CONDITIONS, WHERE PROJECTED COMBINED RAMP AND MAINLINE ACCEPTANCE LANE VOLUME EXCEEDS 2400 PASSENGER CARS PER HOUR DURING THE PEAK HOUR

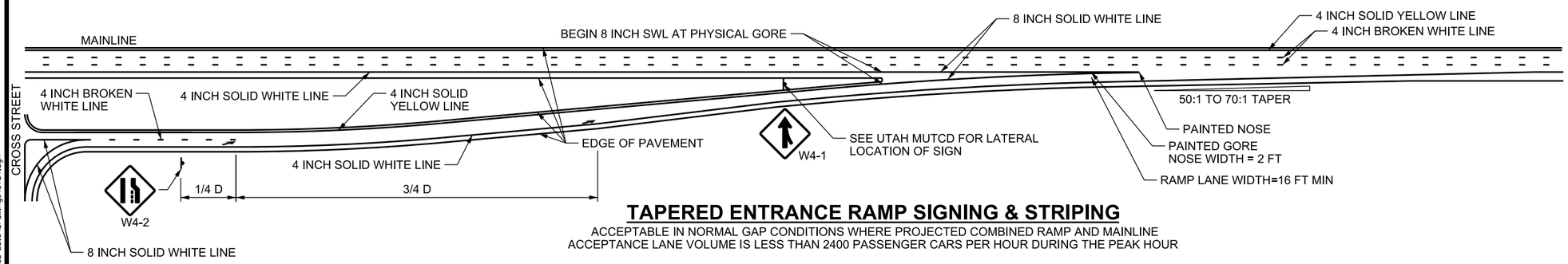


## TAPERED ENTRANCE RAMP SIGNING & STRIPING

ACCEPTABLE IN NORMAL GAP CONDITIONS WHERE PROJECTED COMBINED RAMP AND MAINLINE ACCEPTANCE LANE VOLUME IS LESS THAN 2400 PASSENGER CARS PER HOUR DURING THE PEAK HOUR

**DESIGN NOTES:**

A. REFER TO UDOT ROADWAY DESIGN MANUAL DM DRAWING 10.1 AND THE UTAH MANUAL OF UNIFORM TRAFFIC CONTROL DEVICES (MUTCD) FOR DESIGN OF ELEMENTS NOT SHOWN.

B. USE WB-67 FOR TURNING RADIUS FOR ALL TURNING MOVEMENTS.

C. USE MERGE SIGN (W4-1) WHEN THE FOLLOWING CONDITIONS ARE MET:
1. SINGLE LANE PARALLEL ENTRANCE RAMP OR
2. WHEN THE CALCULATED ACCELERATION PER AASHTO OR GAP ACCEPTANCE ARE NOT PROVIDED (SEE NOTES A AND E)
- DO NOT USE EITHER THE LANE ENDS SIGN (W4-2R) OR THE ADDED LANE SIGN (W4-3) WHEN USING THE W4-1 SIGN

D. USE ADDED LANE SIGN (W4-3) WHEN THE CALCULATED ACCELERATION PER AASHTO AND GAP ACCEPTANCE IS PROVIDED (SEE NOTES A AND E)
- DO NOT PLACE LANE ENDS (W4-2) SIGN WITHIN 200 FT OF THE PHYSICAL GORE
- PLACE LANE ENDS SIGN (W4-2) ONLY WHEN USING THE W4-3 SIGN

E. RAMP METER:
- PLACE THE RAMP METER STOP LINE AT THE CALCULATED STORAGE PER AT SERIES STD DWGS WHERE RAMP METER IS USED
- VERIFY RAMP METER STORAGE LENGTHS WITH CENTRAL TRAFFIC OPERATIONS DIVISION

F. SEE STD DWG ST 1 FOR LINE DIMENSIONS.

G. PLACE ITEMS ONLY WHEN RAMP WILL BE METERED. PLACE STOP LINE AT CALCULATED RAMP METER QUEUE FROM AT GRADE RAMP TERMINAL.

H. LANE-REDUCTION ARROWS ARE OPTIONAL FOR SPEEDS LESS THAN 45 MPH.

I. STANDARDS SHOWN ARE MINIMUM VALUES. EXCEED STANDARDS WHERE CONDITIONS PERMIT.

SUPPLEMENTAL DRAWING

REVISIONS

| NO. | DATE | APPR. | REMARKS |
|---|---|---|---|
| | | | |

**UTAH DEPARTMENT OF TRANSPORTATION**
STANDARD DRAWINGS FOR ROAD AND BRIDGE CONSTRUCTION
SALT LAKE CITY, UTAH

RECOMMENDED FOR APPROVAL — AUG 30, 2018 DATE
CHAIRMAN, STANDARDS COMMITTEE APPROVED — AUG 30, 2018 DATE
DEPUTY DIRECTOR

ENTRANCE RAMP PAVEMENT MARKINGS
STANDARD DRAWING TITLE

STD. DWG. NO.
ST 4

DGN File:D:\StandardsandSpecsSection\2017Section\All Supp Issues\Issue # 6 08-30-2018\Drawings\ST04.dgn
12-SEP-2018

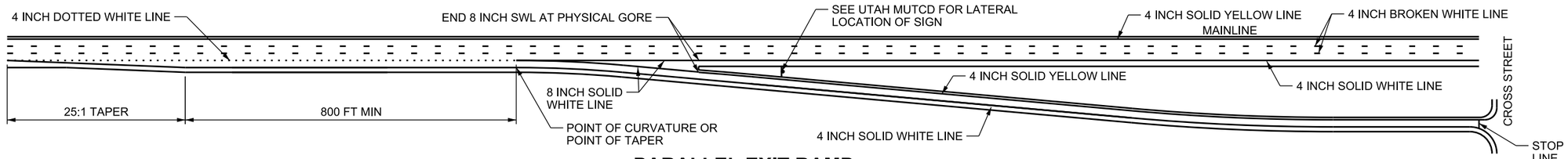


## PARALLEL EXIT RAMP

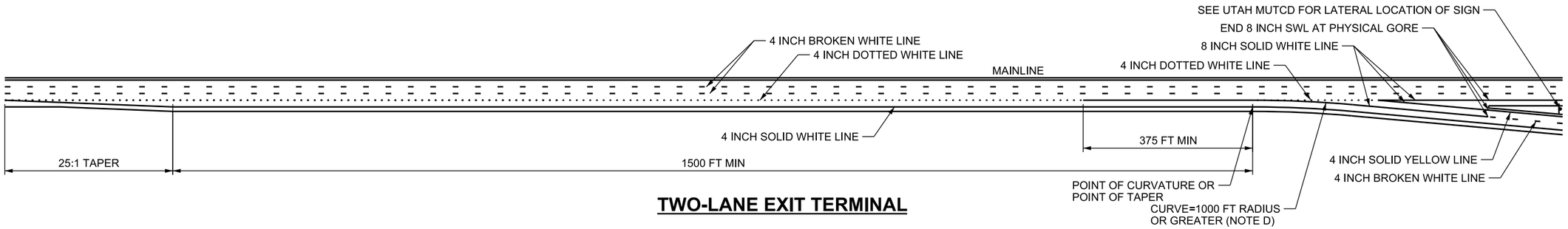


## TWO-LANE EXIT TERMINAL

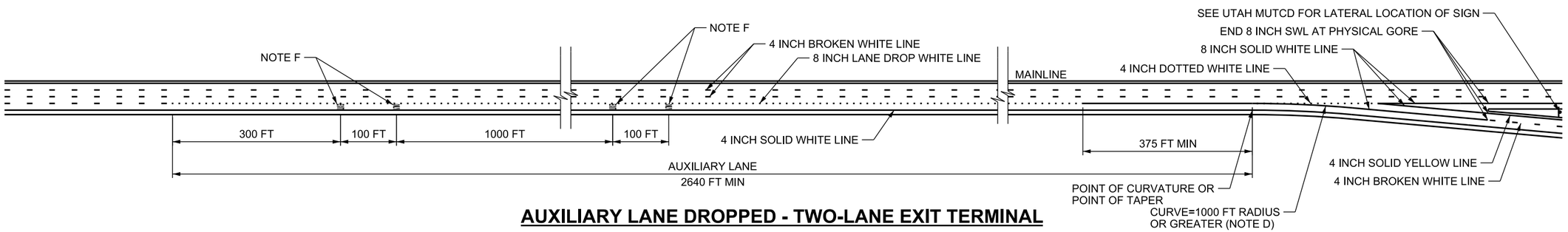


## AUXILIARY LANE DROPPED - TWO-LANE EXIT TERMINAL

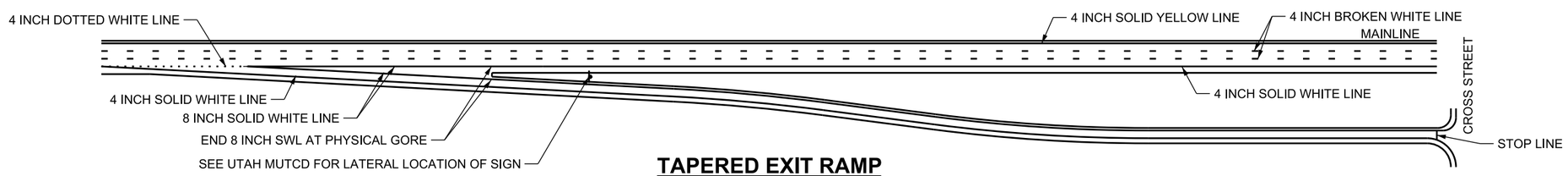


## TAPERED EXIT RAMP

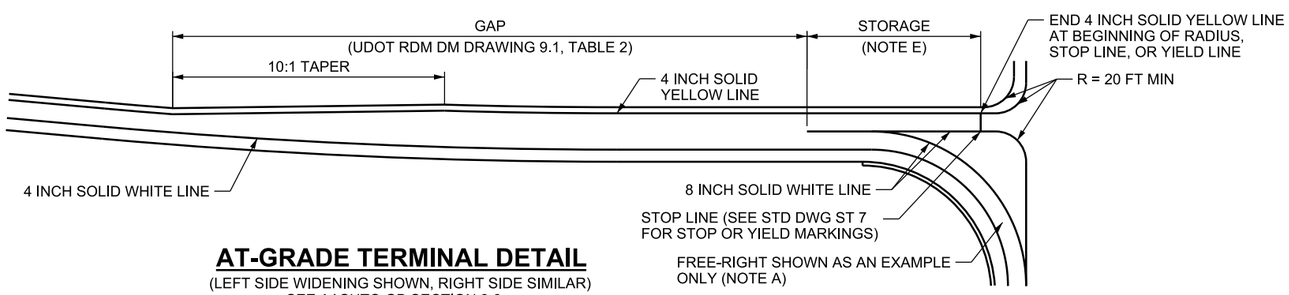


## AT-GRADE TERMINAL DETAIL

(LEFT SIDE WIDENING SHOWN, RIGHT SIDE SIMILAR)
SEE AASHTO GB SECTION 9.6

**DESIGN NOTES:**

A. REFER TO THE UDOT ROADWAY DESIGN MANUAL DM DRAWING 10.2 AND THE UTAH MANUAL ON UNIFORM TRAFFIC CONTROL DEVICES FOR DESIGN OF ROADWAY ELEMENTS NOT SHOWN ON THIS STANDARD DRAWING.

B. USE WB-67 FOR TURNING RADIUS FOR ALL TURNING MOVEMENTS.

C. SEE THE UDOT ROADWAY DESIGN MANUAL FOR CROSS SECTION ELEMENT REQUIREMENTS INCLUDING LANE AND SHOULDER WIDTHS.

D. IF THE DIVERGENCE ANGLE IS BETWEEN 2°-5° AND A CURVE WITH A 1000 FT RADIUS OR GREATER IS USED, SUPERELEVATION OF THIS CURVE IS NOT REQUIRED.

E. COORDINATE REQUIRED STORAGE LENGTH WITH REGION TRAFFIC ENGINEER.

F. USE 20 INCH X 10 FT LETTERS FOR "EXIT" AND "ONLY" PAVEMENT MESSAGES.

G. SEE STD DWG ST 1 FOR LINE DIMENSIONS.

H. STANDARDS SHOWN ARE MINIMUM VALUES. EXCEED STANDARDS WHERE CONDITIONS PERMIT.

SUPPLEMENTAL DRAWING

| NO. | DATE | APPR. | REMARKS |
|---|---|---|---|
| | | | |

REVISIONS

**UTAH DEPARTMENT OF TRANSPORTATION**
STANDARD DRAWINGS FOR ROAD AND BRIDGE CONSTRUCTION
SALT LAKE CITY, UTAH

RECOMMENDED FOR APPROVAL — AUG 30, 2018 DATE
CHAIRMAN STANDARDS COMMITTEE APPROVED — AUG 30, 2018 DATE
DEPUTY DIRECTOR

EXIT RAMP
PAVEMENT MARKINGS

STANDARD DRAWING TITLE

STD. DWG. NO.
ST 5

DGN File: D:\StandardsandSpecsSection\2017Section\All Supp Issues\Issue # 6 08-30-2018\Drawings\ST05.dgn
12-SEP-2018

**LANE DROP BEYOND THE INTERSECTION**

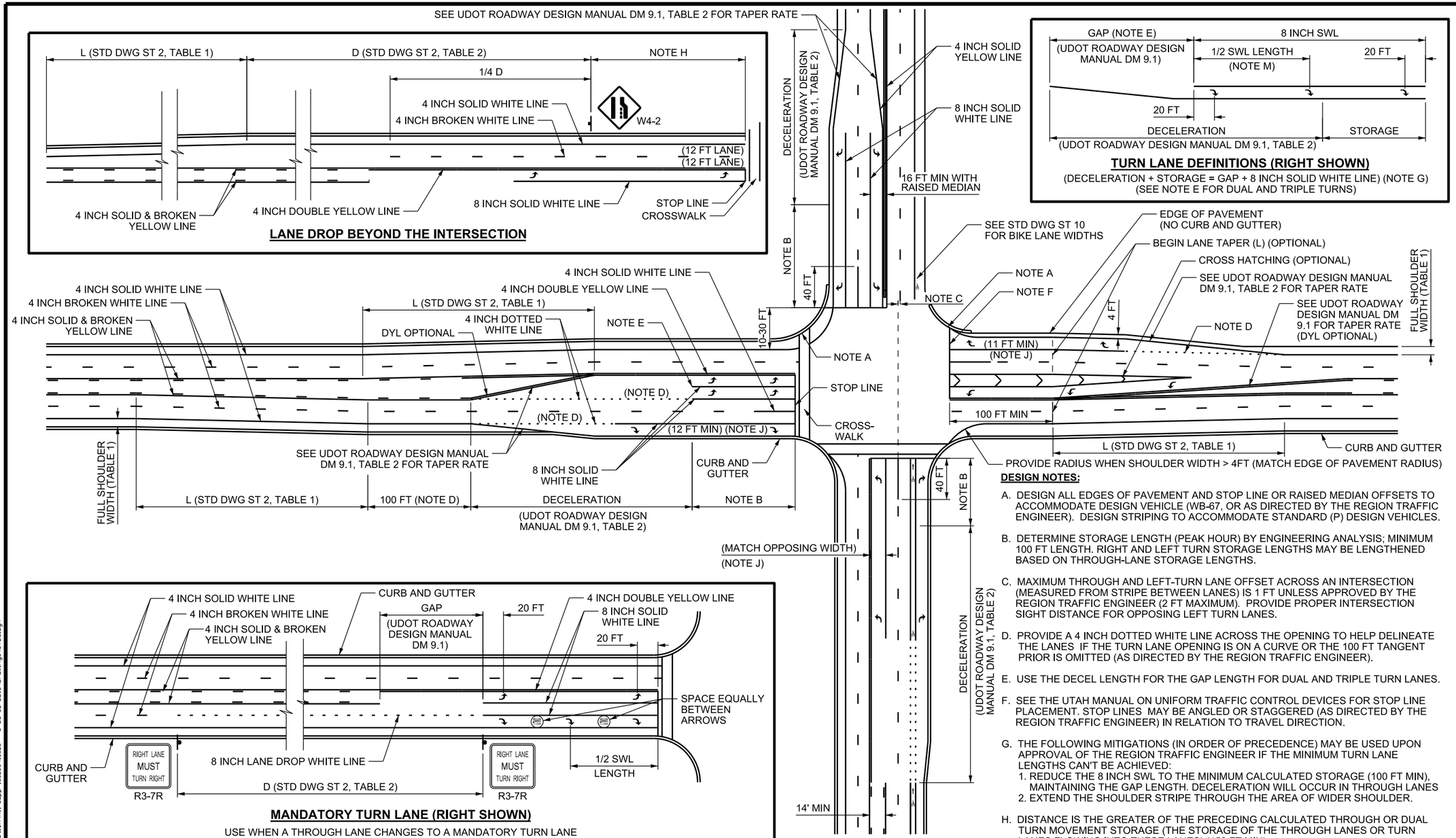


**DESIGN NOTES:**

A. DESIGN ALL EDGES OF PAVEMENT AND STOP LINE OR RAISED MEDIAN OFFSETS TO ACCOMMODATE DESIGN VEHICLE (WB-67, OR AS DIRECTED BY THE REGION TRAFFIC ENGINEER). DESIGN STRIPING TO ACCOMMODATE STANDARD (P) DESIGN VEHICLES.

B. DETERMINE STORAGE LENGTH (PEAK HOUR) BY ENGINEERING ANALYSIS; MINIMUM 100 FT LENGTH. RIGHT AND LEFT TURN STORAGE LENGTHS MAY BE LENGTHENED BASED ON THROUGH-LANE STORAGE LENGTHS.

C. MAXIMUM THROUGH AND LEFT-TURN LANE OFFSET ACROSS AN INTERSECTION (MEASURED FROM STRIPE BETWEEN LANES) IS 1 FT UNLESS APPROVED BY THE REGION TRAFFIC ENGINEER (2 FT MAXIMUM). PROVIDE PROPER INTERSECTION SIGHT DISTANCE FOR OPPOSING LEFT TURN LANES.

D. PROVIDE A 4 INCH DOTTED WHITE LINE ACROSS THE OPENING TO HELP DELINEATE THE LANES IF THE TURN LANE OPENING IS ON A CURVE OR THE 100 FT TANGENT PRIOR IS OMITTED (AS DIRECTED BY THE REGION TRAFFIC ENGINEER).

E. USE THE DECEL LENGTH FOR THE GAP LENGTH FOR DUAL AND TRIPLE TURN LANES.

F. SEE THE UTAH MANUAL ON UNIFORM TRAFFIC CONTROL DEVICES FOR STOP LINE PLACEMENT. STOP LINES MAY BE ANGLED OR STAGGERED (AS DIRECTED BY THE REGION TRAFFIC ENGINEER) IN RELATION TO TRAVEL DIRECTION.

G. THE FOLLOWING MITIGATIONS (IN ORDER OF PRECEDENCE) MAY BE USED UPON APPROVAL OF THE REGION TRAFFIC ENGINEER IF THE MINIMUM TURN LANE LENGTHS CAN'T BE ACHIEVED:
1. REDUCE THE 8 INCH SWL TO THE MINIMUM CALCULATED STORAGE (100 FT MIN), MAINTAINING THE GAP LENGTH. DECELERATION WILL OCCUR IN THROUGH LANES
2. EXTEND THE SHOULDER STRIPE THROUGH THE AREA OF WIDER SHOULDER.

H. DISTANCE IS THE GREATER OF THE PRECEDING CALCULATED THROUGH OR DUAL TURN MOVEMENT STORAGE (THE STORAGE OF THE THROUGH LANES OR TURN LANES FLOWING INTO THESE LANES) (150 FT MIN).

I. PROVIDE A TWO-WAY LEFT TURN LANE CONNECTING ADJACENT ACCESSES WHEN OPPOSING TAPERS OVERLAP OR AS DIRECTED BY THE REGION TRAFFIC ENGINEER.

J. LANE WIDTHS MAY BE REDUCED UPON APPROVAL OF THE REGION TRAFFIC ENGINEER: - THROUGH (11 FT MIN), RT TURN (10 FT MIN), LT TURN (11 FT MIN), AND MEDIAN (12 FT MIN)

K. PROVIDE A MINIMUM 100 FT TANGENT APPROACH SECTION PRIOR TO STOP LINES. USE THE SAME ENTRANCE AND EXIT BEARINGS FOR OPPOSING INTERSECTION DIRECTIONS.

L. USE THE AASHTO A POLICY ON GEOMETRIC DESIGN OF HIGHWAYS AND STREETS FOR DESIGN OF ROADWAY ELEMENTS NOT SHOWN ON THIS STANDARD DRAWING.

M. PLACE A THIRD ARROW AT ONE HALF THE DISTANCE OF THE 8 INCH SOLID WHITE LINE (SWL) IF THE 8 INCH SWL IS GREATER THAN 250 FT OR AT THE DIRECTION OF THE REGION TRAFFIC ENGINEER. PLACE ONLY THE TWO TURN ARROWS OTHERWISE. RIGHT TURN ARROWS ARE OPTIONAL IN NON-MANDATORY RIGHT TURN LANES.

N. STANDARDS SHOWN ARE MINIMUM VALUES. EXCEED STANDARDS WHERE FEASIBLE.




**MANDATORY TURN LANE (RIGHT SHOWN)**

USE WHEN A THROUGH LANE CHANGES TO A MANDATORY TURN LANE

| TABLE 1 - SHOULDER WIDTH* | | | |
|---|---|---|---|
| **DESIGN SPEED (MPH) OR** | **UNDER 40** | **40 - 55** | **OVER 55** |
| **VOLUME (AADT)**** | **UNDER 2000** | **2000 TO 6000** | **OVER 6000**** |
| FRONTAGE OR ACCESS ROAD | 2 FT | 4 FT | 8 FT |
| COLLECTOR ROAD | 4 FT | 8 FT | 10 FT |
| MINOR ARTERIAL | 4 FT | 8 FT | 10 FT |
| PRINCIPAL ARTERIAL | 4 FT | 8 FT | 12 FT |

*USE THE SMALLER SHOULDER WIDTH OF THE DESIGN SPEED OR THE VOLUME. USE A 12 FT SHOULDER TO WHERE ON-STREET PARKING IS PERMITTED OR FREQUENT ACCESSES.
**SHOULDER WIDTH MAY BE REDUCED BY 2 FT (OVER 6000 AADT COLUMN ONLY), IF TRUCK VOLUME IS < 15% OF AADT.

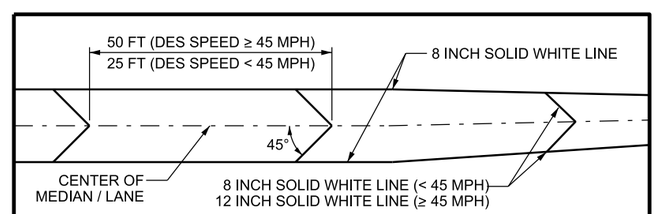


**MEDIAN/LANE HATCHING (OPTIONAL)**

SUPPLEMENTAL DRAWING

REVISIONS

| NO. | DATE | APPR. | REMARKS |
|---|---|---|---|

UTAH DEPARTMENT OF TRANSPORTATION
STANDARD DRAWINGS FOR ROAD AND BRIDGE CONSTRUCTION
SALT LAKE CITY, UTAH

RECOMMENDED FOR APPROVAL — AUG 30, 2018 DATE
CHAIRMAN STANDARDS COMMITTEE APPROVED — AUG 30, 2018 DATE
DEPUTY DIRECTOR

STANDARD DRAWING TITLE
INTERSECTION PAVEMENT MARKINGS

STD. DWG. NO.
ST 6

DGN File: Q:\Standardsand\SpecsSection\2017Section\All Supp Issues\Issue # 6 08-30-2018\Drawings\ST06.dgn
12-SEP-2018

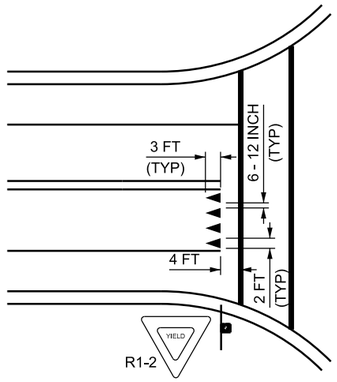


## TYPICAL YIELD LINE

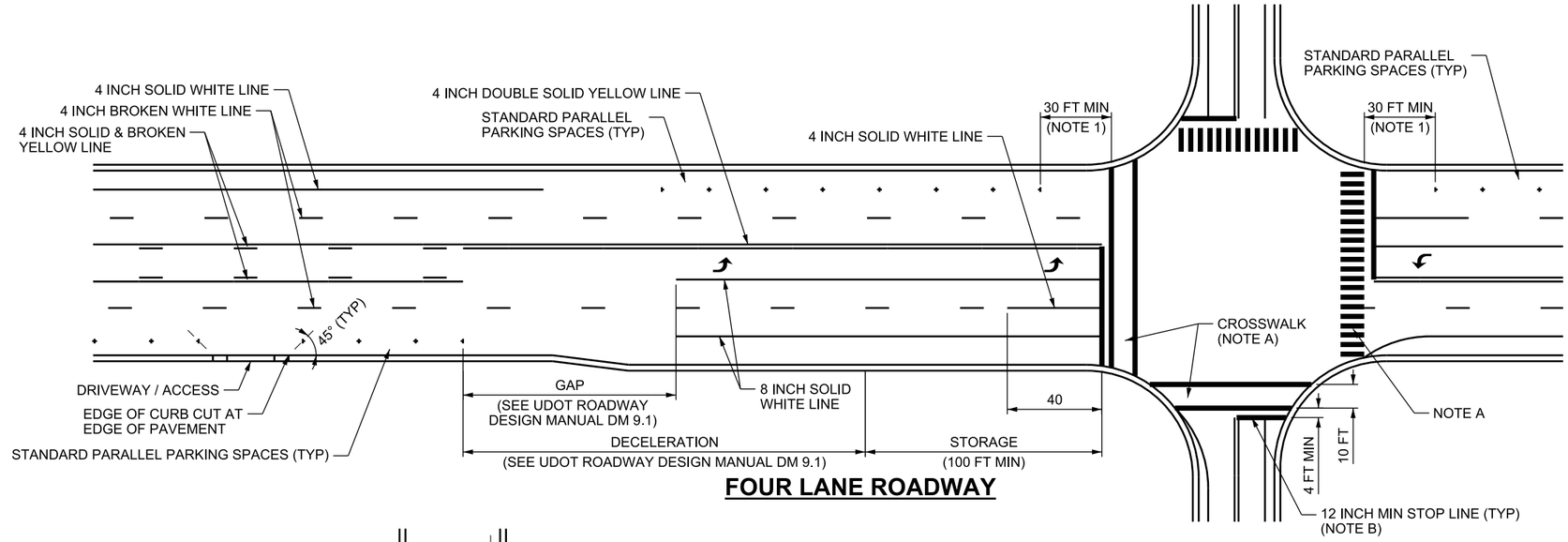


## FOUR LANE ROADWAY

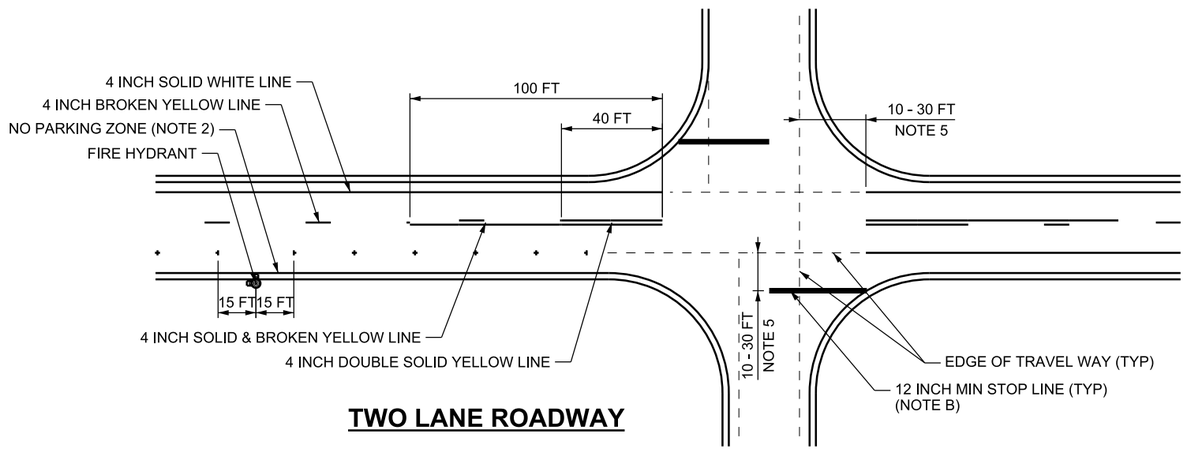


## TWO LANE ROADWAY

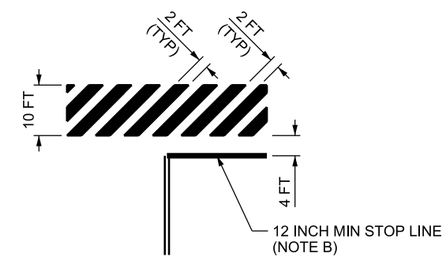


## SPECIAL EMPHASIS CROSSWALK

SOLID WHITE DIAGONAL LINES AT 45°
TO DIRECTION OF TRAVEL (NOTE A)

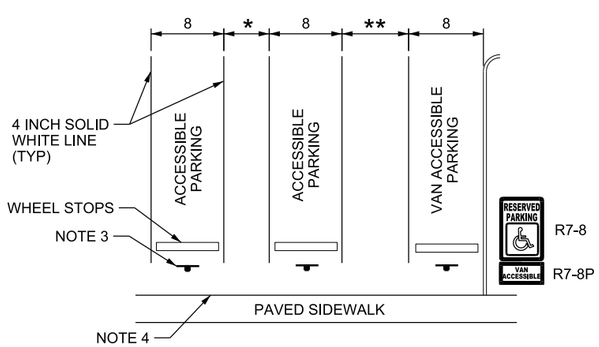


## PARKING LOT STRIPING FOR RESERVED ACCESSIBLE PARKING

* 5 FT MIN FOR ACCESSIBLE PARKING
** 8 FT MIN FOR VAN ACCESSIBLE PARKING.
PROVIDE ONE VAN ACCESSIBLE STALL FOR
EVERY EIGHT ACCESSIBLE STALLS.

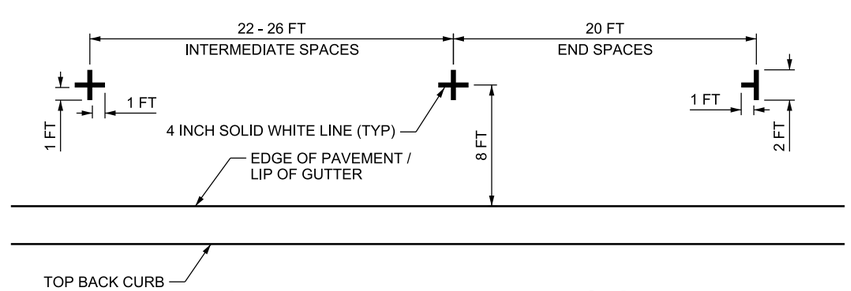


## STANDARD PARALLEL PARKING

**DESIGN-ONLY NOTES:**

A. THE REGION TRAFFIC ENGINEER DETERMINES THE LOCATION AND TYPE OF CROSSWALKS AT AN INTERSECTION.

B. USE A 24 INCH STOP LINE WHERE:
- A SCHOOL CROSSWALK IS PLACED
- AT SIGNALIZED INTERSECTION WHERE NO CROSSWALK IS PRESENT
- AT THE DISCRETION OF THE REGION TRAFFIC ENGINEER

**NOTES:**

1. ESTABLISH A "NO PARKING" ZONE 30 FT PRIOR TO FLASHING SIGNAL, STOP SIGN, YIELD SIGN, OR SIGNAL.
2. RED CURB MARKING IS OPTIONAL FOR "NO PARKING" ZONE.
3. PROVIDE RESERVED PARKING SIGNING (R7-8) FOR ACCESSIBLE PARKING SPACES. INCLUDE VAN ACCESSIBLE PLAQUE (R7-8P) FOR VAN PARKING SPACES.
4. BLEND ACCESS AISLE WITH PAVED SIDEWALK OR PEDESTRIAN RAMP FOR SMOOTH ELEVATION TRANSITION.
5. PLACE STOP LINE 10-30 FT AWAY FROM THE EDGE OF TRAVEL WAY OF THE CROSS TRAFFIC TO ACCOMMODATE TURNING VEHICLES AND PROVIDE PROPER INTERSECTION SIGHT DISTANCE.

SUPPLEMENTAL DRAWING

| NO. | DATE | APPR. | REMARKS |
|---|---|---|---|
| | | | |

REVISIONS

**UTAH DEPARTMENT OF TRANSPORTATION**
STANDARD DRAWINGS FOR ROAD AND BRIDGE CONSTRUCTION
SALT LAKE CITY, UTAH

RECOMMENDED FOR APPROVAL — AUG 30, 2018 DATE
CHAIRMAN STANDARDS COMMITTEE APPROVED — AUG 30, 2018 DATE
DEPUTY DIRECTOR

CROSSWALKS, PARKING, AND INTERSECTION APPROACHES
STANDARD DRAWING TITLE

STD. DWG. NO.
ST 7

DGN File: Q:\Standardsand\Specs\Section\2017Section\All Supp Issues\Issue * 6 08-30-2018\Drawings\ST07.dgn
12-SEP-2018

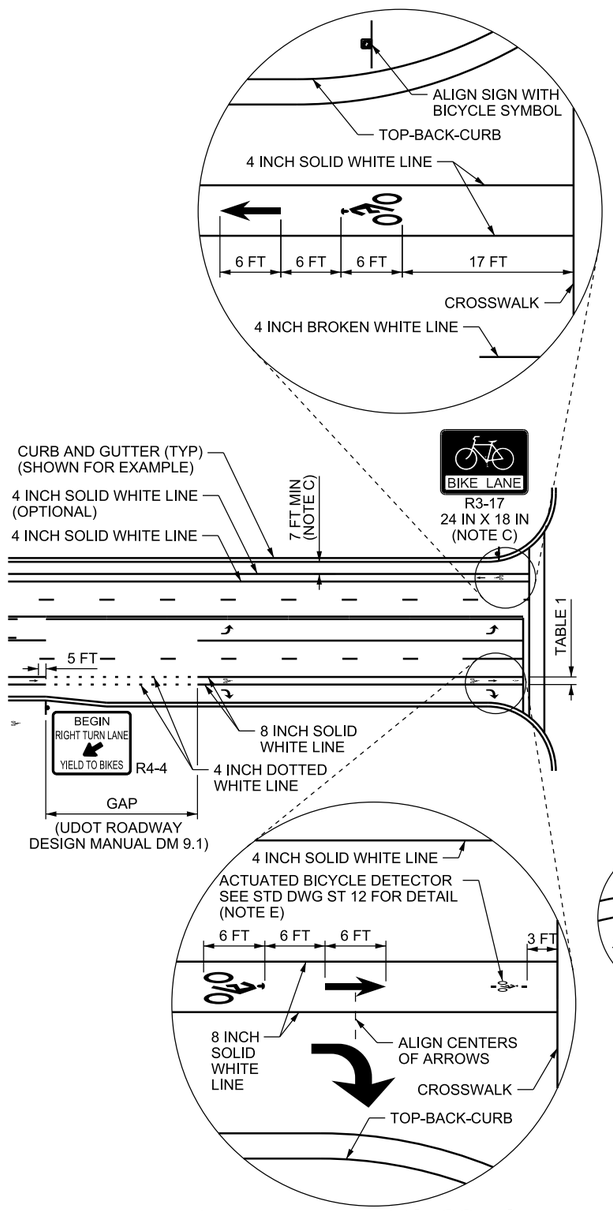


## PAVEMENT MARKINGS WITH ACTUATED BICYCLE DETECTOR

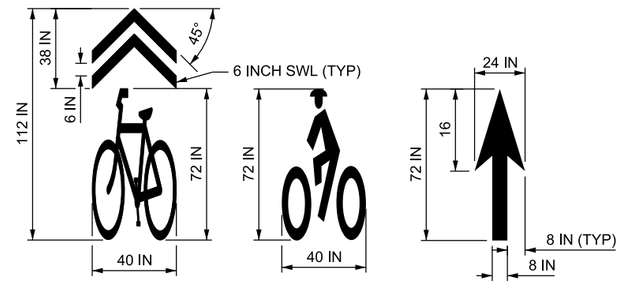


## BICYCLE PAVEMENT MESSAGE DETAILS

NOTE D

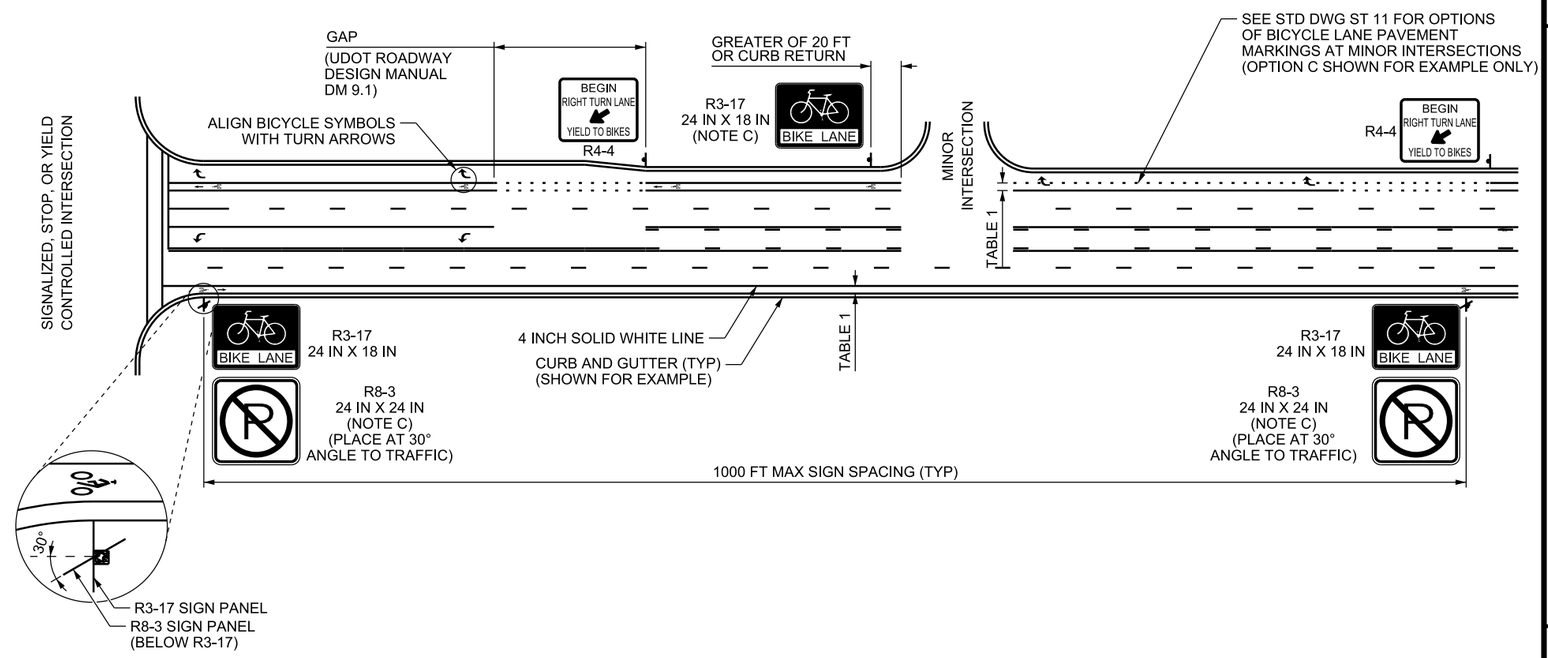


| TABLE 1 - BICYCLE LANE WIDTH | | |
|---|---|---|
| DESIGN SPEED OR | < 45 MPH | ≥ 50 MPH |
| VOLUME | < 6,000 ADT | ≥ 6,000 ADT |
| ON STREET PARKING | 5-7 FT | 5-7 FT |
| NO ON STREET PARKING | 4-5 FT | |
| VERTICAL SURFACE* | 5-7 FT | |
| NO VERTICAL SURFACE* | 4-5 FT | |

*VERTICAL SURFACE IS ANY CONTINUOUS OR REPEATED VERTICAL OR NEAR VERTICAL ELEMENT GREATER THAN 18 INCHES IN HEIGHT, INCLUDING BUT NOT LIMITED TO: BARRIER, GUARDRAIL, WALLS, AND PARKED VEHICLES.

**DESIGN NOTES:**

A. USE THE UTAH MANUAL ON UNIFORM TRAFFIC CONTROL DEVICES (MUTCD), THE AASHTO A POLICY ON GEOMETRIC DESIGN OF HIGHWAYS AND STREETS, AND THE AASHTO GUIDE FOR THE DEVELOPMENT OF BICYCLE FACILITIES FOR DESIGN OF ELEMENTS NOT SHOWN ON THIS STANDARD DRAWING.

B. SEE STD DWG ST 1 FOR LINE DIMENSIONS.

C. USE NO PARKING SIGN, R8-3 WHEN SHOULDER WIDTH IS LESS THAN 7 FT.

D. REFER TO THE STANDARD HIGHWAY SIGNS MANUAL FOR ADDITIONAL PAVEMENT MESSAGE DIMENSIONING AND DETAILS.

E. INSTALL BICYCLE DETECTOR PAVEMENT MARKINGS ONLY ON ACTUATED APPROACHES WHERE DETECTION IS THE ONLY MECHANISM USED TO CALL THE SIGNAL PHASE (WHERE IT IS NECESSARY FOR THE CYCLISTS TO STOP AND WAIT IN CERTAIN LOCATIONS TO ACTIVATE THE TRAFFIC SIGNAL). CONTACT THE REGION SIGNAL ENGINEER FOR SPECIFICS ON WHICH DETECTORS ARE USED TO CALL THE PHASES.

SUPPLEMENTAL DRAWING

REVISIONS

| NO. | DATE | APPR. | REMARKS |
|---|---|---|---|
| | | | |

UTAH DEPARTMENT OF TRANSPORTATION
STANDARD DRAWINGS FOR ROAD AND BRIDGE CONSTRUCTION
SALT LAKE CITY, UTAH

RECOMMENDED FOR APPROVAL — AUG 30, 2018 DATE
CHAIRMAN STANDARDS COMMITTEE — AUG 30, 2018 DATE
APPROVED — DEPUTY DIRECTOR

BICYCLE LANE PAVEMENT MARKINGS (SHEET 1 OF 2)

STANDARD DRAWING TITLE

STD. DWG. NO.
ST 10

12-SEP-2018 D:\Standards\SpecSection\2017Section\All Supp Issues\Issue # 6 08-30-2018\Drawings\ST10.dgn

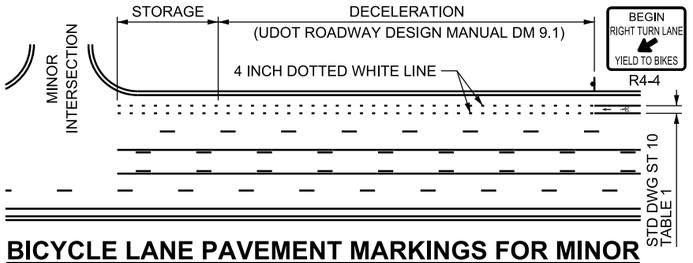


## BICYCLE LANE PAVEMENT MARKINGS FOR MINOR INTERSECTIONS AND BUS STOPS - OPTION A

MINIMUM RIGHT TURN VOLUME OF 10 VPH

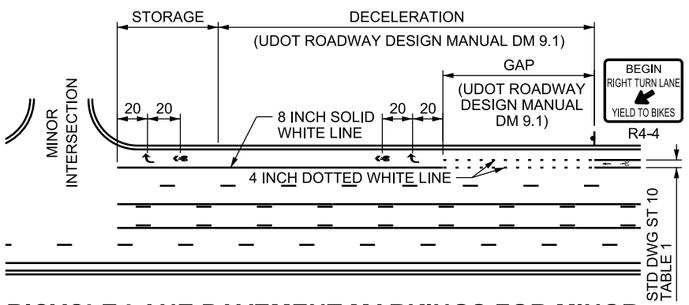


## BICYCLE LANE PAVEMENT MARKINGS FOR MINOR INTERSECTIONS AND BUS STOPS - OPTION B

MINIMUM RIGHT TURN VOLUME OF 10 VPH

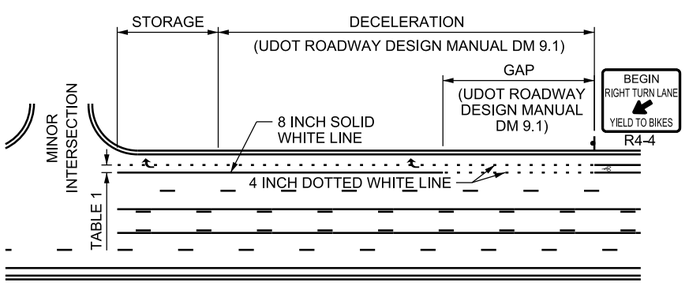


## BICYCLE LANE PAVEMENT MARKINGS FOR MINOR INTERSECTIONS - OPTION C

MINIMUM RIGHT TURN VOLUME OF 10 VPH

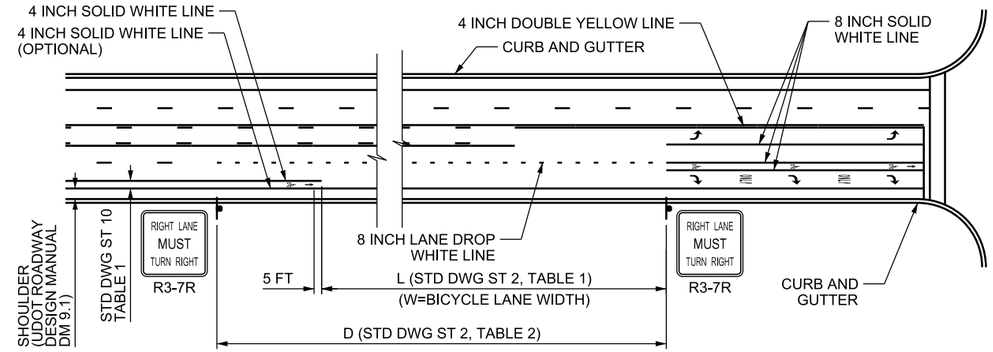


## BICYCLE LANE WITH A MANDATORY RIGHT TURN LANE

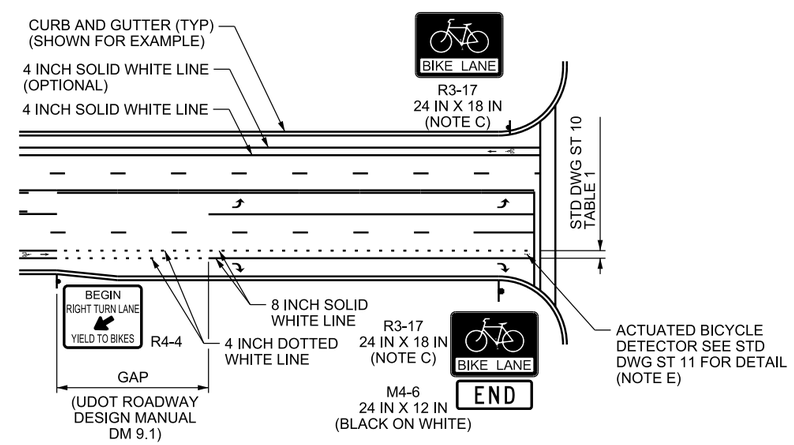


## BICYCLE MARKINGS WHEN BICYCLE LANE ENDS AT INTERSECTION

**DESIGN NOTES:**

A. USE THE UTAH MANUAL ON UNIFORM TRAFFIC CONTROL DEVICES (MUTCD), THE AASHTO A POLICY ON GEOMETRIC DESIGN OF HIGHWAYS AND STREETS, AND THE AASHTO GUIDE FOR THE DEVELOPMENT OF BICYCLE FACILITIES FOR DESIGN OF ELEMENTS NOT SHOWN ON THIS STANDARD DRAWING.

B. SEE STD DWG ST 1 FOR LINE DIMENSIONS.

C. USE NO PARKING SIGN, R8-3 WHEN SHOULDER WIDTH IS LESS THAN 7 FT.

D. USE CORRIDOR-SIMILAR DESIGN WHEN SELECTING PAVEMENT MARKINGS FOR RIGHT\ TURNS AT MINOR INTERSECTIONS (OPTIONS A, B, OR C).

E. INSTALL BICYCLE DETECTOR PAVEMENT MARKINGS ONLY ON ACTUATED APPROACHES WHERE DETECTION IS THE ONLY MECHANISM USED TO CALL THE SIGNAL PHASE (WHERE IT IS NECESSARY FOR THE CYCLISTS TO STOP AND WAIT IN CERTAIN LOCATIONS TO ACTIVATE THE TRAFFIC SIGNAL). CONTACT THE REGION SIGNAL ENGINEER FOR SPECIFICS ON WHICH DETECTORS ARE USED TO CALL THE PHASES.

SUPPLEMENTAL DRAWING

REVISIONS

| NO. | DATE | APPR. | REMARKS |
|---|---|---|---|
| | | | |

UTAH DEPARTMENT OF TRANSPORTATION
STANDARD DRAWINGS FOR ROAD AND BRIDGE CONSTRUCTION
SALT LAKE CITY, UTAH

RECOMMENDED FOR APPROVAL — AUG 30, 2018 DATE
CHAIRMAN STANDARDS COMMITTEE — AUG 30, 2018 DATE
APPROVED
DEPUTY DIRECTOR

BICYCLE LANE PAVEMENT MARKINGS (SHEET 2 OF 2)

STANDARD DRAWING TITLE

STD. DWG. NO.

ST 11

DGN File: D:\StandardsandSpecsSection\2017Section\All Sup Issues\Issue # 6 08-30-2018\Drawings\ST11.dgn
12-SEP-2018

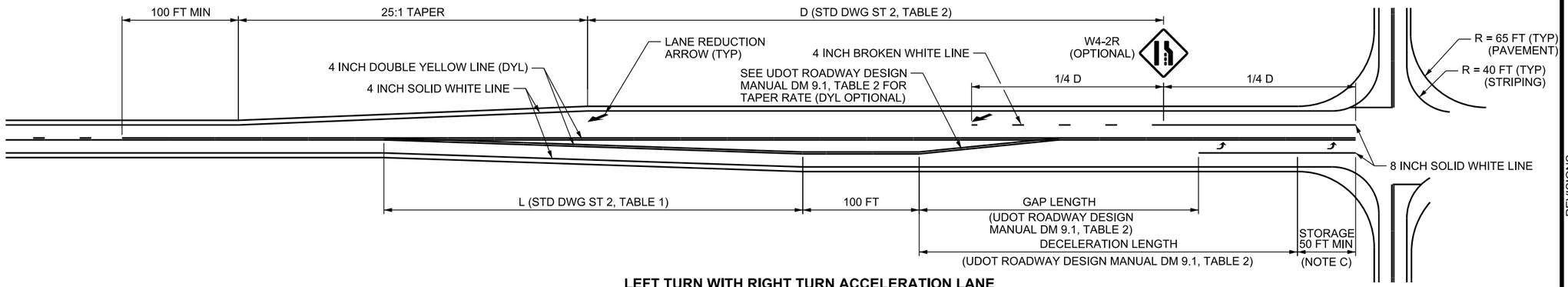


**LEFT TURN WITH RIGHT TURN ACCELERATION LANE**

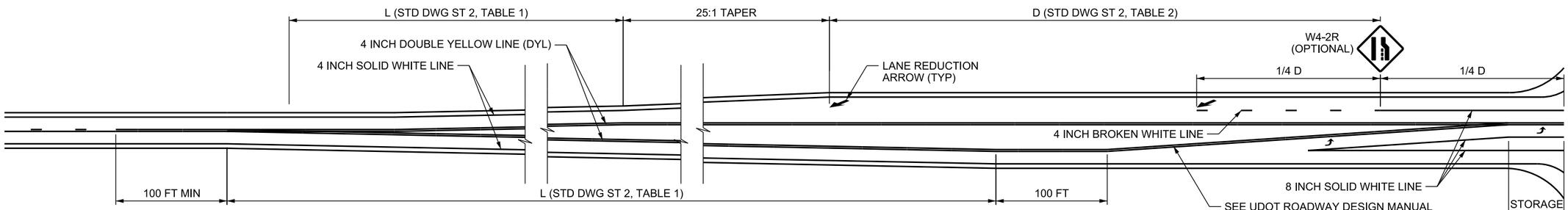


**LEFT TURN WITH RIGHT TURN ACCELERATION LANE (OPPOSES MEDIAN ACCELERATION LANE)**

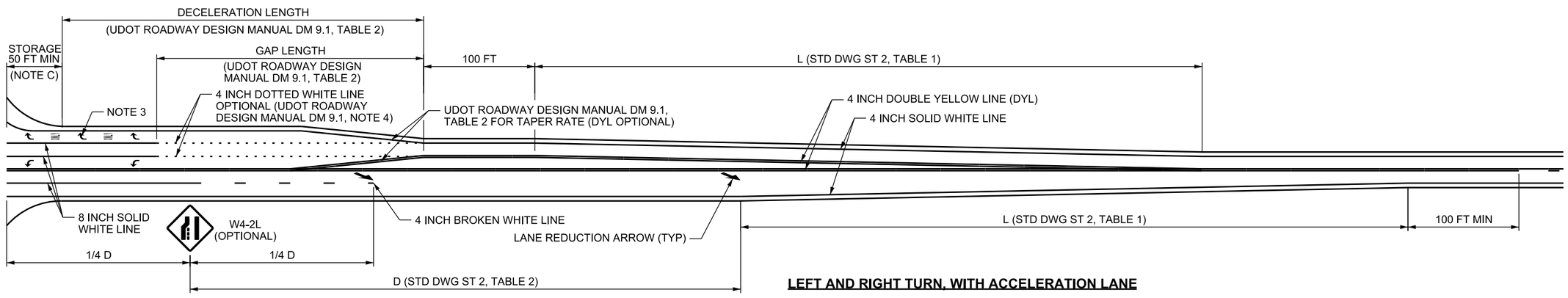


**LEFT AND RIGHT TURN, WITH ACCELERATION LANE**

| TABLE 1 | | | | |
|---|---|---|---|---|
| MINIMUM LEVELS FOR INSTALLATION OF TURN AND ACCELERATION LANES ON TWO LANE ROADS | | | | |
| SPEED | LEFT TURN LANE | RIGHT TURN LANE | LEFT TURN ACCELERATION LANE | RIGHT TURN ACCELERATION LANE |
| 40 MPH AND LESS | 25 VPH | 50 VPH | * | * |
| 45 TO 55 MPH | 10 VPH | 25 VPH | * | 50 VPH |
| 60 MPH AND GREATER | 5 VPH | 10 VPH | ** | 25 VPH |

* OPTIONAL FOR 50 MPH AND LESS. FOR 55 MPH, AS REQUIRED BY THE REGION TRAFFIC ENGINEER.
** AS REQUIRED BY THE REGION TRAFFIC ENGINEER.
VPH= VEHICLES PER HOUR IN ANY ONE HOUR PERIOD IN PASSENGER CAR EQUIVALENTS.

**DESIGN NOTES:**

A. USE THE AASHTO A POLICY ON GEOMETRIC DESIGN OF HIGHWAYS AND STREETS AND THE UTAH MANUAL ON UNIFORM TRAFFIC CONTROL DEVICES (MUTCD) FOR DESIGN OF ROADWAY ELEMENTS NOT SHOWN.

B. CONFIGURATIONS SHOWN MAY VARY BASED ON LOCATION OF WIDENING (EQUAL WIDENING TO BOTH SIDES AS OPPOSED TO ONE SIDE OF THE EXISTING ROAD OR ANOTHER, FOR EXAMPLE).

C. INCREASE VEHICLE STORAGE LENGTH AS DETERMINED BY ENGINEERING STUDY OR REGION TRAFFIC ENGINEER.

D. DESIGN ALL EDGES OF PAVEMENT AND STOP LINE / RAISED MEDIAN OFFSETS FOR DESIGN VEHICLE (WB-67, UNLESS APPROVED BY REGION TRAFFIC ENGINEER). DESIGN STRIPING FOR STANDARD (P) DESIGN VEHICLES.

**NOTES:**

1. MATCH THE EXISTING OUTSIDE SHOULDER WIDTH (4 FT MIN) FOR ACCELERATION AND DECELERATION LANES (INCLUDING TAPERS). USE TABLE 1 ON UDOT ROADWAY DESIGN MANUAL DM 9.1 FOR ALL OTHER SHOULDER WIDTHS.
2. PROVIDE A TWO-WAY LEFT TURN LANE CONNECTING ADJACENT ACCESS POINTS WHEN THEIR TAPERS OVERLAP, OR AS DIRECTED BY THE REGION TRAFFIC ENGINEER.
3. PLACE RIGHT TURN ARROWS AND "ONLY" MARKINGS WHEN AN OPPOSING RIGHT TURN ACCELERATION OR A MANDATORY LANE DROP IS USED. SEE STD DWG ST 6 FOR PAVEMENT MESSAGE PLACEMENT.

SUPPLEMENTAL DRAWING

REVISIONS

| NO. | DATE | APPR. | REMARKS |
|---|---|---|---|
| | | | |

**UTAH DEPARTMENT OF TRANSPORTATION**
STANDARD DRAWINGS FOR ROAD AND BRIDGE CONSTRUCTION
SALT LAKE CITY, UTAH

RECOMMENDED FOR APPROVAL — AUG 30, 2018 DATE
CHAIRMAN STANDARDS COMMITTEE APPROVED — AUG 30, 2018 DATE
DEPUTY DIRECTOR

STANDARD DRAWING TITLE
TWO-LANE INTERSECTION PAVEMENT MARKINGS (SHEET 1 OF 2)

STD. DWG. NO.
ST 13

DGN File:Q:\Standardsand\Specs\Section\2017Section\All Supp Issues\Issue # 6 08-30-2018\Drawings\ST13.dgn
12-SEP-2018

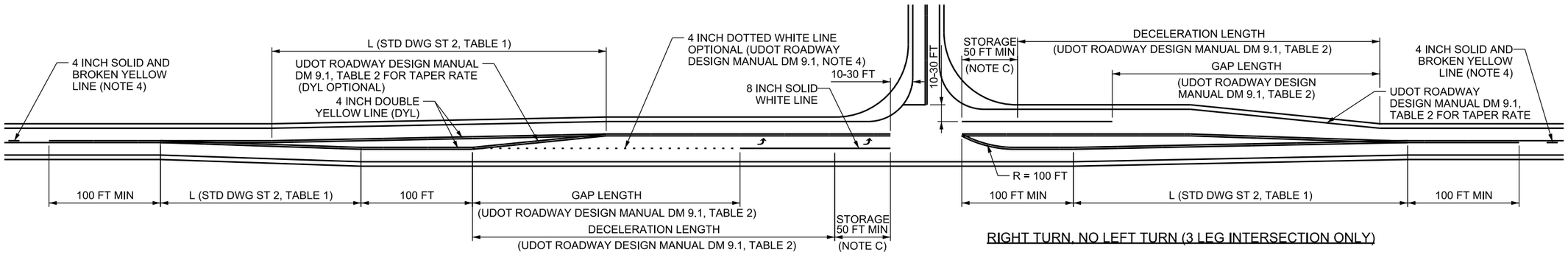


LEFT TURN

RIGHT TURN, NO LEFT TURN (3 LEG INTERSECTION ONLY)

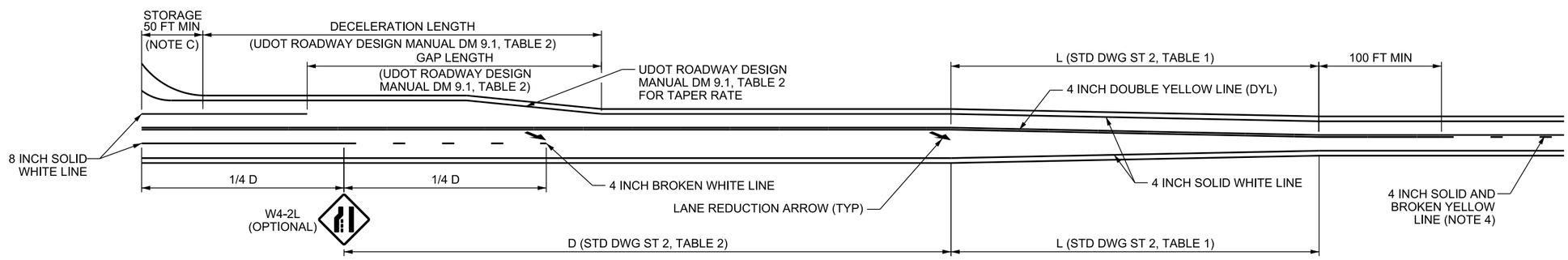


RIGHT TURN, NO LEFT TURN, WITH MEDIAN ACCELERATION LANE

| TABLE 1 | | | | |
|---|---|---|---|---|
| MINIMUM LEVELS FOR INSTALLATION OF TURN AND ACCELERATION LANES ON TWO LANE ROADS | | | | |
| SPEED | LEFT TURN LANE | RIGHT TURN LANE | LEFT TURN ACCELERATION LANE | RIGHT TURN ACCELERATION LANE |
| 40 MPH AND LESS | 25 VPH | 50 VPH | * | * |
| 45 TO 55 MPH | 10 VPH | 25 VPH | * | 50 VPH |
| 60 MPH AND GREATER | 5 VPH | 10 VPH | ** | 25 VPH |

* OPTIONAL FOR 50 MPH AND LESS. FOR 55 MPH, AS REQUIRED BY THE REGION TRAFFIC ENGINEER.
** AS REQUIRED BY THE REGION TRAFFIC ENGINEER.
VPH= VEHICLES PER HOUR IN ANY ONE HOUR PERIOD IN PASSENGER CAR EQUIVALENTS.

**DESIGN NOTES:**

A. USE THE AASHTO A POLICY ON GEOMETRIC DESIGN OF HIGHWAYS AND STREETS AND THE UTAH MANUAL ON UNIFORM TRAFFIC CONTROL DEVICES (MUTCD) FOR DESIGN OF ROADWAY ELEMENTS NOT SHOWN.

B. CONFIGURATIONS SHOWN MAY VARY BASED ON LOCATION OF WIDENING (EQUAL WIDENING TO BOTH SIDES AS OPPOSED TO ONE SIDE OF THE EXISTING ROAD OR ANOTHER, FOR EXAMPLE).

C. INCREASE VEHICLE STORAGE LENGTH AS DETERMINED BY ENGINEERING STUDY OR REGION TRAFFIC ENGINEER.

D. DESIGN ALL EDGES OF PAVEMENT AND STOP LINE / RAISED MEDIAN OFFSETS FOR DESIGN VEHICLE (WB-67, UNLESS APPROVED BY REGION TRAFFIC ENGINEER). DESIGN STRIPING FOR STANDARD (P) DESIGN VEHICLES.

**NOTES:**

1. MATCH THE EXISTING OUTSIDE SHOULDER WIDTH (4 FT MIN) FOR ACCELERATION AND DECELERATION LANES (INCLUDING TAPERS). USE TABLE 1 ON UDOT ROADWAY DESIGN MANUAL DM 9.1 FOR ALL OTHER SHOULDER WIDTHS.
2. PROVIDE A TWO-WAY LEFT TURN LANE CONNECTING ADJACENT ACCESS POINTS WHEN THEIR TAPERS OVERLAP, OR AS DIRECTED BY THE REGION TRAFFIC ENGINEER.
3. PLACE RIGHT TURN ARROWS AND "ONLY" MARKINGS WHEN AN OPPOSING RIGHT TURN ACCELERATION OR A MANDATORY LANE DROP IS USED. SEE STD DWG ST 6 FOR PAVEMENT MESSAGE PLACEMENT.
4. PLACE PASSING ZONE STRIPING PER STD DWG ST 1 AND ST 2.

SUPPLEMENTAL DRAWING

REVISIONS

| NO. | DATE | APPR. | REMARKS |
|---|---|---|---|
| | | | |

UTAH DEPARTMENT OF TRANSPORTATION
STANDARD DRAWINGS FOR ROAD AND BRIDGE CONSTRUCTION
SALT LAKE CITY, UTAH

RECOMMENDED FOR APPROVAL — AUG 30, 2018 DATE
CHAIRMAN STANDARDS COMMITTEE APPROVED — AUG 30, 2018 DATE
DEPUTY DIRECTOR

STANDARD DRAWING TITLE
TWO-LANE INTERSECTION PAVEMENT MARKINGS (SHEET 2 OF 2)

STD. DWG. NO.
ST 14

DGN File:Q:\StandardsandSpecsSection\2017Section\All Supp Issues\Issue # 6 08-30-2018\Drawings\ST14.dgn
12-SEP-2018

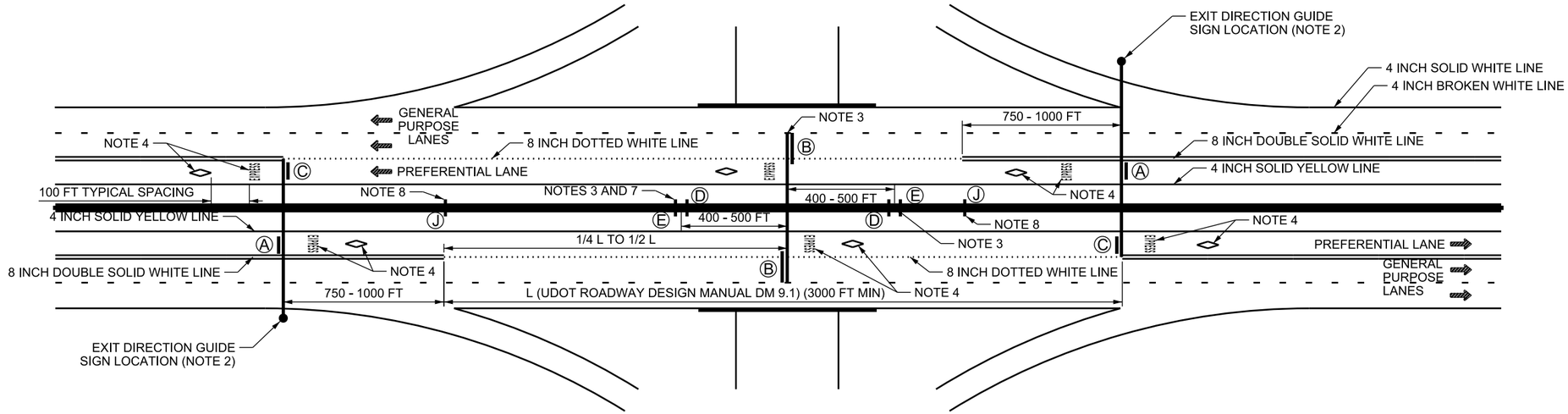


## PREFERENTIAL LANE ACCESS OPENING DETAILS

**LEGEND**

- BARRIER OR POST MOUNTED SIGN
- OVERHEAD MOUNTED SIGN
- Ⓐ SIGN IDENTIFICATION CODE (SEE STD DWG ST 15)
- HOV SYMBOL PAVEMENT MARKING
- EXPRESS — EXPRESS LANE PAVEMENT MARKING
- DIRECTION OF TRAFFIC

**NOTES:**

1. SEE STD DWG ST 15 FOR SIGN AND PAVEMENT MARKING DETAILS.
2. ALIGN EXPRESS ELECTRONIC TOLL (RS3-48b) SIGN WITH EXIT DIRECTION GUIDE SIGN WHERE POSSIBLE. EXIT DIRECTION SIGN MUST BE LOCATED AT THE THEORETICAL GORE OR AT THE POINT OF RAMP WIDENING, DEPENDING ON EXIT RAMP CONFIGURATION.
3. ALIGN PREFERENTIAL LANE ACCESS POINTS FOR OPPOSING DIRECTIONS WHEN POSSIBLE SUCH THAT THE SIGN SUPPORTS CAN BE USED IN COMMON.
4. PLACE EXPRESS PAVEMENT MARKING AND HOV LANE SYMBOL PAVEMENT MARKING BEFORE EGRESS, ONCE IN THE ACCESS OPENING, AFTER THE ENTRANCE, AND EVERY 1/4 MILE IN THE PREFERENTIAL LANE.
5. PLACE THE HOV LANE SYMBOL PAVEMENT MARKING 100 FT AFTER THE EXPRESS PAVEMENT MARKING (TYPICAL).
6. PLACE BARRIER MOUNTED SIGNS BACK TO BACK WHERE APPLICABLE. PLACE SIGNS PERPENDICULAR TO TRAFFIC UNLESS THE SIGN IS WIDER THAN 4 FT. SKEW SIGNS WIDER THAN 4 FT UP TO 45 DEGREES SO THE SIGN DOES NOT PROJECT MORE THAN 1 FT BEYOND THE OUTER EDGE OF THE BARRIER.
7. PLACE SIGN IDENTIFICATION CODE SIGNS D AND E BACK-TO-BACK WHERE POSSIBLE.
8. PLACE THE EXPRESS EGRESS DIRECTION (ES8-5) SIGN OPPOSITE THE END OF THE DOUBLE SOLID WHITE LINE, AT THE BEGINNING OF THE ACCESS OPENING.
9. USE A PREFERENTIAL LANE WIDTH OF 11 FT MINIMUM. USE A SEPARATION WIDTH OF 4 FT BETWEEN THE PREFERENTIAL LANE AND GENERAL PURPOSE LANE ONE (SEE STD DWG ST 15, STRIPING DETAILS). USE A GENERAL PURPOSE LANE ONE WIDTH OF 11 FT MINIMUM. USE A LANE WIDTH OF 12 FT FOR ALL OTHER LANES, INCLUDING AUXILIARY LANES (UNLESS OTHERWISE APPROVED BY REGION TRAFFIC ENGINEER).
10. SEE STD DWG ST 1 FOR PAVEMENT MARKING LINE DIMENSIONS.

SUPPLEMENTAL DRAWING

REVISIONS

| NO. | DATE | APPR. | REMARKS |
|---|---|---|---|
| | | | |

**UTAH DEPARTMENT OF TRANSPORTATION**
STANDARD DRAWINGS FOR ROAD AND BRIDGE CONSTRUCTION
SALT LAKE CITY, UTAH

RECOMMENDED FOR APPROVAL — AUG 30, 2018 DATE
CHAIRMAN STANDARDS COMMITTEE APPROVED — AUG 30, 2018 DATE
DEPUTY DIRECTOR

PREFERENTIAL LANE ACCESS OPENING DETAILS
STANDARD DRAWING TITLE

STD. DWG. NO.
ST 16

12-SEP-2018 DGN File:D:\StandardsandSpecsSection\2017Section\All Supp Issues\Issue # 6 08-30-2018\Drawings\ST16.dgn

# Supplemental Issue, October 25, 2018

## Supplemental Specifications

| | |
|---|---|
| 00570M | Definitions |
| 00777M | Change Management |
| 02221M | Remove Structure and Obstruction |
| 02373M | Riprap |
| 02610M | Drainage Pipe |
| 02825 | Cattle Guard |
| 03056M | Self-Consolidating Concrete (SCC) |
| 03152M | Concrete Joint Control |
| 13557M | Variable Message Sign |

## Supplemental Drawings

| | |
|---|---|
| AT 04 | Loop Detector and Wiring Details |
| AT 09 | ATMS Cabinet Disconnect and Transformer Frame |
| SW 1A | Precast Concrete Cattle Guard-General |
| SW 1B | 8’-0” Precast Concrete Cattle Guard End Unit |
| SW 1C | 8’-0” Precast Concrete Cattle Guard Center Unit |
| SW 1D | 6’-0” Precast Concrete Cattle Guard End Unit **(NEW DRAWING)** |
| SW 1E | 6’-0” Precast Concrete Cattle Guard Center Unit **(NEW DRAWING)** |
| SW 1F | Welded End Guard Unit and Traffic Grill Unit **(NEW DRAWING)** |
| SW 1G | Precast Concrete Cattle Guard – Optional CIP Apron **(NEW DRAWING)** |

**Supplemental Specification**
**2017 Standard Specification Book**

**SECTION 00570M**

# DEFINITIONS

**Delete Article 1.7, Paragraph A 29 and replace with the following:**

29. **Delay** – An event, action, force, or factor causing work to extend beyond the specified contract time.

**Delete Article 1.7, Paragraph A 73 through 97 and replace with the following:**

73. **Stop Work Order** – Notification to cease or hold work on a contract when the Engineer determines that work being performed is not in compliance with the contract or is being performed in an unsafe manner.
74. **Structures** – Buildings, bridges, box culverts, catch basins, cribbings, drop inlets, headwalls, manholes, overhead sign supports, retaining walls, and other similar features.
75. **Subgrade** – The top surface of a roadbed upon which the pavement structure, shoulders, and curbs are constructed.
76. **Subgrade Treatment** – Stabilization of roadbed material.
77. **Subcontractor** – An individual or legal entity to which a Contractor sublets part of the work.
78. **Substantial Completion** – Substantially complete. The day as determined by the Engineer when all of the following have occurred:
    a. The public, (including vehicles and pedestrians), have full and unrestricted use and benefit of the facilities both from the operational and safety standpoint.
    b. Successful completion of the LFOT, successful integration of devices to the Traffic Operations Center and active central communications to all devices.
    c. All safety features are installed and fully functional, including, but not limited to, illumination, signing, pavement markings, all coats of striping paint, barrier, guardrail, impact attenuators, delineators, and all other safety appurtenances.
    d. All remaining pay items in the contract are complete in addition to safety features. Only minor corrective work and replacement of temporary substitute facilities remains for physical completion.

e. The Contractor and Engineer mutually agree that all work remaining will be performed without lane closures, trail or sidewalk closures, and further delays, disruption, or impediment to the public.

79. **Substructure** – The system of bridge elements that support the superstructure. The substructure transfers the loads to the earth and retains material behind the supports. Substructure elements include abutments, bents, footings, piles, wingwalls, backwalls, etc.
80. **Superintendent** – The Contractor's authorized employee in responsible charge of work.
81. **Superstructure** – The system of bridge elements that spans the feature being crossed. The superstructure rests on the substructure. The superstructure includes the deck, parapets and girders, or other support elements (for example, trusses, arches, box girders).
82. **Surety** – The legal entity or individual, other than the Contractor, executing a bond furnished by the Contractor.
83. **Suspend Work –** Notification to cease or hold work on a contract when the Engineer determines that delaying the work would be beneficial to both the Contractor and the Department.
84. **Temporary Works** – Facilities that are generally designed by the Contractor and employed by the Contractor in the execution of the work and whose failure to perform properly could adversely affect the character of the contract work or endanger the safety of adjacent facilities, property, workers, or the public. Such facilities include but are not limited to falsework, forms and form travelers, cofferdams, shoring, water control systems, and temporary bridges.
85. **Time-Related Cost (time component)** – A bid item that identifies a daily value based on user costs or liquidated damages. Time value is the sum of the products of the time-related cost rates multiplied by the time bid by the Contractor to achieve the contract milestones.
86. **Traveled Way** – The portion of the roadway designated for the movement of vehicles, excluding shoulders and auxiliary lanes.
87. **Unbalanced Bid**
    a. **Mathematically Unbalanced** – A bid containing lump sum or unit bid items that do not include reasonable actual costs plus a reasonable proportionate share of the proposer's anticipated profit, overhead costs, and other indirect costs.
    b. **Materially Unbalanced** – A mathematically unbalanced bid that generates a reasonable doubt that awarding the contract to the proposer will result in the lowest ultimate cost to the Department.

88. **Unsuitable Material** - Material not meeting specifications, organic materials, materials that are soft, springy or otherwise yielding, frozen lumps, soils such as peat or bog, and over-saturated silts, clays, or sands whose water content prevents appropriate compaction.

89. **Unusually Severe Weather** – Adverse weather (such as unusually heavy rain or snow, or unusually high or low temperatures) which at the time of year in which it occurred is unusual for the project site, and is more severe than any that might be anticipated for the project location during the period of expected performance as compared to the averages as reported by the Prism Climate Group.

90. **User Costs** – Costs incurred, directly or indirectly, by the traveling public due to construction activities.

91. **Utility** – All privately, publicly, or cooperatively owned lines, facilities, and systems for producing, transmitting, or distributing communications, power, heat, gas, oil, water, waste, and storm water not connected with the highway drainage, signal systems, and other products that directly or indirectly serve the public.

92. **Value Engineering Change Proposal** – A change proposed by the Contractor and considered by the Department intended to result in project cost savings to contract pay items without reducing the essential functions and characteristics of the project. Refer to Section 00725.

93. **Well-Graded Material** – Material having an even distribution of different particle sizes. This even distribution of particles of different sizes results in a dense mass upon compaction.

94. **Work** – The elements, activities, and incidentals necessary to complete a project (including labor, materials, equipment, and the interim products and stages attained in the course of reaching completion), and all alterations, amendments, or extensions made by change order or other written orders of the Engineer.

95. **Working Day** – Any calendar day, except:
    a. Contract designated holidays or days restricted in the contract.
    b. Days when the Contractor is specifically required by the contract or letter from the Engineer to suspend operations through no fault of the Contractor.
    c. Days when the Engineer determines that inclement weather or adverse conditions interfere with the progress of the work.
        1) When the Engineer determines that inclement weather prevents the Contractor from working for at least 50 percent of the normal working day.

2) The day may be considered a working day exception even though conditions may improve and the major portion of the day could be considered suitable for operations if weather stops the Contractor's crew from beginning work at the normal starting hour and the crew is released as a result.

d. Submittals and notification requirements are based on a standard 5 day work week.

96. **Working Drawings** – Drawings produced by the Contractor that supplement the contract drawings to provide information not included in the contract documents but that is required to fabricate, erect, transport, or temporarily support the structure or structural elements in the completion of the work. Working drawings do not supersede the contract drawings.

97. **Written Permission of the Engineer** – A letter signed by the Engineer granting specific permission and outlining limitations of the permission.

**Supplemental Specification**
**2017 Standard Specification Book**

**SECTION 00777M**

# CHANGE MANAGEMENT

**Delete Article 1.4 and replace with the following:**

A. Burdened Wages - Includes wage plus payroll taxes, retirement benefits, health benefits, worker's compensation, life insurance, pensions and other fringe benefits.

B. Claim – A request for compensation, time adjustment or both for a disputed change that has been escalated to the Department's Region Director and remains unresolved.

C. Design Change – A revision to the contract issued by the Department directing the Contractor to proceed with new or revised work including an intended payment methodology for the new or revised work

D. Direct Cost - The costs of materials, labor, equipment and all directly involved efforts or expenses for the cost object.

E. Exception - A waiver of one or more contract requirements that may include instructions or interpretations
   1. Exceptions do not involve adjustment to the contract value or time duration.

F. Excusable Delay – A critical delay that is beyond the Contractor's control, not the fault or responsibility of the Contractor, or could not have been foreseen by the Contractor, for which a time extension will be granted.
   1. Compensable Delay – An excusable delay caused by the Department's action or inaction, or under the Department's control, including delays resulting from change orders, lack of site access, and delayed shop drawing approval. Differing site conditions and third-party utility work delays caused by conditions beyond the control of the Contractor will be a compensable delay.

2. Non-compensable Delay – Unforeseen and unanticipated excusable delay caused by force majeure or delays not the fault of the Contractor or Department.
    a) Concurrent Delay – A non-compensable delay that occurs when both the Contractor and the Department independently delay work on critical path activities during approximately the same time period.

G. Field Indirect Cost - All costs which are required for completion of the installation, but are not directly attributable to the cost object are considered indirect costs, such as overhead, field supervision and vehicles

H. Force Majeure **–** An unforeseeable event or circumstance that is beyond the control and without the fault or negligence of the Contractor. The Contractor by the exercise of reasonable diligence was unable to prevent, which by way of illustration can include, but is not limited to the following:
    1. Tornados, earthquakes, 50-year floods, fire or other physical natural disaster;
    2. Riot, war, invasion, act of foreign enemies, hostilities, acts of terrorism, civil war or rebellion.
    3. Any epidemic or quarantine restrictions occurring within the vicinity of the Project.
    4. A blockade or freight embargoes.
    5. Strikes or industrial disputes by labor not employed by the affected party, its subcontractors or its suppliers and which affect an essential portion of the works but excluding any industrial dispute which is specific to the performance of this agreement.

I. Non-excusable Delay – A delay that is within the Contractor's control, is the fault or responsibility of the Contractor, or can be reasonably foreseen by the Contractor and for which there is no monetary compensation or time extension.
    1. Examples of such delay-causing events are normal weather or the failure by the Contractor to assign sufficient resources to the work.

J. Potential Change Order (PCO) – A potential risk that may result in a request for equitable adjustment in cost or time if said risk is realized.

K. Request for Change Order (RCO) – A request by the Contractor to change the contract in response to unforeseeable conditions, design changes, and change directives.

L. Significant Change in the Character of Work - Work that differs materially in kind, quantity, or nature from that involved or included in the original contract.
   1. Alteration or change can be significant changes to the character of work or by their effect cause other work to become significantly different in character.

M. Value Engineering Change Proposal (VECP) - A proposed substitution of material or change to the work that may potentially result in cost or time savings and preserve essential functions and characteristics of the facility such as: service life, economy of operation, ease of maintenance, desired capacity, and safety.

**Delete Article 1.12 and replace with the following:**

## 1.12 EXCUSABLE DELAYS

A. This Article defines the process for determining the following:
   1. Contract time extensions for compensable and non-compensable delays.
   2. Associated delay costs for compensable delays.

B. The Department will grant additional time, or time and compensation for compensable delays.
   1. Time will be added to the contract based on a mutually agreed to schedule impact analysis showing lost time attributable to the delay-causing event

C. The Department will grant additional time for non-compensable delays.
   1. Time will be added to the contract based on a mutually agreed to schedule impact analysis showing time impacts attributable to the delay-causing event.
   2. The Department will not grant additional compensation for idled direct costs, field indirect costs, extended home overhead or loss of profit for non-compensable delays.

D. Provide written notification to the Engineer within ten calendar days of the occurrence of an event justifying the request for a time extension, as applicable.
   1. Take all reasonable steps to minimize the impact of the delay once a delay-causing event is identified. Failure to do so may result in the rejection of all or part of the delay claim.
   2. Delays incurred during the ten days prior to notification may be compensable or excusable.

3. Maintain daily records of labor, station locations, and equipment costs for operations affected.
    a. Obtain the Engineer's acceptance with these records on a daily basis.
4. Prepare and submit weekly written reports to the Engineer that contain:
    a. Number of delay days.
    b. Summary of all delayed operations, and operations that will be delayed, and the cause for delay.
    c. Itemize all extra costs incurred:
        1) Document how the extra costs relate to the delay and how they are calculated and measured.
        2) Identify all affected project employees for whom costs are being compiled.
        3) Use actual internal cost records kept in the usual course of business to justify added costs.
            a) Comply with generally accepted accounting principles.
5. Meet with the Engineer weekly to compare the previous week's daily records with those maintained by the Engineer.
    a. Resolve any disagreement over weekly delay costs with the Engineer.
    b. Provide written notice within ten calendar days documenting the disagreement between Department's calculations of weekly delay costs.
    c. Failure to provide notification is interpreted as acceptance that Department records are accurate.

E. Unusually Severe Weather
1. A delay due to unusually severe weather may be considered a non-compensable delay when the Contractor provides documentation that the weather conditions:
    a. Were unusually severe for the project site and the affected time period;
    b. Could not reasonably have been anticipated; and
    c. Had an adverse effect on the scheduled construction.
2. Demonstrate that the severity or the number of days of unusually severe weather at the project location warrants entitlement to a time extension.
    a. Establish that weather was unusually severe by comparing weather data (such as precipitation, temperature, or snowfall) for the affected time period with historical weather data for the same time period.

1) Refer to the Daily Values at the Prism Climate Group website to download historical temperature and precipitation values for the project location. Refer to http://www.udot.utah.gov/go/standardsreferences

3. Use historical weather data from at least the previous 5 years and no more than 10 years to:
   a. Demonstrate that the unusually severe weather experienced at the project site limited the ability to perform work.
   b. Demonstrate that the work was on the project's critical path and that the critical path was affected.
      1) Non-critical path work will not be considered a non-compensable delay for unusually severe weather.

F. Compensable Delay costs will be determined as follows:
   1. Direct Costs – Actual certified costs of the workforce and equipment idled by the delayed activity.
   2. Field Indirect Costs – Actual certified cost increases for job-site supervision and field office operating costs or other costs not directly associated with a particular work activity for the period of delay.
   3. Home Office Overhead – The markup allowed on all change orders includes the cost of home office overheads associated with that change in the project scope of work.
      a. Demonstrate the following to be entitled to alleged additional compensation for under-absorbed home office overhead costs:
         1) Under absorption actually occurred, meaning there was less revenue overall in relationship to home office costs and that no replacement work was obtained.
         2) The under absorption was a direct result of the project.
         3) Specific replacement work could have been reasonably obtained were it not for the alleged delay.
      b. Provide the following information supporting the claim for additional costs:
         1) The previous five years audited financial statements that include as a minimum the following information:
            a) Summaries of actual home office overhead costs.
            b) Total revenues generated annually sorted by each project worked on during the year.
            c) The amount of gain/loss earned for each active project during each year.

c. The amount will be calculated as shown below if additional payment for home office overheads is justified:

1) Unabsorbed home office overhead will not be reimbursed for the first ten calendar days of the delay-causing event.

2) Home office overhead costs will be calculated from the eleventh calendar day of the delay-causing event through the events end if the project is between 0 and 90 percent complete.

3) The following formula will be used to calculate home office overhead costs:

$$E = D\,[0.03(A)/C]$$

Where:

| | | |
|---|---|---|
| 0.03 | = | Allowed markup for home office overheads |
| A | = | Original contract value |
| C | = | Total contract duration in calendar days including approved time extensions |
| D | = | The agreed upon number of calendar days the project is delayed due to the delay-causing event minus ten |
| E | = | Total reimbursable amount for unabsorbed home office overhead |

4) Home office overhead will be reimbursed if the delay occurs after the project is 90 percent complete.

d. The Department does not compensate for the following:

1) Profit.
2) Loss of profit.
3) Labor inefficiencies.
4) Consequential damages, including but not limited to, loss of bonding capacity, loss of bidding opportunities, and insolvency.
5) Any indirect costs or expenses.
6) Attorney's fees, claims preparation expenses, or litigation costs.

4. The total reimbursable cost for a compensable delay is the sum of the daily agreed to costs for direct costs, field indirect costs, and unabsorbed home office overhead costs as computed according to this article for the duration of the delay.

a. No other costs will be reimbursed.

**Delete Article 1.13 A and replace with the following:**

A. This Article defines cost associated with changes due to differing site conditions, unforeseen condition or events (such as force majeure and foreign or domestic tariffs), and new work that may result in a request for additional compensation or time.

**Delete Article 1.13 F4 and replace with the following:**

4. A 15 percent markup will be paid on labor, material and equipment expenses.
   a. This markup compensates the Contractor for other direct expenses including bonds, small tools, home office overheads, profits, and incidental costs associated with the revised work.

**Supplemental Specification**
**2017 Standard Specification Book**

**SECTION 02221M**

# REMOVE STRUCTURE AND OBSTRUCTION

**Delete Article 3.21 and replace with the following:**

## 3.21 REMOVE CATTLE GUARD

A. Salvage existing traffic grill units and welded end guard units.
   1. Contact the Engineer for delivery location and coordination for salvaged traffic grill units and welded end guard units.

B. Cut existing pavement as required. Refer to Section 02705.

C. Remove existing fence as required.

D. Remove the cattle guard to at least 2 ft below the subgrade surface or finished ground lines.

E. Prevent livestock from entering work site from adjacent properties during removal and installation.

**Supplemental Specification**
**2017 Standard Specification Book**

**SECTION 02373M**

# RIPRAP

**Delete Article 2.2 and replace with the following**

## 2.2 EROSION CONTROL GEOTEXTILE

A. Refer to Section 02075, except use a nonwoven 12 oz/yd$^2$ minimum average roll value.

**Supplemental Specification**
**2017 Standard Specification Book**

**SECTION 02610M**

# DRAINAGE PIPE

**Delete Article 1.3, Paragraph I and J and replace with the following:**

I. AASHTO M 335: Steel-Reinforced Polyethylene (PE) Ribbed Pipe, 300- to 1500-mm (12- to 60-in.) Diameter

J. AASHTO R 82: Pipe Joint Selection for Highway Culvert and Storm Drains

**Delete Article 2.1, Paragraph A and Table 3 and replace with the following:**

A. General
   1. Provide pipe according to the size, material or interior roughness, and joint type specified.
      a. Meet the material requirements in Table 3.
      b. Meet the joint requirements of AASHTO R 82 for silt-tight and leak-resistant joints.
      c. Determine the strength and thickness of the pipe required based on the cover over the pipe. Refer to the DG Series Standard Drawings.
      d. Maintain the same type of pipe material, joint, strength, and thickness throughout the entire length of pipe.
   2. Internally label each section of pipe with the manufacturer's name or trademark, nominal diameter, and manufacture date. Include the pipe class, gauge, and coating according to the pipe material type.
      a. Place the pipe so that the location of the label is above the spring line of the pipe.

Table 3

| Pipe Material Specifications | |
|---|---|
| **Interior Roughness and Material Type** | |
| **Corrugated** | |
| Polymer Coated Corrugated Steel Pipe and Pipe Arch | AASHTO M 245 |
| Aluminum Corrugated Pipe and Pipe Arch | AASHTO M 196 |
| **Smooth** | |
| Profile Wall Polyethylene (HDPE) Pipe | AASHTO M 294 |
| Profile Wall Polyvinyl Chloride (PVC) pipe | AASHTO M 304 |
| Profile Wall Polypropylene Pipe | AASHTO M 330 |
| Steel Reinforced Thermoplastic Ribbed Pipe | AASHTO M 335 |
| Polymer Coated Spiral Rib Steel Pipe and Pipe Arch | AASHTO M 245 |
| Spiral Rib Aluminum Pipe and Pipe Arch | AASHTO M 196 |
| Reinforced Concrete Pipe | AASHTO M 170 |
| Elliptical Reinforced Concrete Pipe | AASHTO M 207 |

**Supplemental Specification**
**2017 Standard Specification Book**

**SECTION 02825**

# CATTLE GUARD

**Delete Section 02825 in its entirety and replace with the following:**

## PART 1 GENERAL

### 1.1 SECTION INCLUDES

A. Cattle Guard fabrication and installation.

B. Removal of existing cattle guard.

C. Cast-in-place concrete aprons.

### 1.2 RELATED SECTIONS

A. Section 02056: Embankment, Borrow, and Backfill

B. Section 02075: Geotextiles

C. Section 02221: Remove Structure and Obstruction

D. Section 02317: Structural Excavation and Backfill

E. Section 03055: Portland Cement Concrete

F. Section 03056: Self-Consolidating Concrete (SCC)

G. Section 03211: Reinforcing Steel and Welded Wire

H. Section 03390: Concrete Curing

I. Section 03575: Flowable Fill

J. Section 05120: Structural Steel

## 1.3 REFERENCES

A. AASHTO M 111: Zinc (Hot-Dip Galvanized) Coatings on Iron and Steel Products

B. AASHTO M 251: Plain and Laminated Elastomeric Bridge Bearings

C. AASHTO M 252: Corrugated Polyethylene Drainage Pipe

D. AWS D1.1 Structural Welding Code – Steel

E. Precast Concrete Institute (PCI) Design Handbook

F. Precast Concrete Institute (PCI) Tolerance Manual for Precast and Prestressed Concrete Construction, MNL-135.

G. UDOT Steel Construction Manual

## 1.4 DEFINITIONS **Not Used**

## 1.5 SUBMITTALS **Not Used**

# PART 2 PRODUCTS

## 2.1 GENERAL

A. Refer to SW Series Standard Drawings.

## 2.2 MATERIALS

A. Concrete
   1. Class AA(AE). Refer to Section 03055.
   2. Self-Consolidating Concrete – SCC. Refer to Section 03056.

B. Reinforcing Steel
   1. Use coated reinforcing steel. Refer to Section 03211.

C. Structural Steel
   1. Refer to Section 05120.
   2. Fabricator must have AISC Bridge Component Certification (CPT).

D. Lifting Devices
   1. Use lifting devices that can support the required vertical and horizontal forces with the applicable safety factors according to the Component Handling and Erection Bracing requirements in the PCI Design Handbook.
   2. Galvanize steel elements. Refer to AASHTO M111.

E. Flowable Fill
   1. Refer to Section 03575.

F. Drainage Geotextile
   1. Refer to Section 02075

G. Free Draining Granular Backfill
   1. Refer to Section 02056.

H. Corrugated Polyethylene Pipe
   1. Refer to AASHTO M 252.

I. Bearing Pad Strips
   1. Use 50 durometer hardness (Shore A), Grade 3 elastomer.
   2. Refer to AASHTO M 251.

## 2.3 TRAFFIC GRILL UNIT AND WELDED END GUARD UNIT FABRICATION

A. Fabricate according to the UDOT Steel Construction Manual and AWS D1.1

B. Hot-dip galvanize after fabrication. Refer to AASHTO M 111.

## 2.4 PRECAST CONCRETE CATTLE GUARD UNIT FABRICATION

A. Use a Department Certified Concrete Precaster.

B. Limit fabrication tolerance for length to: $+^{1}/_{8}$ inch to $-^{3}/_{8}$ inch or as indicated in the Certified Precaster's plant quality control manual, whichever is more stringent.
   1. Use the tolerances specified for Ribbed Wall Panel in the PCI Tolerance Manual, MNL-135, where no cattle guard specific tolerances are specified in the Certified Precaster's plant quality control manual.

C. Permanently mark each precast unit with date of casting, supplier identification, and identifiers to facilitate field placement.
   1. Stamp markings in fresh concrete.

D. Curing
   1. Refer to Section 03390.

E. Predrill holes for apron doweled bars when aprons are shown.
   1. Use template to mark drilling locations to prevent drill from damaging stud anchors.

## PART 3 EXECUTION

### 3.1 GENERAL

A. Structural excavation and backfill. Refer to Section 02317.

B. Reinstall removed fence as required.

### 3.2 SUBGRADE PREPARATION

A. Place flowable fill as shown.
   1. Allow flowable fill to become firm and unyielding before placing free draining granular backfill.

B. Place free draining granular backfill as shown
   1. Contour to distribute roadway grade break among adjacent joints between precast cattle guard units.
   2. Do not allow gap between precast cattle guard units at roadway surface to exceed ¾ inch.

### 3.3 CAST-IN-PLACE APRON PLACEMENT

A. Dowel and epoxy reinforcing steel as shown. Refer to Section 03211.

B. Place and finish concrete
   1. Dampen subgrade just before concrete placement
   2. Hand methods of strike-off and consolidation are permitted.
   3. Finish the surface smooth with a concrete finishing float.
      a. Do not add water to the surface of the concrete
      b. Remove form marks and irregularities.
   4. Round edges to a ½ inch radius.
   5. Brush exposed surfaces to a transverse broom finish.

C. Cure concrete. Refer to Section 03390.

END OF SECTION

**Supplemental Specification**
**2017 Standard Specification Book**

**SECTION 03056M**

# SELF-CONSOLIDATING CONCRETE (SCC)

**Delete Paragraph 1.3 I through M and replace with the following:**

I. ASTM C 1712: Rapid Assessment of Static Segregation Resistance of Self-Consolidating Concrete Using Penetration Test

J. American Concrete Institute (ACI) Standards

K. UDOT Materials Manual of Instruction

L. UDOT Minimum Sampling and Testing Requirements

M. UDOT Quality Management Plans

**Delete Paragraph 2.1 B through C and replace with the following:**

B. Slump Flow – 20 to 30 inches. Refer to AASHTO T 347.

C. Rapid Assessment of Static Segregation less than or equal to 15 mm. Refer to ASTM C 1712.

**Supplemental Specification**
**2017 Standard Specification Book**

**SECTION 03152M**

# CONCRETE JOINT CONTROL

**Delete Article 2.5 and Table 4 and replace with the following:**

## 2.5 JOINT SEALER (STRUCTURES)

A. Cold-applied, gun-grade, polyurethane base material that cures under field conditions to form a rubber-like, non-sag, elastomeric joint seal as specified in Federal Specifications TT-S-00230 C, Type II, Class A and ASTM C 920, Type S or M, Grade NS, Class 35 or higher, with at least the following Use: T, M, I.

B. Use material that bonds tightly to the sides of the concrete groove and exhibits the physical properties in Table 4 when cured and tested after 21 days at 73 degrees F.

Table 4

| **Physical Properties of Joint Sealer (Structures) and Test Methods** | | |
|---|---|---|
| **Description** | **Requirement** | **Test Method** |
| Modulus of Elasticity at 100 percent Elongation | 65 psi minimum | ASTM D 412 |
| Hardness (Shore A) | 30 minimum | ASTM C 661 |
| Elongation (at break) | 300 % minimum | ASTM D 412 |
| Tensile Strength | 175 psi minimum | ASTM D 412 |
| Adhesion-in-Peel | 20 lbs/linear inch (pli) | ASTM C 794 |
| Service Temperature Range | -20 °F to 180 °F | TT-S-00230 C |
| Final Cure | 5 to 8 days | ASTM C 679 |
| Color | Gray | |

**Delete Part 3 and replace with the following:**

## PART 3 EXECUTION

### 3.1 RELIEF JOINT SEALING

A. Form or saw cut joint as shown.

B. Cleaning and Drying
   1. Asphalt joint
      a. Clean 6 inches on both sides of the joint of foreign matter and loosened particles with a hot compressed air heat lance immediately before sealing the joint.
      b. Adequate cleaning is determined by surface darkening at least 12 inches wide, centered on the joint.
   2. Concrete joint
      a. Clean joint and concrete surface by sand blasting before applying the sealant.
      b. Remove sand left by sandblasting from the joint and surrounding surfaces using compressed air.

C. Use a backer rod compatible with the sealant, when shown.

D. Apply hot poured joint sealant as shown.

END OF SECTION

**Supplemental Specification**
**2017 Standard Specification Book**

**SECTION 13557M**

# VARIABLE MESSAGE SIGN

**Delete Article 2.1 and replace with the following:**

## 2.1 STATE FURNISHED EQUIPMENT

A. VMS display

B. VMS controller

C. VMS cable (fiber optic)

**Add the following to Article 2.3:**

B. Power Disconnect – Refer to AT Series Standard Drawings.

**Delete Article 3.2, Paragraph E and replace with the following:**

E. Make final adjustments to sign horizontal and vertical angles.
   1. Aim VMS in the direction of oncoming vehicles
   2. Freeway Type I Overhead VMS
      a. Mount on full span support structure
      b. Use for Type I VMS only
      c. Orient perpendicular to the viewing angle of motorists 800 ft before the sign
   3. Freeway Type I Cantilever VMS
      a. Mount on cantilever support structure
      b. Use for Type I and Type II VMS
      c. Orient perpendicular to the viewing angle of motorists 800 ft before the sign
   4. Roadside and Surface Street VMS
      a. Orient the sign and structure according to the plans.
      b. Adjust the sign angles to meet the motorist eyes.

**Delete Article 3.2 Paragraph H, subparagraphs 1 - 5 and replace with the following:**

1. Freeway Type 1 signs use continuous Multimode fiber and connectors supplied by the manufacturer.
   a. Terminate each fiber with manufacturer's connector.
2. Roadside and surface street signs use communications cable according to manufacturer's recommendations.
3. Coil 6 ft of extra cable in each junction box measured from the top of the junction box going out.

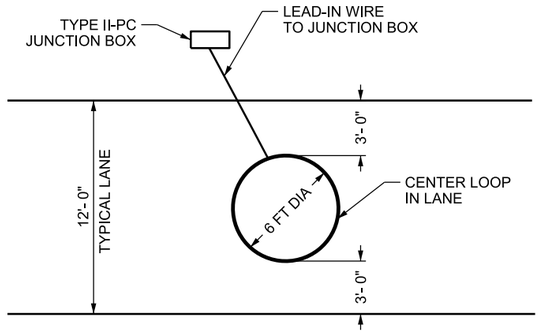


## TYPICAL LOOP DETAIL

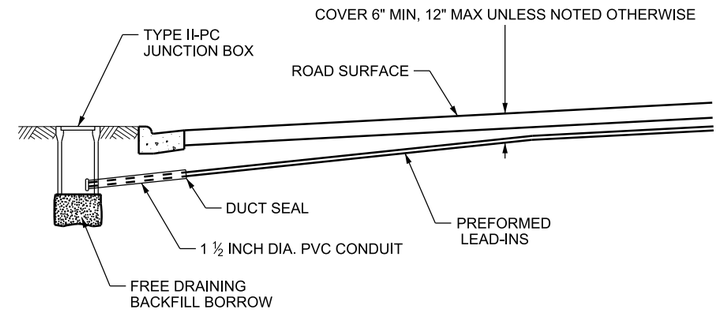


## TYPICAL SECTION

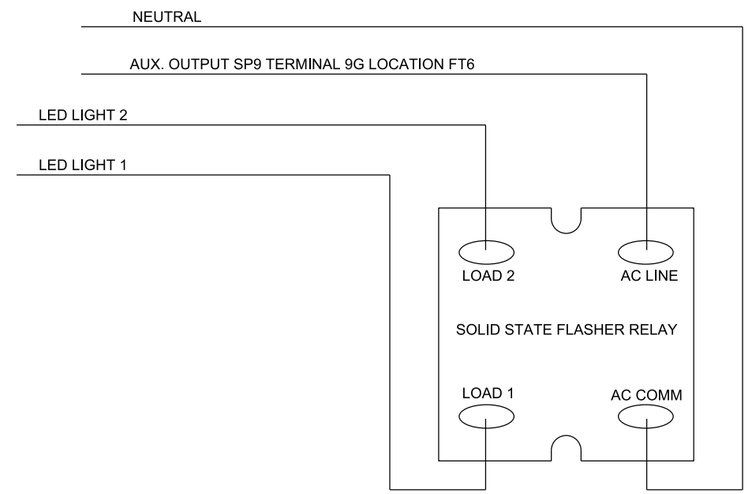


## FLASHER RELAY WIRING DETAIL

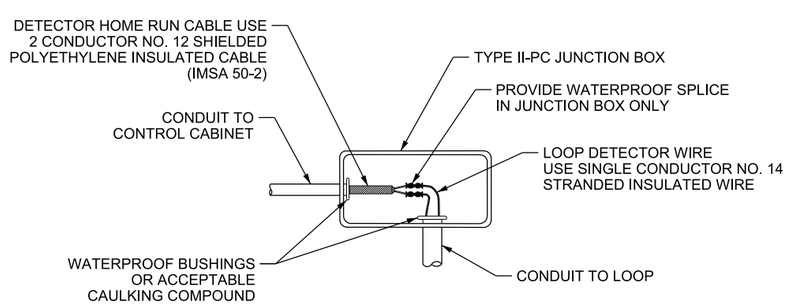


## LEAD-IN/HOME RUN SPLICE DETAIL

**NOTES:**

1. USE SCHEDULE 40 PVC CONDUIT OR HDPE CONDUIT ONLY. REFER TO STANDARD SPECIFICATION 13553.
2. USE A SEPARATE WIRE FOR EACH LOOP. EACH LOOP WIRE TO BE CONTINUOUS, WITH NO SPLICES, EXCEPT WITH THE HOMERUN WIRE AT THE JUNCTION BOX. USE SEPARATE CONDUCTOR HOMERUN FOR EACH DETECTOR NUMBER ASSIGNMENT. REFER TO STD DWG AT 5.
3. INSPECT AND TEST ALL LOOPS. REFER TO STANDARD SPECIFICATION 13591.

SUPPLEMENTAL DRAWING

| NO. | DATE | APPR. | REMARKS |
|---|---|---|---|
| 1 | 10/25/2018 | JBY | SWITCHED WIRES IN LEAD-IN/HOME RUN SPLICE DETAIL. |

**UTAH DEPARTMENT OF TRANSPORTATION**
STANDARD DRAWINGS FOR ROAD AND BRIDGE CONSTRUCTION
SALT LAKE CITY, UTAH

RECOMMENDED FOR APPROVAL — OCT 25, 2018 DATE
CHAIRMAN STANDARDS COMMITTEE APPROVED — OCT 25, 2018 DATE
DEPUTY DIRECTOR

LOOP DETECTOR
AND WIRING DETAILS

STANDARD DRAWING TITLE

STD. DWG. NO.
AT 4

DGN File: O:\StandardsandSpecsSection\2017Section\All Supp Issues\Issue # 7 10-25-2018\Drawings\AT04.dgn
05-NOV-2018

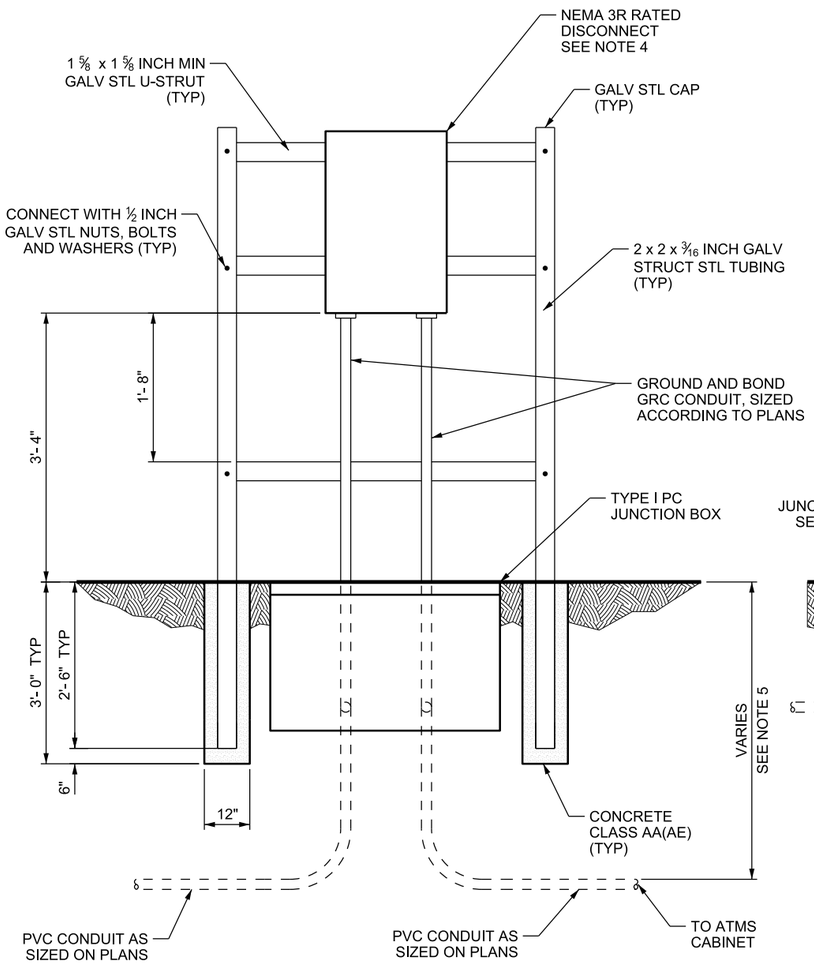


A **SUPPLEMENTAL DISCONNECT FRAME**

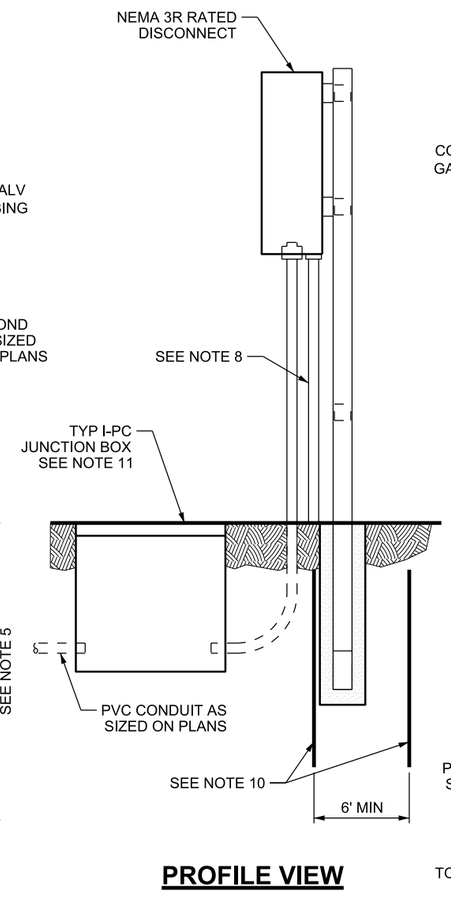


**PROFILE VIEW**

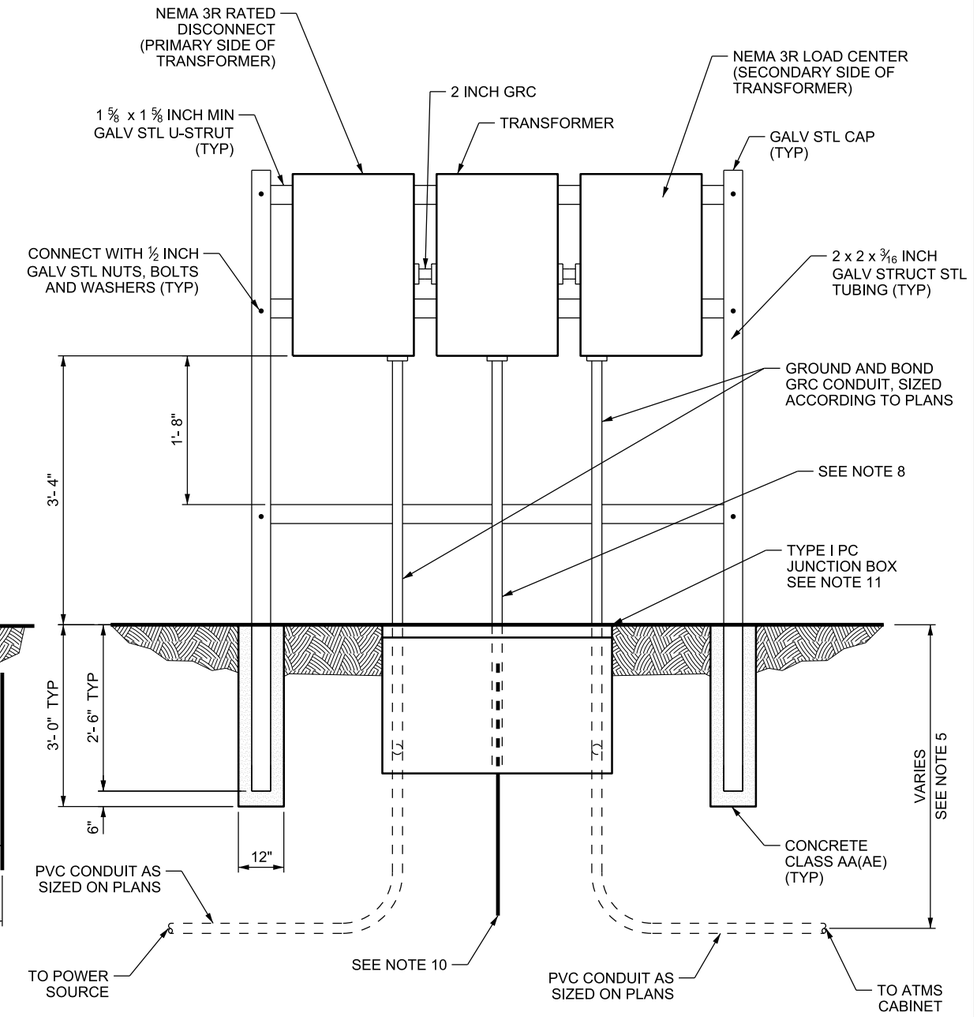


B **SUPPLEMENTAL DISCONNECT WITH TRANSFORMER FRAME**

**NOTES:**

1. LOCATE FRAME 10 TO 15 FT FROM CABINET AND ATMS EQUIPMENT.
2. ROUND OFF SHARP EDGES OF STRUCTURAL TUBING. PAINT CUT ENDS OF FRAMING STRUTS WITH ZINC RICH PAINT.
3. APPLY CORROSION PROTECTION TO PORTION OF STRUT BELOW GRADE.
4. ATTACH TRANSFORMER, DISCONNECT AND LOAD CENTER TO FRAMING STRUT WITH WATERTIGHT GASKETS AND GALVANIZED HARDWARE.
5. REFER TO STANDARD SPECIFICATION 13553 FOR CONDUIT DEPTH.
6. USE ONLY FACTORY PRODUCED CONDUIT SWEEPS.
7. SIZE ENCLOSURE TO ACCOMMODATE CONDUIT SIZES PER PLAN.
8. INSTALL 1 INCH SCHEDULE 80 PVC AS PROTECTION FOR GROUNDING ELECTRODE CONDUCTOR.
9. ALL MATERIALS USED MUST BE RATED FOR THE VOLTAGE AND CURRENT AS SHOWN.
10. INSTALL 2 EACH 10 FT X ¾ INCH GROUND RODS DIRECTLY BELOW SUPPORT FRAME, SPACED MINIMUM 6 FT APART AT TRANSFORMER LOCATIONS. INSTALL 6 AWG COPPER GROUNDING ELECTRODE CONDUCTOR BETWEEN GROUND RODS 6 INCHES BELOW GRADE AND BOND TO TRANSFORMER SECONDARY ACCORDING TO NEC ARTICLE 250 REQUIREMENTS.
11. LOCATE TYPE I PC JUNCTION BOX MINIMUM 6 FT AND MAXIMUM 10 FT FROM FRAME.

SUPPLEMENTAL DRAWING

REVISIONS

| NO. | DATE | APPR. | REMARKS |
|---|---|---|---|
| 1 | 08/31/17 | MMA | CORRECTED DIMENSION ERROR, ADDED REFERENCE TO NOTE 11 |
| 2 | 10/25/18 | JBY | CORRECTED CALL OUT, NOTE 1, ADDED |

**UTAH DEPARTMENT OF TRANSPORTATION**
STANDARD DRAWINGS FOR ROAD AND BRIDGE CONSTRUCTION
SALT LAKE CITY, UTAH

RECOMMENDED FOR APPROVAL — OCT 25, 2018 DATE
CHAIRMAN STANDARDS COMMITTEE APPROVED — OCT 25, 2018 DATE
DEPUTY DIRECTOR

ATMS CABINET AND EQUIPMENT DISCONNECT AND TRANSFORMER FRAME
STANDARD DRAWING TITLE

STD. DWG. NO.
AT 9

DGN File:D:\StandardsandSpecsSection\2017Section\All Supp Issues\Issue # 7 10-25-2018\Drawings\AT09.dgn
05-NOV-2018

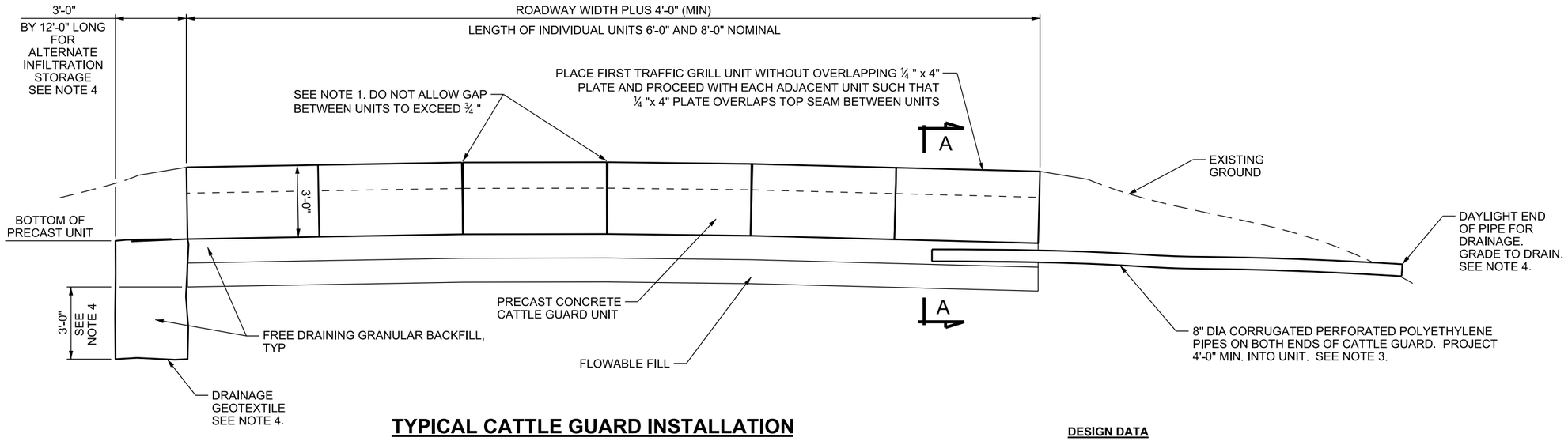


## TYPICAL CATTLE GUARD INSTALLATION

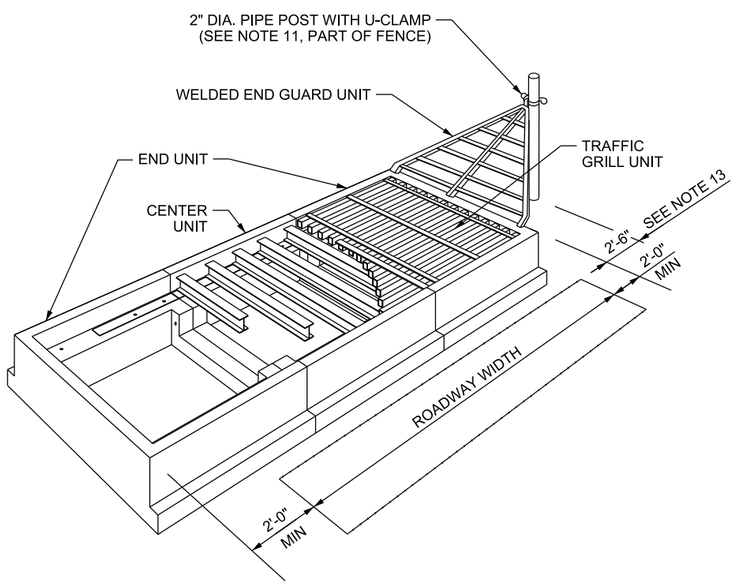


## ISOMETRIC VIEW

SOME ELEMENTS NOT SHOWN FOR CLARITY

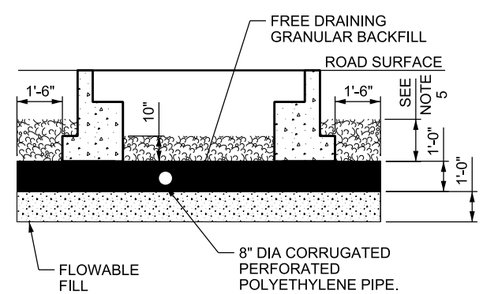


## SECTION A-A

AT END UNIT WALL

**DESIGN DATA**

HL-93 LOADING ACCORDING TO AASHTO LRFD BRIDGE DESIGN AND INTERIM SPECIFICATIONS

STRUCTURAL CONCRETE
145 PCF f'c = 4.0 KSI n = 8 CLASS AA(AE)

REINFORCING STEEL
fy = 60 KSI

STRUCTURAL STEEL
Fy = 36 KSI

**GENERAL NOTES:**

1. TOP OF CATTLE GUARD PARALLEL TO THE PROFILE GRADE AND SUPERELEVATION.
2. OVER-EXCAVATE SOIL 2 FT AND BACKFILL WITH FLOWABLE FILL TOPPED BY COMPACTED FREE DRAINING GRANULAR BACKFILL.
3. WRAP BURIED ENDS IN NON-WOVEN DRAINAGE GEOTEXTILE FILTER FABRIC.
4. PROVIDE FREE DRAINING GRANULAR BACKFILL IN AN INFILTRATION STORAGE WRAPPED IN DRAINAGE GEOTEXTILE IF SITE CONDITIONS DO NOT PERMIT EXTENDING THE PIPE TO DAYLIGHT.
5. BACKFILL TO BOTTOM OF PAVEMENT SECTION.
6. USE COATED DEFORMED-CARBON REINFORCING STEEL BARS CONFORMING TO ASTM A 775 OR AASHTO M 111 AND AASHTO M 31 GRADE 60.
7. USE STRUCTURAL STEEL CONFORMING TO AASHTO M 270 GRADE 36 AND GALVANIZE AFTER FABRICATION IN ACCORDANCE WITH AASHTO M 111 (ASTM A 123).
8. USE BOLTS THAT CONFORM TO ASTM A 307, WASHERS THAT CONFORM TO ASTM F 436, AND NUTS THAT CONFORM TO ASTM A 563.
9. ANY MODIFICATION REQUIRES APPROVAL BY THE ENGINEER.
10. USE CONCRETE CLASS AA(AE).
11. SEE FG SERIES STANDARD DRAWINGS FOR FENCE INSTALLATION DETAILS.
12. A DRAFT MAY BE INCLUDED ON INSIDE FACES OF THE PRECAST UNIT. DO NOT DISRUPT LOCATION OF ATTACHED ELEMENTS OR CONFLICT WITH TRAFFIC GRILL UNIT DIMENSIONS. MAINTAIN VERTICAL EXTERIOR FACES.
13. INSTALL WELDED END GUARD UNIT AT 45° ANGLE TO ROADWAY SURFACE.

SUPPLEMENTAL DRAWING

REVISIONS

| NO. | DATE | APPR. | REMARKS |
|---|---|---|---|
| 1 | 10/25/18 | JWC | COMPLETE REVISION TO CATTLE GUARD |

**UTAH DEPARTMENT OF TRANSPORTATION**
STANDARD DRAWINGS FOR ROAD AND BRIDGE CONSTRUCTION
SALT LAKE CITY, UTAH

RECOMMENDED FOR APPROVAL — DATE OCT.25, 2018
CHAIRMAN STANDARDS COMMITTEE APPROVED — DATE OCT.25,2018
DEPUTY DIRECTOR

STANDARD DRAWING TITLE
PRECAST CONCRETE CATTLE GUARD - GENERAL

STD. DWG. NO.
SW 1A

DGN File: Q:\Standardsand\Specs\Section\2017Section\All Supp Issues\Issue # 7 10-25-2018\Drawings\SW01A.dgn
05-NOV-2018

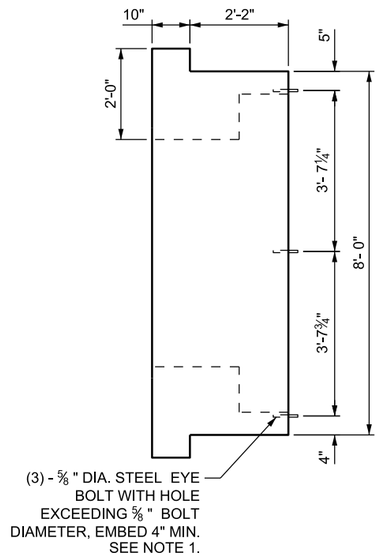


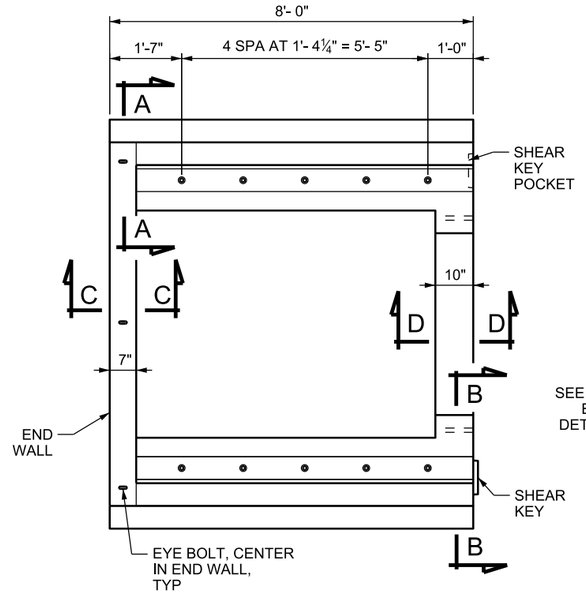


## 8'-0" END UNIT

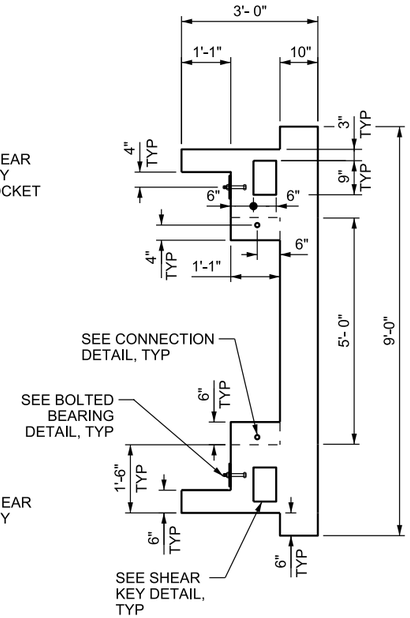


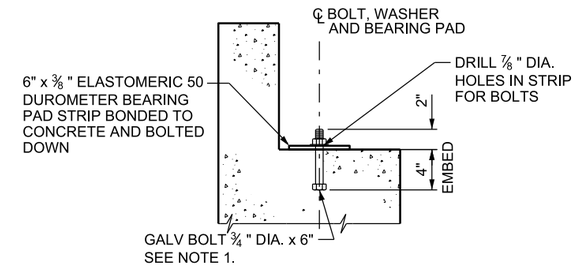


## BOLTED BEARING DETAIL

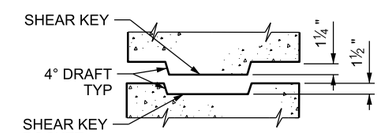


## SHEAR KEY DETAIL

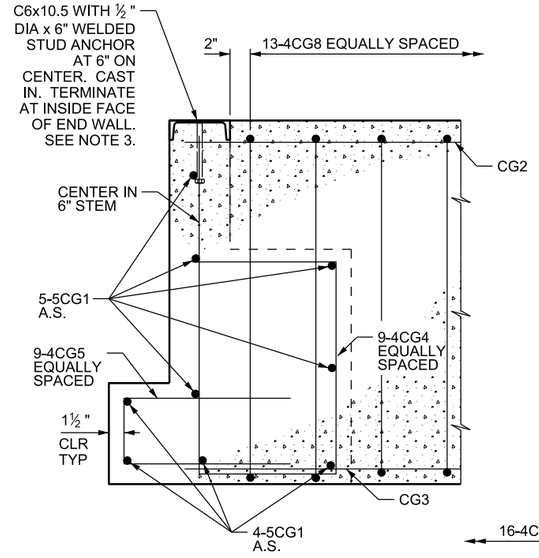


## SECTION A-A

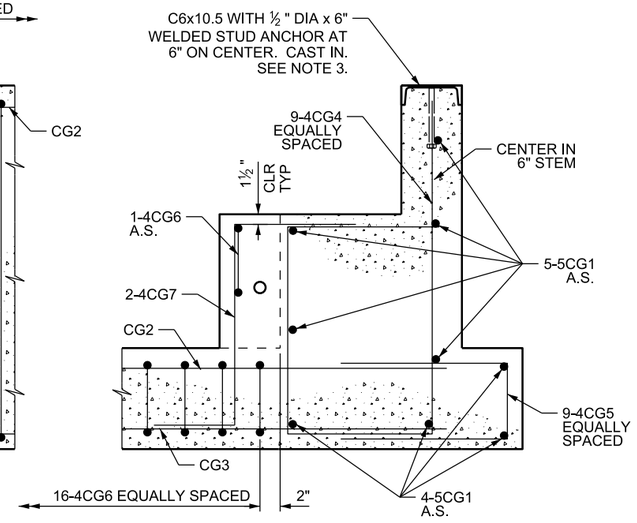


## SECTION B-B

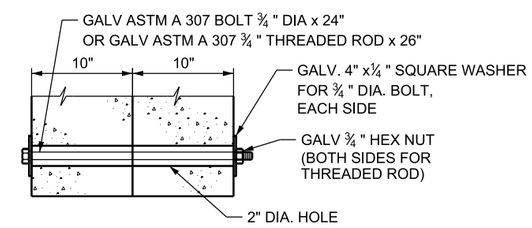


## CONNECTION DETAIL

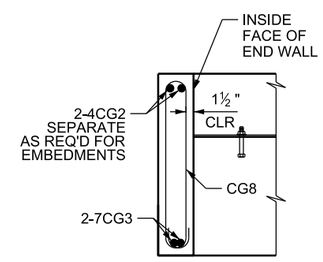


## SECTION C-C

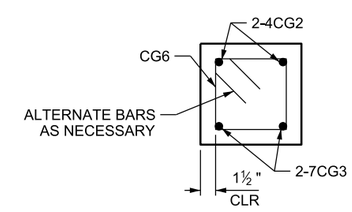


## SECTION D-D

**NOTES:**

1. FERRULE LOOP INSERTS SIZED FOR A BOLT OF EQUIVALENT DIAMETER TO THAT SHOWN MAY BE USED INSTEAD OF EMBEDDED BOLTS. FABRICATOR TO INCLUDE ASSOCIATED BOLT, OR EYE BOLT, OF LENGTH APPROPRIATE FOR FERRULE.
2. PROVIDE EMBEDDED LIFTING DEVICES CAPABLE OF SUPPORTING 20,000 LB MINIMUM TO LIFT THE PRECAST CATTLE GUARD UNIT INTO ITS FINAL POSITION.
3. WEEPHOLES ARE PERMITTED IN THE CHANNEL SECTION TO RELEASE ENTRAPPED AIR.

## REINFORCING STEEL SCHEDULE FOR END UNIT

| MARK | LOCATION | SIZE | REQ'D | LENGTH | TOTAL | SKETCH |
|---|---|---|---|---|---|---|
| CG1 | CATTLE GUARD | 5 | 18 | 7'-8" | 138'-0" | |
| CG2 | CATTLE GUARD | 4 | 4 | 7'-8" | 30'-8" | |
| CG3 | CATTLE GUARD | 7 | 4 | 7'-8" | 30'-8" | |
| CG4 | CATTLE GUARD | 4 | 18 | 6'-11" | 124'-6" | |
| CG5 | CATTLE GUARD | 4 | 18 | 3'-5" | 61'-6" | 1'-5", 7", 2'-9", 1'-3", 1'-8", 1'-3" |
| CG6 | CATTLE GUARD | 4 | 16 | 3'-1" | 49'-4" | 135° STD. HOOK (7", 7") |
| CG7 | CATTLE GUARD | 4 | 4 | 3'-6" | 14'-0" | 90° STD. HOOK (1'-2", 1'-8") |
| CG8 | CATTLE GUARD | 4 | 13 | 6'-10" | 88'-10" | 180° STD. HOOK (2'-9", 4") |

## STRUCTURAL STEEL PER UNIT

| ITEM | REQ'D | SIZE | LENGTH |
|---|---|---|---|
| CHANNEL | 2 | C6x10.5 | 7'- 5" |
| STUD ANCHOR | 30 | ½ " DIA | 0'- 6" |

SUPPLEMENTAL DRAWING

REVISIONS

| NO. | DATE | APPR. | REMARKS |
|---|---|---|---|
| 1 | 10/25/18 | JWC | COMPLETE REVISION TO CATTLE GUARD |

UTAH DEPARTMENT OF TRANSPORTATION
STANDARD DRAWINGS FOR ROAD AND BRIDGE CONSTRUCTION
SALT LAKE CITY, UTAH

RECOMMENDED FOR APPROVAL — OCT.25, 2018 DATE
CHAIRMAN STANDARDS COMMITTEE APPROVED — OCT.25, 2018 DATE
DEPUTY DIRECTOR

STANDARD DRAWING TITLE
8'-0" PRECAST CONCRETE CATTLE GUARD END UNIT

STD. DWG. NO.
SW 1B

DGN File: Q:\StandardsandSpecsSection\2017Section\All Supp Issues\Issue # 7 10-25-2018\Drawings\SW01B.dgn
05-NOV-2018

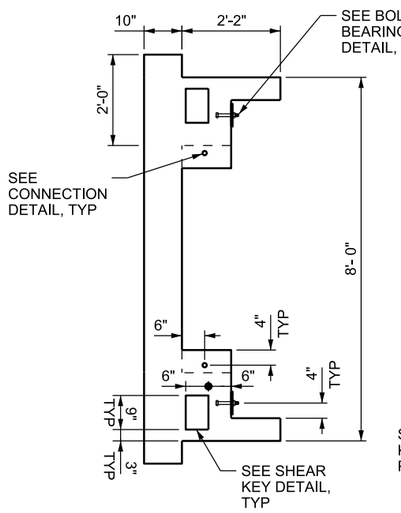


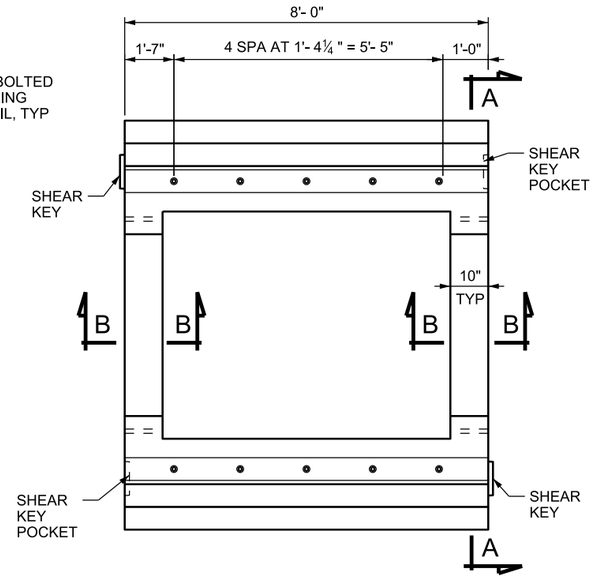


## 8'-0" CENTER UNIT

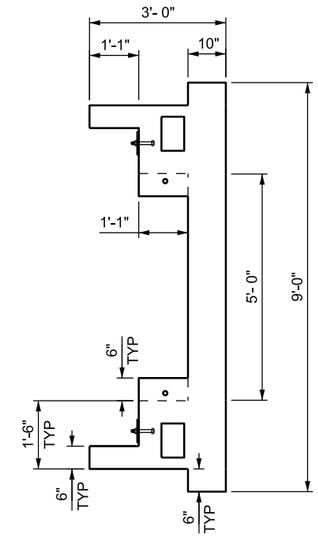


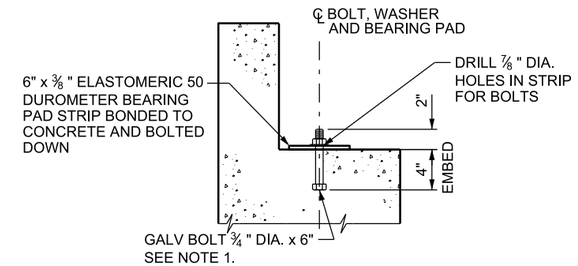


## BOLTED BEARING DETAIL

## SHEAR KEY DETAIL

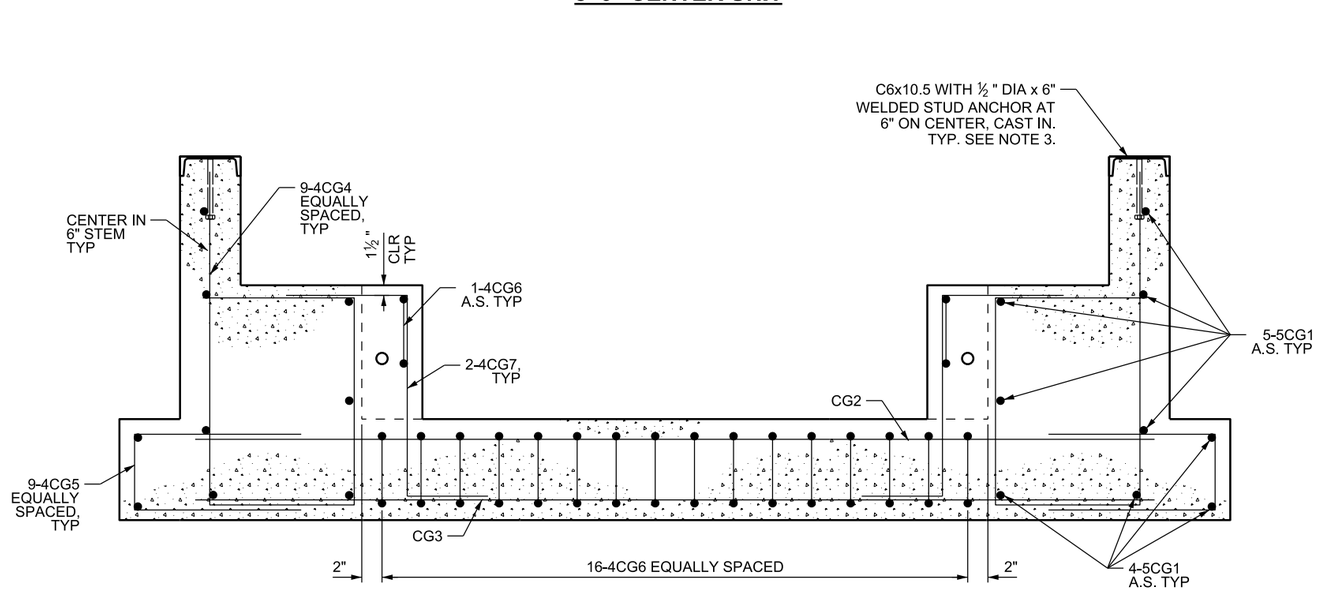


## SECTION A-A

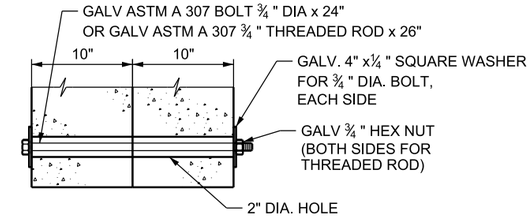


## CONNECTION DETAIL

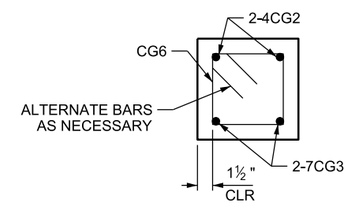


## SECTION B-B

**NOTES:**

1. FERRULE LOOP INSERTS SIZED FOR A BOLT OF EQUIVALENT DIAMETER TO THAT SHOWN MAY BE USED INSTEAD OF EMBEDDED BOLTS. FABRICATOR TO INCLUDE ASSOCIATED BOLT, OR EYE BOLT, OF LENGTH APPROPRIATE FOR FERRULE.
2. PROVIDE EMBEDDED LIFTING DEVICES CAPABLE OF SUPPORTING 20,000 LB MINIMUM TO LIFT THE PRECAST CATTLE GUARD UNIT INTO ITS FINAL POSITION.
3. WEEPHOLES ARE PERMITTED IN THE CHANNEL SECTION TO RELEASE ENTRAPPED AIR.

### REINFORCING STEEL SCHEDULE FOR CENTER UNIT

| MARK | LOCATION | SIZE | REQ'D | LENGTH | TOTAL | SKETCH |
|---|---|---|---|---|---|---|
| CG1 | CATTLE GUARD | 5 | 18 | 7'-8" | 138'-0" | |
| CG2 | CATTLE GUARD | 4 | 4 | 7'-8" | 30'-8" | |
| CG3 | CATTLE GUARD | 7 | 4 | 7'-8" | 30'-8" | |
| CG4 | CATTLE GUARD | 4 | 18 | 6'-11" | 124'-6" | 1'-3", 2'-9", 1'-8", 1'-3" |
| CG5 | CATTLE GUARD | 4 | 18 | 3'-5" | 61'-6" | 1'-5", 7" |
| CG6 | CATTLE GUARD | 4 | 32 | 3'-1" | 98'-8" | 135° STD. HOOK, 7", 7" |
| CG7 | CATTLE GUARD | 4 | 8 | 3'-6" | 28'-0" | 90° STD. HOOK, 1'-2", 1'-8" |

### STRUCTURAL STEEL PER UNIT

| ITEM | REQ'D | SIZE | LENGTH |
|---|---|---|---|
| CHANNEL | 2 | C6x10.5 | 8'- 0" |
| STUD ANCHOR | 32 | ½ " DIA | 0'- 6" |

SUPPLEMENTAL DRAWING

REVISIONS

| NO. | DATE | APPR. | REMARKS |
|---|---|---|---|
| 1 | 10/25/18 | JWC | COMPLETE REVISION TO CATTLE GUARD |

**UTAH DEPARTMENT OF TRANSPORTATION**
STANDARD DRAWINGS FOR ROAD AND BRIDGE CONSTRUCTION
SALT LAKE CITY, UTAH

RECOMMENDED FOR APPROVAL — OCT.25, 2018 DATE
CHAIRMAN STANDARDS COMMITTEE APPROVED — OCT.25, 2018 DATE
DEPUTY DIRECTOR

STANDARD DRAWING TITLE: 8'-0" PRECAST CONCRETE CATTLE GUARD CENTER UNIT

STD. DWG. NO. SW 1C

DGN File: Q:\StandardsandSpecsSection\2017Section\All Supp Issues\Issue # 7 10-25-2018\Drawings\SW01C.dgn
05-NOV-2018

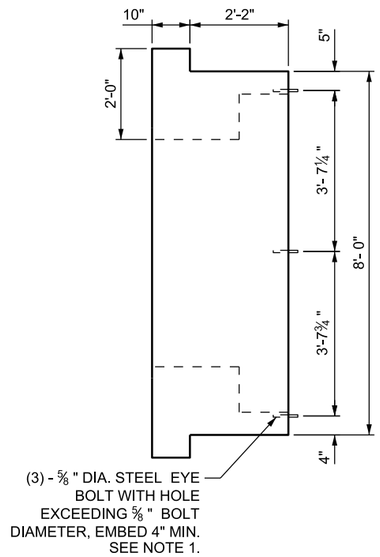


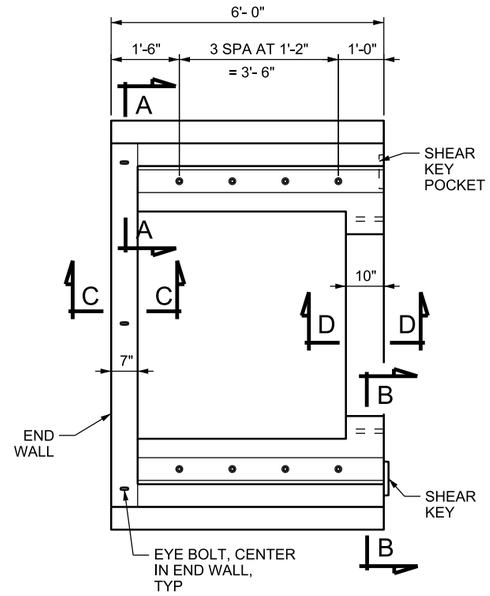


## 6'-0" END UNIT

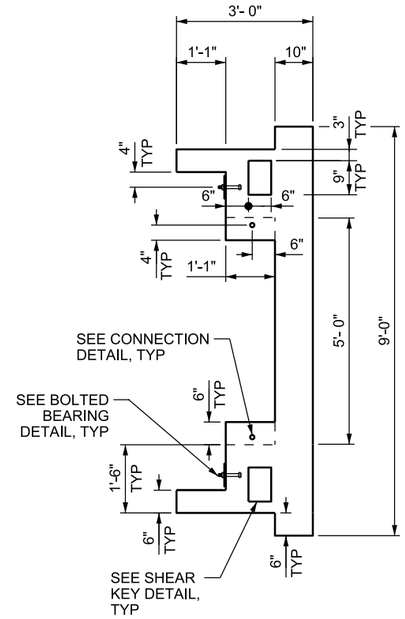


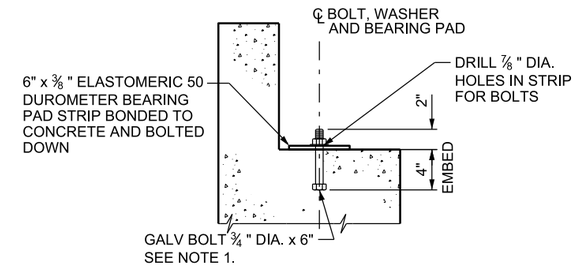


## BOLTED BEARING DETAIL

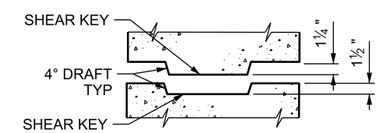


## SHEAR KEY DETAIL

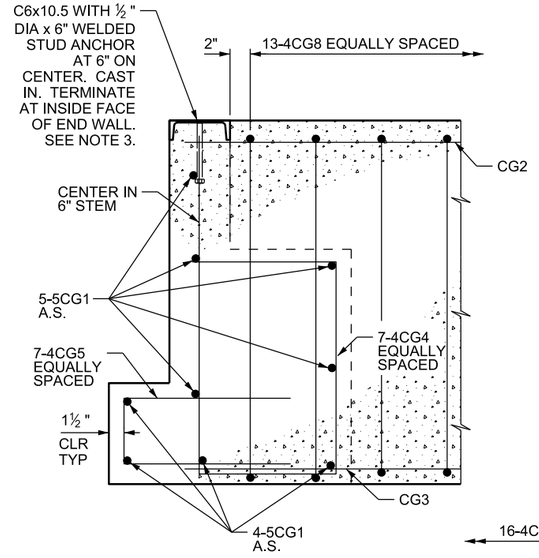


## SECTION A-A

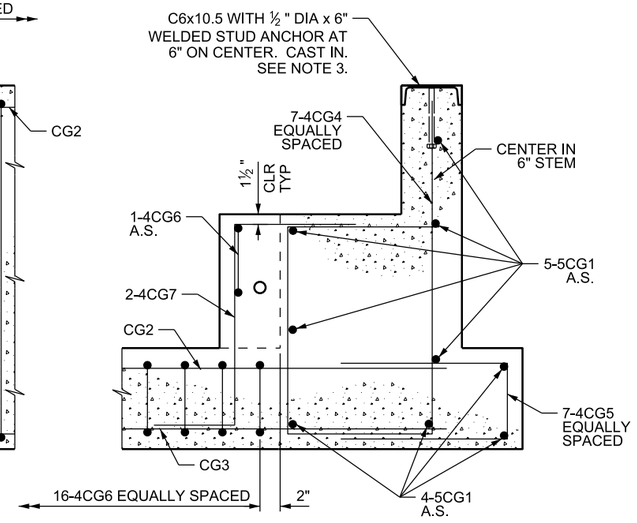


## SECTION B-B

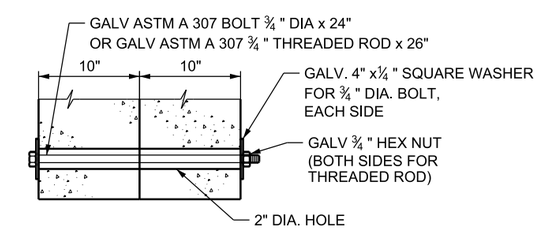


## CONNECTION DETAIL

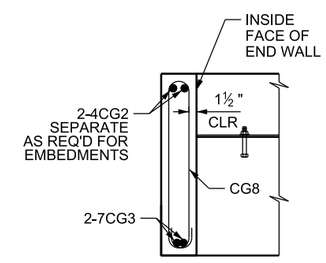


## SECTION C-C

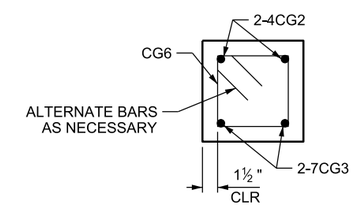


## SECTION D-D

**NOTES:**

1. FERRULE LOOP INSERTS SIZED FOR A BOLT OF EQUIVALENT DIAMETER TO THAT SHOWN MAY BE USED INSTEAD OF EMBEDDED BOLTS. FABRICATOR TO INCLUDE ASSOCIATED BOLT, OR EYE BOLT, OF LENGTH APPROPRIATE FOR FERRULE.
2. PROVIDE EMBEDDED LIFTING DEVICES CAPABLE OF SUPPORTING 20,000 LB MINIMUM TO LIFT THE PRECAST CATTLE GUARD UNIT INTO ITS FINAL POSITION.
3. WEEPHOLES ARE PERMITTED IN THE CHANNEL SECTION TO RELEASE ENTRAPPED AIR.

## REINFORCING STEEL SCHEDULE FOR END UNIT

| MARK | LOCATION | SIZE | REQ'D | LENGTH | TOTAL | SKETCH |
|---|---|---|---|---|---|---|
| CG1 | CATTLE GUARD | 5 | 18 | 7'-8" | 138'-0" | |
| CG2 | CATTLE GUARD | 4 | 4 | 7'-8" | 30'-8" | |
| CG3 | CATTLE GUARD | 7 | 4 | 7'-8" | 30'-8" | |
| CG4 | CATTLE GUARD | 4 | 14 | 6'-11" | 96'-10" | |
| CG5 | CATTLE GUARD | 4 | 14 | 3'-5" | 47'-10" | |
| CG6 | CATTLE GUARD | 4 | 16 | 3'-1" | 49'-4" | |
| CG7 | CATTLE GUARD | 4 | 4 | 3'-6" | 14'-0" | 90° STD. HOOK |
| CG8 | CATTLE GUARD | 4 | 13 | 6'-10" | 88'-10" | |

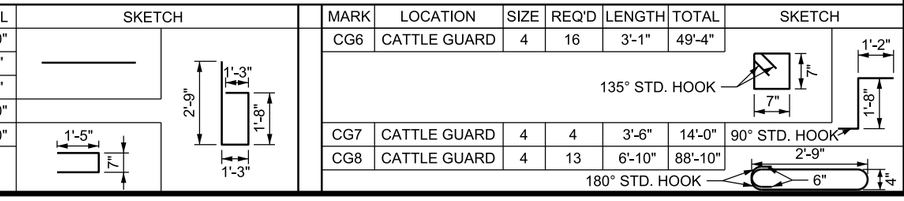


## STRUCTURAL STEEL PER UNIT

| ITEM | REQ'D | SIZE | LENGTH |
|---|---|---|---|
| CHANNEL | 2 | C6x10.5 | 5'- 5" |
| STUD ANCHOR | 22 | ½" DIA | 0'- 6" |

SUPPLEMENTAL DRAWING

REVISIONS

| NO. | DATE | APPR. | REMARKS |
|---|---|---|---|
| 1 | 10/25/18 | JWC | NEW DRAWING. COMPLETE REVISION TO CATTLE GUARD |

UTAH DEPARTMENT OF TRANSPORTATION
STANDARD DRAWINGS FOR ROAD AND BRIDGE CONSTRUCTION
SALT LAKE CITY, UTAH

RECOMMENDED FOR APPROVAL — OCT.25, 2018 DATE
CHAIRMAN STANDARDS COMMITTEE APPROVED — OCT.25, 2018 DATE
DEPUTY DIRECTOR — DATE

STANDARD DRAWING TITLE: 6'-0" PRECAST CONCRETE CATTLE GUARD END UNIT

STD. DWG. NO. SW 1D

DGN File: Q:\StandardsandSpecsSection\2017Section\All Supp Issues\Issue # 7 10-25-2018\Drawings\SW01D.dgn
05-NOV-2018

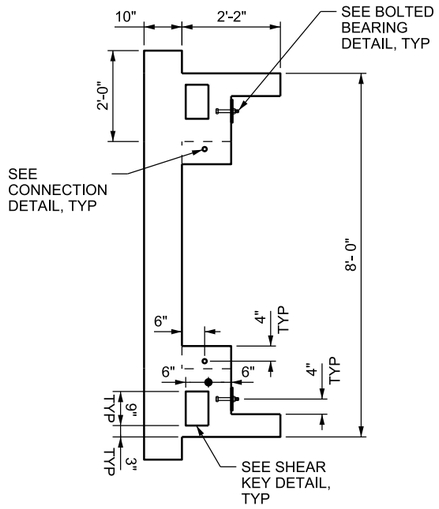


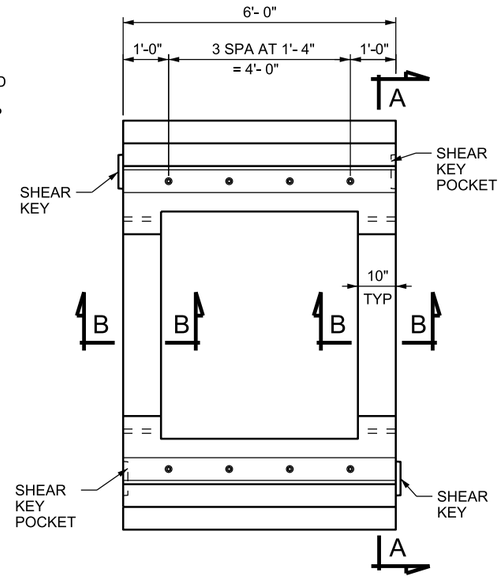


## 6'-0" CENTER UNIT

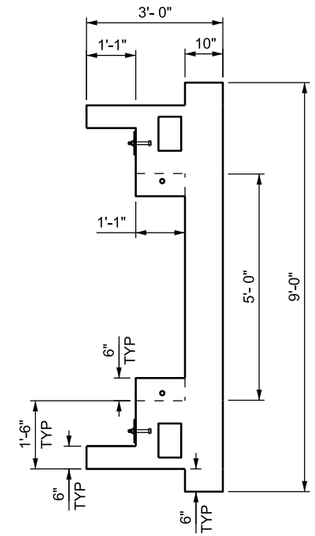


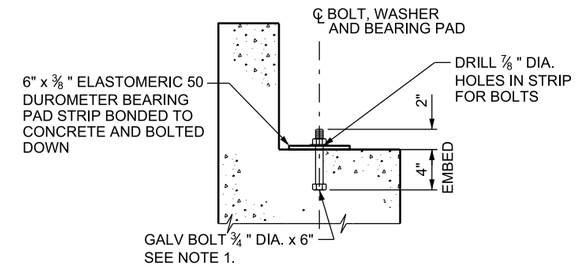


## BOLTED BEARING DETAIL

## SHEAR KEY DETAIL

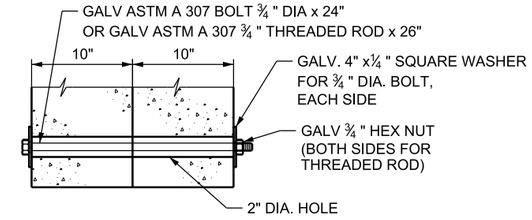


## CONNECTION DETAIL

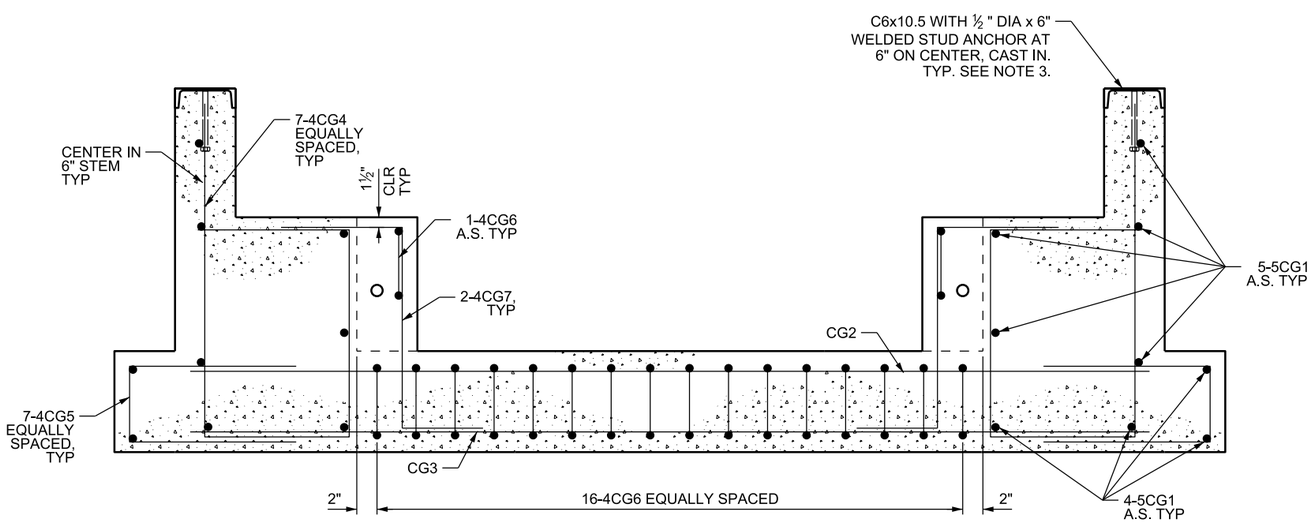


## SECTION A-A

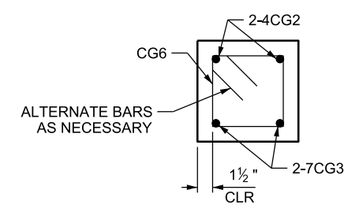


## SECTION B-B

**NOTES:**

1. FERRULE LOOP INSERTS SIZED FOR A BOLT OF EQUIVALENT DIAMETER TO THAT SHOWN MAY BE USED INSTEAD OF EMBEDDED BOLTS. FABRICATOR TO INCLUDE ASSOCIATED BOLT, OR EYE BOLT, OF LENGTH APPROPRIATE FOR FERRULE.
2. PROVIDE EMBEDDED LIFTING DEVICES CAPABLE OF SUPPORTING 20,000 LB MINIMUM TO LIFT THE PRECAST CATTLE GUARD UNIT INTO ITS FINAL POSITION.
3. WEEPHOLES ARE PERMITTED IN THE CHANNEL SECTION TO RELEASE ENTRAPPED AIR.

### REINFORCING STEEL SCHEDULE FOR CENTER UNIT

| MARK | LOCATION | SIZE | REQ'D | LENGTH | TOTAL | SKETCH |
|---|---|---|---|---|---|---|
| CG1 | CATTLE GUARD | 5 | 18 | 7'-8" | 138'-0" | |
| CG2 | CATTLE GUARD | 4 | 4 | 7'-8" | 30'-8" | |
| CG3 | CATTLE GUARD | 7 | 4 | 7'-8" | 30'-8" | |
| CG4 | CATTLE GUARD | 4 | 14 | 6'-11" | 96'-10" | 1'-3", 2'-9", 1'-8", 1'-3" |
| CG5 | CATTLE GUARD | 4 | 14 | 3'-5" | 47'-10" | 1'-5", 7" |
| CG6 | CATTLE GUARD | 4 | 32 | 3'-1" | 98'-8" | 135° STD. HOOK, 7", 7" |
| CG7 | CATTLE GUARD | 4 | 8 | 3'-6" | 28'-0" | 90° STD. HOOK, 1'-2", 1'-8" |

### STRUCTURAL STEEL PER UNIT

| ITEM | REQ'D | SIZE | LENGTH |
|---|---|---|---|
| CHANNEL | 2 | C6x10.5 | 6'- 0" |
| STUD ANCHOR | 24 | ½ " DIA | 0'- 6" |

SUPPLEMENTAL DRAWING

REVISIONS

| NO. | DATE | APPR. | REMARKS |
|---|---|---|---|
| 1 | 10/25/18 | JWC | NEW DRAWING. COMPLETE REVISION TO CATTLE GUARD |

UTAH DEPARTMENT OF TRANSPORTATION
STANDARD DRAWINGS FOR ROAD AND BRIDGE CONSTRUCTION
SALT LAKE CITY, UTAH

RECOMMENDED FOR APPROVAL — OCT.25, 2018 DATE
CHAIRMAN STANDARDS COMMITTEE APPROVED — OCT.25, 2018 DATE
DEPUTY DIRECTOR

STANDARD DRAWING TITLE: 6'-0" PRECAST CONCRETE CATTLE GUARD CENTER UNIT

STD. DWG. NO. SW 1E

DGN File: Q:\StandardsandSpecs\Section\2017Section\All Supp Issues\Issue # 7 10-25-2018\Drawings\SW01E.dgn
05-NOV-2018

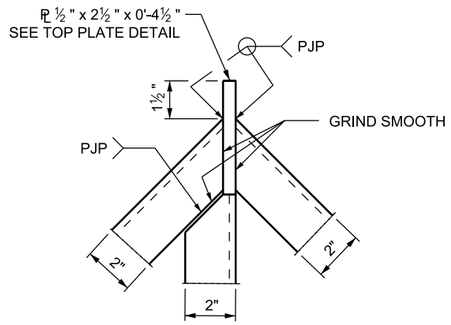


## TOP JOINT DETAIL

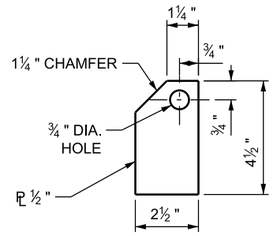


## TOP PLATE DETAIL

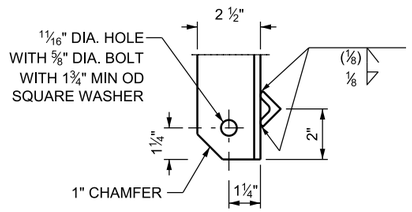


## BASE DETAIL

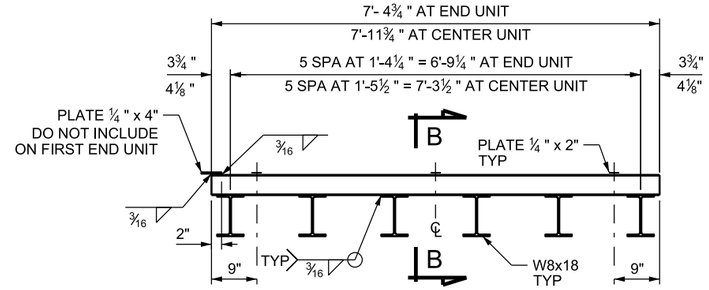


## 8'-0" TRAFFIC GRILL UNIT

APPROXIMATE WEIGHT 1,400 LB

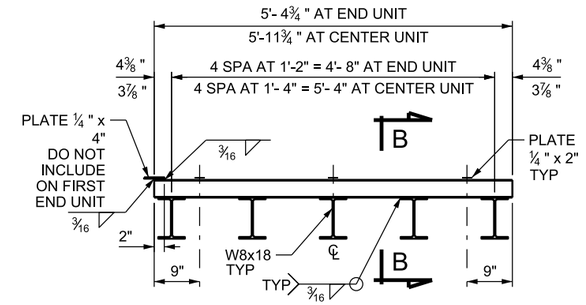


## 6'-0" TRAFFIC GRILL UNIT

APPROXIMATE WEIGHT 1,100 LB

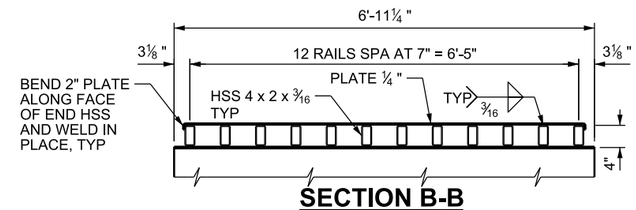


## SECTION B-B

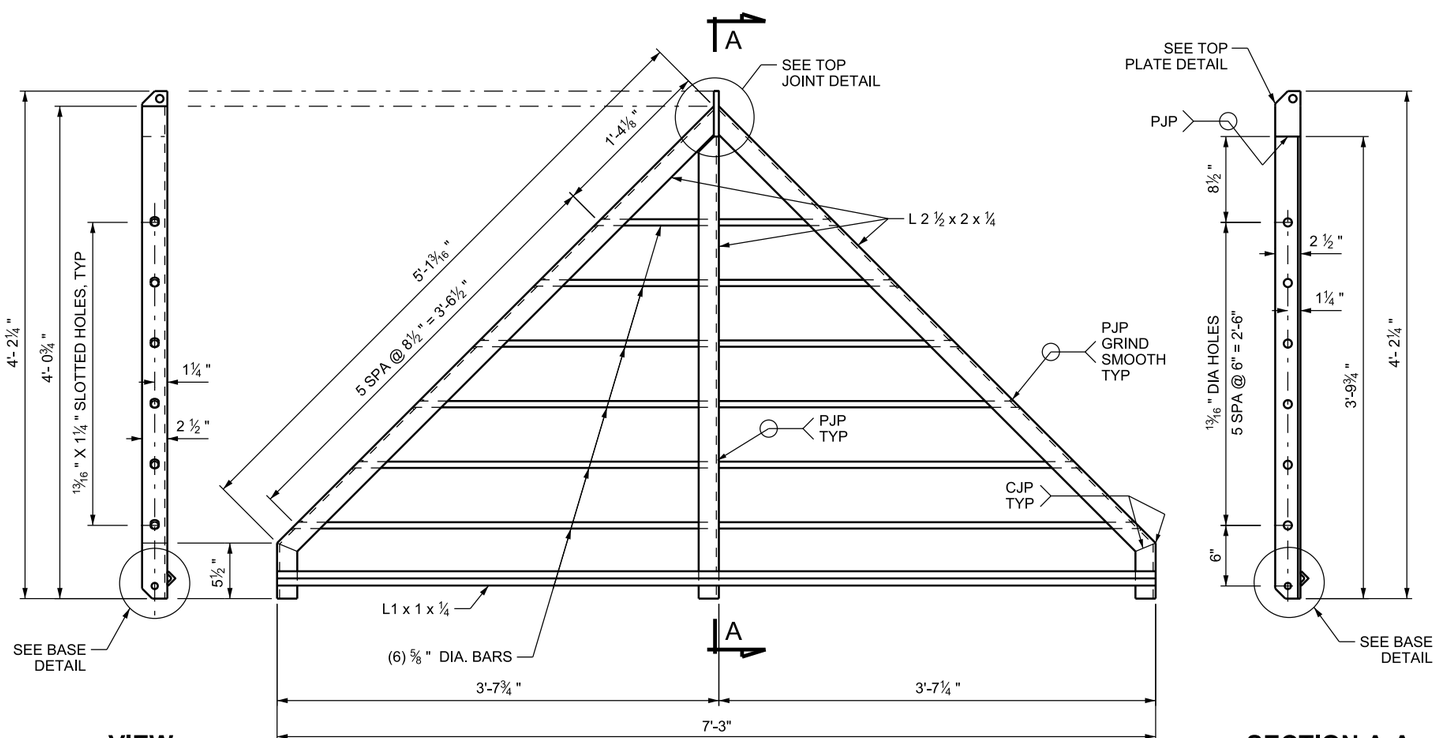


## VIEW

OTHER SIDE SIMILAR




## SECTION A-A

## WELDED END GUARD UNIT

WT.W/BOLTS, U-CLAMP 105 LBS (2 REQUIRED)

## STRUCTURAL STEEL PER UNIT

### 8'- 0" END UNIT

| ITEM | REQ'D | SIZE | LENGTH |
|---|---|---|---|
| BEAM | 6 | W8 x 18 | 6'-11¼ " |
| HSS | 13 | 4 x 2 x 3/16 | 7'- 4¾ " |
| 2" PLATE | 3 | ¼" x 2" | 7'- 0" |
| 4" PLATE | 1* | ¼ " x 4" | 6'- 7" |

* DO NOT INCLUDE ON FIRST TRAFFIC GRILL UNIT

### 8'- 0" CENTER UNIT

| ITEM | REQ'D | SIZE | LENGTH |
|---|---|---|---|
| BEAM | 6 | W8 x 18 | 6'-11¼ " |
| HSS | 13 | 4 x 2 x 3/16 | 7'-11¾ " |
| 2" PLATE | 3 | ¼ " x 2" | 7'- 0" |
| 4" PLATE | 1 | ¼ " x 4" | 6'- 7" |

### 6'- 0" END UNIT

| ITEM | REQ'D | SIZE | LENGTH |
|---|---|---|---|
| BEAM | 5 | W8 x 18 | 6'-11¼ " |
| HSS | 13 | 4 x 2 x 3/16 | 5'- 4¾ " |
| 2" PLATE | 3 | ¼ " x 2" | 7'- 0" |
| 4" PLATE | 1* | ¼ " x 4" | 6'- 7" |

* DO NOT INCLUDE ON FIRST TRAFFIC GRILL UNIT

### 6'- 0" CENTER UNIT

| ITEM | REQ'D | SIZE | LENGTH |
|---|---|---|---|
| BEAM | 5 | W8 x 18 | 6'-11¼ " |
| HSS | 13 | 4 x 2 x 3/16 | 5'-11¾ " |
| 2" PLATE | 3 | ¼ " x 2" | 7'- 0" |
| 4" PLATE | 1 | ¼ " x 4" | 6'- 7" |

SUPPLEMENTAL DRAWING

REVISIONS

| NO. | DATE | APPR. | REMARKS |
|---|---|---|---|
| 1 | 10/25/18 | JWC | NEW DRAWING. COMPLETE REVISION TO CATTLE GUARD |

**UTAH DEPARTMENT OF TRANSPORTATION**
STANDARD DRAWINGS FOR ROAD AND BRIDGE CONSTRUCTION
SALT LAKE CITY, UTAH

RECOMMENDED FOR APPROVAL — OCT.25, 2018 DATE
CHAIRMAN STANDARDS COMMITTEE APPROVED — OCT.25, 2018 DATE
DEPUTY DIRECTOR

WELDED END GUARD UNIT AND TRAFFIC GRILL UNIT
STANDARD DRAWING TITLE

STD. DWG. NO.
SW 1F

DGN File: Q:\StandardsandSpecs\Section\2017Section\All Supp Issues\Issue # 7 10-25-2018\Drawings\SW01F.dgn
05-NOV-2018

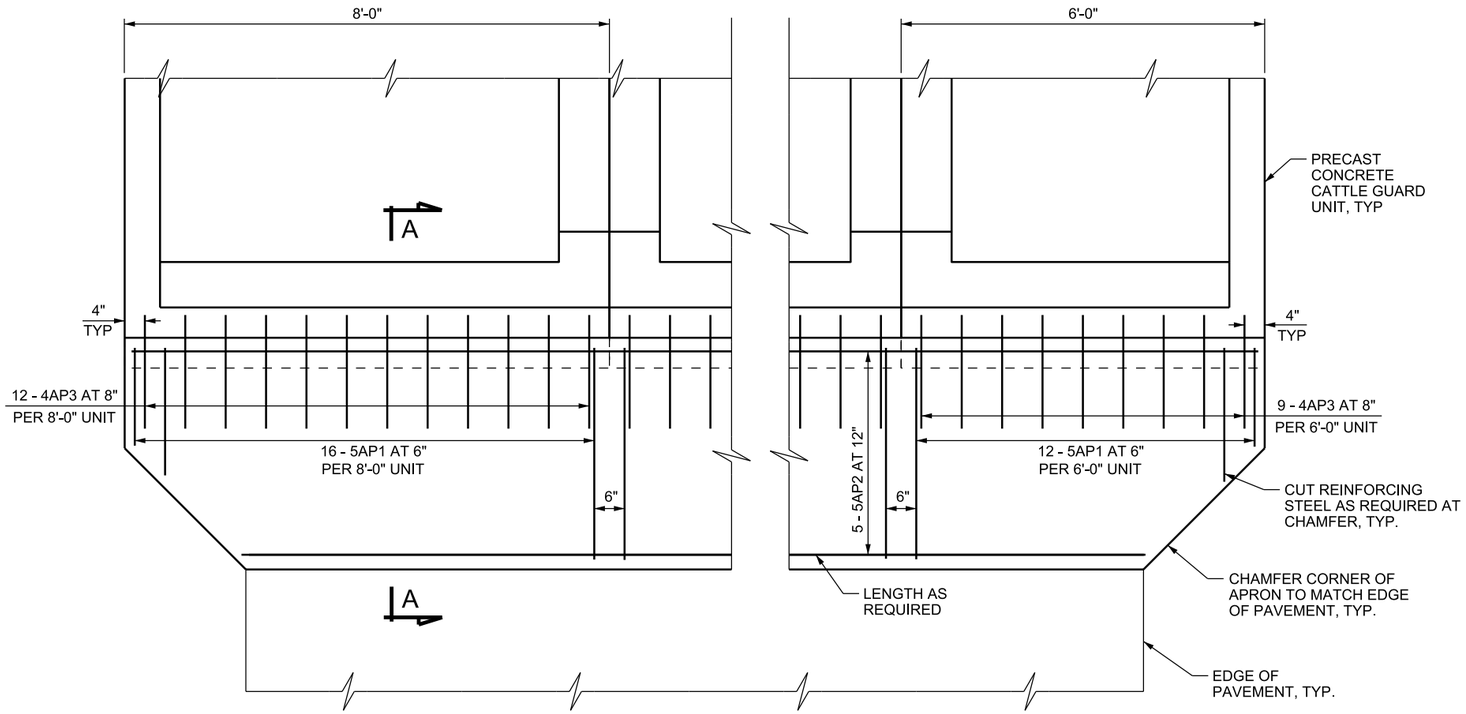


## OPTIONAL CAST-IN-PLACE APRON - PLAN

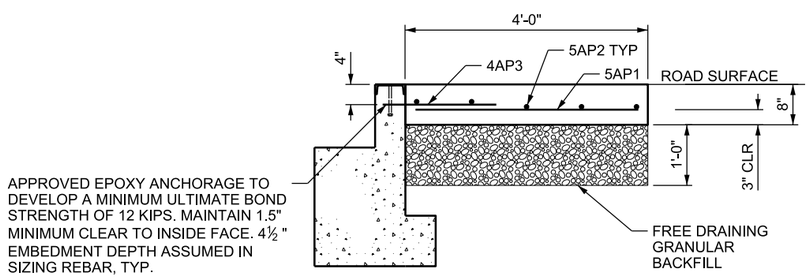


## SECTION A-A

**DESIGN DATA**

HL-93 LOADING ACCORDING TO AASHTO LRFD BRIDGE DESIGN AND INTERIM SPECIFICATIONS

STRUCTURAL CONCRETE
145 PCF f'c = 4.0 KSI n = 8 CLASS AA(AE)

REINFORCING STEEL
fy = 60 KSI

**GENERAL NOTES:**

1. USE COATED DEFORMED-CARBON REINFORCING STEEL BARS CONFORMING TO ASTM A 775 OR AASHTO M 111 AND M 31 GRADE 60.
2. ANY MODIFICATION REQUIRES APPROVAL BY THE ENGINEER.
3. USE CONCRETE CLASS AA(AE).
4. PROVIDE 2 INCH CONCRETE COVER TO REINFORCING STEEL UNLESS NOTED OTHERWISE.

REINFORCING STEEL SCHEDULE

| MARK | LOCATION | SIZE | REQ'D | LENGTH | TOTAL | SKETCH |
|---|---|---|---|---|---|---|
| AP1 | APRON | 5 | AS REQ'D | 3'-8" | AS REQ'D | |
| AP2 | APRON | 5 | 5 | AS REQ'D | AS REQ'D | ——— |
| AP3 | APRON | 4 | AS REQ'D | 1'-10½" | AS REQ'D | |

| ITEM | LOCATION | EST QTY | UNIT |
|---|---|---|---|
| FREE DRAINING GRANULAR BACKFILL (PLAN QUANTITY) | 6'-0" UNIT | 1.8 | CU YD |
| FREE DRAINING GRANULAR BACKFILL (PLAN QUANTITY) | 8'-0" UNIT | 2.4 | CU YD |
| REINFORCING STEEL - COATED | 6'-0" UNIT | 180 | LB |
| REINFORCING STEEL - COATED | 8'-0" UNIT | 250 | LB |
| STRUCTURAL CONCRETE | 6'-0" UNIT | 1.2 | CU YD |
| STRUCTURAL CONCRETE | 8'-0" UNIT | 1.6 | CU YD |

SUPPLEMENTAL DRAWING

REVISIONS

| NO. | DATE | APPR. | REMARKS |
|---|---|---|---|
| 1 | 10/25/18 | JWC | NEW DRAWING |

UTAH DEPARTMENT OF TRANSPORTATION
STANDARD DRAWINGS FOR ROAD AND BRIDGE CONSTRUCTION
SALT LAKE CITY, UTAH

RECOMMENDED FOR APPROVAL — OCT.25, 2018 DATE
CHAIRMAN STANDARDS COMMITTEE APPROVED — OCT.25, 2018 DATE
DEPUTY DIRECTOR

STANDARD DRAWING TITLE
PRECAST CONCRETE CATTLE GUARD - OPTIONAL CIP APRON

STD. DWG. NO.
SW 1G

DGN File: Q:\StandardsandSpecsSection\2017Section\All Supp Issues\Issue # 7 10-25-2018\Drawings\SW01G.dgn
05-NOV-2018

# Supplemental Issue, February 28, 2019

## Supplemental Specifications

| | |
|---|---|
| 00100M | General Provisions |
| 00120M | Bidding Requirements and Conditions |
| 00820M | Legal Relations and Responsibility to the Public |
| 01355M | Environmental Compliance |
| 02216 | Test Hole Utility **(New Specification)** |
| 02744M | Stone Matrix Asphalt (SMA) |
| 02822M | Right-of-Way Fence and Gate |
| 03211M | Reinforcing Steel and Welded Wire |

## Supplemental Drawings

| | |
|---|---|
| AT 02 | Ramp Meter Signal Head Details |
| AT 03 | Ramp Meter Detection Layout and Cabinet Placement |
| AT 14 | Solar Traffic Counting Station |
| AT 15 | RWIS Site and Foundation Details |
| AT 21 | Electronic Toll Lanes Control Systems ETC Gantry |
| BA 3B | Cast-in-Place Concrete Constant Slope Barrier – 42 Inch, Electrical Detail |
| FG 2A | Right of Way Fence and Gates (Metal Post) |
| PA 01 | General Pedestrian Access |
| PA 02 | Detectable Warning Surface Pedestrian Access |
| PA 03 | Pedestrian Access Details |
| PA 04 | Perpendicular and Median Refuge Pedestrian Access |
| PA 05 | Parallel Pedestrian Access |
| SN 14 | Median Concrete Barrier Pivot Sign Base **(NEW DRAWING)** |
| SN 14A | Barrier Mounted Tubular Steel Sign Bases 20 SQ FT or Less **(DELETION)** |
| SN 14B | Barrier Mounted Tubular Steel Sign Bases (B5A and B5B) **(DELETION)** |
| SN 15B2 | Freeway Sign Post and Foundation Requirements |
| SN 15C | Freeway Sign Base Post Requirements (B6A, B6B, and B6C) |
| SN 15E | Freeway Sign Fuse Plate Requirements |
| ST 07 | Crosswalks, Parking, and Intersection Approaches |
| SW 1B | 8’-0” Precast Concrete Cattle Guard End Unit |
| SW 1C | 8’-0” Precast Concrete Cattle Guard Center Unit |
| SW 1D | 6’-0” Precast Concrete Cattle Guard End Unit |
| SW 1E | 6’-0” Precast Concrete Cattle Guard Center Unit |

**Supplemental Specification**
**2017 Standard Specification Book**

**SECTION 00100M**

# GENERAL PROVISIONS

**Delete Article 1.7 subparagraph C3b and replace with the following:**

b. An asterisk (*) in place of the last digit indicates that the pay item is supported by a contract specific Special Provision with changes affecting the pay item.

**Supplemental Specification**
**2017 Standard Specification Book**

**SECTION 00120M**

# BIDDING REQUIREMENTS AND CONDITIONS

**Delete Article 1.6 paragraph A and replace with the following:**

## 1.6 PREQUALIFICATION

A. Meet Department requirements for prequalification before submitting a proposal on projects where the total cost within the bidding schedule is greater than $3 million. Refer to: http://www.udot.utah.gov/go/standardsreferences

1. Prequalification Applications (including supporting and supplemental documentation) must be received by the Prequalification Board no less than 20 calendar days before the scheduled bid opening.
2. Renew prequalification yearly in order to maintain prequalification status.
   a. The Department may change a bidder's prequalification status based on the submission of additional favorable reports or evidence of unsatisfactory performance.
   b. The prequalification amount limits bidding to individual contracts of a given size or for a particular type of work.
3. Provide experience information on the Contractor's Prequalification Application and a confidential financial statement attested to by a Certified Public Accountant (CPA).
4. Include a complete report of the bidder's financial resources and liabilities, equipment, work history, and personnel.
   a. The Department establishes prequalification amount and work classification.

**Delete Article 1.7 and replace with the following:**

## 1.7 JOINT VENTURE BIDDING

A. Single Project Joint Venture:
   1. Two or more prospective companies may prequalify and bid jointly on a single contract.
   2. Each company participating in a joint venture will file a Prequalification Application that includes a confidential financial statement attested to by a CPA.
      a. Each company of the Joint Venture must be prequalified with the Department.

B. Continuing Joint Venture:
   1. Submit the following to bid jointly as a continuing joint venture on more than one contract, over a 12month period, involving two or more prospective bidders:
      a. A Prequalification Application and confidential financial statement of the joint venture audited by or attested to by a CPA.
      b. A confidential financial statement audited by or attested to by a CPA for each member.
         1) Not required if the Department has a copy on file for the application year.
   2. The Department will treat the continuing joint venture as a new firm and determine prequalification limit on that basis.

C. Complete the following under the joint venture designation before bid opening:
   1. Bid bond
   2. Department Contractor identification, password, and electronic signature
   3. Department Registration
   4. Utah Contractor license
   5. Submit a letter of intent together as a joint venture to the Specialist for the Prequalification Board indicating the exact name of the joint venture and designated administrative partners before submitting a joint venture proposal on a single project.
      a. Submit a letter of intent together with a copy of the fully executed joint venture agreement at least 20 working days prior to bid opening.

6. A copy of the joint venture agreement signed by each member of the joint venture and notarized, naming each person authorized to sign documents on its behalf.
7. Submit a corporate resolution to accompany the agreement if a member is part of a corporation.
    a. The corporate resolution will authorize the joint venture agreement and name the officers authorized to sign the joint venture agreement or contract on behalf of the corporation.

**Delete Article 1.9 subparagraph D5 and replace with the following:**

D. The Department considers a proposal irregular and rejects the proposal as non-responsive if:
    5. It lacks required bid documentation escrow, when applicable.

**Delete Article 1.9 paragraph M and replace with the following:**

M. Failure to take the actions described and acknowledged in this Article does not relieve the bidder of the responsibility for estimating the difficulty and cost of successfully performing the work and from proceeding to successfully perform the work.

**Supplemental Specification**
**2017 Standard Specification Book**

**SECTION 00820M**

# LEGAL RELATIONS AND RESPONSIBILITY TO THE PUBLIC

**Delete Article 1.16, paragraphs F and G and replace with the following:**

F. Notify the claimant in writing within 30 days from the date the claim is submitted whether the claim is granted or denied.
   1. Failure to notify the claimant will be considered a denial.
   2. Notify claimants of their right to appeal denied or partially denied claims of $5,000 or less.
      a. Provide the following information to the claimant:
         1) Claimants must direct their appeals to the Department's Risk Management Division at the following contact information:
            Department's Risk Management Division
            4501 South 2700 West
            P.O. Box 148112
            Salt Lake City, UT 84114-8430
            Phone: (801) 965-4096
            Email: udotreexamclaims@utah.gov
         2) The time deadline for submitting appeals for claim re-examination is seven days after notification of claim denial or partial denial.
         3) Department project number, project identification number (PIN) and location.
   3. The Department may overturn the Contractor's denial of the claim if the claimant is not notified within 30 days or of the right to appeal.
   4. Notify the claimant in writing within 30 days from the day the claim was submitted, whether the claim is granted or denied.
      a. Notify the claimant of the anticipated timeframe for a determination if more than 30 days is needed to fully review the submitted claim. Maintaining continued contact with the claimant every 30 days until the claim is granted or denied.
      b. Failure to respond in 30 days may be considered a denial and may result in the denial being overturned by the Risk Management Division.
   . The Risk Management Division may waive a time deadline.
   5. The Claims Re-Examination Board will not review claims filed in the small claims court, justice court, or district court.

G. Cooperate with the Department's Risk Management Division in resolving disputes regarding claim denials or partial denials from an insurance carrier.

1. The Risk Management Division will review documentation prepared by the Contractor, Insurance Carrier, Claimant, and the Department to determine if evidence provided could result in the overturn of a claim denial.
   a) The Claims Re-Examination Board may, at its sole discretion, hold in-person or telephonic hearings for claims that are determined by the Risk Management Division to show insufficient cause to potentially overturn a claim denial.
   b) The Claims Re-Examination Board may hear statements from the Contractor and the Claimant, and review documents or other evidence provided to the Risk Management Division before the hearing.
2. Neither the insurance carrier nor the Contractor has the right to intervene in a re-examination before the Risk Management Division.
3. The Risk Management Division decides the claim as expeditiously as possible.
4. The decision by the Risk Management Division is administratively final.

**Delete Articles 1.19 and 1.20 and replace with the following:**

## 1.18 AIR QUALITY PROTECTION

A. Refer to Section 01355.

B. Contact the Utah Division of Air Quality (DAQ) and obtain the appropriate Air Quality Permit for the project. Permit application forms can be obtained from DAQ's Web site. Refer to http://www.udot.utah.gov/go/standardsreferences.

Utah Division of Air Quality
195 North 1950 West
PO Box 144820
Salt Lake City, UT 84116
Phone: (801) 536-4000
Fax: (801) 536-4099

C. Do not proceed with work affecting air quality without an Air Quality Approval Order, Notice of Intent to Approve letter, or a Temporary Approval Order for the project, process, or equipment to be used.

## 1.19 GRATUITIES

A. Do not extend any loan, gratuity, or gift of money in any form whatsoever to any employee or officer of the Department; nor rent or purchase any equipment or materials from any employee or officer of the Department. Before payment of the final estimate will be made, execute and furnish the Department an affidavit certifying compliance with these provisions of the Contract.

B. Comply with all applicable sections of the Utah Public Officers' and Employees' Ethics Act, Utah Code Procurement Code, Utah Code §§ 63G-6a-101 et seq., both of which regulate gifts to State officers and employees.

END OF SECTION

**Supplemental Specification**
**2017 Standard Specification Book**

**SECTION 01355M**

# ENVIRONMENTAL COMPLIANCE

**Delete Article 1.3 and replace with the following:**

## 1.3 REFERENCES

A. American National Standards Institute (ANSI)

B. Clean Water Act

C. Code of Federal Regulations (CFR)

D. Rivers and Harbors Act

E. U.S. Environmental Protection Agency (EPA) Regulations

F. Utah Administrative Code (UAC)

G. Utah Department of Environmental Quality (DEQ) Regulations

H. Utah Pollutant Discharge Elimination System, Utah Construction General Permit (UCGP) and UDOT Municipal Separate Storm Sewer System (MS4) Permit

I. Utah State Stream Alteration Program

**Delete Article 1.4 and replace with the following:**

## 1.4 DEFINITIONS

A. Fugitive Dust – Small particles originating primarily from soil that are suspended in the air by the wind and by human activities

**Delete Article 1.5 and replace with the following:**

## 1.5 SUBMITTALS

A. Stormwater Pollution Prevention Plan (SWPPP) for approval on projects with one or more acres of soil disturbance.

B. Municipal Separate Storm Sewer System (MS4) Compliance Plan for approval on projects with less than one acre of soil disturbance.

C. Signed copy of the Notice of Intent (NOI) for information.

D. Signed copy of the Notice of Termination (NOT) for information.

E. UDOT Environmental Control Supervisor (ECS) Certificate of Training for information.

F. Fugitive Dust Control Plan for information.

G. Documentation of environmental clearances for areas not previously cleared for review.

**Delete Article 3.1 and replace with the following:**

## 3.1 HAZARDOUS WASTE

A. Suspend work immediately in an area if abnormal conditions are encountered or exposed during construction that indicates the presence of a hazardous waste.
   1. Notify the Engineer.

B. Do the following if a waste discovered or spilled on-site is considered hazardous according to the reportable quantity (RQ) limits identified in Title 40 CFR 302.4.
   1. Take appropriate actions to minimize the threat to human health and the environment.
   2. Contact the Engineer and send notice if waste found on-site is considered hazardous.
   3. Follow appropriate testing measures to determine if waste is hazardous.
   4. Notify DEQ, 24-hour Answering Service at (801) 536-4123, and the National Response Center at (800) 424-8802.
   5. Follow requirements in UAC R315.

C. Coordinate with the Engineer to initiate development of a remediation plan according to DEQ and the EPA regulations and requirements.
   1. Pay for costs to address hazardous waste discovery or spill cleanup when caused by Contractor's activities.
   2. Cost to test and remedy waste not caused by Contractor to be considered as contract change order by Engineer.

D. Complete the work required by the remediation plan before resuming operations in the affected area.

**Delete Article 3.2 and replace with the following:**

## 3.2 SPILL OF PETROLEUM-BASED PRODUCT AND USED OIL

A. Contact the Engineer if a spill occurs that exceeds 25 gallons, or that poses a potential threat to human health or the environment, such as discharging to groundwater, surface water, or a storm drain.
   1. Send notice following the discovery of the spill.
   2. Notify DEQ, 24-hour Answering Service, at (801) 536-4123.
   3. Coordinate with the Engineer to develop a remediation plan for spilled used oil or petroleum-based product according to UAC R315-15-8 and R315-15-9.

B. Cleanup petroleum-based or used oil product when caused by Contractor's activities.

**Delete Article 3.3 and replace with the following:**

## 3.3 WATER RESOURCE PERMITS

A. Comply with the Utah State Stream Alteration Program.

B. Comply with Section 10 of the Rivers and Harbors Act.

C. Comply with Section 404 of the Clean Water Act.

D. Comply with the National Flood Insurance Program for a project within a Special Flood Hazard Area (SFHA), as defined by the Federal Emergency Management Agency (FEMA).

**Delete Article 3.4 and replace with the following:**

## 3.4 OPEN BURNING

A. Do not conduct open burning within the site of work without approval from the Utah Department of Air Quality (DAQ).

**Delete Articles 3.6, 3.7, 3.8 and 3.9 and replace with the following:**

## 3.6 ENVIRONMENTAL CLEARANCE BY THE CONTRACTOR

A. Obtain authorization before starting any ground disturbing activity not previously cleared by the Department such as wasting project-generated material, excavating borrow material, locating equipment, storage areas, office sites, utility lines, or holding ponds.
   1. Cultural and Paleontological – Perform and provide a cultural survey as determined by the Engineer to verify no cultural or paleontological resources are affected by the activity.
   2. Threatened or Endangered Species – Perform and provide a wildlife survey as determined by the Engineer to verify no threatened or endangered or other sensitive species are affected by the activity.
   3. Federal and State regulated waters – Provide documentation as determined by the Engineer to verify that no Waters of the United States and State of Utah waters are impacted by the activity.
   4. FEMA Floodplains – Provide documentation as determined by the Engineer to verify no FEMA Special Flood Hazard Areas (SFHA) are impacted by the activity.
   5. UCGP – Provide a separate SWPPP for UCGP compliance as determined by the Engineer when disturbing more than one acre of soil off the project site.

B. The Contractor is responsible for costs of pursuing and obtaining clearances for areas not previously cleared and is not entitled to time extension for delays encountered in obtaining these clearances.

C. Environmental clearances are required regardless of the property ownership.

## 3.7 DISCOVERY OF HISTORICAL, ARCHAEOLOGICAL, OR PALEONTOLOGICAL OBJECTS, FEATURES, SITES, OR HUMAN REMAINS

A. Suspend work within the vicinity if historical, archaeological or paleontological objects, features, sites or human remains are discovered during construction:
   1. Provide a 100 ft minimum buffer around the perimeter of the discovery.
   2. Protect the discovery area.
   3. Contact the Engineer and send notice of the nature and exact location of the discovery.
   4. Provide written documentation to the Engineer within two calendar days of discovery.

B. Do not recommence work within the area of discovery until the Engineer provides written notice.

## 3.8 STORMWATER MANAGEMENT COMPLIANCE

A. Comply with UCGP requirements for projects with one or more acres of soil disturbances (clearing, grading or excavating).
   1. Designate an individual, other than the Superintendent, as the Environmental Control Supervisor (ECS) with the following responsibilities:
      a. Maintain current certifications for UDOT Environmental Control Supervisor training.
      b. Coordinate with the Engineer regarding UCGP requirements and environmental commitments.
      c. Manage implementation, modification and record keeping of the project SWPPP.
      d. Supervise the installation, maintenance and removal of Best Management Practices (BMPs).
      e. Conduct SWPPP inspections.
      f. Be available 24 hours a day, seven days a week, and be on-site within a reasonable amount of time from notification as determined by the Engineer.
   2. Complete the draft SWPPP for the project.
   3. Complete the Notice of Intent (NOI) to the Utah Division of Water Quality (DWQ), after the SWPPP has been signed by the Engineer.
   4. Conduct SWPPP inspections at least once a week and within 24 hours following a storm event with a total rainfall amount of ½ inch or greater once earth-disturbing activities have begun.
   5. Coordinate with the Engineer to determine if the project has met UCGP requirements before submitting the Notice of Termination (NOT) to DWQ.

B. Comply with the UDOT MS4 Permit for projects with less than one acre of soil disturbances (clearing, grading or excavating).
   1. Coordinate with the Engineer regarding MS4 permit requirements and environmental commitments.
   2. Obtain approved MS4 Compliance Plan before start of construction activities.
   3. Install, maintain, and remove Best Management Practices (BMPs) as required in the site of work.

C. Implement the following Pollution Prevention and Good Housekeeping Practices:
   1. Concrete Washout
      a. Provide a watertight container on-site before concrete placement activities begin and where concrete trucks, tools and equipment are to be washed.
         1). Size the container to prevent overflows.
         2). Do not place within 50 feet of storm drain inlets, open ditches or watercourses.
      b. Remove and properly dispose of concrete waste and washout water.
   2. All debris, such as mud, dirt, gravel and other material collected from street sweeping or storm drain inlets and pipe cleaning to be stored and contained within impervious area until they are properly disposed of.
   3. Prevent material from entering into stormwater conveyances, such as storm drain inlets and drainage pipes, ditches, natural waterways, and wetlands.
   4. Maintain site of work in a clean condition through proper disposal and clean-up of sanitary waste, trash, spills, chemicals, and other waste materials.
   5. Use drip pans and absorbent materials to mitigate discharges from leaking equipment until repairs can be made. Maintain a spill kit within the site of work.

**Supplemental Specification**
**2017 Standard Specification Book**

**SECTION 02216**

# TEST-HOLE UTILITY

**Add Section 02216**

## PART 1 GENERAL

### 1.1 SECTION INCLUDES

A. Procedure for test-hole operations to identify and locate utilities during construction activities.

### 1.2 RELATED SECTIONS

A. Section 01721: Survey

### 1.3 REFERENCES

A. CI/ASCE 38-02: Standard Guideline for the Collection and Depiction of Existing Subsurface Utility Data

### 1.4 DEFINITIONS **Not Used**

### 1.5 SUBMITTALS

A. Provide records to the Engineer within 5 working days of test-hole operations.

## PART 2 PRODUCTS **Not Used**

## PART 3 EXECUTION

### 3.1 PREPARATION

A. Identify locations of possible conflicts including excavation, pipe culvert extensions, catch basins, and other construction elements to test-hole as requested by the Contractor and as determined by the Engineer.

B. Coordinate and cooperate with the utility companies to protect their facilities.

C. Request permission to test-hole from the Engineer at least 24 hours prior to excavation.

## 3.2 EXPLORATION

A. Use vacuum excavation or other methods that protect the integrity of the utility.

B. Perform test-hole operations to provide Quality Level A per CI/ASCE 38-02.

## 3.3 RECORDS

A. Measure and record utility location according to CI/ASCE 38-02.
   1. Measure and record horizontal and vertical location in project coordinate system per Standard Specification 01721.
   2. Measure and record depth from grade, outside diameter, orientation, material composition, and configuration of non-encased, multi-conduit systems.

## 3.4 BACKFILL AND RESTORATION

A. Backfill test-hole excavation according to utility owner's specifications when outside of roadway prism.
   1. Backfill according to the most restrictive of either the Department's or the utility owner's specifications if test-hole excavation is within the roadway prism.
   2. Backfill within 24 hours or as otherwise determined.

B. Backfill test-hole excavation to the same depths and grades with equivalent or better materials of surrounding pavement or terrain.

END OF SECTION

**Supplemental Specification**
**2017 Standard Specification Book**

**SECTION 02744M**

# STONE MATRIX ASPHALT (SMA)

**Delete Article 3.3 and replace with the following:**

## 3.3 CEASE PRODUCTION

A. Cease production when any two out of three consecutive lots meet one of the following criteria:
   1. A net disincentive.
   2. Air voids averaged for each lot are less than 2.5 or greater than 4.5 percent.

B. Refer to Table 2 of this section.

C. Submit a corrective action plan to the Engineer before production continues indicating the changes in production procedures that will be implemented to correct the deficiencies.
   1. Address the specific issues contributing to the cease production directive.
   2. The Engineer must approve the revised plan before production continues.

D. The Engineer may require a new mix design.

**Supplemental Specification**
**2017 Standard Specification Book**

**SECTION 02822M**

# RIGHT-OF-WAY FENCE AND GATE

**Delete Article 3.2 paragraph H and replace with the following:**

H. Install Rail end caps and set screw, bolt metal braces to the metal posts.

**Supplemental Specification**
**2017 Standard Specification Book**

**SECTION 03211M**

# REINFORCING STEEL AND WELDED WIRE

**Delete Paragraphs 1.3 B, 1.3 C and 1.3 D and replace with the following:**

B. AASHTO M 111: Zinc (Hot-Dip Galvanized) Coatings on Iron and Steel Products

C. AASHTO M 235: Epoxy Resin Adhesives

D. AASHTO M 336: Steel Wire and Welded Wire, Plain and Deformed, for Concrete Reinforcement

**Delete Article 2.2 and replace with the following:**

## 2.2 WIRE AND WIRE REINFORCEMENT

A. Refer to AASHTO M 336 for cold drawn steel wire.

B. Refer to AASHTO M 336 for steel welded wire reinforcement.

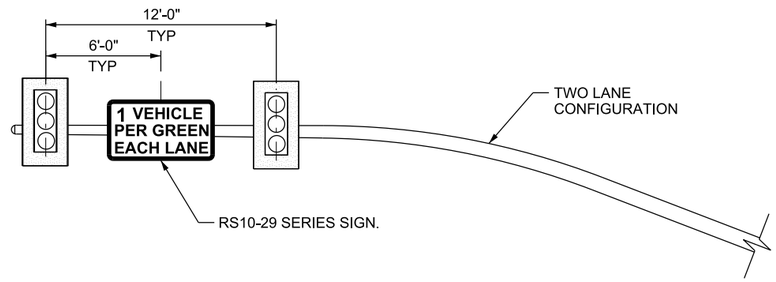


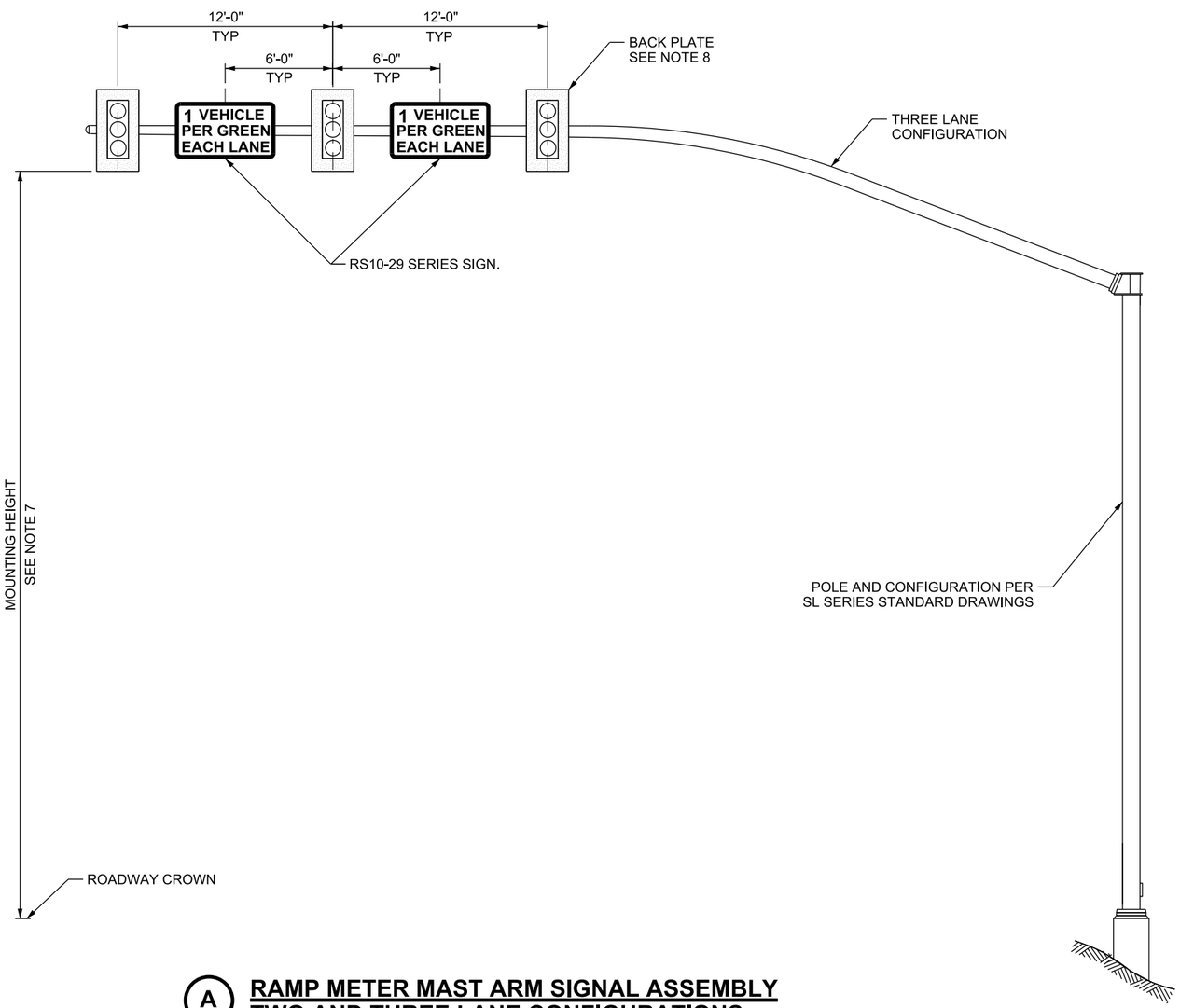


## (A) RAMP METER MAST ARM SIGNAL ASSEMBLY TWO AND THREE LANE CONFIGURATIONS

**NOTES:**

1. SIGNAL POLE, MAST ARM AND LUMINAIRE EXTENSION ARE STATE FURNISHED ITEMS.
2. ALIGN ALL SIGNAL HEADS WITH CENTER OF LANES.
3. SEE STD DWG SL 2A FOR MAST ARM SIGNAL HEAD MOUNTING.
4. USE SEPARATE SEVEN CONDUCTOR CABLE FOR EACH SIGNAL HEAD. SEE STD DWG SL 2D.
5. USE TYPE I SIGNAL HEAD (12 INCH) WITH BACK PLATE ON RAMP METER MAST ARM. SEE STD DWG SL 6. ALL BACK PLATES TO BE SOLID BLACK, RETROREFLECTIVE TAPE WILL NOT BE ALLOWED.
6. VERIFY THE RS 10 - 29 SERIES SIGN WITH TRAFFIC MANAGEMENT DIVISION.
7. CLEARANCE FROM CROWN APPLIES TO ALL SIGNAL HEADS ON MAST ARM. REFER TO SL SERIES STANDARD DRAWINGS AND STANDARD SPECIFICATION 02892.
8. DO NOT PLACE RETRO REFLECTIVE TAPE ON FLASHING BEACON BACK PLATES.

SUPPLEMENTAL DRAWING

| NO. | DATE | APPR. | REMARKS |
|---|---|---|---|
| 1 | 2/28/19 | CGW | REMOVED 4TH AND 5TH NOTES. DIM. TO EDGE OF TRAVEL WAY. REVISED NOTE 7 |

**UTAH DEPARTMENT OF TRANSPORTATION**
STANDARD DRAWINGS FOR ROAD AND BRIDGE CONSTRUCTION
SALT LAKE CITY, UTAH

RECOMMENDED FOR APPROVAL — FEB. 28, 2019 DATE

CHAIRMAN STANDARDS COMMITTEE APPROVED — FEB. 28, 2019 DATE

DEPUTY DIRECTOR

STANDARD DRAWING TITLE
RAMP METER
SIGNAL HEAD DETAILS

STD. DWG. NO.
AT 2

DGN File:L:\Standard.Drawings\Imperial\2017 Approved_Supplemental.Issues\Supp8Approved Feb - 2019\Backup\AT02.dgn
04-MAR-2019

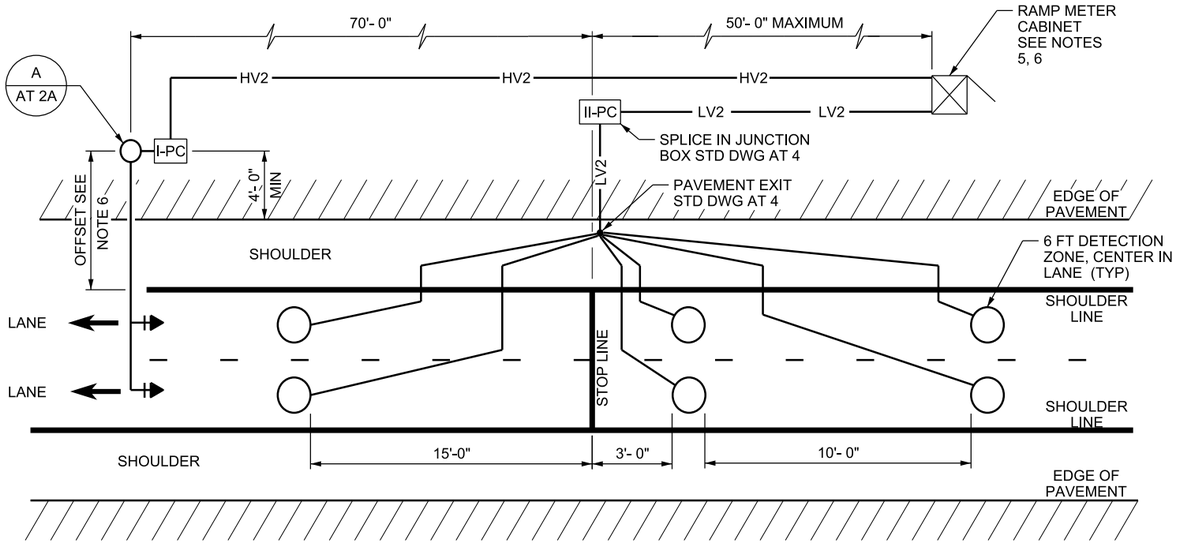


## (A) TWO LANE RAMP METER DETECTION ZONE LAYOUT DETAIL

(NOT TO SCALE)

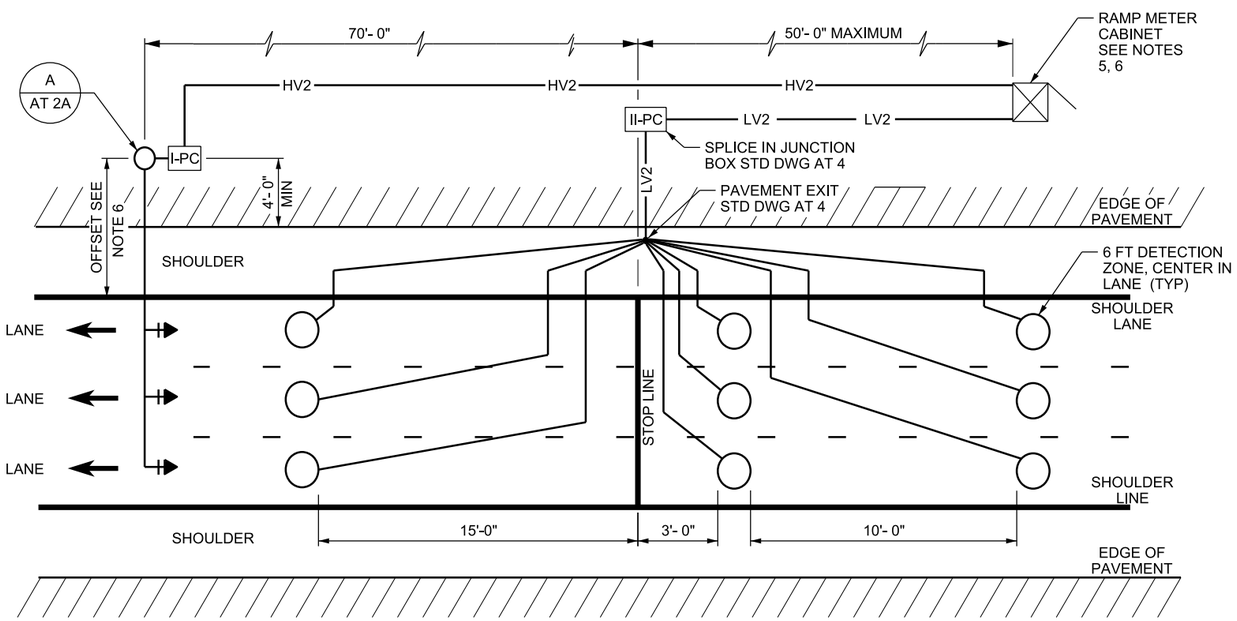


## (B) THREE LANE RAMP METER DETECTION ZONE LAYOUT DETAIL

(NOT TO SCALE)

**NOTES:**

1. PLACE JUNCTION BOXES ACCORDING TO STD DWG AT 7A. REFER TO STD DWG AT 4 FOR DETECTION.
2. USE PREFORMED LOOPS UNDER NEW PAVEMENT. PREFORMED LOOPS ARE TO BE PLACED PRIOR TO PAVING. SAW CUTTING NEW PAVEMENT WILL NOT BE PERMITTED.
3. TAG EACH LOOP WIRE IN EACH JUNCTION BOX, BEGINNING WITH FIRST LOOP IN LANE CLOSEST TO LEFT SHOULDER.
4. SEE STD DWG AT 5 FOR DETECTOR NUMBERING SCHEME.
5. PLACE CABINET ON RIGHT SIDE OF TRAFFIC UNLESS SPACE IS UNAVAILABLE. CABINET ON LEFT SIDE MUST MEET CLEAR ZONE REQUIREMENTS FOR MAINLINE AND RAMP.
6. ORIENT CABINET SO THAT ELECTRONICS AND SIGNAL HEAD CAN BE VIEWED AT THE SAME TIME.
7. BARRIER BREAK FOR CABINET ACCESS REQUIRED, CONSTRUCT ACCORDING TO PROJECT DOCUMENTS.
8. ENFORCEMENT PULL OUT REQUIRED, CONSTRUCT ACCORDING TO PROJECT DOCUMENTS.
9. SEE PLAN SHEETS FOR DETECTOR LOOP LOCATION. ADJUST THE LOOP PLACEMENT FORWARD OR BACKWARD IN THE SHORTEST DIRECTION FROM THE OPTIMUM POSITION IF A DETECTOR LOOP LOCATION IS IN CONFLICT WITH A MANHOLE, WATER VALVE, OR PAVEMENT EXPANSION JOINT.

SUPPLEMENTAL DRAWING

| NO. | DATE | APPR. | REMARKS |
|---|---|---|---|
| 1 | 2/28/19 | CGW | REMOVED 5TH AND 6TH NOTES-REVISED NOTES 7 AND 8 |

**UTAH DEPARTMENT OF TRANSPORTATION**
STANDARD DRAWINGS FOR ROAD AND BRIDGE CONSTRUCTION
SALT LAKE CITY, UTAH

RECOMMENDED FOR APPROVAL — FEB. 28, 2019 DATE
CHAIRMAN STANDARDS CC APPROVED — FEB. 28, 2019 DATE
DEPUTY DIRECTOR

RAMP METER DETECTION LAYOUT AND CABINET PLACEMENT
STANDARD DRAWING TITLE

STD. DWG. NO.
AT 3

DGN File:L:\Standard.Drawings\Imperial\2017 Approved_Supplemental.Issues\Supp8Approved Feb - 2019\Backup\AT03.dgn
04-MAR-2019

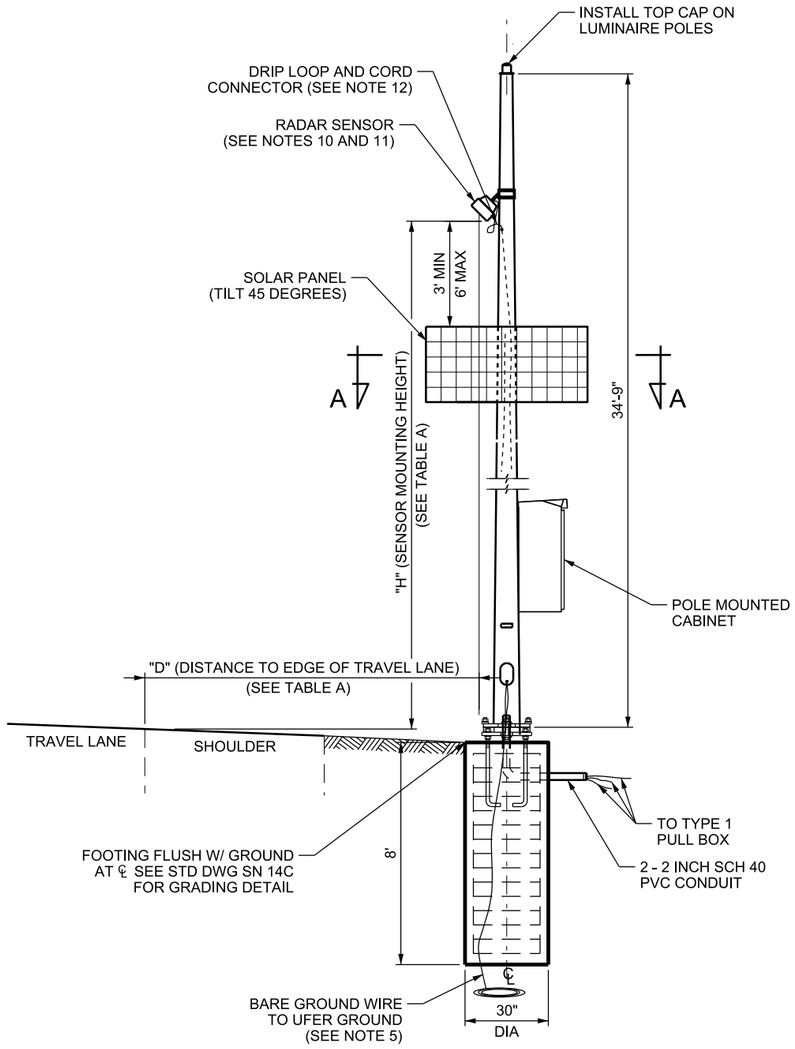


## A SOLAR TRAFFIC COUNTING STATION LAYOUT

REFER TO STD DWG SL 11 FOR FOUNDATION DETAILS
REFER TO STD DWG SL 12 FOR SLIP BASE DETAILS

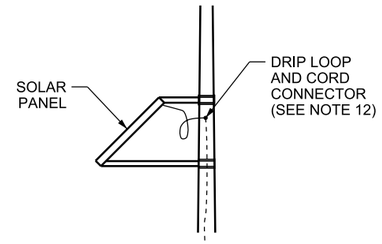


## SECTION A-A

SEE NOTES 1 AND 2

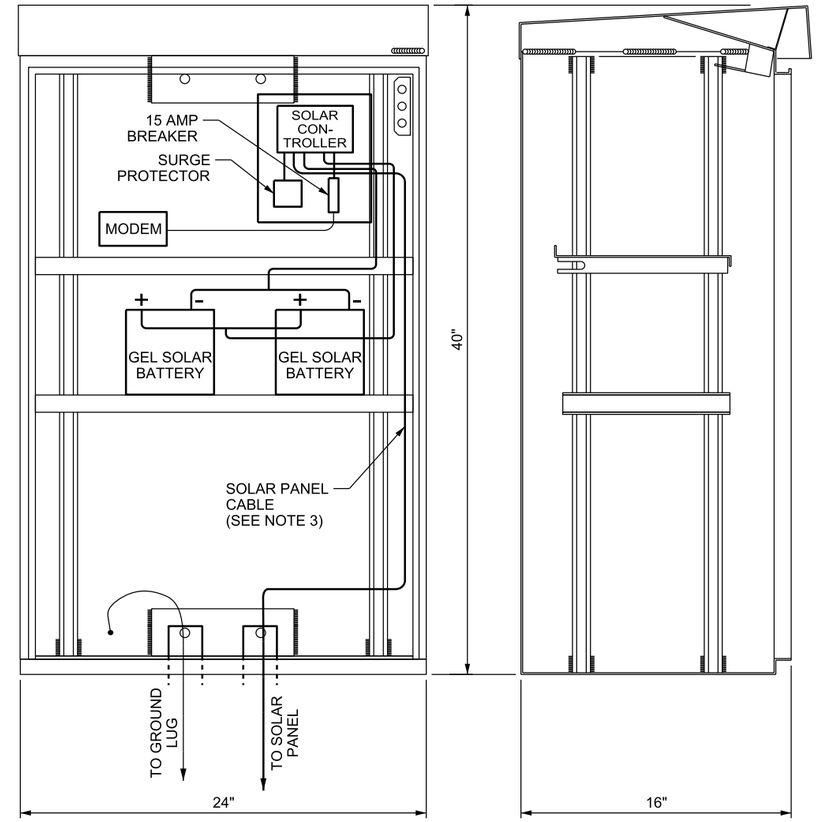


## FRONT VIEW

## SIDE VIEW

## C POLE MOUNTED CABINET DETAIL

REFER TO STD DWG AT-11C FOR MOUNTING DETAILS

| OPTIMAL POLE & RADAR SENSOR LOCATION (FT) | |
|---|---|
| POLE "D" | 25 TO 35 |
| SENSOR "H" | 26 TO 30 |

## TABLE A

SEE NOTE 7

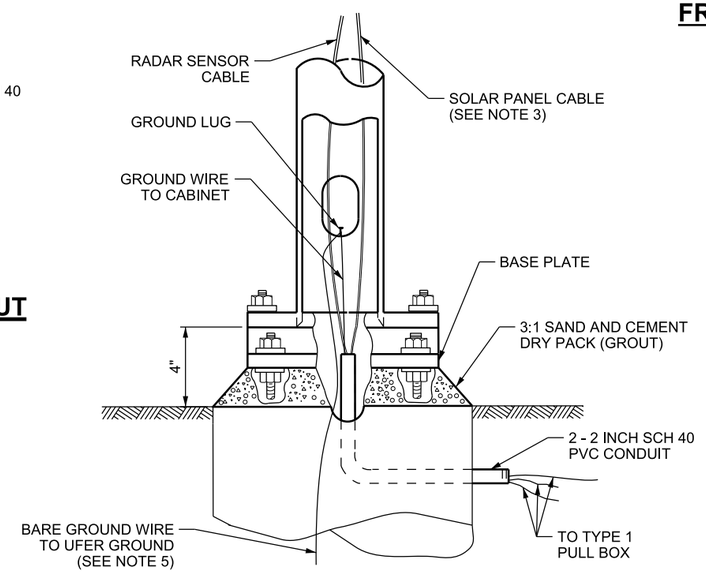


## B TYPICAL ELECTRICAL CONNECTIONS

REFER TO STD DWG SL 11 FOR ANCHOR BOLT DETAILS
REFER TO STD DWG SL 12 FOR SLIP BASE DETAILS

**NOTES:**

1. ORIENT SOLAR PANEL TO FACE DUE SOUTH.
2. ADJUST SOLAR PANEL MOUNTING HEIGHT FROM SENSOR DETECTION AREA IF RADAR SENSOR IS FACING SOUTH. CONTACT UDOT TRAFFIC COUNTING SHOP THROUGH THE ENGINEER PRIOR TO CONSTRUCTION.
3. USE 12 AWG TYPE TC THHN-THWN-2 CONDUCTORS, 90 C 600V SUN RESISTANT DIRECT BURY SOLAR PANEL CABLE.
4. USE EPOXY COATED REBAR AND CLASS AA(AE) CONCRETE FOR FOUNDATIONS.
5. USE CONCRETE ENCASED ELECTRODE PER NEC 250.52.A.3.2 FOR GROUNDING (UFER GROUND).
6. CONTACT UDOT TRAFFIC COUNTING SHOP AT (801) 965-4092 FOR COUNTING MACHINE SPECIFICATIONS.
7. VERIFY POLE AND CONTROLLER CABINET LOCATION AND RADAR SENSOR HEIGHT.
8. PROTECT WITH AN APPROVED STANDARD BARRIER OR GUARDRAIL SYSTEM WHEN POLE PLACEMENT IS WITHIN CLEAR ZONE.
9. STATE FURNISHED ITEMS: SLIP BASE POLE, ANCHOR BOLTS, RADAR SENSOR, SOLAR PANEL AND MOUNTING BRACKET, CONTROLLER CABINET AND ALL INTERNAL COMPONENTS EXCLUDING SOLAR PANEL CABLE.
10. AIM RADAR SENSOR DURING FINAL INSPECTION.
11. REFER TO STD DWG AT 11B, DETAIL B FOR MOUNT ASSEMBLY DETAILS.
12. SUPPLY AND INSTALL CORD CONNECTOR. SIZE APPROPRIATELY FOR WIRE.

SUPPLEMENTAL DRAWING

| NO. | DATE | APPR. | REMARKS |
|---|---|---|---|
| 1 | 2/28/19 | CGW | REPLACED GROUND WITH POLE MOUNTED CABINET. ADDED SENSOR MOUNTING TABLE |

**UTAH DEPARTMENT OF TRANSPORTATION**
STANDARD DRAWINGS FOR ROAD AND BRIDGE CONSTRUCTION
SALT LAKE CITY, UTAH

RECOMMENDED FOR APPROV — FEB. 28, 2019 DATE
CHAIRMAN STANDARDS COMMITTEE APPROVED — FEB. 28, 2019 DATE
DEPUTY DIRECTOR

STANDARD DRAWING TITLE: SOLAR TRAFFIC COUNTING STATION

STD. DWG. NO. AT 14

DGN File:L:\Standard_Drawings\Imperial\2017 Approved_Supplemental_Issues\SuppApproved Feb - 2019\Backup1\AT14.dgn
04-MAR-2019

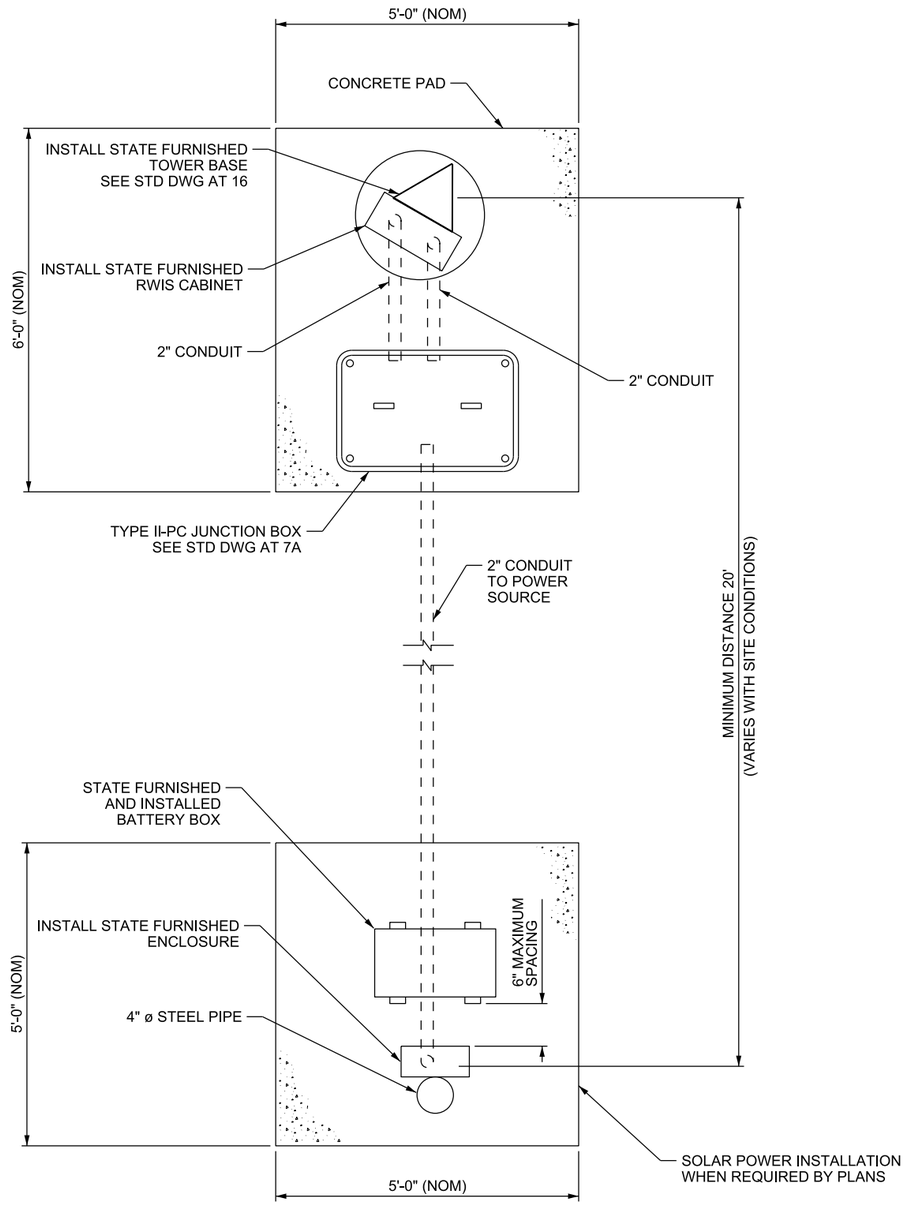


**A** **RWIS SITE LAYOUT (PLAN VIEW)**

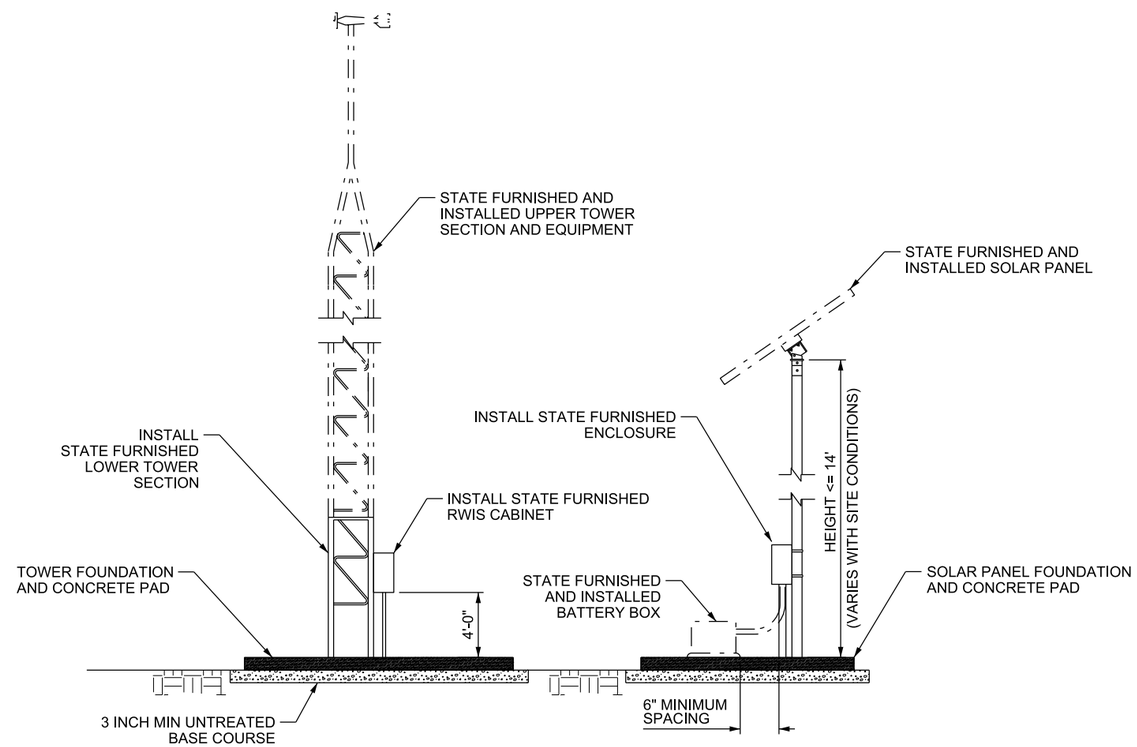


**B** **RWIS TOWER AND SOLAR PANEL (PROFILE VIEW)**

**LEGEND**

- - — - — FUTURE EQUIPMENT BY THE DEPARTMENT

**NOTES:**

1. PAD DIMENSIONS ARE NOMINAL. SEE PLANS FOR SPECIFIC SITE VARIATIONS.

SUPPLEMENTAL DRAWING

| NO. | DATE | APPR. | REMARKS |
|---|---|---|---|
| 1 | 2/28/19 | CGW | REMOVED 1ST NOTE AND REFERENCES TO STD DWG AT 11C |

**UTAH DEPARTMENT OF TRANSPORTATION**

STANDARD DRAWINGS FOR ROAD AND BRIDGE CONSTRUCTION
SALT LAKE CITY, UTAH

RECOMMENDED FOR APPROV — FEB. 28, 2019 DATE

CHAIRMAN STANDARDS COMMITTEE APPROVED — FEB. 28, 2019 DATE

DEPUTY DIRECTOR

RWIS SITE AND FOUNDATION DETAILS

STANDARD DRAWING TITLE

STD. DWG. NO.

AT 15

DGN File:L:\Standard_Drawings\Imperial\2017 Approved_Supplemental_Issues\Supp8Approved Feb - 2019\Backup\AT15.dgn
04-MAR-2019

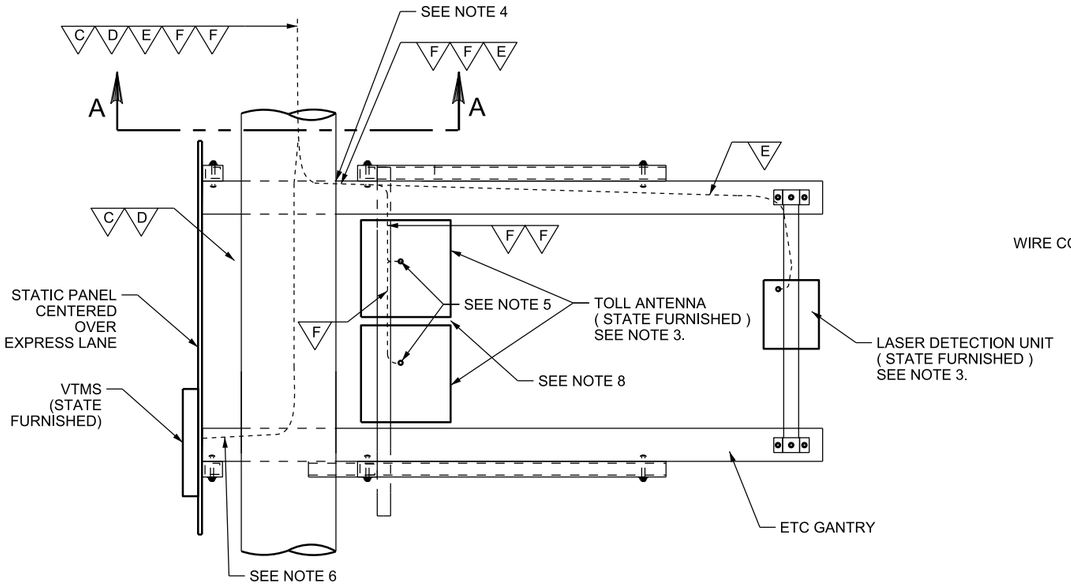


## (A) ETC GANTRY EQUIPMENT LOCATION DETAIL

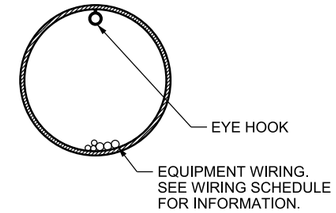


## SECTION A-A

WIRE CONFIGURATION THROUGH STRUCTURE TO ETC EQUIPMENT / VTMS

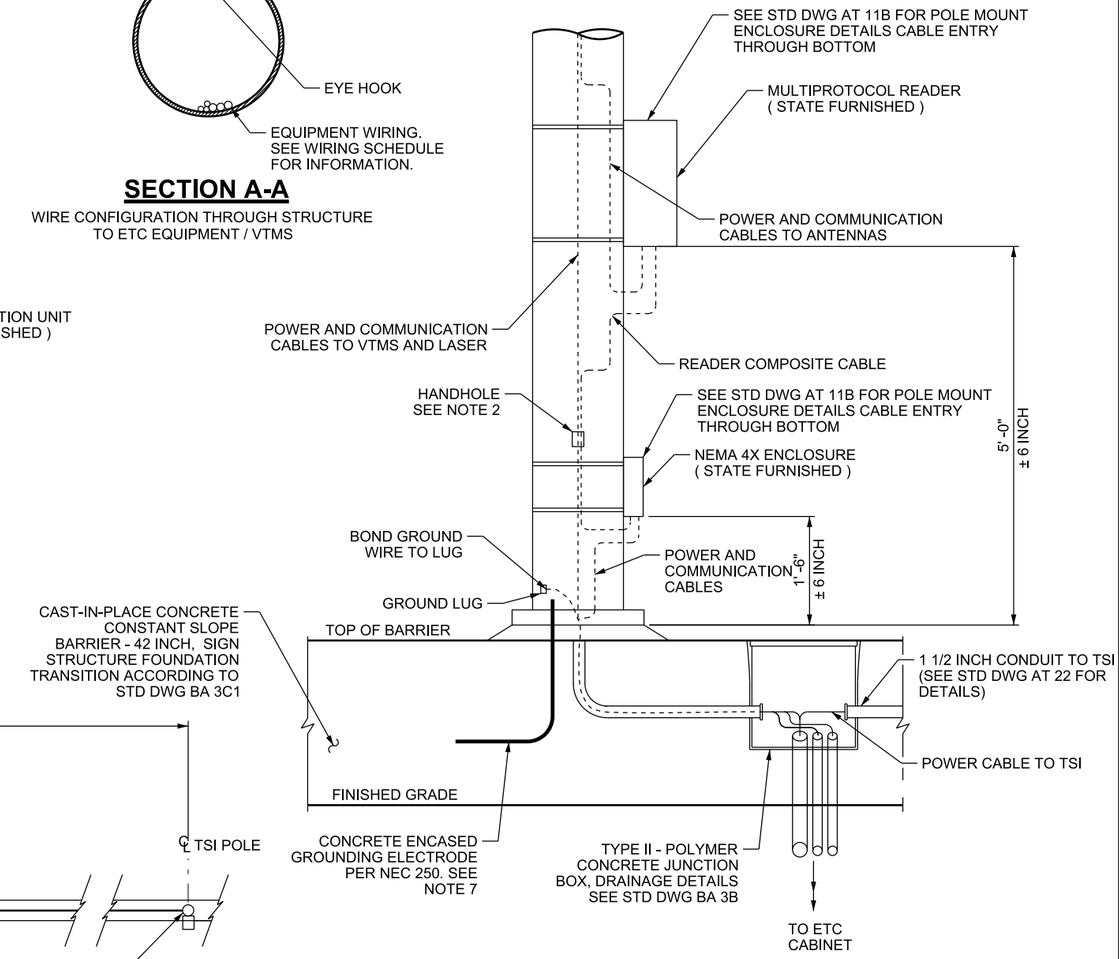


## SECTION B-B

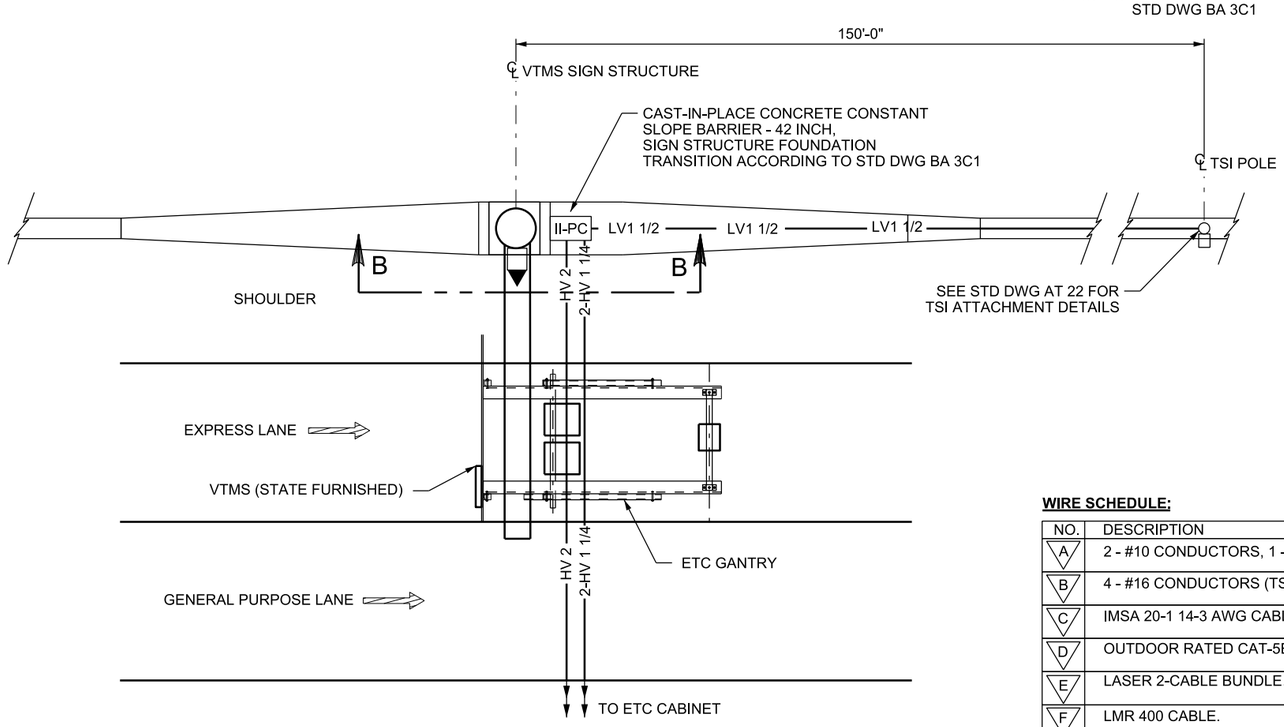


## (C) ETC PLAZA DETAIL

**WIRE SCHEDULE:**

| NO. | DESCRIPTION |
|---|---|
| A | 2 - #10 CONDUCTORS, 1 - #10 EQUIPMENT GROUND. |
| B | 4 - #16 CONDUCTORS (TSI 2A-1604). |
| C | IMSA 20-1 14-3 AWG CABLE. |
| D | OUTDOOR RATED CAT-5E CABLE. |
| E | LASER 2-CABLE BUNDLE. (STATE FURNISHED) |
| F | LMR 400 CABLE. |
| G | READER COMPOSITE CABLE (STATE FURNISHED) |
| H | 6 SMFO PRETERMINATED DROP CABLE. |

**NOTES:**

1. SEE STRUCTURE DRAWINGS FOR ETC GANTRY DIMENSIONS AND DETAILS.
2. PLACE NEMA 4X ENCLOSURE TO AVOID CONFLICT WITH HANDHOLE.
3. SEE STD DWG AT 22 FOR GANTRY EQUIPMENT ATTACHMENT DETAILS.
4. USE CABLE EXIT STRAIN RELIEF, 1½ INCH WITH SOLID INSERT OR EQUIVALENT. DRILL HOLES IN INSERT TO CABLE SIZE.
5. USE CABLE ENTRY STRAIN RELIEF, 5 INCH HEAT SHRINK TUBING WITH GLUE. APPLY WITH HEAT GUN ONLY.
6. USE ¾ INCH LIQUID TIGHT FLEXIBLE METAL CONDUIT, TYPE LFMC BETWEEN STRUCTURE AND VTMS.
7. REFER TO STANDARD SPECIFICATION 16530 FOR CONCRETE ENCASED GROUNDING ELECTRODE REQUIREMENTS.
8. GAP BETWEEN ANTENNAS IS 6 INCHES.

SUPPLEMENTAL DRAWING

| NO. | DATE | APPR. | REMARKS |
|---|---|---|---|
| 2 | 2/28/19 | CGW | ADDED REFERENCE TO STD DWG BA 3B TO SECTION B-B |
| 1 | 5/15/18 | CGW | SPECIFICATION REFERENCE IN NOTE 7 UPDATED. |

**UTAH DEPARTMENT OF TRANSPORTATION**
STANDARD DRAWINGS FOR ROAD AND BRIDGE CONSTRUCTION
SALT LAKE CITY, UTAH

RECOMMENDED FOR APPROVAL — FEB. 28, 2019 DATE
CHAIRMAN STANDARDS COMMITTEE APPROVED — FEB. 28, 2019 DATE
DEPUTY DIRECTOR

ELECTRONIC TOLL LANES CONTROL SYSTEMS ETC GANTRY
STANDARD DRAWING TITLE

STD. DWG. NO.
AT 21

DGN File: L:\Standard Drawings\Imperial\2017 Approved_Supplemental Issues\Sup8Approved Feb - 2019\Backup1\AT21.dgn
04-MAR-2019

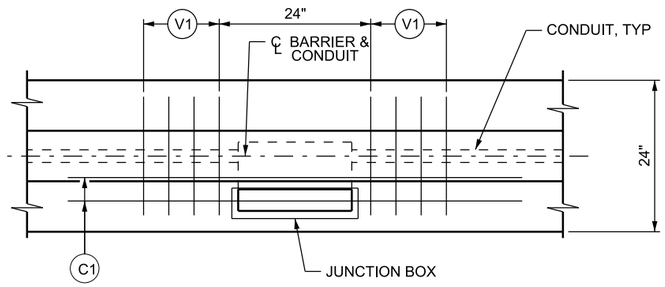


**PLAN**

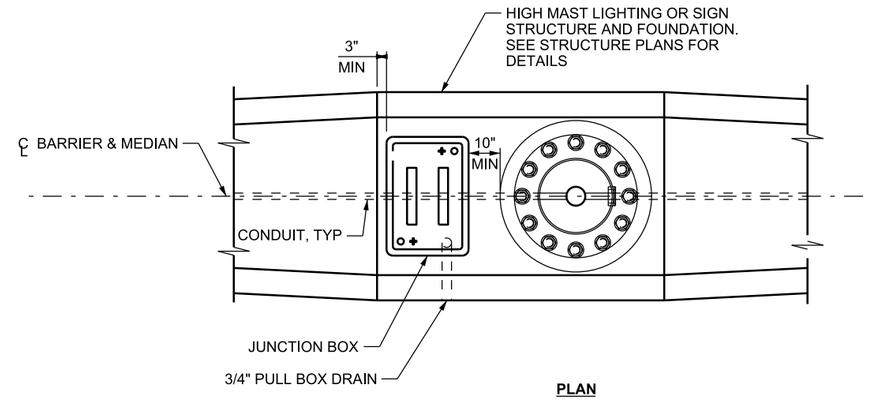


**PLAN**

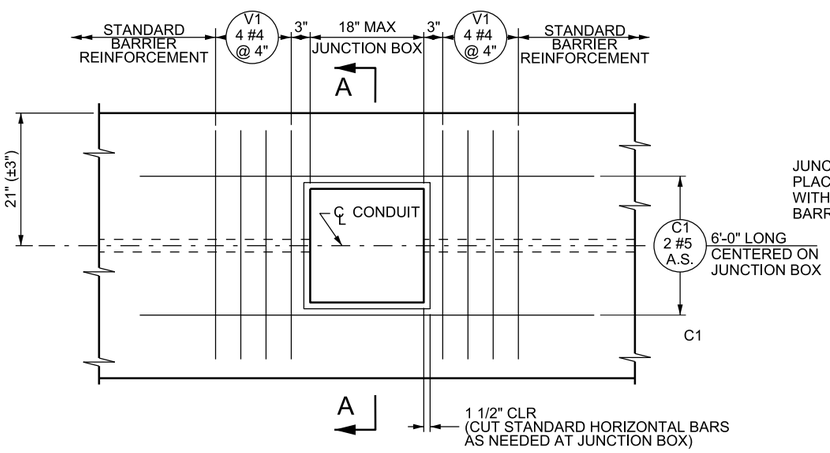


**ELEVATION**

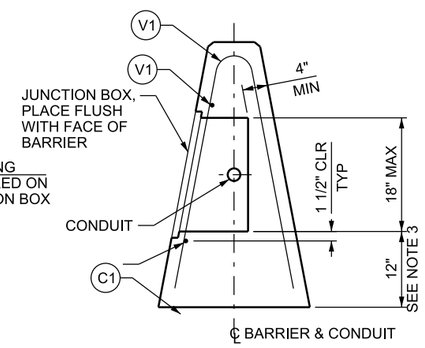


**SECTION A-A**

## MEDIAN BARRIER CONDUIT

STANDARD REINFORCEMENT NOT SHOWN

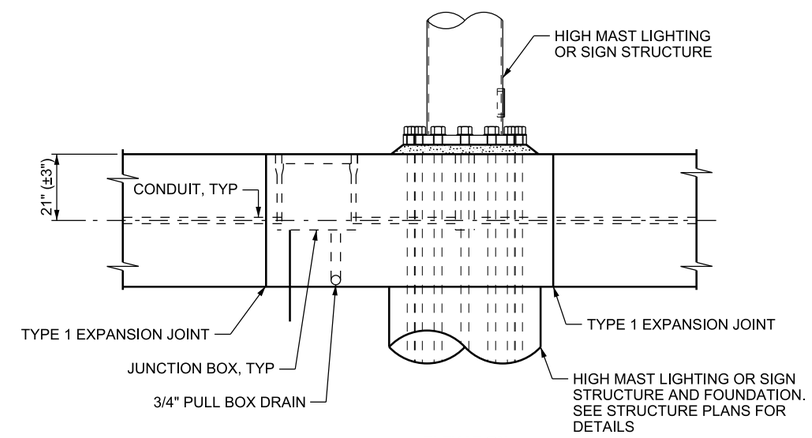


**ELEVATION**

## MEDIAN BARRIER CONDUIT AT SIGN OR LIGHT STRUCTURE

**DESIGN-ONLY NOTES:**

A. SEE STD DWG BA 1B THROUGH BA 1D FOR TYPICAL LAYOUT REQUIREMENTS.

**NOTES:**

1. SEE STD DWG BA 1A1 FOR GENERAL NOTES.
2. INSTALL ELECTRICAL AND ATMS CONDUITS, JUNCTION BOXES, AND PULL BOXES PER CONTRACT DRAWINGS.
3. INCREASE HEIGHT TO ACCOUNT FOR STEPPED MEDIAN. MAINTAIN 12 INCHES TO TOP OF PAVEMENT ON THE HIGHEST SIDE.

SUPPLEMENTAL DRAWING

REVISIONS

| NO. | DATE | APPR. | REMARKS |
|---|---|---|---|
| 1 | 2/28/2019 | SDD | ADDED 3/4" PULL BOX DRAIN CALL OUT. |

**UTAH DEPARTMENT OF TRANSPORTATION**

STANDARD DRAWINGS FOR ROAD AND BRIDGE CONSTRUCTION

SALT LAKE CITY, UTAH

RECOMMENDED FOR APPROV. — FEB.28, 2019 DATE

CHAIRMAN STANDARDS COMMITTEE APPROVED — FEB.28, 2019 DATE

DEPUTY DIRECTOR — DATE

STANDARD DRAWING TITLE

CAST-IN-PLACE CONCRETE CONSTANT SLOPE BARRIER - 42 INCH, ELECTRICAL DETAILS

STD. DWG. NO.

BA 3B

DGN File:L:\Standard Drawings\Imperial\2017 Approved_Supplemental Issues\Supp8Approved Feb - 2019\Backup\BA03B.dgn
04-MAR-2019

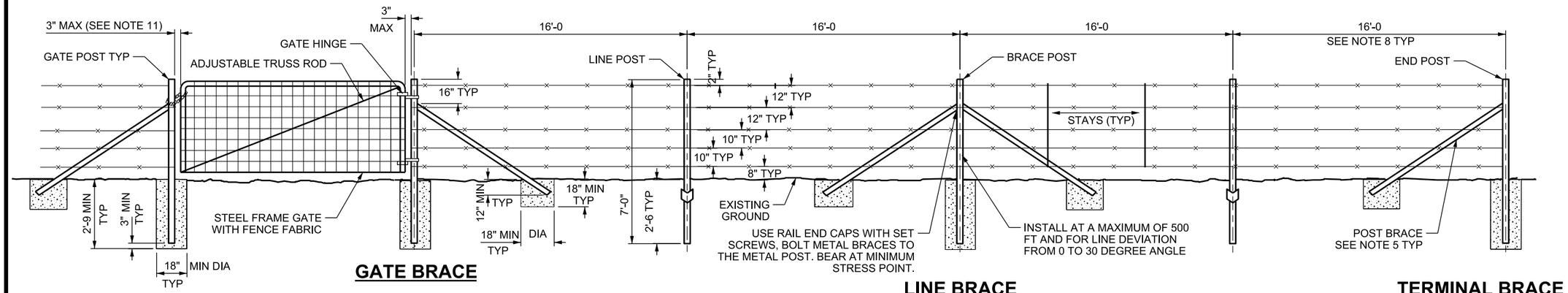


## GATE BRACE

## LINE BRACE

## TERMINAL BRACE

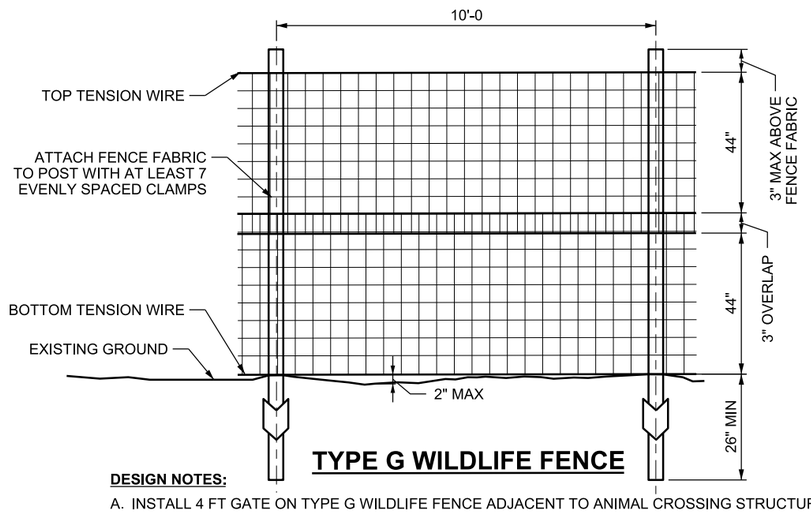


## TYPE G WILDLIFE FENCE

**DESIGN NOTES:**

A. INSTALL 4 FT GATE ON TYPE G WILDLIFE FENCE ADJACENT TO ANIMAL CROSSING STRUCTURES.

**NOTES:**

1. 3 INCH MIN OVERLAP REQUIRED AND TIE OR CLAMP TOGETHER EVERY 18 INCHES USING HOG RINGS OR OTHER TYPES OF TIES OR CLAMPS.
2. PLACE BOTTOM TENSION WIRE AND FENCE FABRIC AT EXISTING GROUND AT POSTS AND WITHIN 2 INCHES OF EXISTING GROUND BETWEEN POSTS.
3. TIE OR CLAMP BOTTOM AND TOP TENSION WIRE TO FENCE FABRIC EVERY 24 INCHES USING HOG RINGS OR OTHER TYPES OF TIES OR CLAMPS.
4. A SINGLE FENCE FABRIC MAY BE USED IF MEETS OVERALL MINIMUM DIMENSIONS.

## INSTALLATION WITH METAL POSTS

**NOTES:** (TYPE A SHOWN, ALL OTHERS SIMILAR)

1. SET GATE POST, BRACE POST, END POST, CORNER POST, AND POST BRACE IN CLASS "B" CONCRETE. SEE STD DWG FG 2B FOR CORNER BRACE DETAIL.
2. LINE POSTS FOR TYPE A, B, D, E, F & G FENCE
   A. "T", "Y", OR "U" STEEL CHANNEL SECTIONS, MINIMUM WEIGHT 1.33 LB/FT OF LENGTH OR STEEL PIPE,1.900 INCH OUTSIDE DIAMETER SCHEDULE 40 PIPE, WEIGHT 2.72 LB/FT OF LENGTH OR HIGH TENSILE TRIPLE COATED STEEL PIPE, WEIGHT 2.23 LB/FT OF LENGTH.
   B. LINE POSTS FOR TYPE A, B, D, E, & F FENCE: 7 FT LENGTH.
   C. LINE POSTS FOR TYPE G FENCE: 10 FT LENGTH.
3. BRACE POSTS, CORNER POSTS, AND END POSTS
   A. TYPE A, B, D, E, & F FENCES USE 2.5 INCH x 2.5 INCH x 0.25 INCH STEEL ANGLE, MINIMUM WEIGHT 4.10 LB/FT OR STEEL PIPE 2.375 INCH OUTSIDE DIAMETER, WEIGHT 3.65 LB/FT OR HIGH TENSILE TRIPLE COATED STEEL, 2.375 INCH OUTSIDE DIAMETER WEIGHT 3.11 LB/FT.
   B. TYPE G FENCE USE STEEL PIPE 2.375 INCH OUTSIDE DIAMETER, WEIGHT 3.65 LB/FT OR HIGH TENSILE TRIPLE COATED STEEL, 2.375 INCH OUTSIDE DIAMETER WEIGHT 3.11 LB/FT.
4. GATE POSTS
   A. GATE WIDTHS 6 FT AND LESS USE STEEL PIPE WITH OUTSIDE DIAMETER 2.375 INCH AND WEIGHT 3.65 LB/FT OR HIGH TENSILE TRIPLE COATED STEEL, 2.375 INCH OUTSIDE DIAMETER WEIGHT 3.11 LB/FT.
   B. GATE WIDTHS GREATER THAN 6 FT USE STEEL PIPE WITH OUTSIDE DIAMETER 3.50 INCH AND WEIGHT 7.58 LB/FT.
5. POST BRACES TO MATCH POST TYPE AND SIZE.
6. USE CORNER BRACE ON FENCE LINE DEVIATIONS GREATER THAN 30 DEGREE ANGLE. USE CORNER BRACE ON TYPE G FENCE WITH DEVIATIONS GREATER THAN 17 DEGREE ANGLE. SEE STD DWG FG 2B FOR CORNER BRACE DETAILS.
7. TERMINATE FENCE FABRIC AND BARBED WIRE AT EACH CORNER POST.
8. USE 10 FT SPACING IN AREAS OF FARM ANIMAL USE OR AS SHOWN.
9. SPACING AND BRACING ARE AS SHOWN IN INSTALLATION WITH METAL POST ABOVE FOR FENCE TYPES A, B, D, E AND F POST SIZE. SPACE 2 STAYS EVENLY BETWEEN EACH SET OF POSTS.
10. GATE FRAME USE STEEL PIPE 1.875 INCH OUTSIDE DIAMETER WITH WEIGHT OF 2.72 LB/FT.
11. WHERE DOUBLE GATES ARE INSTALLED PROVIDE AT LEAST A 4 INCH GAP BETWEEN GATE FRAMES TO ALLOW FOR LATCH.

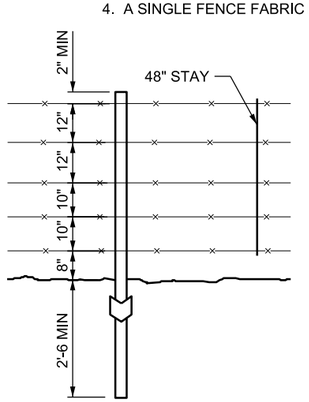


## TYPE A

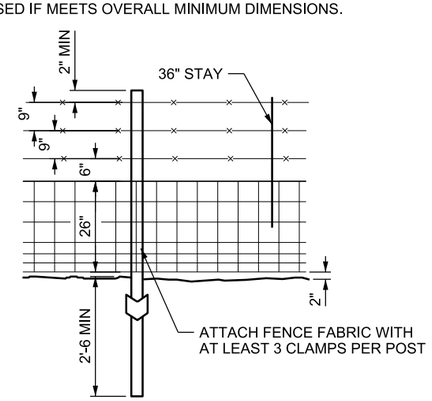


## TYPE B

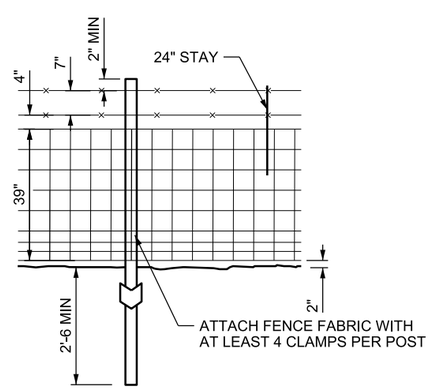


## TYPE D

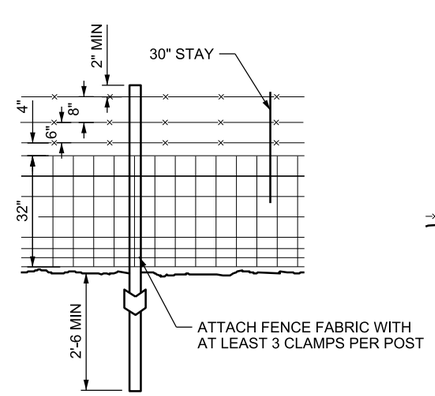


## TYPE E

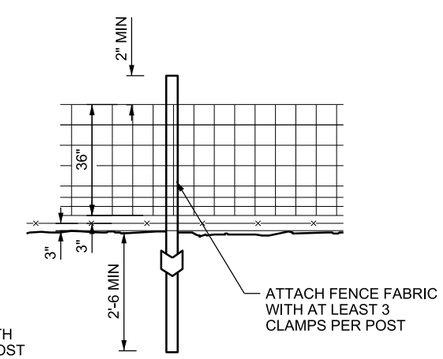


## TYPE F

TO BE INSTALLED IN DEER COUNTRY

SUPPLEMENTAL DRAWING

REVISIONS

| NO. | DATE | APPR. | REMARKS |
|---|---|---|---|
| | | | |

**UTAH DEPARTMENT OF TRANSPORTATION**
STANDARD DRAWINGS FOR ROAD AND BRIDGE CONSTRUCTION
SALT LAKE CITY, UTAH

RECOMMENDED FOR APPROVAL: FEB.28, 2019 DATE

CHAIRMAN STANDARDS COMMITTEE APPROVED: FEB.28, 2019 DATE

DEPUTY DIRECTOR

STANDARD DRAWING TITLE: RIGHT OF WAY FENCE AND GATES (METAL POST)

STD. DWG. NO. FG 2A

DGN File:L:\Standard_Drawings\Imperial\2017 Approved_Supplemental_Issues\SupplApproved Feb - 2019\Backup\FG02A.dgn
04-MAR-2019

| DIMENSION REFERENCE TABLE (PROWAG R302 - R305) | | | | |
|---|---|---|---|---|
| | ITEM | MAX. RUNNING SLOPE | MAX. CROSS SLOPE | MIN. DIMENSIONS |
| S | SIDEWALK | RD GRADE (IN ROW) 5.0% (OUT OF ROW) | 2.0% | 4 FT WIDE (i) |
| T | TURNING SPACE | 2.0% | 2.0% (iv), (v) | 4 FT X 4 FT (ii), (viii) |
| R | RAMP | 8.3% (iii) | 2.0% (iv), (v) | 4 FT WIDE (viii) |
| C | CLEAR SPACE | 5.0% (vi) | 2.0% (iv), (v) | 4 FT X 4 FT |
| | AT-GRADE ACCESS | (SEE DEFINITION) | 2.0% (iv), (v) | 4 FT WIDE |
| | CROSSWALK | 5.0% | 2.0% (iv), (v) | 10 FT WIDE |
| F1 | FLARE WITHIN SIDEWALK | 10.0% (vii) | - | - |
| F2 | FLARE NOT IN SIDEWALK | 25.0% (vii) | - | - |

(i) SIDEWALK WIDTH IS EXCLUSIVE OF THE WIDTH OF THE CURB. PROVIDE 5 FT X 5 FT PASSING SPACES AT 200 FT MAX. INTERVALS WHERE SIDEWALK WIDTH IS LESS THAN 5 FT (PROWAG R302.3 - R302.4). DRIVEWAYS OR OTHER PAVED SURFACES MAY BE USED AS A PASSING SPACE WHERE A MINIMUM 5 FT WIDE AREA MEETING SIDEWALK REQUIREMENTS IS PROVIDED.

(ii) USE A 5 FT MIN. DEPTH IN THE DIRECTION OF THE RAMP RUN FOR PERPENDICULAR RAMPS WHERE TURNING SPACE IS CONSTRAINED AT THE BACK OF SIDEWALK. (PROWAG R304.2.1)
USE A 5 FT MIN. WIDTH IN THE DIRECTION OF THE STREET CROSSING FOR PARALLEL RAMPS WHERE TURNING SPACE IS CONSTRAINED ON 2 OR MORE SIDES (PROWAG R304.3.1)
TURNING SPACE IS CONSTRAINED BY ANY VERTICAL DIFFERENCE GREATER THAN 3.0 IN.

(iii) LENGTH OF 8.3% MAX RUNNING SLOPE IS NOT REQUIRED TO EXCEED 15 FT. STEEPEN GRADE TO MATCH EXISTING WITHIN AT LEAST 15 FT OR THE NEXT NEAREST JOINT IF THE MAX RUNNING SLOPE CAN NOT BE MET IN 15 FT. (PROWAG R304.2.2, R304.3.2).

(iv) DO NOT EXCEED 2.0% CROSS SLOPE FOR CROSSINGS WHERE THERE IS STOP OR YIELD SIGN.
DO NOT EXCEED 5.0% CROSS SLOPE FOR CROSSINGS WHERE THERE IS NO STOP OR YIELD SIGN OR WHERE THERE IS A TRAFFIC SIGNAL DESIGNED FOR A GREEN PHASE. (PROWAG R302.6)

(v) MATCH THE HIGHWAY GRADE AT MIDBLOCK CROSSINGS (PROWAG R302.6.2)

(vi) FLATTEN GUTTER SLOPE TO 5.0 PERCENT MAX AND MAINTAIN CLEAR SPACE RUNNING SLOPE ACROSS ENTIRE CURB CUT. (PROWAG R304.5.4) (SEE STD DWG PA 3, DETAIL A)

(vii) MEASURE FLARE SLOPE PARALLEL TO CURB LINE. FLARES NOT IN THE SIDEWALK ARE PERMITTED TO BE A VERTICAL CURB FACE WHEN ACCESS FROM PLOWS IS NOT EXPECTED.

(viii) MATCH TURNING SPACE, RAMP, AND AT-GRADE ACCESS WIDTH TO CURB CUT AT PROJECTED BACK OF CURB.

**DEFINITIONS**

**SINGLE DIAGONAL (APEX) RAMP:** A CURB RAMP THAT SERVES BOTH PEDESTRIAN STREET CROSSINGS (PROWAG R207.2)

**AT-GRADE ACCESS:** A RAISED PEDESTRIAN STREET CROSSING OR SIMILAR CONNECTION BETWEEN THE PEDESTRIAN ACCESS ROUTE AT THE LEVEL OF THE SIDEWALK AND THE LEVEL OF THE PEDESTRIAN STREET CROSSING THAT HAS NO CHANGE IN GRADE BETWEEN ADJACENT PEDESTRIAN ACCESS ROUTE ELEMENTS.

**CLEAR SPACE:** A SPACE BEYOND THE BOTTOM GRADE BREAK OF THE RAMP, PROVIDED WITHIN THE WIDTH OF THE PEDESTRIAN STREET CROSSING AND WHOLLY OUTSIDE THE PARALLEL VEHICLE TRAVEL LANE (PROWAG R304.5.5)

**COMBINATION RAMP:** RAMPS THAT PROVIDE A COMBINATION OF CONFORMING PARALLEL AND PERPENDICULAR RAMPS

**CROSS SLOPE:** THE GRADE THAT IS PERPENDICULAR TO THE DIRECTION OF PEDESTRIAN TRAVEL (PROWAG R105.5)

**CURB CUT:** THE AREA WHERE THE CURB IS CUT FLUSH TO THE FLOWLINE OF THE GUTTER OR ADJACENT ROADWAY EXCLUDING SLOPED CURB AT THE SIDES.

**EXISTING PHYSICAL CONSTRAINTS**: INCLUDE, BUT ARE NOT LIMITED TO, UNDERLYING TERRAIN, RIGHT-OF-WAY AVAILABILITY, UNDERGROUND STRUCTURES, ADJACENT DEVELOPED FACILITIES, DRAINAGE, OR THE PRESENCE OF A NOTABLE NATURAL OR HISTORIC FEATURE. (PROWAG R202.3.1)

**GRADE BREAK:** THE LINE WHERE TWO SURFACE PLANES WITH DIFFERENT GRADES MEET.

**FLARE:** A SLOPED SURFACE THAT PROVIDES A GRADED TRANSITION ON THE SIDE OF A CURB RAMP BETWEEN THE CURB AND THE TURNING SPACE, MEASURED PARALLEL TO THE CURB.

**PARALLEL RAMP:** CURB RAMPS THAT HAVE A RUNNING SLOPE THAT IS IN-LINE WITH THE DIRECTION OF SIDEWALK TRAVEL AND LOWER THE SIDEWALK TO A LEVEL TURNING SPACE WHERE A TURN IS MADE TO ENTER THE PEDESTRIAN STREET CROSSING. (PROWAG ADVISORY R304.1)

**PEDESTRIAN ACCESS ROUTE:** A CONTINUOUS AND UNOBSTRUCTED PATH OF TRAVEL PROVIDED FOR PEDESTRIANS WITH DISABILITIES WITHIN OR COINCIDING WITH A PEDESTRIAN CIRCULATION PATH (PROWAG R105.5)

**PEDESTRIAN CIRCULATION PATH:** A PREPARED EXTERIOR OR INTERIOR SURFACE PROVIDED FOR PEDESTRIAN TRAVEL IN THE PUBLIC RIGHT-OF-WAY. (PROWAG R105.5)

**PERPENDICULAR RAMP:** CURB RAMPS THAT HAVE A RUNNING SLOPE THAT CUTS THROUGH OR IS BUILT UP TO THE CURB AT RIGHT ANGLES OR MEETS THE GUTTER BREAK AT RIGHT ANGLES WHERE THE CURB IS CURVED. (PROWAG ADVISORY R304.1)

**PROWAG:** "PROPOSED ACCESSIBILITY GUIDELINES FOR PEDESTRIAN FACILITIES IN THE PUBLIC RIGHT-OF-WAY". THE DOCUMENT USED AS THE PRIMARY RESOURCE FOR INFORMATION SHOWN (SEE NOTE 1).

**RAMP (R):** A SLOPED SURFACE FROM ONE PEDESTRIAN ACCESS ROUTE (PAR) ELEVATION TO ANOTHER.

**RUNNING SLOPE:** THE GRADE THAT IS PARALLEL TO THE DIRECTION OF PEDESTRIAN TRAVEL (PROWAG R105.5)

**TURNING SPACE:** SPACE AT THE TOP AND BOTTOM OF A RAMP TO ALLOW FOR DIRECTIONAL CHANGE, PERMITTED TO OVERLAP OTHER TURNING SPACES AND CLEAR SPACES (PROWAG R304.2.1, R304.3.1)

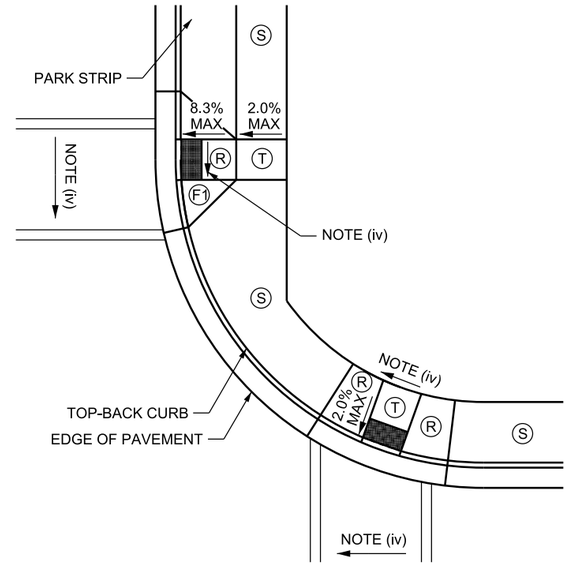


## CROSSING SLOPES DETAIL

CONFIGURATIONS SHOWN ARE EXAMPLES ONLY

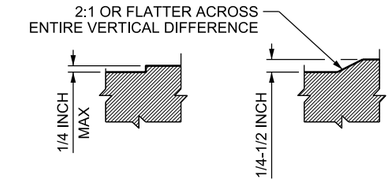


## VERTICAL SURFACE DISCONTINUITIES

NOTE 6

**DESIGN NOTES APPLICABLE TO PA SERIES:**

A. CONVENTIONAL INDUSTRY TOLERANCES DO NOT APPLY TO DESIGN WORK. (PROWAG ADVISORY R103.1)

B. PROVIDE A NO PEDESTRIAN (R9-3) SIGN AND A USE CROSSWALK (R9-3BP) PLAQUE (L OR R) IF PEDESTRIAN CROSSING IS PROHIBITED AT UNMARKED CROSSWALKS. (PROWAG ADVISORY R206) (SEE STD DWG PA 3 DETAIL B)

C. A SINGLE DIAGONAL CORNER (APEX) RAMP IS PERMITTED TO SERVE BOTH PEDESTRIAN CROSSINGS IN SITUATIONS WHERE EXISTING PHYSICAL CONSTRAINTS PREVENT THE USE OF A CURB RAMP, AT-GRADE ACCESS, OR A COMBINATION OF CURB RAMPS AND AT-GRADE ACCESS. (PROWAG R207.2) USE OF A SINGLE DIAGONAL RAMP IS DISCOURAGED AND IS ONLY TO BE USED AT THE APPROVAL OF THE REGION TRAFFIC ENGINEER.

D. ONLY A (4.0 FT) PORTION OF THE SIDEWALK IS REQUIRED TO COMPLY WITH THE REQUIREMENTS LISTED HEREIN WHERE SIDEWALKS ARE WIDER THAN 4.0 FT. (PROWAG ADVISORY R302.3)

E. PROVIDE A FIRM, STABLE, AND SLIP RESISTANT SURFACE FOR ALL PEDESTRIAN ACCESS ROUTES (PROWAG R302.7)

**GENERAL NOTES APPLICABLE TO PA SERIES:**

1. INFORMATION PROVIDED IS BY REFERENCE FROM THE UNITED STATES ACCESS BOARD DOCUMENT "PROPOSED ACCESSIBILITY GUIDELINES FOR PEDESTRIAN FACILITIES IN THE PUBLIC RIGHT-OF-WAY" (PROWAG).

2. THE USE OF ALTERNATIVE DESIGNS, PRODUCTS, OR TECHNOLOGIES THAT MEET OR EXCEED THE REQUIREMENTS SHOWN IS PERMITTED. (PROWAG R102)

3. PROVIDE AN ALTERNATE PEDESTRIAN ACCESS ROUTE COMPLYING WITH SECTIONS 6D.01, 6D.02, AND 6G.05 OF THE MUTCD WHEN A PEDESTRIAN CIRCULATION PATH IS TEMPORARILY CLOSED. COMPLY WITH SECTIONS 6F.63, 6F.68, AND 6F.71 OF THE MUTCD WHERE PEDESTRIAN BARRICADES AND CHANNELIZING DEVICES ARE PROVIDED. (PROWAG R205)

4. CONNECT THE PEDESTRIAN ACCESS ROUTES AT EACH PEDESTRIAN STREET CROSSING WITH A CURB RAMP, AT-GRADE ACCESS, OR A COMBINATION OF CURB RAMPS AND AT-GRADE ACCESSES. (PROWAG R207.1)

5. LOCATE THE CURB RAMP (EXCLUDING FLARED SIDES) OR AT-GRADE ACCESS COMPLETELY WITHIN THE CROSSWALK (PROWAG R207.1)

6. CONSTRUCT ALL GRADE BREAKS TO BE FLUSH (PROWAG R302.7.1) PREVENT OR CORRECT ANY VERTICAL DIFFERENCES IN SURFACES GREATER THAN 0.5 IN. BEVEL VERTICAL DIFFERENCES BETWEEN 0.25 IN AND 0.5 IN WITH A SLOPE NOT STEEPER THAN 2H:1V ACROSS THE ENTIRE VERTICAL DIFFERENCE. (PROWAG R302.7.2) (SEE DETAIL BELOW)

7. CONSTRUCT GRADE BREAKS AT THE TOP AND BOTTOM OF CURB RAMP RUNS PERPENDICULAR TO THE DIRECTION OF THE RAMP RUN. DO NOT PLACE GRADE BREAKS ON THE SURFACES OF RAMP RUNS AND TURNING SPACES. (PROWAG R304.5.2)

8. SITE CONDITIONS MAY VARY. CONFIGURATION OF RAMP, AT-GRADE ACCESS, TURNING SPACE, AND CLEAR SPACE MAY BE ALTERED, BUT THEY MUST MEET DIMENSIONS AND SLOPES SHOWN HERE. THE USE OF ITEMS SUCH AS FLARES AND CURBWALLS ARE AT THE DISCRETION OF THE ENGINEER.

9. DO NOT USE DIRECTIONAL ACCESSES WHEN PEDESTRIANS CAN APPROACH THE DETECTABLE WARNING SURFACE FROM MORE THAN ONE DIRECTION.

10. CONSTRUCT ALL PEDESTRIAN ACCESS ROUTE ELEMENTS SO MAXIMUM OR MINIMUM VALUES ARE NOT EXCEEDED.

11. PROVIDE TOOLED JOINTS ON ALL GRADE BREAKS.

SUPPLEMENTAL DRAWING

REVISIONS

| NO. | DATE | APPR. | REMARKS |
|---|---|---|---|
| 2 | 2/28/19 | CGW | REPLACED BLENDED TRANSITION WITH AT-GRADE ACCESS |
| 1 | 2/22/18 | CGW | NEW DRAWING |

UTAH DEPARTMENT OF TRANSPORTATION
STANDARD DRAWINGS FOR ROAD AND BRIDGE CONSTRUCTION
SALT LAKE CITY, UTAH

RECOMMENDED FOR APPROVAL — FEB. 28, 2019 DATE
CHAIRMAN STANDARDS COMMITTEE APPROVED — FEB. 28, 2019 DATE
DEPUTY DIRECTOR

GENERAL PEDESTRIAN ACCESS
STANDARD DRAWING TITLE

STD. DWG. NO.
PA 1

DGN File:L:\Standard_Drawings\Imperial\2017 Approved_Supplemental_Issues\SuppApproved Feb - 2019\Backup\PA 01.dgn
04-MAR-2019

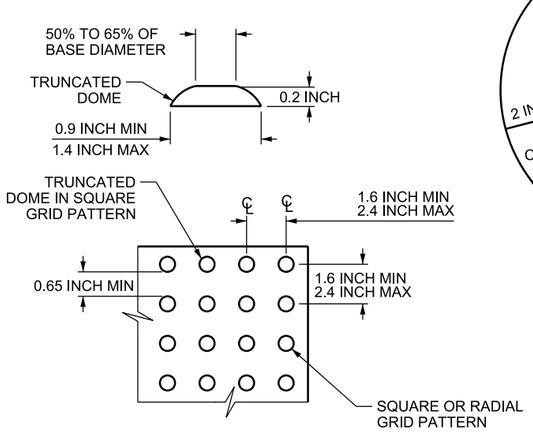


## DETECTABLE WARNING SURFACE DETAIL A

(PROWAG R305)

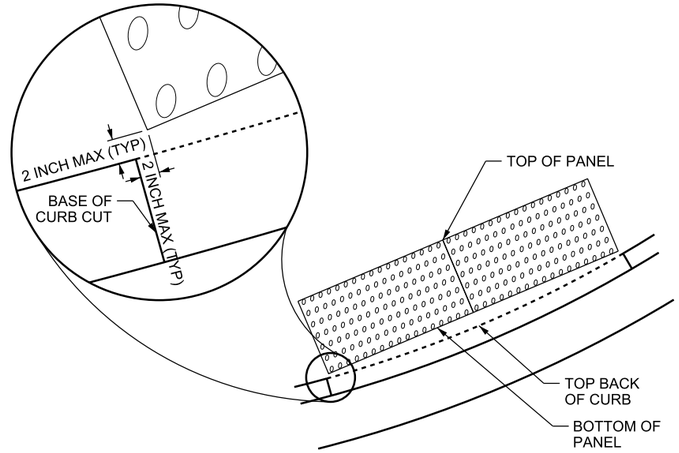


## DETECTABLE WARNING SURFACE PANEL WITHOUT GAP (PREFERRED) DETAIL B

SEE NOTES 4 AND 5

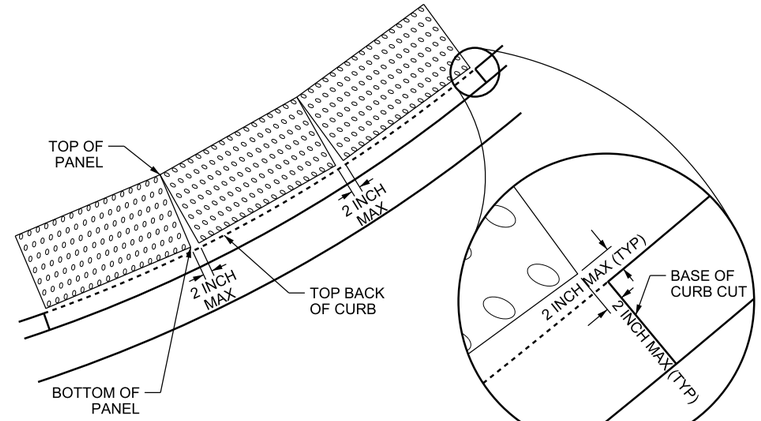


## DETECTABLE WARNING SURFACE PANEL WITH GAP - DETAIL C

SEE NOTES 4 AND 5

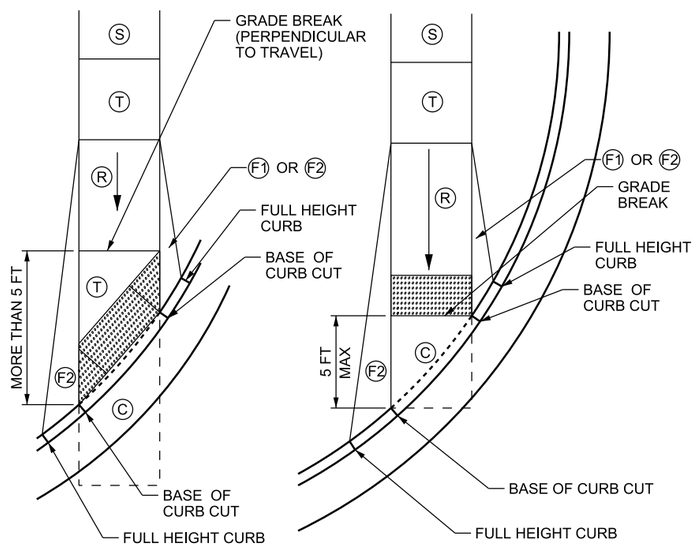


## DETAIL D1

## DETAIL D2

## DETECTABLE WARNING SURFACE PLACEMENT FOR DIRECTIONAL CURB RAMPS DETAIL D

SEE NOTE 5

**NOTES:**

1. REFER TO STD DWG PA 1 FOR DIMENSION TABLE AND GENERAL NOTES.
2. DETECTABLE WARNING SURFACES ARE NOT REQUIRED AT PEDESTRIAN REFUGE ISLANDS THAT ARE CUT-THROUGH AT STREET LEVEL AND ARE LESS THAN 6.0 FT IN LENGTH. THE SIGNAL SHOULD BE TIMED FOR A COMPLETE CROSSING OF THE STREET WHERE SIGNALIZED AND THE CUT-THROUGH ISLAND DOES NOT HAVE DETECTABLE WARNING SURFACES. (PROWAG R208.2)
3. PROVIDE DETECTABLE WARNING SURFACE THAT CONTRASTS WITH ADJACENT ACCESS ROUTE, GUTTER, STREET, AND FLARES, EITHER DARK-ON-LIGHT OR LIGHT-ON-DARK. (PROWAG R305.1.3)
4. PLACE DETECTABLE WARNING SURFACE ACCORDING TO MANUFACTURER'S RECOMMENDATIONS 2 FT MINIMUM IN THE DIRECTION OF PEDESTRIAN TRAVEL FOR THE FULL WIDTH OF THE RAMP (EXCLUDING FLARES), BLENDED TRANSITION, OR TURNING SPACE (PROWAG R305.1.4). USE OF PRODUCTS DESIGNED TO MATCH THE EXACT CURB RADII ARE ACCEPTABLE. USE A 4 FT MINIMUM CURB CUT WIDTH FOR SINGLE-DIRECTION CROSSWALKS AND AN 8 FT MINIMUM FOR BI-DIRECTIONAL. CURB CUT WIDTHS LESS THAN 8 FT (4 FT MIN) MAY BE USED FOR BI-DIRECTIONAL CROSSWALKS UPON APPROVAL OF THE REGION TRAFFIC ENGINEER. DETECTABLE WARNING SURFACE WIDTHS IN 4 FT INCREMENTS ARE PREFERRED.
5. PLACE DETECTABLE WARNING SURFACE ON PERPENDICULAR CURB RAMPS AS FOLLOWS (PROWAG R 305.2.1):
   A. PLACE DETECTABLE WARNING SURFACES AT THE BACK OF CURB WHERE THE ENDS OF THE BOTTOM GRADE BREAK ARE IN FRONT OF THE BACK OF CURB.
   B. PLACE DETECTABLE WARNING SURFACES ON THE RAMP RUN WITHIN 2 INCHES OF THE BOTTOM GRADE BREAK WHERE THE ENDS OF THE BOTTOM GRADE BREAK ARE BEHIND THE BACK OF CURB AND THE DISTANCE FROM EITHER END OF THE BOTTOM GRADE BREAK TO THE BACK OF CURB IS 5.0 FT OR LESS. (SEE DETAIL D2)
   C. PLACE DETECTABLE WARNING SURFACES ON THE LOWER LANDING AT THE BACK OF CURB WHERE THE ENDS OF THE BOTTOM GRADE BREAK ARE BEHIND THE BACK OF CURB AND THE DISTANCE FROM EITHER END OF THE BOTTOM GRADE BRAKE TO THE BACK OF CURB IS MORE THAN 5.0 FT. (DETAIL D1)
6. PLACE DETECTABLE WARNING SURFACES AT THE BACK OF CURB ON PARALLEL CURB RAMPS. (PROWAG R305.2.2)
7. PLACE DETECTABLE WARNING SURFACES ON EACH SIDE OF THE RAIL CROSSING AT PEDESTRIAN AT-GRADE RAIL CROSSINGS NOT LOCATED WITHIN A STREET OR HIGHWAY. PLACE THE EDGE OF THE DETECTABLE WARNING SURFACE NEAREST THE RAIL CROSSING BETWEEN 6.0 FT MINIMUM AND 15.0 FT MAXIMUM FROM THE CENTERLINE OF THE NEAREST RAIL. PLACE DETECTABLE WARNING SURFACES ON THE SIDE OF THE GATES OPPOSITE THE RAIL WHERE PEDESTRIAN GATES ARE PROVIDED. (PROWAG R305.2.5) EXTEND THE DETECTABLE WARNING SURFACE THE ENTIRE SIDEWALK/APPROACH WIDTH. (PROWAG R305.1.4)
8. PLACE DETECTABLE WARNING SURFACES AT THE FLUSH TRANSITION BETWEEN THE STREET AND SIDEWALK WHEN THERE IS AN AT-GRADE ACCESS AND THERE IS NO GRADE CHANGE BETWEEN THE SIDEWALK AND THE STREET. (PROWAG R305.2.3)
9. THE TURNING SPACE IS PERMITTED TO OVERLAP OTHER TURNING SPACES AND CLEAR SPACES. (PROWAG R304.2.1, R304.3.1)
10. GRIND OFF REMAINING PORTION OF ANY CUT DOMES WHEN DETECTABLE WARNING SURFACE IS CUT. SEAL ALL CUT PANEL EDGES TO PREVENT WATER DAMAGE.

SUPPLEMENTAL DRAWING

REVISIONS

| NO. | DATE | APPR. | REMARKS |
|---|---|---|---|
| 2 | 2/28/19 | CGW | RELOCATED REFUGE DETAIL TO PA 4. REMOVED 7TH AND 11TH NOTES. REVISED NOTES 6,7,9 |
| 1 | 2/22/18 | CGW | NEW DRAWING |

UTAH DEPARTMENT OF TRANSPORTATION
STANDARD DRAWINGS FOR ROAD AND BRIDGE CONSTRUCTION
SALT LAKE CITY, UTAH

RECOMMENDED FOR APPROVAL — FEB. 28, 2019 DATE

CHAIRMAN STANDARDS COMMITTEE APPROVED — FEB. 28, 2019 DATE

DEPUTY DIRECTOR

STANDARD DRAWING TITLE: DETECTABLE WARNING SURFACE PEDESTRIAN ACCESS

STD. DWG. NO. PA 2

04-MAR-2019 DGN File:L:\Standard_Drawings\Imperial\2017 Approved_Supplemental_Issues\Supp8Approved Feb - 2019\Backup\PA 02.dgn

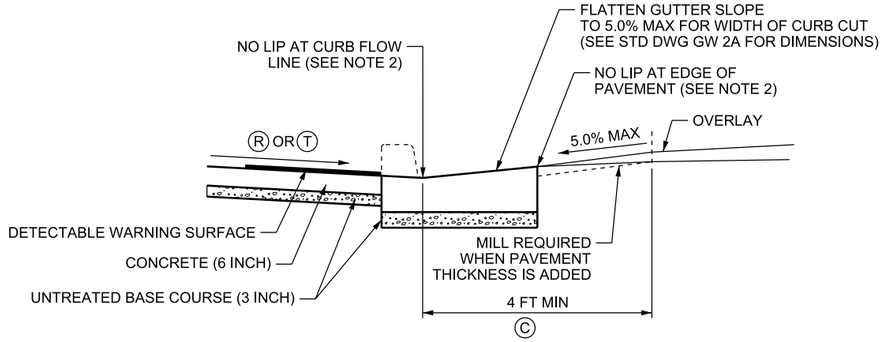


## CLEAR SPACE
## DETAIL A

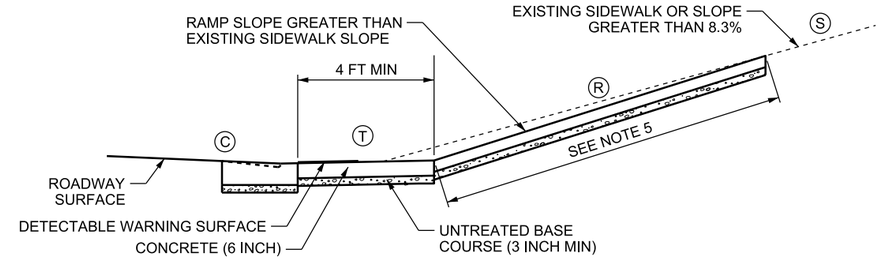


**RAMP SLOPE STEEPENED TO MATCH EXISTING GRADE**

## 15-FT MAXIMUM RAMP SLOPE DETAIL
## DETAIL D

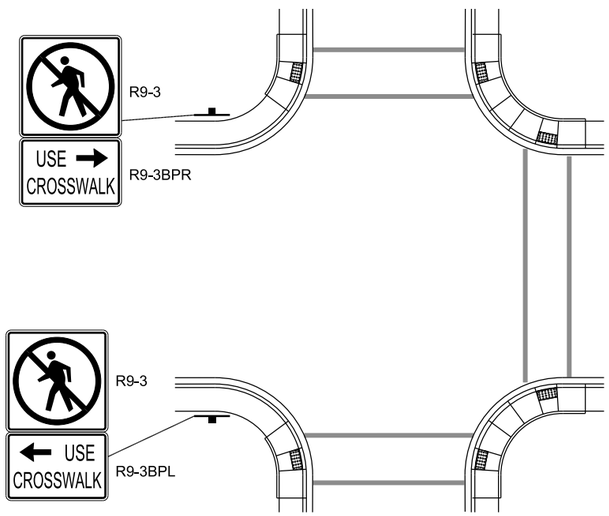


## SIGNING FOR PROHIBITED PEDESTRIAN CROSSING
## DETAIL B

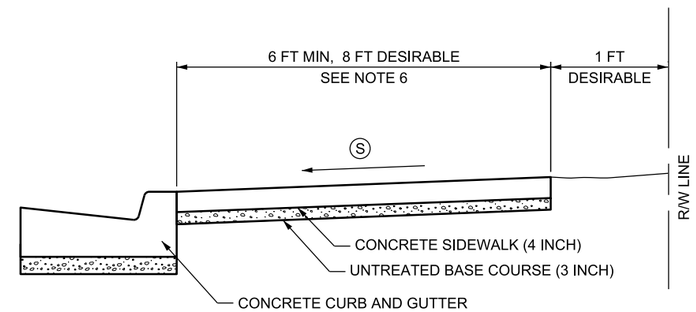


## NO PARKSTRIP
## DETAIL E

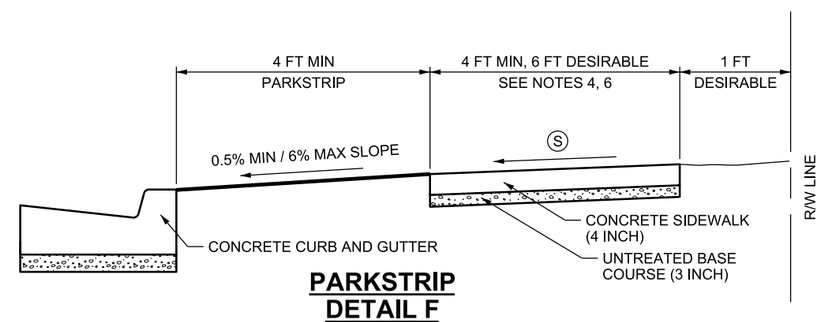


## PARKSTRIP
## DETAIL F

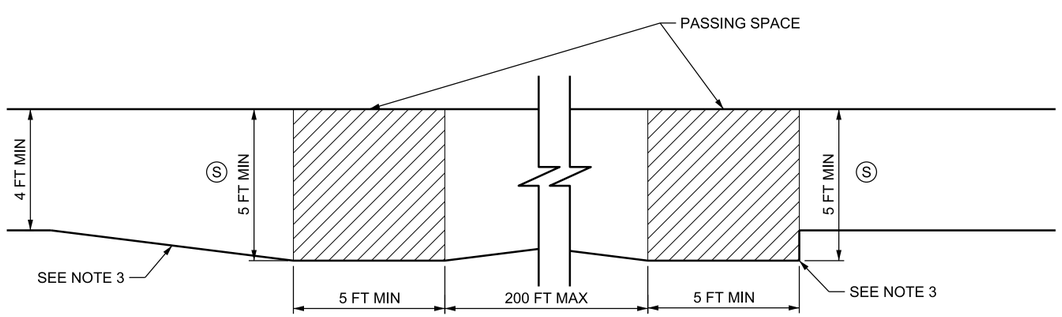


## PASSING SPACE
## DETAIL C

SEE NOTE 4

**NOTES:**

1. REFER TO STD DWG PA 1 FOR DIMENSION TABLE AND GENERAL NOTES.
2. SEE STD DWG PA 1, NOTE 6 FOR VERTICAL DIFFERENCE ALLOWANCES OR TREATMENTS.
3. FLARE AT A RATE EQUAL TO THE PANEL WIDTH TO ALLOW TRANSITIONS ACROSS WHOLE PANELS WHEN A TAPER RATE IS USED TO TRANSITION FROM AND TO A PASSING SPACE. USE A 5:1 FLARE RATE FOR A 5 FT WIDE SIDEWALK FOR EXAMPLE. TAPER RATE MAY BE MODIFIED OR OMITTED WHERE SITE CONDITIONS PROHIBIT USE.
4. SIDEWALK WIDTH IS EXCLUSIVE OF THE WIDTH OF THE CURB. PROVIDE 5 FT X 5 FT PASSING SPACES AT 200 FT MAX. INTERVALS WHERE SIDEWALK WIDTH IS LESS THAN 5 FT (PROWAG R302.3 - R302.4). DRIVEWAYS AND OTHER PAVED AREAS MAY BE USED AS A PASSING SPACE WHERE A MINIMUM 5 FT WIDE AREA MEETING SIDEWALK REQUIREMENTS IS PROVIDED.
5. STEEPEN GRADE TO MATCH EXISTING WITHIN AT LEAST 15 FT OR THE NEXT NEAREST JOINT IF THE MAX RUNNING SLOPE CAN NOT BE MET IN 15 FT. (PROWAG R304.2.2, R304.3.2). IN CONDITIONS WHERE THE SIDEWALK IS NEAR OR ATTACHED TO THE CURB AND GUTTER, MOVE THE TURNING SPACE AWAY FROM THE RAMP SLOPE TO ALLOW FOR THE 8.3% MAXIMUM GRADE.
6. THE FOLLOWING MINIMUM WIDTHS ARE REQUIRED FROM BACK OF CURB TO BACK OF SIDEWALK AT DRIVEWAY LOCATIONS TO MEET GRADING REQUIREMENTS:
   - TYPE B1 CURB AND GUTTER: 7.67 FT
   - TYPE B2 CURB AND GUTTER: 9.75 FT
   - TYPE M2 CURB AND GUTTER: 5.08 FT

SUPPLEMENTAL DRAWING

REVISIONS

| NO. | DATE | APPR. | REMARKS |
|---|---|---|---|
| 2 | 2/28/19 | CGW | NAMING FOR UTBC AND CONCRETE REVISED. REFERENCE IN DT F UPDATED |
| 1 | 2/22/18 | CGW | NEW DRAWING |

**UTAH DEPARTMENT OF TRANSPORTATION**
STANDARD DRAWINGS FOR ROAD AND BRIDGE CONSTRUCTION
SALT LAKE CITY, UTAH

RECOMMENDED FOR APPROVAL: FEB. 28, 2019 DATE
CHAIRMAN STANDARDS COMMITTEE APPROVED: FEB. 28, 2019 DATE
DEPUTY DIRECTOR

PEDESTRIAN ACCESS DETAILS
STANDARD DRAWING TITLE

STD. DWG. NO.
PA 3

DGN File:L:\Standard Drawings\Imperial\2017 Approved_Supplemental Issues\Supp80Approved Feb - 2019\Backup\PA 03.dgn
04-MAR-2019

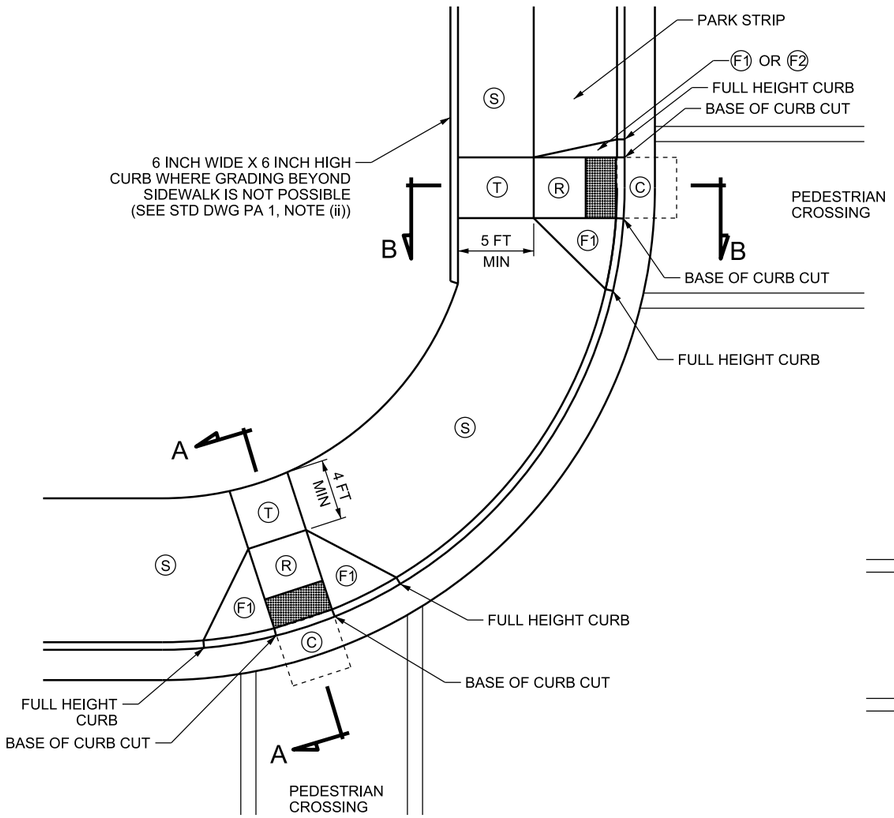


## DUAL PERPENDICULAR RAMP AT CORNER OPTION

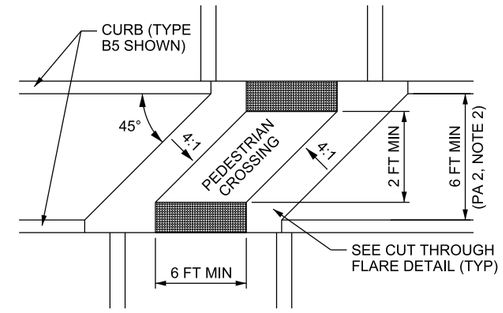


## PEDESTRIAN REFUGE - ANGLED CUT THROUGH EXAMPLE

PREFERRED APPLICATION, ORIENT AS SHOWN

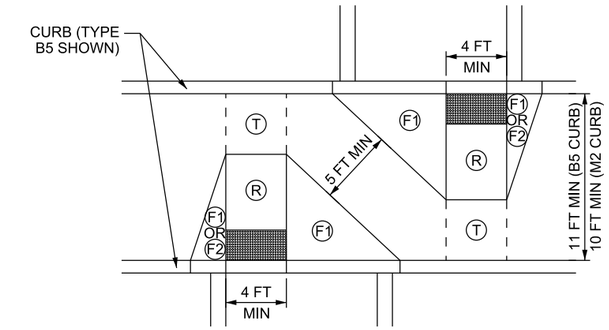


## PEDESTRIAN REFUGE - PERPENDICULAR CURB RAMP EXAMPLE

ORIENT AS SHOWN

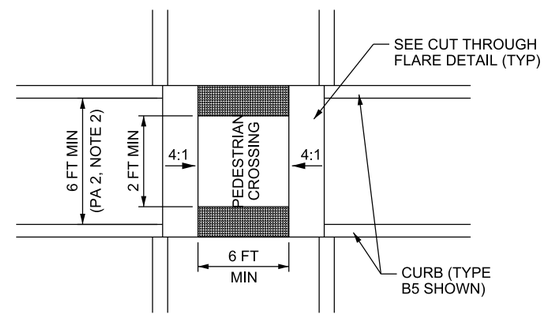


## PEDESTRIAN REFUGE - CUT THROUGH EXAMPLE

LIMITED USE WHEN ANGLED CUT THROUGH CAN NOT BE PLACED

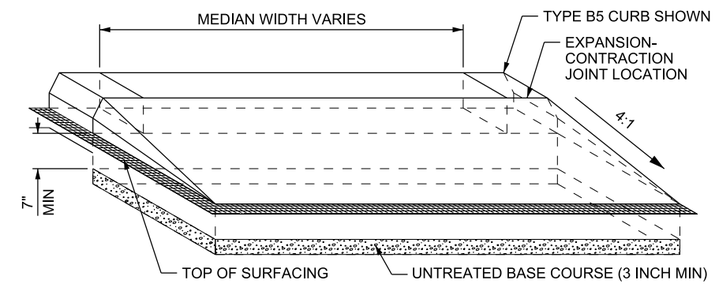


## CUT THROUGH FLARE DETAIL

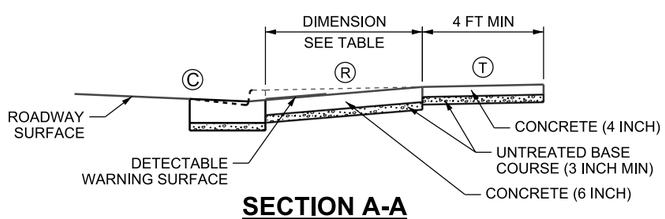


## SECTION A-A

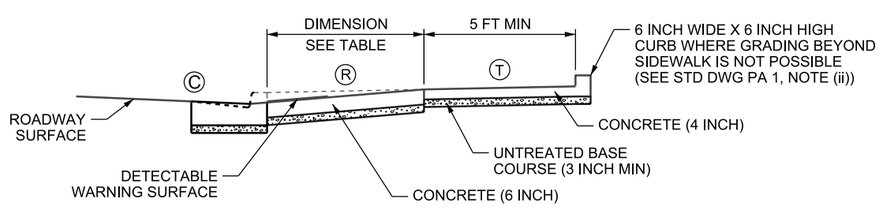


## SECTION B-B

| MIN CONSTRUCTABLE DIMENSIONS | | |
|---|---|---|
| CURB TYPE | SLOPE | MINIMUM DIMENSION (FT)* |
| B1-A | 5% | 11.6 |
| B1-A | 8.3% | 5.2 |
| B2-A | 5% | 15.75 |
| B2-A | 8.3% | 7.2 |
| M1-A | 5% | 5.75 |
| M1-A | 8.3% | 2.3 |

* MIN LENGTHS ASSUME 2% SIDEWALK/PARKSTRIP CROSS SLOPE

**NOTES:**

1. REFER TO STD DWG PA 1 FOR DIMENSION TABLE AND GENERAL NOTES.
2. REFER TO STD DWG PA 2 FOR DETECTABLE WARNING SURFACE DETAILS.
3. REFER TO STD DWG PA 3, DETAIL A FOR CLEAR SPACE DETAIL.
4. RAMPS SHOWN ON THIS DRAWING ARE ACCEPTABLE FOR USE AT MID-BLOCK OR CORNER INSTALLATIONS.
5. PROVIDE TOOLED JOINTS ON ALL GRADE BREAKS.
6. PLACE REFUGE AS SHOWN WHEN RAISED MEDIAN CAN NOT BE PLACED ON BOTH SIDES OF CROSSWALK.
7. 4 FT MINIMUM WIDTH WHEN CUT THROUGH FLARE IS USED, 5 FT MINIMUM WIDTH WHEN CURBS ARE USED (CONSTRAINED ON TWO SIDES).
8. USE CROSSWALK SLOPES. SEE STD DWG PA 1, NOTES (iv) AND (v).
9. CUT THROUGH FLARE CAN BE OMITTED WHEN NOT IN THE DIRECTION OF PLOWING OPERATIONS.

SUPPLEMENTAL DRAWING

REVISIONS

| NO. | DATE | APPR. | REMARKS |
|---|---|---|---|
| 2 | 2/28/19 | CGW | REMOVED BLENDED TRANSITION, ADDED REFUGE ISLAND DETAILS |
| 1 | 2/22/18 | CGW | NEW DRAWING |

UTAH DEPARTMENT OF TRANSPORTATION
STANDARD DRAWINGS FOR ROAD AND BRIDGE CONSTRUCTION
SALT LAKE CITY, UTAH

RECOMMENDED FOR APPRO — FEB. 28, 2019 DATE
CHAIRMAN STANDARDS COMMITTEE APPROVED — FEB. 28, 2019 DATE
DEPUTY DIRECTOR

STANDARD DRAWING TITLE
PERPENDICULAR AND MEDIAN REFUGE PEDESTRIAN ACCESS

STD. DWG. NO.
PA 4

DGN File:L:\Standard Drawings\Imperial\2017 Approved_Supplemental_Issues\SuppBApproved Feb - 2019\Backup\PA 04.dgn
04-MAR-2019

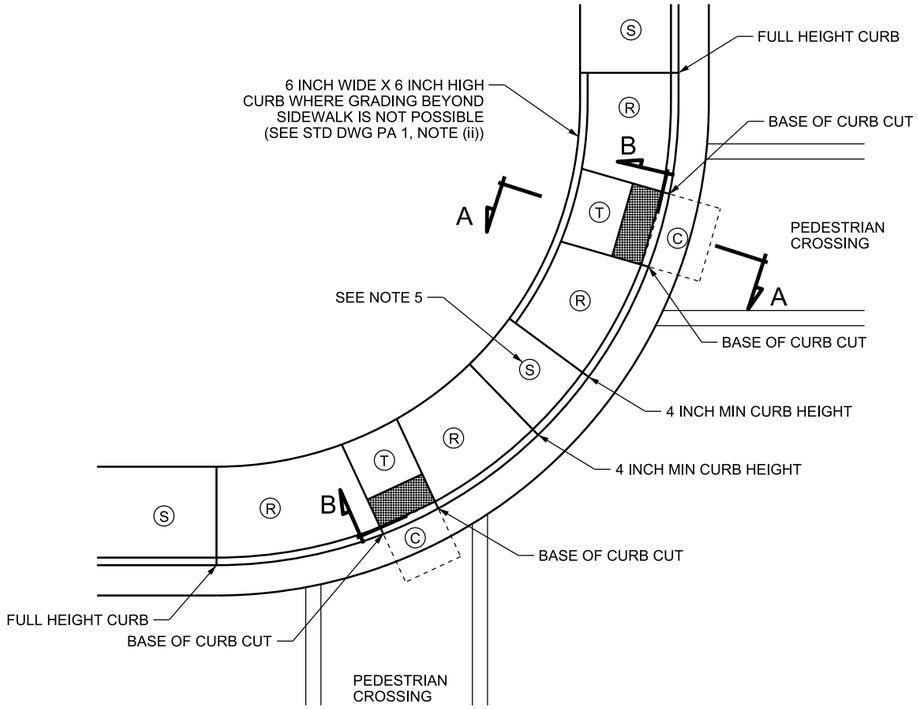


## DUAL PARALLEL RAMP AT CORNER OPTION

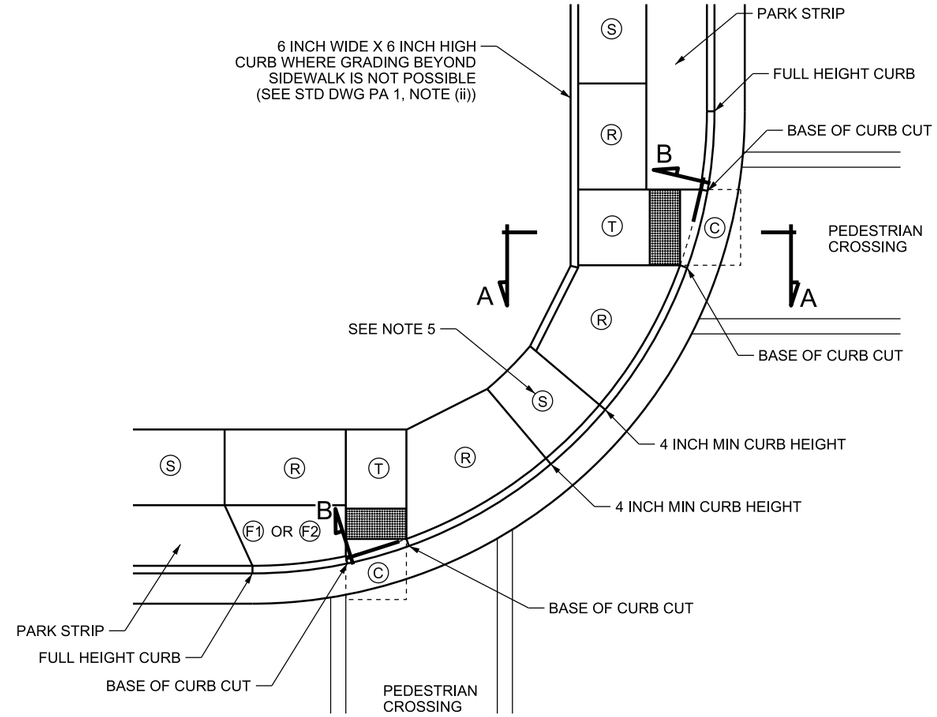


## DUAL PARALLEL RAMP AT CORNER OPTION

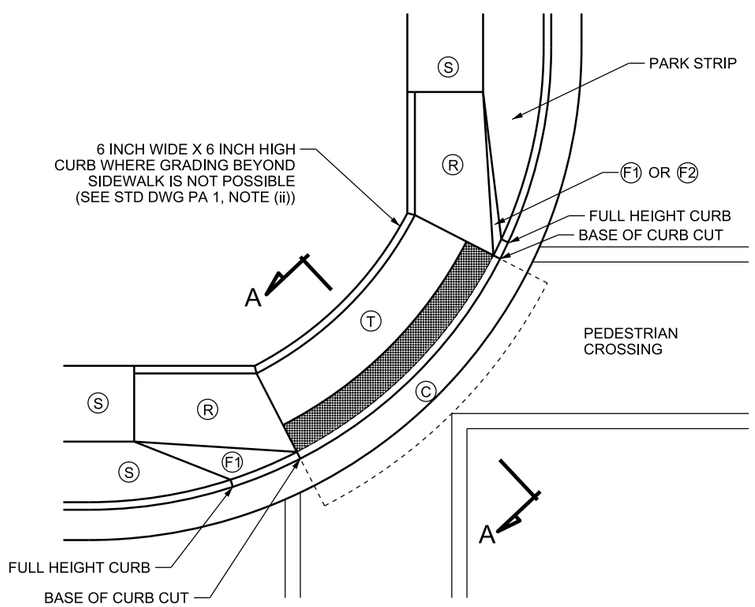


## SINGLE DIAGONAL CORNER (APEX) RAMP OPTION

SEE STD DWG PA 1, NOTE C

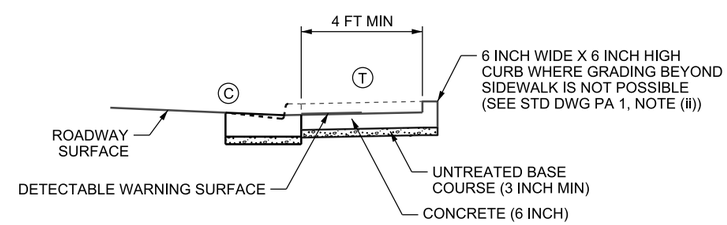


## SECTION A-A

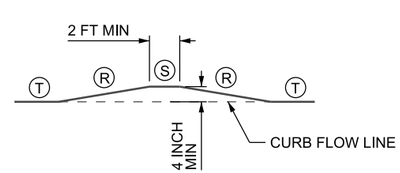


## SECTION B-B

SEE NOTE 5

**NOTES:**

1. REFER TO STD DWG PA 1 FOR DIMENSION TABLE AND GENERAL NOTES.
2. REFER TO STD DWG PA 2 FOR DETECTABLE WARNING SURFACE DETAILS.
3. REFER TO STD DWG PA 3, DETAIL A FOR CLEAR SPACE DETAIL.
4. RAMPS SHOWN ON THIS DRAWING ARE ACCEPTABLE FOR USE AT MID-BLOCK OR CORNER INSTALLATIONS.
5. PROVIDE A MINIMUM 2 FT WIDE SPACE BETWEEN ADJACENT RAMPS. THE CURB HEIGHT OF THIS SPACE IS A MINIMUM 4 INCHES TALL FROM CURB FLOW LINE TO TOP OF CURB. 2 FT WIDE SPACE CAN BE OMITTED WHERE THE ALGEBRAIC GRADE DIFFERENCE BETWEEN THE RAMPS DOES NOT EXCEED 13.3%. PROVIDE A 4 INCH MINIMUM CURB HEIGHT IN ALL CASES.
6. PROVIDE TOOLED JOINTS ON ALL GRADE BREAKS.

SUPPLEMENTAL DRAWING

REVISIONS

| NO. | DATE | APPR. | REMARKS |
|---|---|---|---|
| 2 | 2/28/19 | CGW | REVISED NOTE 5 |
| 1 | 2/22/18 | CGW | NEW DRAWING |

**UTAH DEPARTMENT OF TRANSPORTATION**
STANDARD DRAWINGS FOR ROAD AND BRIDGE CONSTRUCTION
SALT LAKE CITY, UTAH

RECOMMENDED FOR APPROVAL — FEB. 28, 2019 DATE
CHAIRMAN STANDARDS COMMITTEE APPROVED — FEB. 28, 2019 DATE
DEPUTY DIRECTOR — DATE

STANDARD DRAWING TITLE
PARALLEL PEDESTRIAN ACCESS

STD. DWG. NO.
PA 5

DGN File:L:\Standard Drawings\Imperial\2017 Approved_Supplemental Issues\Supp8Approved Feb - 2019\Backup\PA 05.dgn
04-MAR-2019

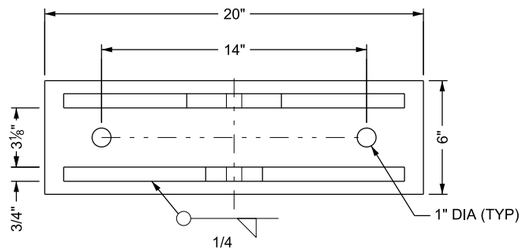


**TOP VIEW**

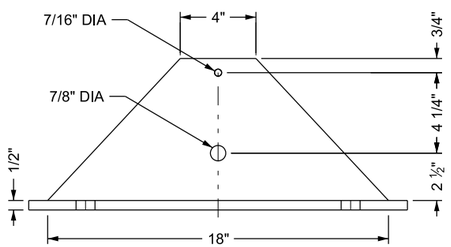


**SIDE VIEW**

**PIVOT SIGN BASE**

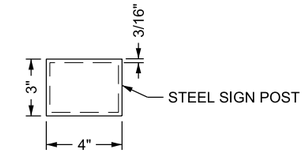


**SECTION A-A**

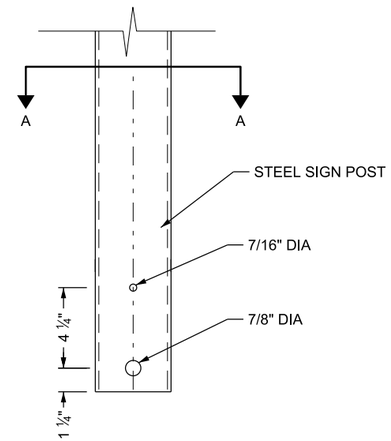


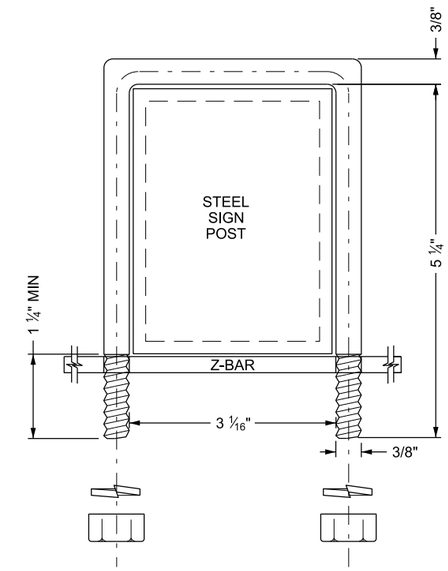


**BRACKET DETAIL**

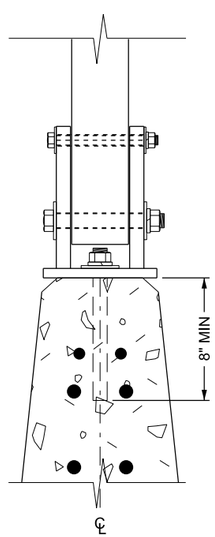


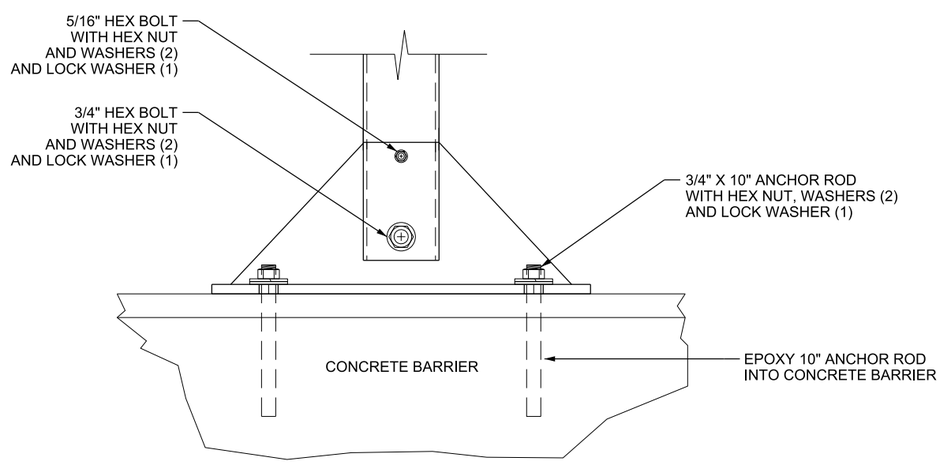


**NOTES:**

1. USE 32 SQ FT MAXIMUM SIGN PANEL AREA.
2. USE SIGN BASE IN MEDIAN APPLICATIONS ONLY, WITH MINIMUM SHOULDER WIDTH OF 4 FT AND MINIMUM BARRIER HEIGHT OF 32 INCH.
3. REFER TO STD DWG SN 2B FOR SIGN MOUNTING HEIGHT AND WIDTH REQUIREMENTS.
4. POST LENGTH DETERMINED BY SIGN SIZE.
5. USE ASTM A 36 STEEL FOR PIVOT SIGN BASE.
6. MEET ASTM A 123 GALVANIZING AFTER FABRICATION IS COMPLETE.
7. STEEL SIGN POST TO MEET STANDARD SPECIFICATION 02891.
8. USE BOLTS, NUTS AND WASHERS CONFORMING TO ASTM F3125, GRADE A325.
9. DURING INSTALLATION, IF REBAR IS ENCOUNTERED, ADJUST THE BRACKET LOCATION LONGITUDINALLY. FILL ANY UNUSED HOLES WITH EPOXY.

SUPPLEMENTAL DRAWING

REVISIONS

| NO. | DATE | APPR. | REMARKS |
|---|---|---|---|
| 1 | 2/28/2019 | JW | NEW DRAWING. |

**UTAH DEPARTMENT OF TRANSPORTATION**
STANDARD DRAWINGS FOR ROAD AND BRIDGE CONSTRUCTION
SALT LAKE CITY, UTAH

RECOMMENDED FOR APPROV. — FEB. 28, 2019 DATE

CHAIRMAN STANDARDS COMMITTEE APPROVED — FEB. 28, 2019 DATE

DEPUTY DIRECTOR

MEDIAN CONCRETE BARRIER PIVOT SIGN BASE

STANDARD DRAWING TITLE

STD. DWG. NO.

SN 14

DGN File:L:\Standard.Drawings\Imperial\2017 Approved_Supplemental.Issues\Supp8Approved Feb - 2019\Backup\SN14.dgn
04-MAR-2019

## POST AND FOUNDATION TABLE

| SIGN HEIGHT, H | SIGN WIDTH, W | | | | | | | | | | | | | | | | | |
|---|---|---|---|---|---|---|---|---|---|---|---|---|---|---|---|---|---|---|
| | ONE POST | | | TWO POSTS | | | | | | | | | | | | THREE POSTS | | FOUR POSTS | |
| | 3'-0" | 4'-0" | 5'-0" | 6'-0" | 7'-0" | 8'-0" | 9'-0" | 10'-0" | 11'-0" | 12'-0" | 13'-0" | 14'-0" | 15'-0" | 16'-0" | 17'-0" | 18'-0" TO 24'- 0" | 25'-0" | 26'-0" TO 32'-0" |
| 1'-0" | | | | S3 x 5.7<br>3'-9"/3'-6" | S3 x 5.7<br>3'-9"/3'-6" | S3 x 5.7<br>3'-9"/3'-6" | S3 x 5.7<br>3'-9"/3'-6" | S3 x 5.7<br>3'-9"/3'-6" | S3 x 5.7<br>3'-9"/3'-6" | S3 x 5.7<br>3'-9"/3'-9" | S3 x 5.7<br>3'-9"/3'-9" | S3 x 5.7<br>4'-0"/3'-9" | S3 x 5.7<br>4'-0"/3'-9" | S3 x 5.7<br>4'-0"/3'-9" | S3 x 5.7<br>4'-0"/4'-0" | S4 x 9.5<br>4'-0"/4'-0" | S3 x 5.7<br>4'-0"/4'-0" | S4 x 9.5<br>4'-0"/4'-0" |
| 1'- 6" | | | | S3 x 5.7<br>3'-9"/3'-6" | S3 x 5.7<br>3'-9"/3'-6" | S3 x 5.7<br>3'-9"/3'-9" | S3 x 5.7<br>4'-0"/3'-9" | S3 x 5.7<br>4'-0"/3'-9" | S3 x 5.7<br>4'-0"/3'-9" | S3 x 5.7<br>4'-0"/3'-9" | S4 x 9.5<br>4'-0"/3'-9" | S4 x 9.5<br>4'-0"/3'-9" | S4 x 9.5<br>4'-0"/3'-9" | S4 x 9.5<br>4'-0"/3'-9" | S4 x 9.5<br>4'-0"/4'-0" | S4 x 9.5<br>4'-3"/4'-0" | S4 x 9.5<br>4'-0"/4'-0" | S4 x 9.5<br>4'-3"/4'-0" |
| 2'- 0" | | | | S3 x 5.7<br>3'-9"/3'-9" | S3 x 5.7<br>4'-0"/3'-9" | S3 x 5.7<br>4'-0"/3'-9" | S4 x 9.5<br>4'-0"/3'-9" | S4 x 9.5<br>4'-0"/3'-9" | S4 x 9.5<br>4'-0"/3'-9" | S4 x 9.5<br>4'-0"/3'-9" | S4 x 9.5<br>4'-3"/3'-9" | S4 x 9.5<br>4'-3"/3'-9" | S4 x 9.5<br>4'-3"/4'-0" | S4 x 9.5<br>4'-3"/4'-0" | S4 x 9.5<br>4'-3"/4'-0" | S4 x 9.5<br>4'-3"/4'-0" | S4 x 9.5<br>4'-3"/4'-0" | S4 x 9.5<br>4'-3"/4'-0" |
| 2'- 6" | | | | S3 x 5.7<br>4'-0"/3'-9" | S4 x 9.5<br>4'-0"/3'-9" | S4 x 9.5<br>4'-0"/3'-9" | S4 x 9.5<br>4'-0"/3'-9" | S4 x 9.5<br>4'-3"/3'-9" | S4 x 9.5<br>4'-3"/3'-9" | S4 x 9.5<br>4'-3"/4'-0" | S4 x 9.5<br>4'-3"/4'-0" | S4 x 9.5<br>4'-3"/4'-0" | S4 x 9.5<br>4'-3"/4'-0" | S4 x 9.5<br>4'-6"/4'-0" | S4 x 9.5<br>4'-3"/4'-0" | S6 x 12.5<br>4'-6"/4'-0" | S4 x 9.5<br>4'-3"/4'-0" | S6 x 12.5<br>4'-6"/4'-0" |
| 3'- 0" | 3" Ø<br>4'-0"/4'-0" | 4" Ø<br>4'-0"/4'-0" | 4" Ø<br>4'-3"/4'-0" | S4 x 9.5<br>4'-0"/3'-9" | S4 x 9.5<br>4'-0"/3'-9" | S4 x 9.5<br>4'-3"/3'-9" | S4 x 9.5<br>4'-3"/3'-9" | S4 x 9.5<br>4'-3"/4'-0" | S4 x 9.5<br>4'-3"/4'-0" | S4 x 9.5<br>4'-3"/4'-0" | S4 x 9.5<br>4'-6"/4'-0" | S6 x 12.5<br>4'-6"/4'-0" | S6 x 12.5<br>4'-6"/4'-0" | S6 x 12.5<br>4'-6"/4'-0" | S6 x 12.5<br>4'-6"/4'-0" | S6 x 12.5<br>4'-6"/4'-0" | S6 x 12.5<br>4'-6"/4'-0" | S6 x 12.5<br>4'-6"/4'-3" |
| 4'- 0" | 4" Ø<br>4'-0"/4'-0" | 4" Ø<br>4'-3"/4'-0" | 5" Ø<br>4'-6"/4'-0" | S4 x 9.5<br>4'-3"/3'-9" | S4 x 9.5<br>4'- 3"/4'-0" | S4 x 9.5<br>4'-3"/4'-0" | S4 x 9.5<br>4'-3"/4'-0" | S6 x 12.5<br>4'-6"/4'-0" | S6 x 12.5<br>4'-6"/4'-0" | S6 x 12.5<br>4'-6"/4'-0" | S6 x 12.5<br>4'-6"/4'-3" | S6 x 12.5<br>4'-9"/4'-3" | S6 x 12.5<br>4'-9"/4'-3" | S6 x 12.5<br>4'-9"/4'-3" | S6 x 12.5<br>4'-9"/4'-3" | S6 x 12.5<br>4'-9"/4'-3" | S6 x 12.5<br>4'-9"/4'-3" | S6 x 12.5<br>4'-9"/4'-3" |
| 5'- 0" | 4" Ø<br>4'-3"/4'-0" | 5" Ø<br>4'-6"/4'-0" | 5" Ø<br>4'-6"/4'-3" | S4 x 9.5<br>4'-3"/4'-0" | S6 x 12.5<br>4'-6"/4'-0" | S6 x 12.5<br>4'-6"/4'-0" | S6 x 12.5<br>4'-6"/4'-0" | S6 x 12.5<br>4'-9"/4'-3" | S6 x 12.5<br>4'-9"/4'-3" | S6 x 12.5<br>4'-9"/4'-3" | S6 x 12.5<br>4'-9"/4'-3" | S6 x 12.5<br>5'-0"/4'-3" | S6 x 12.5<br>5'-0"/4'-6" | S6 x 12.5<br>5'-0"/4'-6" | S6 x 12.5<br>5'-0"/4'-6" | S6 x 12.5<br>5'-0"/4'-6" | S6 x 12.5<br>5'-0"/4'-6" | S6 x 12.5<br>5'-0"/4'-6" |
| 6'- 0" | 5" Ø<br>4'-6"/4'-0" | 5" Ø<br>4'-9"/4'-3" | 6" Ø<br>4'-9"/4'-3" | S6 x 12.5<br>4'-6"/4'-0" | S6 x 12.5<br>4'-6"/4'-0" | S6 x 12.5<br>4'-9"/4'-3" | S6 x 12.5<br>4'-9"/4'-3" | S6 x 12.5<br>4'-9"/4'-3" | S6 x 12.5<br>5'-0"/4'-3" | S6 x 12.5<br>5'-0"/4'-6" | S6 x 12.5<br>5'-0"/4'-6" | S6 x 17.25<br>5'-6"/4'-6" | S6 x 17.25<br>5'-6"/4'-6" | S8 x 18.4<br>5'-6"/4'-6" | S6 x 17.25<br>5'-6"/4'-6" | S8 x 18.4<br>5'-6"/4'-6" | S6 x 17.25<br>5'-6"/4'-6" | S8 x 18.4<br>5'-6"/4'-6" |
| 7'- 0" | 5" Ø<br>4'-9"/4'-0" | 6" Ø<br>5'-0"/4'-3" | 6" Ø<br>5'-0"/4'-6" | S6 x 12.5<br>4'-9"/4'-0" | S6 x 12.5<br>4'-9"/4'-3" | S6 x 12.5<br>4'-9"/4'-3" | S6 x 12.5<br>5'-0"/4'-3" | S6 x 12.5<br>5'-0"/4'-3" | S6 x 12.5<br>5'-6"/4'-6" | S6 x 17.25<br>5'-6"/4'-6" | S8 x 18.4<br>5'-6"/4'-6" | S8 x 18.4<br>5'-6"/4'-6" | S8 x 18.4<br>5'-6"/4'-9" | S8 x 18.4<br>5'-6"/4'-9" | S8 x 18.4<br>5'-6"/4'-9" | S8 x 18.4<br>5'-6"/4'-9" | S8 x 18.4<br>5'-6"/4'-9" | S8 x 18.4<br>5'-6"/4'-9" |
| 8'- 0" | 5" Ø<br>4'-9"/4'-3" | 6" Ø<br>5'-0"/4'-3" | 6" Ø<br>5'-6"/4'-6" | S6 x 12.5<br>4'-9"/4'-3" | S6 x 12.5<br>5'-0"/4'-3" | S6 x 12.5<br>5'-0"/4'-3" | S6 x 12.5<br>5'-6"/4'-6" | S6 x 17.25<br>5'-6"/4'-6" | S6 x 17.25<br>5'-6"/4'-6" | S8 x 18.4<br>5'-6"/4'-6" | S8 x 18.4<br>5'-6"/4'-9" | S8 x 18.4<br>6'-0"/4'-9" | S8 x 18.4<br>6'-0"/4'-9" | S8 x 18.4<br>6'-0"/4'-9" | S8 x 18.4<br>6'-0"/4'-9" | S8 x 18.4<br>6'-0"/4'-9" | S8 x 18.4<br>6'-0"/4'-9" | S8 x 18.4<br>6'-0"/4'-9" |
| 9'- 0" | 6" Ø<br>5'-0"/4'-3" | 6" Ø<br>5'-6"/4'-6" | 8" Ø<br>5'-6"/4'-6" | S6 x 12.5<br>5'-0"/4'-3" | S6 x 12.5<br>5'-0"/4'-3" | S6 x 12.5<br>5'-6"/4'-6" | S6 x 17.25<br>5'-6"/4'-6" | S8 x 18.4<br>5'-6"/4'-6" | S8 x 18.4<br>5'-6"/4'-9" | S8 x 18.4<br>6'-0"/4'-9" | S8 x 18.4<br>6'-0"/4'-9" | S8 x 18.4<br>6'-0"/4'-9" | S8 x 18.4<br>6'-0"/5'-0" | W10 x 19<br>6'-0"/5'-0" | S8 x 18.4<br>6'-0"/5'-0" | W10 x 19<br>6'-0"/5'-0" | S8 x 18.4<br>6'-0"/5'-0" | W10 x 19<br>6'-0"/5'-0" |
| 10'- 0" | 6" Ø<br>5'-6"/4'-3" | 8" Ø<br>5'-6"/4'-6" | 8" Ø<br>6'-0"/5'-0" | S6 x 12.5<br>5'-6"/4'-3" | S6 x 17.25<br>5'-6"/4'-6" | S6 x 17.25<br>5'-6"/4'-6" | S8 x 18.4<br>5'-6"/4'-6" | S8 x 18.4<br>6'-0"/4'-9" | S8 x 18.4<br>6'-0"/4'-9" | S8 x 18.4<br>6'-0"/4'-9" | S8 x 18.4<br>6'-0"/5'-0" | W10 x 19<br>6'-6"/5'-0" | W10 x 19<br>6'-6"/5'-0" | W10 x 19<br>6'-6"/5'-0" | W10 x 19<br>6'-6"/5'-0" | W10 x 19<br>6'-6"/5'-6" | W10 x 19<br>6'-6"/5'-0" | W10 x 19<br>6'-6"/5'-6" |
| 11'- 0" | | | SEE NOTE 3 | S6 x 17.25<br>5'-6"/4'-6" | S6 x 17.25<br>5'-6"/4'-6" | S8 x 18.4<br>6'-0"/4'-6" | S8 x 18.4<br>6'-0"/4'-9" | S8 x 18.4<br>6'-0"/4'-9" | S8 x 18.4<br>6'-0"/4'-9" | S8 x 18.4<br>6'-0"/5'-0" | W10 x 19<br>6'-6"/5'-0" | W10 x 19<br>6'-6"/5'-0" | W10 x 19<br>6'-6"/5'-6" | W10 x 22<br>6'-6"/5'-6" | W10 x 19<br>6'-6"/5'-6" | W10 x 22<br>7'-0"/5'-6" | W10 x 19<br>6'-6"/5'-6" | W10 x 22<br>7'-0"/5'-6" |
| 12'- 0" | | | | S6 x 17.25<br>5'-6"/4'-6" | S8 x 18.4<br>6'-0"/4'-6" | S8 x 18.4<br>6'-0"/4'-9" | S8 x 18.4<br>6'-0"/4'-9" | S8 x 18.4<br>6'-0"/4'-9" | W10 x 19<br>6'-6"/5'-0" | W10 x 19<br>6'-6"/5'-0" | W10 x 19<br>6'-6"/5'-0" | W10 x 19<br>6'-6"/5'-6" | W10 x 22<br>7'-0"/5'-6" | W10 x 22<br>7'-0"/5'-6" | W10 x 22<br>7'-0"/5'-6" | W10 x 22<br>7'-0"/5'-6" | W10 x 22<br>7'-0"/5'-6" | W10 x 22<br>7'-0"/5'-6" |
| 13'- 0" | | | | S8 x 18.4<br>6'-0"/4'-6" | S8 x 18.4<br>6'-0"/4'-9" | S8 x 18.4<br>6'-0"/4'-9" | S8 x 18.4<br>6'-6"/4'-9" | W10 x 19<br>6'-6"/5'-0" | W10 x 19<br>6'-6"/5'-0" | W10 x 19<br>6'-6"/5'-6" | W10 x 22<br>7'-0"/5'-6" | W10 x 22<br>7'-0"/5'-6" | W10 x 22<br>7'-0"/5'-6" | W10 x 26<br>7'-0"/5'-6" | W10 x 26<br>7'-0"/5'-6" | W10 x 26<br>7'-6"/5'-6" | W10 x 26<br>7'-0"/5'-6" | W10 x 26<br>7'-6"/5'-6" |
| 14'- 0" | | | | S8 x 18.4<br>6'-0"/4'-9" | S8 x 18.4<br>6'-0"/4'-9" | S8 x 18.4<br>6'-6"/4'-9" | W10 x 19<br>6'-6"/5'-0" | W10 x 19<br>6'-6"/5'-0" | W10 x 19<br>7'-0"/5'-6" | W10 x 22<br>7'-0"/5'-6" | W10 x 22<br>7'-0"/5'-6" | W10 x 22<br>7'-0"/5'-6" | W10 x 26<br>7'-6"/5'-6" | W10 x 26<br>7'-6"/6'-0" | W10 x 26<br>7'-6"/5'-6" | W10 x 30<br>7'-6"/6'-0" | W10 x 26<br>7'-6"/5'-6" | W10 x 30<br>7'-6"/6'-0" |
| 15'- 0" | | | | S8 x 18.4<br>6'-0"/4'-9" | S8 x 18.4<br>6'-6"/4'-9" | W10 x 19<br>6'-6"/5'-0" | W10 x 19<br>7'-0"/5'-0" | W10 x 22<br>7'-0"/5'-6" | W10 x 22<br>7'-0"/5'-6" | W10 x 22<br>7'-0"/5'-6" | W10 x 26<br>7'-6"/5'-6" | W10 x 26<br>7'-6"/5'-6" | W10 x 26<br>7'-6"/5'-6" | W10 x 30<br>7'-6"/6'-6" | W10 x 30<br>7'-6"/6'-0" | W10 x 30<br>8'-0"/6'-0" | W10 x 30<br>7'-6"/6'-0" | W10 x 30<br>8'-0"/6'-0" |
| 16'- 0" | | | | S8 x 18.4<br>6'-6"/5'-6" | W10 x 19<br>6'-6"/5'-6" | W10 x 19<br>7'-0"/6'-0" | W10 x 22<br>7'-0"/6'-0" | W10 x 22<br>7'-0"/6'-0" | W10 x 22<br>7'-6"/6'-0" | W10 x 26<br>7'-6"/6'-0" | W10 x 26<br>7'-6"/6'-0" | W10 x 30<br>7'-6"/6'-6" | W10 x 30<br>8'-0"/6'-6" | W10 x 30<br>8'-0"/6'-6" | W10 x 30<br>8'-0"/6'-6" | W10 x 39<br>8'-0"/6'-6" | W10 x 30<br>8'-0"/6'-6" | W10 x 39<br>8'-0"/6'-6" |
| 17'- 0" | | | | S8 x 18.4<br>6'-6"/5'-6" | W10 x 19<br>7'-0"/5'-6" | W10 x 19<br>7'-0"/6'-0" | W10 x 22<br>7'-0"/6'-0" | W10 x 22<br>7'-6"/6'-0" | W10 x 26<br>7'-6"/6'-0" | W10 x 26<br>7'-6"/6'-0" | W10 x 30<br>8'-0"/6'-6" | W10 x 30<br>8'-0"/6'-6" | W10 x 39<br>8'-0"/6'-6" | W10 x 39<br>8'-0"/6'-6" | W10 x 39<br>8'-0"/6'-6" | W10 x 39<br>8'-0"/6'-6" | W10 x 39<br>8'-0"/6'-6" | W10 x 39<br>8'-0"/6'-6" |
| 18'- 0" | | | | W10 x 19<br>7'-0"/5'-6" | W10 x 19<br>7'-0"/6'-0" | W10 x 22<br>7'-0"/6'-0" | W10 x 22<br>7'-6"/6'-0" | W10 x 26<br>7'-6"/6'-0" | W10 x 26<br>7'-6"/6'-0" | W10 x 30<br>8'-0"/6'-6" | W10 x 30<br>8'-0"/6'-6" | W10 x 39<br>8'-0"/6'-6" | W10 x 39<br>8'-6"/6'-6" | W10 x 39<br>8'-6"/6'-6" | W10 x 39<br>8'-6"/6'-6" | W10 x 39<br>8'-6"/6'-6" | W10 x 39<br>8'-6"/6'-6" | W10 x 39<br>8'-6"/6'-6" |
| 19'- 0" | | | | W10 x 19<br>7'-0"/5'-6" | W10 x 22<br>7'-0"/6'-0" | W10 x 22<br>7'-6"/6'-0" | W10 x 26<br>7'-6"/6'-0" | W10 x 26<br>8'-0"/6'-0" | W10 x 30<br>8'-0"/6'-6" | W10 x 39<br>8'-0"/6'-6" | W10 x 39<br>8'-6"/6'-6" | W10 x 39<br>8'-6"/6'-6" | W10 x 39<br>8'-6"/6'-6" | W10 x 45<br>8'-6"/7'-0" | W10 x 39<br>8'-6"/6'-6" | W10 x 45<br>8'-6"/7'-0" | W10 x 39<br>8'-6"/6'-6" | W10 x 45<br>8'-6"/7'-0" |
| 20'- 0" | | | | W10 x 19<br>7'-0"/6'-0" | W10 x 22<br>7'-6"/6'-0" | W10 x 26<br>7'-6"/6'-0" | W10 x 26<br>8'-0"/6'-0" | W10 x 30<br>8'-0"/6'-6" | W10 x 39<br>8'-0"/6'-6" | W10 x 39<br>8'-6"/6'-6" | W10 x 39<br>8'-6"/6'-6" | W10 x 39<br>8'-6"/6'-6" | W10 x 45<br>9'-0"/7'-0" | W10 x 45<br>9'-0"/7'-0" | W10 x 45<br>9'-0"/7'-0" | W10 x 45<br>9'-0"/7'-0" | W10 x 45<br>9'-0"/7'-0" | W10 x 45<br>9'-0"/7'-0" |
| 21'- 0" | | | | W10 x 22<br>7'-0"/6'-0" | W10 x 22<br>7'-6"/6'-0" | W10 x 26<br>8'-0"/6'-0" | W10 x 30<br>8'-0"/6'-6" | W10 x 39<br>8'-0"/6'-6" | W10 x 39<br>8'-6"/6'-6" | W10 x 39<br>8'-6"/6'-6" | W10 x 39<br>8'-6"/6'-6" | W10 x 45<br>9'-0"/7'-0" | W10 x 45<br>9'-0"/7'-0" | W10 x 49<br>9'-0"/7'-0" | W10 x 45<br>9'-0"/7'-0" | W10 x 49<br>9'-0"/7'-0" | W10 x 45<br>9'-0"/7'-0" | W10 x 49<br>9'-0"/7'-0" |
| 22'- 0" | | | | W10 x 22<br>7'-6"/6'-0" | W10 x 26<br>8'-0"/6'-0" | W10 x 30<br>8'-0"/6'-0" | W10 x 30<br>8'-0"/6'-6" | W10 x 39<br>8'-6"/6'-6" | W10 x 39<br>8'-6"/6'-6" | W10 x 45<br>9'-0"/7'-0" | W10 x 45<br>9'-0"/7'-0" | W10 x 45<br>9'-0"/7'-0" | W10 x 49<br>9'-6"/7'-0" | W10 x 49<br>9'-6"/7'-0" | W10 x 49<br>9'-6"/7'-0" | W10 x 49<br>9'-6"/7'-0" | W10 x 49<br>9'-6"/7'-0" | W10 x 49<br>9'-6"/7'-0" |

SEE NOTE 4

### TABLE KEY

TOP VALUE: PIPE DIAMETER (Ø) OR STRUCTURAL SHAPE

BOTTOM VALUE: MINIMUM FOUNDATION EMBEDMENT - SOFT OR LOOSE SOIL/MEDIUM SOIL

### SOIL CONDITIONS TABLE

| SOFT OR LOOSE SOIL | | MEDIUM SOIL | |
|---|---|---|---|
| COHESIVE | GRANULAR | COHESIVE | GRANULAR |
| MOIST UNIT WEIGHT = 110 PCF<br>COHESION (C) = 750 PSF<br>STRAIN FACTOR (E50) = 0.01<br>SOIL MODULUS (K) = 100 PCI | UNIT WEIGHT = 115 PCF<br>SHEAR STRENGTH = 30°<br>SOIL MODULUS (K) = 50 PCI | MOIST UNIT WEIGHT = 125 PCF<br>COHESION (C) = 1,500 PSF<br>STRAIN FACTOR (E50) = 0.007<br>SOIL MODULUS (K) = 500 PCI | UNIT WEIGHT = 125 PCF<br>SHEAR STRENGTH = 34°<br>SOIL MODULUS (K) = 90 PCI |

**NOTES:**

1. SEE STD DWG SN 15B1 FOR GENERAL NOTES.
2. USE THE HIGHER VALUES WHEN SIGN HEIGHT OR WIDTH FALLS BETWEEN TWO VALUES.
3. USE OF Z-BAR IS PERMITTED FOR SIGN APPLICATIONS WITHIN NOTE 3 AREA, SEE STD DWG SN 8. DO NOT USE Z-BAR FOR MULTIPANEL SIGN APPLICATIONS.
4. USE SOLID POSTS (NON-BREAKAWAY) WITHIN NOTE 4 AREA. PLACE W10 X 39 AND LARGER POSTS BEHIND BARRIER AND OUTSIDE BARRIER LENGTH OF NEED.
5. USE EMBEDMENT VALUES FOR SOFT OR LOOSE SOIL CONDITIONS UNLESS OTHERWISE SHOWN.

**DESIGN-ONLY NOTES:**

A. USE EMBEDMENTS FOR SOFT OR LOOSE SOIL CONDITIONS UNLESS GEOTECHNICAL ENGINEER RECOMMENDS THAT THE SITE MEETS OR EXCEEDS THE MEDIUM SOIL CONDITIONS.

B. SOLID (NON-BREAKAWAY) POSTS SHOULD BE USED WHEN SIGN IS PROTECTED FROM VEHICLE IMPACTS BY PLACEMENT BEHIND BARRIER AND OUTSIDE THE LENGTH OF NEED.

SUPPLEMENTAL DRAWING

REVISIONS

| NO. | DATE | APPR. | REMARKS |
|---|---|---|---|
| 1 | 2/22/18 | CGW | ADDED MISSING NOTE 3 REFERENCE TO TABLE AND UPDATED NOTE 4. |
| 2 | 2/28/19 | JW | ADDED SOLID POST REQUIREMENT REFERENCE TO TABLE. |
| 2 | 2/28/19 | JW | ADDED NEW NOTE 4, RENUMBERED NOTE 4 TO 5. |

UTAH DEPARTMENT OF TRANSPORTATION
STANDARD DRAWINGS FOR ROAD AND BRIDGE CONSTRUCTION
SALT LAKE CITY, UTAH

RECOMMENDED FOR APPROVAL — FEB. 28, 2019 DATE

CHAIRMAN STANDARDS COMMITTEE APPROVED — FEB. 28, 2019 DATE

DEPUTY DIRECTOR

STANDARD DRAWING TITLE: FREEWAY SIGN POST AND FOUNDATION REQUIREMENTS

STD. DWG. NO. SN 15B2

DGN File:L:\Standard_Drawings\Imperial\2017 Approved_Supplemental_Issues\Supp8Approved Feb - 2019\Backup1\SN15B2.dgn
MAR-2019

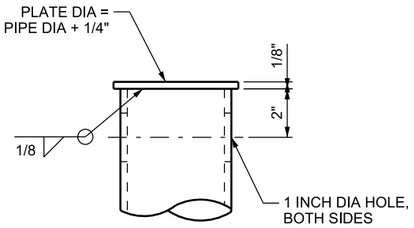


## TOP OF PIPE DETAIL

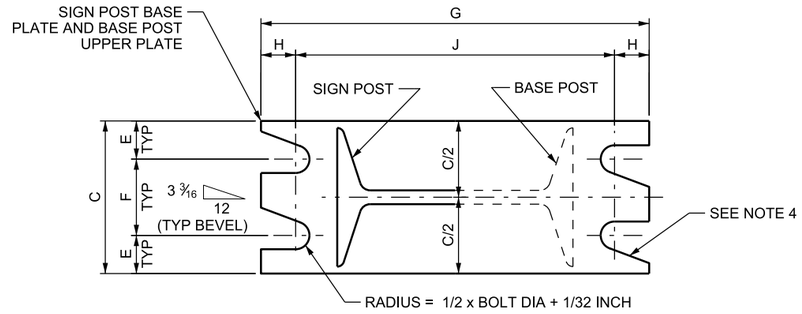


## SECTION A - A

BASE POST B6B SHOWN,
B6A AND B6C SIMILAR

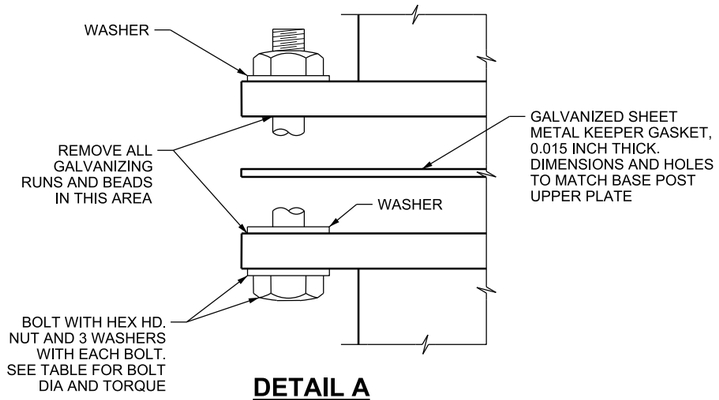


## DETAIL A

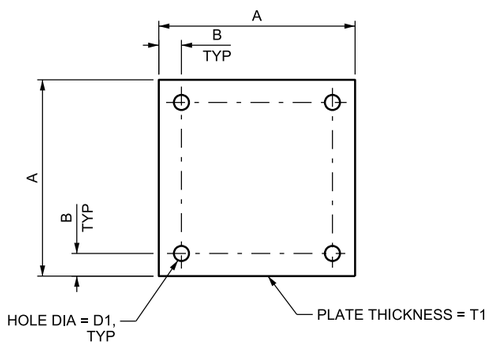


## BASE POST BOTTOM PLATE DETAIL

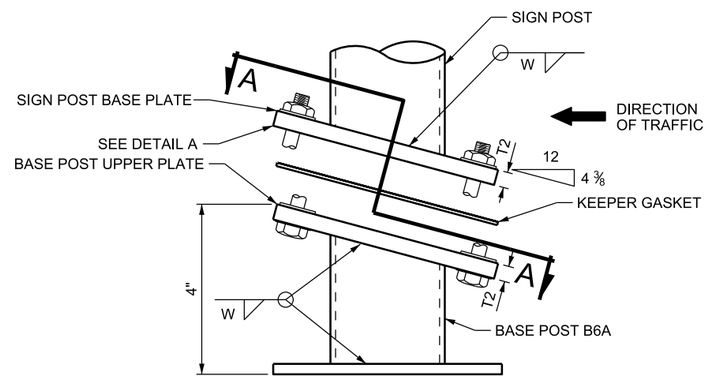


## BASE POST B6A ELEVATION

SEE NOTE 5

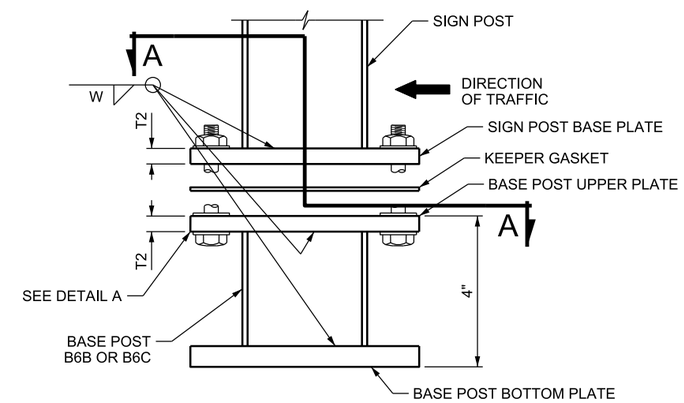


## BASE POST B6B AND B6C ELEVATION

BASE CONNECTION TABLE

| POST SIZE | BASE POST | BASE POST BOTTOM PLATE | | | | | BASE POST UPPER PLATE AND SIGN POST BASE PLATE | | | | | | | | |
|---|---|---|---|---|---|---|---|---|---|---|---|---|---|---|---|
| | | ANCHOR BOLT | A | B | D1 | T1 | BOLT SIZE AND TORQUE | C | E | F | G | H | J | T2 | W |
| 3" DIA STD PIPE | B6A | 7/8" DIA x 2'- 6" | 7 1/2" | 1 1/2" | 1" | 3/4" | 1/2" DIA x 2 1/2" 10 FT-LB TORQUE | 4 1/2" | 1" | 2 1/2" | 7 1/2" | 3/4" | 6" | 3/4" | 1/4" |
| 4" DIA STD PIPE | | 7/8" DIA x 2'- 6" | 8 1/2" | 1 1/2" | 1" | 7/8" | | 5 1/2" | 1" | 3 1/2" | 8 1/2" | 3/4" | 7" | 3/4" | 1/4" |
| 5" DIA STD PIPE | | 7/8" DIA x 2'- 6" | 10 1/2" | 1 3/4" | 1" | 1" | 5/8" DIA x 3 1/2" 24 FT-LB TORQUE | 6 1/2" | 1 1/4" | 4" | 10 1/4" | 7/8" | 8 1/2" | 1" | 1/4" |
| 6" DIA STD PIPE | | | 10 1/2" | 1 3/4" | 1" | 1" | | 7 1/2" | 1 1/4" | 5" | 11 1/2" | 7/8" | 9 3/4" | 1" | 5/16" |
| 8" DIA STD PIPE | | 7/8" DIA x 2'- 6" | 1'- 0 1/2" | 2" | 1" | 1 1/4" | | 9 1/2" | 1 1/4" | 7" | 1'- 2" | 7/8" | 1'- 0 1/4" | 1" | 5/16" |
| S3 x 5.7 | B6B | 7/8" DIA x 2'- 6" | 7 1/2" | 1 1/2" | 1" | 3/4" | 1/2" DIA x 2 1/2" 10 FT-LB TORQUE | 3" | 3/4" | 1 1/2" | 7 1/2" | 3/4" | 6" | 5/8" | 3/16" |
| S4 x 9.5 | | 7/8" DIA x 2'- 6" | 8 1/2" | 1 1/2" | 1" | 7/8" | | 3 1/2" | 3/4" | 2" | 7 1/2" | 3/4" | 6" | 5/8" | 1/4" |
| S6 x 12.5 | | 7/8" DIA x 2'- 6" | 10 1/2" | 1 3/4" | 1" | 1" | 5/8" DIA x 3" 24 FT-LB TORQUE | 4 1/2" | 1 1/8" | 2 1/4" | 10" | 3/4" | 8 1/2" | 3/4" | 5/16" |
| S6 x 17.25 | | 7/8" DIA x 2'- 6" | 10 1/2" | 1 3/4" | 1" | 1" | | 4 1/2" | 1 1/8" | 2 1/4" | 10" | 3/4" | 8 1/2" | 3/4" | 5/16" |
| S8 x 18.4 | | 7/8" DIA x 2'- 6" | 1'- 0 1/2" | 2" | 1" | 1 1/4" | | 5" | 1 1/8" | 2 3/4" | 12" | 3/4" | 10 1/2" | 3/4" | 5/16" |
| W10 x 19 | B6C | 1 1/4" DIA x 2'- 6" | 1'- 3" | 2 1/4" | 1 3/8" | 1 3/4" | 3/4" DIA x 3 1/2" 38 FT-LB TORQUE | 6" | 1 1/4" | 3 1/2" | 1'- 2 1/2" | 7/8" | 1'- 0 3/4" | 1" | 5/16" |
| W10 x 22 | | 1 1/4" DIA x 2'- 6" | 1'- 3" | 2 1/4" | 1 3/8" | 1 3/4" | | 7" | 1 1/2" | 4" | 1'- 3" | 7/8" | 1'- 1 1/4" | 1" | 5/16" |
| W10 x 26 | | 1 1/4" DIA x 2'- 6" | 1'- 3" | 2 1/4" | 1 3/8" | 1 3/4" | | 7" | 1 1/2" | 4" | 1'- 3" | 7/8" | 1'- 1 1/4" | 1" | 5/16" |
| W10 x 30 | | 1 1/4" DIA x 2'- 6" | 1'- 3" | 2 1/4" | 1 3/8" | 1 3/4" | 1" DIA x 3 1/2" 55 FT-LB TORQUE | 7" | 1 1/2" | 4" | 1'- 3" | 7/8" | 1'- 1 1/4" | 1 1/8" | 5/16" |
| W10 x 39 | | 1 1/4" DIA x 2'- 6" | 1'- 5 1/2" | 2 1/2" | 1 3/8" | 1 3/4" | | 9" | 1 3/4" | 5 1/2" | 1'- 3" | 7/8" | 1'- 1 1/4" | 1 1/8" | 5/16" |
| W10 x 45 | | 1 1/4" DIA x 2'- 6" | 1'- 5 1/2" | 2 1/2" | 1 3/8" | 1 3/4" | | 9" | 1 3/4" | 5 1/2" | 1'- 3" | 7/8" | 1'- 1 1/4" | 1 1/8" | 5/16" |
| W10 x 49 | | 1 1/4" DIA x 2'- 6" | 1'- 5 1/2" | 2 1/2" | 1 3/8" | 1 3/4" | | 11" | 1 3/4 | 7 1/2" | 1'- 3" | 7/8" | 1'- 1 1/4" | 1 1/8" | 5/16" |

**NOTES:**

1. REFER TO STD DWG SN 15B1 FOR GENERAL NOTES.
2. TIGHTEN BOLTS ONLY TO THE TORQUE LIMITS SHOWN IN THE TABLE. DO NOT OVER TIGHTEN.
3. USE THE SAME SHAPE FOR SIGN POST AND BASE POST.
4. BEVELS SHOWN IN SECTION A-A ARE FOR INSTALLATIONS ON RIGHT SHOULDER AND IN GORE. BEVELS ARE OPPOSITE HAND FROM THAT SHOWN FOR INSTALLATION ON LEFT SHOULDER.
5. USE BASE POST B6A FOR PIPE POST APPLICATIONS UNLESS OTHERWISE DIRECTED BY THE ENGINEER.
6. USE ASTM F1554 STEEL FOR ANCHOR BOLTS. USE GRADE 36 UNLESS NOTED OTHERWISE. FULLY TORQUE ANCHOR BOLTS.

**DESIGN-ONLY NOTES:**

A. DO NOT USE INCLINE BASE WHERE THERE IS A POTENTIAL OF A BACKSIDE IMPACT.

SUPPLEMENTAL DRAWING

REVISIONS

| NO. | DATE | APPR. | REMARKS |
|---|---|---|---|
| 1 | 2/28/2019 | JW | MODIFIED PLATE AND BOLT DIMENSIONS. |

UTAH DEPARTMENT OF TRANSPORTATION
STANDARD DRAWINGS FOR ROAD AND BRIDGE CONSTRUCTION
SALT LAKE CITY, UTAH

RECOMMENDED FOR APPROV. — FEB. 28, 2019 DATE
CHAIRMAN STANDARDS COM APPROVED — FEB. 28, 2019 DATE
DEPUTY DIRECTOR

STANDARD DRAWING TITLE
FREEWAY SIGN BASE POST REQUIREMENTS (B6A, B6B, AND B6C)

STD. DWG. NO.
SN 15C

DGN File: L:\Standard_Drawings\Imperial\2017 Approved_Supplemental_Issues\Supp8Approved Feb - 2019\Backup1\SN15C.dgn
04-MAR-2019

| FUSE PLATE AND SPLICE PLATE TABLE | | | | | | | | | | | | |
|---|---|---|---|---|---|---|---|---|---|---|---|---|
| POST SIZE | K | L | M | N | P | Q | R | S | D2 | D3 | T3 | BOLT SIZE |
| S3 x 5.7 | 3 1/2" | 2 1/4" | 5/8" | 2 3/8" | 1 1/2" | 7/16" | 11/32" | 9/16" | 5/8" | 3/8" | 1/4" | 1/2" |
| S4 x 9.5 | 4 1/4" | 2 1/4" | 1" | 2 5/8" | 1 1/2" | 9/16" | 15/32" | 9/16" | 5/8" | 3/8" | 5/16" | 1/2" |
| S6 x 12.5 | 4 3/4" | 2 1/2" | 1 1/8" | 4" | 2" | 1" | 1/2" | 1" | 5/8" | 3/4" | 3/8" | 1/2" |
| S6 x 17.25 | 4 3/4" | 2 1/2" | 1 1/8" | 4" | 2" | 1" | 1/2" | 1" | 3/4" | 3/4" | 3/8" | 5/8" |
| S8 x 18.4 | 5" | 2 1/2" | 1 1/4" | 5 1/4" | 2 1/4" | 1 1/2" | 3/4" | 1 1/4" | 7/8" | 1 1/8" | 3/8" | 3/4" |
| W10 x 19 | 6" | 3" | 1 1/2" | 5 3/4" | 2 1/4" | 1 3/4" | 13/16" | 1 3/8" | 7/8" | 1 1/8" | 3/8" | 3/4" |
| W10 x 22 | 6" | 3" | 1 1/2" | 5 3/4" | 3 3/4" | 1" | 13/16" | 1 3/8" | 1" | 1 1/8" | 3/8" | 7/8" |
| W10 x 26 | 6" | 3" | 1 1/2" | 5 3/4" | 3 3/4" | 1" | 13/16" | 1 3/8" | 1" | 1 1/8" | 1/2" | 7/8" |
| W10 x 30 | 6" | 3" | 1 1/2" | 5 3/4" | 3 3/4" | 1" | 13/16" | 1 3/8" | 1" | 1 1/8" | 1/2" | 7/8" |
| W10 x 39 | USE SOLID (NON-BREAKAWAY) POSTS. PLACE W10 X 39 AND LARGER POSTS BEHIND BARRIER AND OUTSIDE BARRIER LENGTH OF NEED. | | | | | | | | | | | |
| W10 x 45 | | | | | | | | | | | | |
| W10 x 49 | | | | | | | | | | | | |

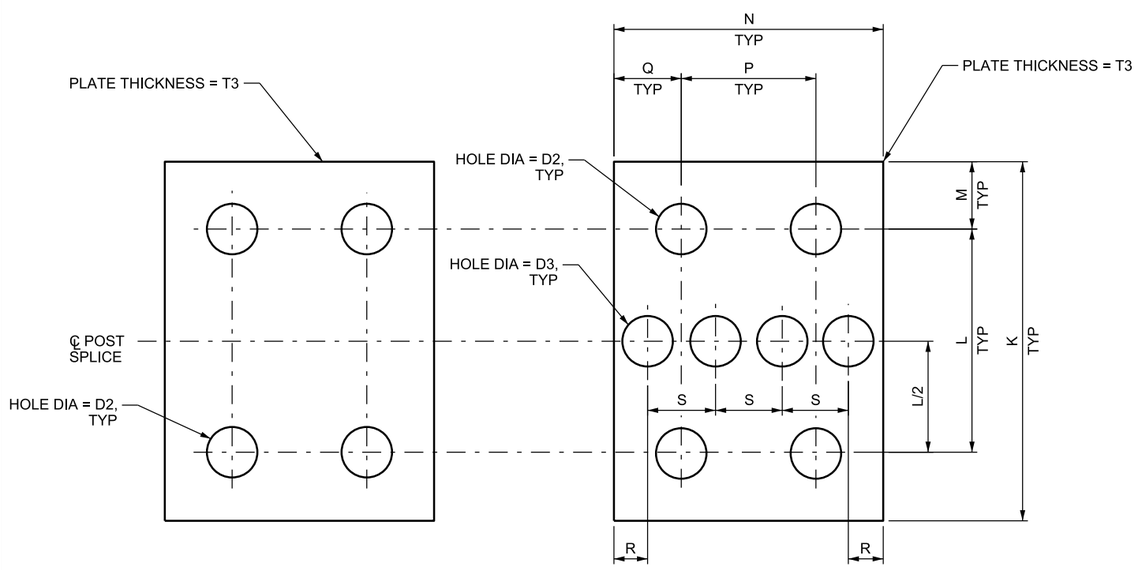


**SPLICE PLATE (REAR) DETAIL** **FUSE PLATE (FRONT) DETAIL**

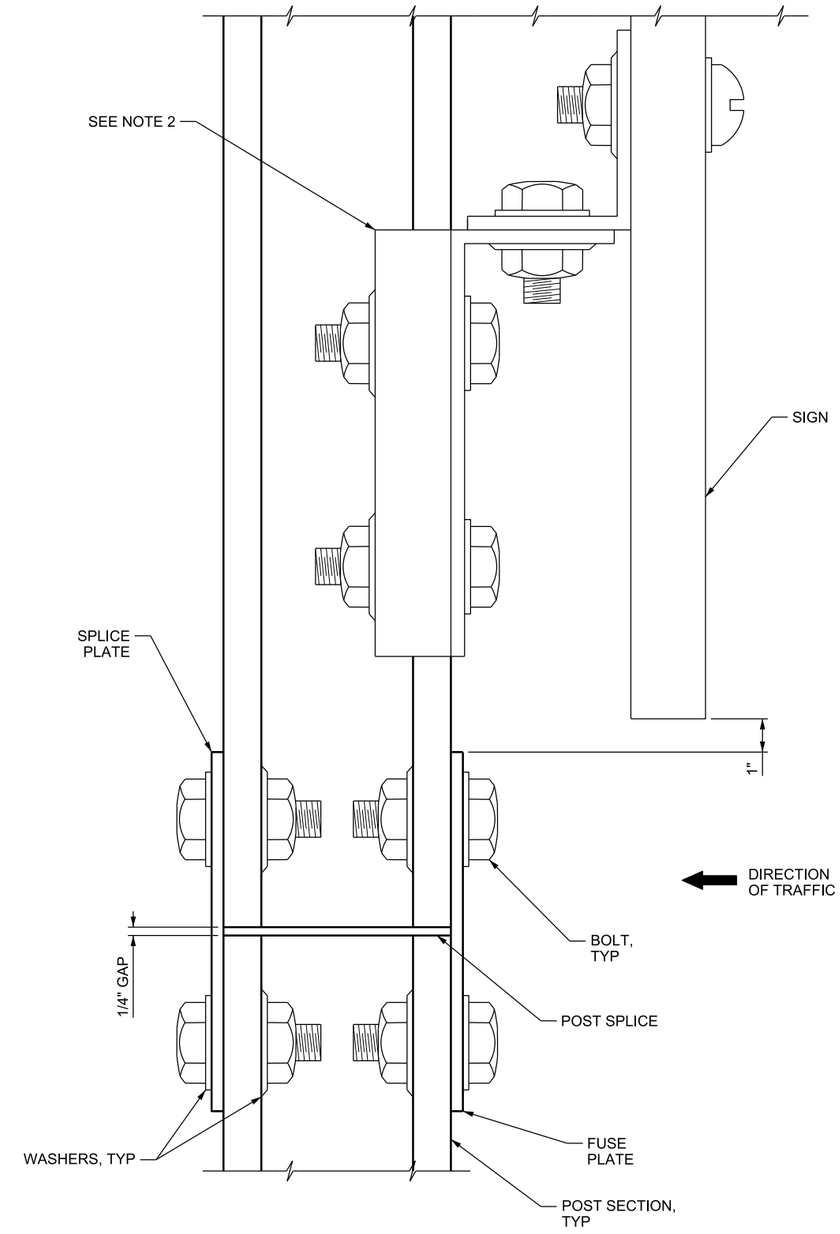


**POST BREAK-AWAY ASSEMBLY**

**NOTES:**

1. REFER TO STD DWG SN 15B1 FOR GENERAL NOTES.
2. SEE BRACKET DETAIL ON STD DWG SN 15A OR STD DWG SN 9A FOR Z-BAR DETAILS.

SUPPLEMENTAL DRAWING

REVISIONS

| NO. | DATE | APPR. | REMARKS |
|---|---|---|---|
| 1 | 2/28/2019 | JW | MODIFIED FUSE PLATE INFORMATION. |

**UTAH DEPARTMENT OF TRANSPORTATION**
STANDARD DRAWINGS FOR ROAD AND BRIDGE CONSTRUCTION
SALT LAKE CITY, UTAH

RECOMMENDED FOR APPRC — FEB. 28, 2019 DATE
CHAIRMAN STANDARDS COMMITTEE APPROVED — FEB. 28, 2019 DATE
DEPUTY DIRECTOR

STANDARD DRAWING TITLE
FREEWAY SIGN FUSE PLATE REQUIREMENTS

STD. DWG. NO.
SN 15E

DGN File: L:\Standard_Drawings\Imperial\2017 Approved_Supplemental_Issues\SuppApproved Feb - 2019\Backup1\SN15E.dgn
04-MAR-2019

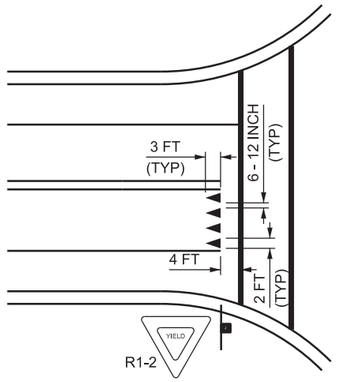


## TYPICAL YIELD LINE

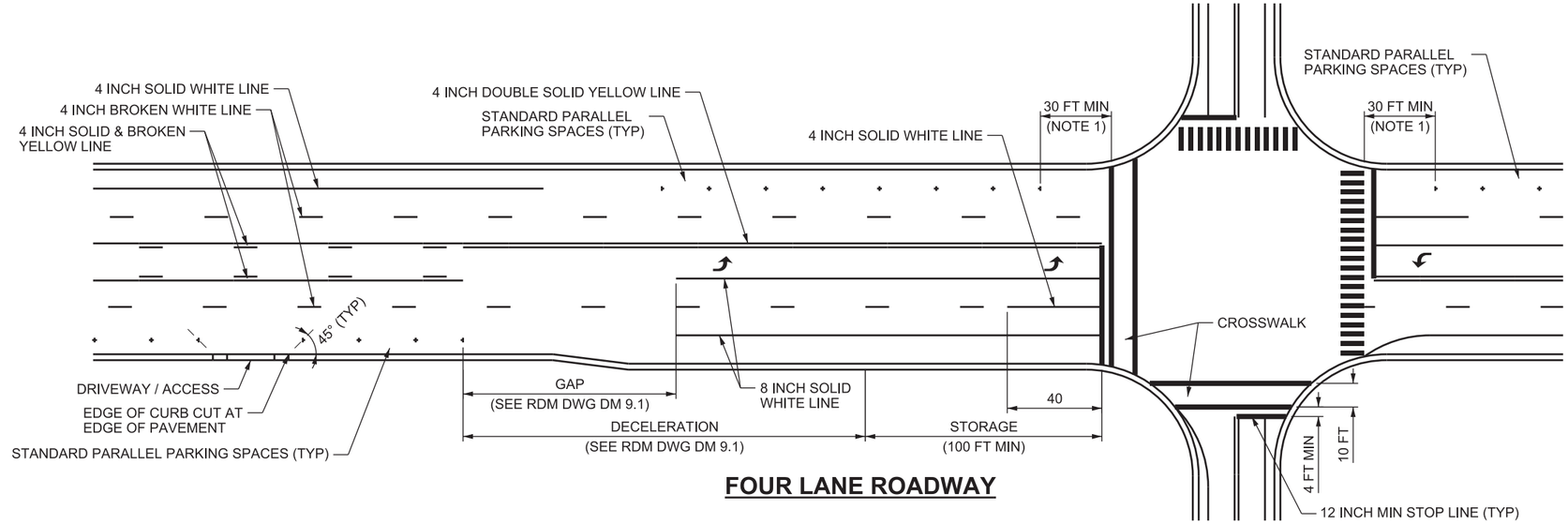


## FOUR LANE ROADWAY

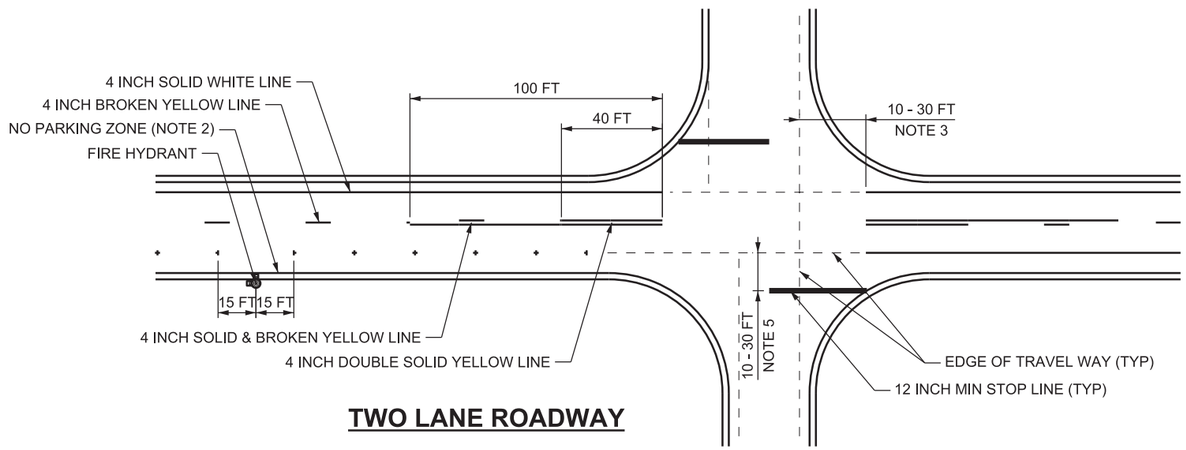


## TWO LANE ROADWAY

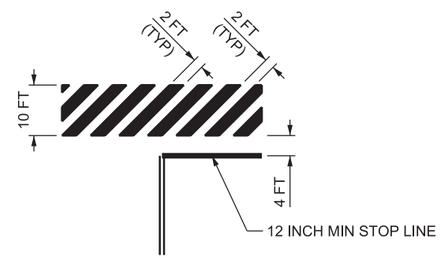


## SPECIAL EMPHASIS CROSSWALK

SOLID WHITE DIAGONAL LINES AT 45° TO DIRECTION OF TRAVEL

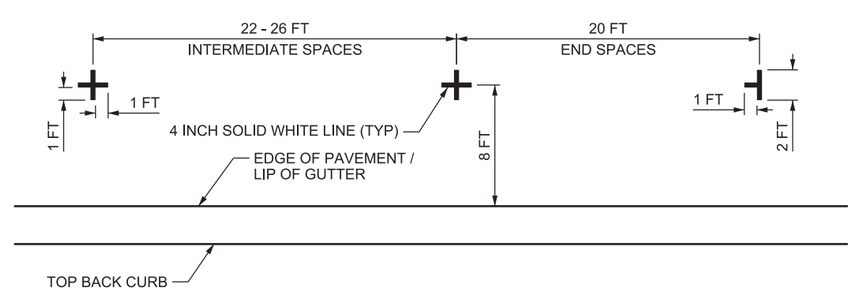


## STANDARD PARALLEL PARKING

**NOTES:**

1. ESTABLISH A "NO PARKING" ZONE 30 FT PRIOR TO FLASHING SIGNAL, STOP SIGN, YIELD SIGN, OR SIGNAL.
2. RED CURB MARKING IS OPTIONAL FOR "NO PARKING" ZONE.
3. PLACE STOP LINE 10-30 FT AWAY FROM THE EDGE OF TRAVEL WAY OF THE CROSS TRAFFIC TO ACCOMMODATE TURNING VEHICLES AND PROVIDE PROPER INTERSECTION SIGHT DISTANCE.

SUPPLEMENTAL DRAWING

REVISIONS

| NO. | DATE | APPR. | REMARKS |
|---|---|---|---|
| 1 | 2/28/19 | CGW | REMOVED PARKING LOT STRIPING AND UPDATED NOTES |

**UTAH DEPARTMENT OF TRANSPORTATION**
STANDARD DRAWINGS FOR ROAD AND BRIDGE CONSTRUCTION
SALT LAKE CITY, UTAH

RECOMMENDED FOR APPROVAL — FEB. 28, 2019 DATE
CHAIRMAN STANDARDS COMMITTEE APPROVED — FEB. 28, 2019 DATE
DEPUTY DIRECTOR

CROSSWALKS, PARKING, AND INTERSECTION APPROACHES
STANDARD DRAWING TITLE

STD. DWG. NO.
ST 7

DGN File:L:\Standard Drawings\Imperial\2017 Approved_Supplemental Issues\Supp8Approved Feb - 2019\Backup\ST07.dgn
01-APR-2019

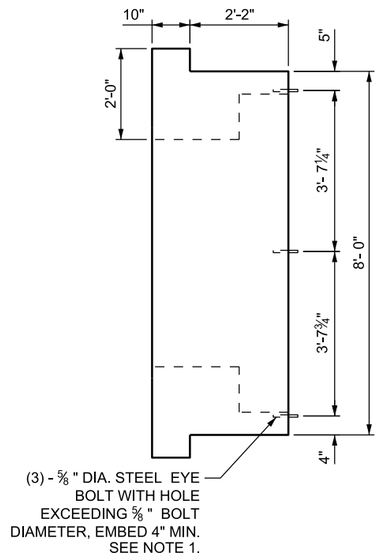


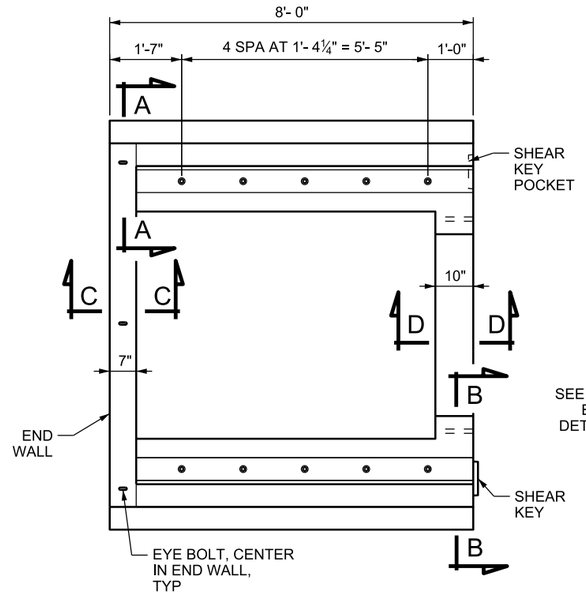


## 8'-0" END UNIT

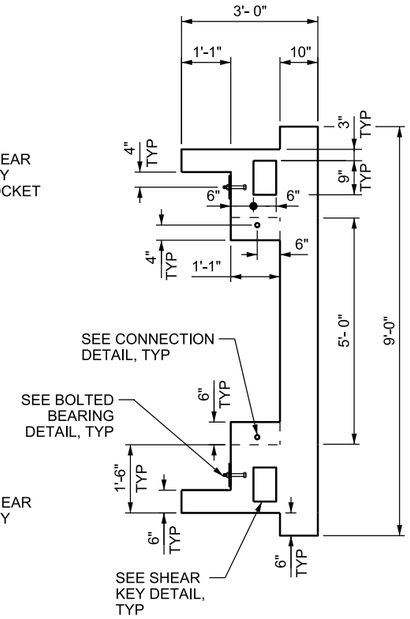


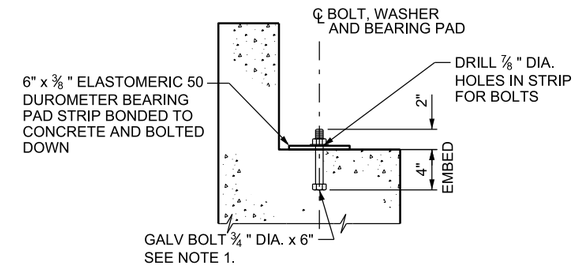


## BOLTED BEARING DETAIL

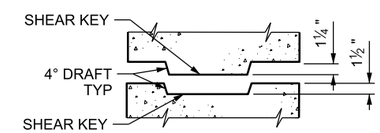


## SHEAR KEY DETAIL

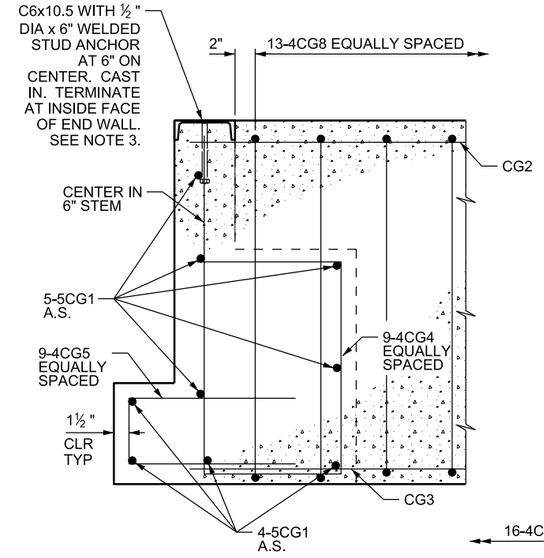


## SECTION A-A

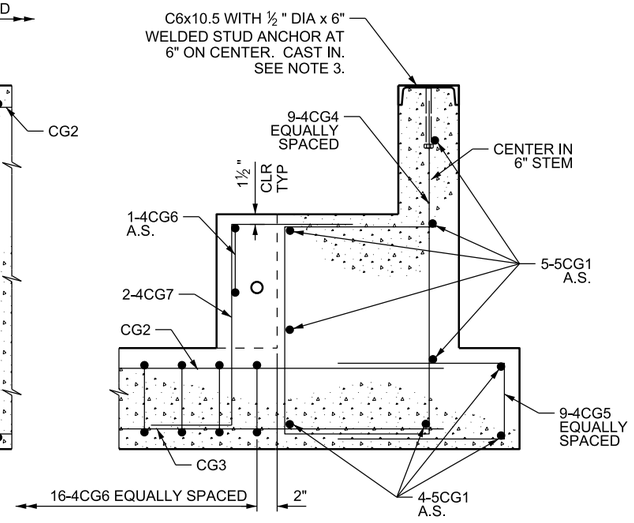


## SECTION B-B

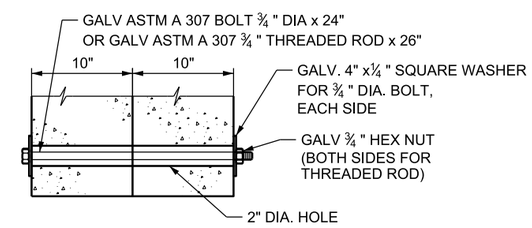


## CONNECTION DETAIL

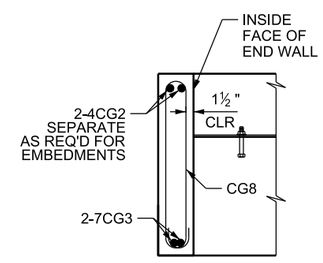


## SECTION C-C

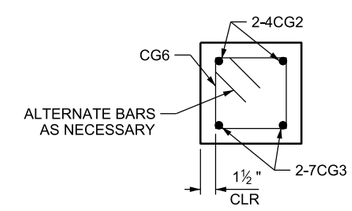


## SECTION D-D

**NOTES:**

1. FERRULE LOOP INSERTS SIZED FOR A BOLT OF EQUIVALENT DIAMETER TO THAT SHOWN MAY BE USED INSTEAD OF EMBEDDED BOLTS. FABRICATOR TO INCLUDE ASSOCIATED BOLT, OR EYE BOLT, OF LENGTH APPROPRIATE FOR FERRULE.
2. PROVIDE EMBEDDED LIFTING DEVICES CAPABLE OF SUPPORTING 20,000 LB MINIMUM TO LIFT THE PRECAST CATTLE GUARD UNIT INTO ITS FINAL POSITION.
3. WEEPHOLES ARE PERMITTED IN THE CHANNEL SECTION TO RELEASE ENTRAPPED AIR.

## REINFORCING STEEL SCHEDULE FOR END UNIT

| MARK | LOCATION | SIZE | REQ'D | LENGTH | TOTAL | SKETCH |
|---|---|---|---|---|---|---|
| CG1 | CATTLE GUARD | 5 | 18 | 7'-8" | 138'-0" | |
| CG2 | CATTLE GUARD | 4 | 4 | 7'-8" | 30'-8" | |
| CG3 | CATTLE GUARD | 7 | 4 | 7'-8" | 30'-8" | |
| CG4 | CATTLE GUARD | 4 | 18 | 6'-8" | 120'-0" | |
| CG5 | CATTLE GUARD | 4 | 18 | 3'-5" | 61'-6" | |

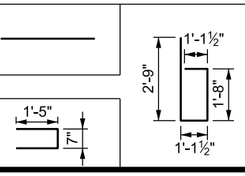


| MARK | LOCATION | SIZE | REQ'D | LENGTH | TOTAL | SKETCH |
|---|---|---|---|---|---|---|
| CG6 | CATTLE GUARD | 4 | 16 | 3'-1" | 49'-4" | 135° STD. HOOK |
| CG7 | CATTLE GUARD | 4 | 4 | 3'-6" | 14'-0" | 90° STD. HOOK |
| CG8 | CATTLE GUARD | 4 | 13 | 6'-10" | 88'-10" | 180° STD. HOOK |

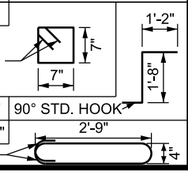


## STRUCTURAL STEEL PER UNIT

| ITEM | REQ'D | SIZE | LENGTH |
|---|---|---|---|
| CHANNEL | 2 | C6x10.5 | 7'- 5" |
| STUD ANCHOR | 30 | ½ " DIA | 0'- 6" |

SUPPLEMENTAL DRAWING

REVISIONS

| NO. | DATE | APPR. | REMARKS |
|---|---|---|---|
| 2 | 2/28/19 | JWC | REVISED LENGTH OF CG4 BAR |
| 1 | 10/25/18 | JWC | COMPLETE REVISION TO CATTLE GUARD |

**UTAH DEPARTMENT OF TRANSPORTATION**
STANDARD DRAWINGS FOR ROAD AND BRIDGE CONSTRUCTION
SALT LAKE CITY, UTAH

RECOMMENDED FOR APPROVAL — FEB.28, 2019 DATE
CHAIRMAN STANDARDS COMM. APPROVED — FEB.28, 2019 DATE
DEPUTY DIRECTOR — DATE

STANDARD DRAWING TITLE: 8'-0" PRECAST CONCRETE CATTLE GUARD END UNIT

STD. DWG. NO. SW 1B

DGN File:L:\Standard_Drawings\Imperial\2017 Approved_Supplemental_Issues\SuppApproved Feb - 2019\Backup1\SW01B.dgn
04-MAR-2019

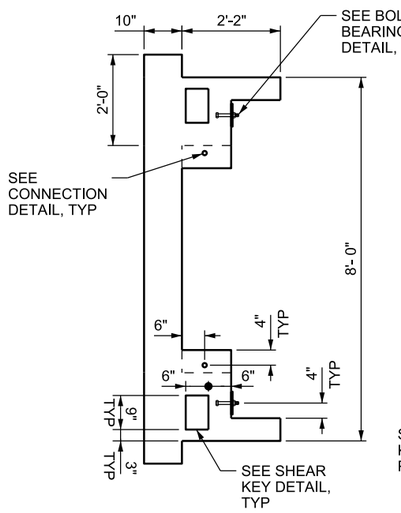


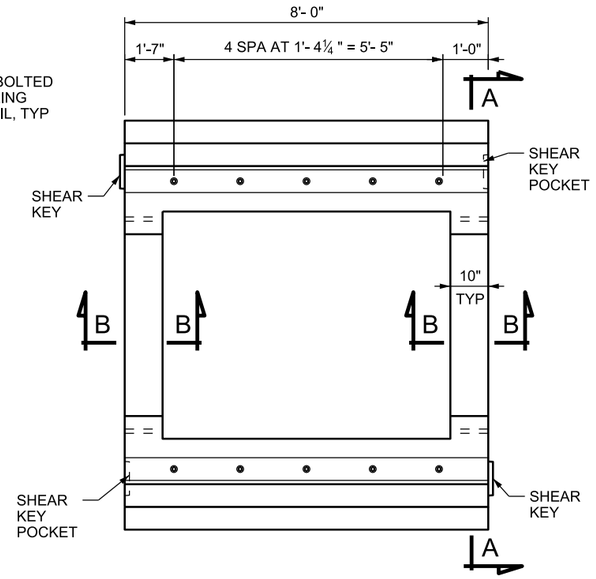


## 8'-0" CENTER UNIT

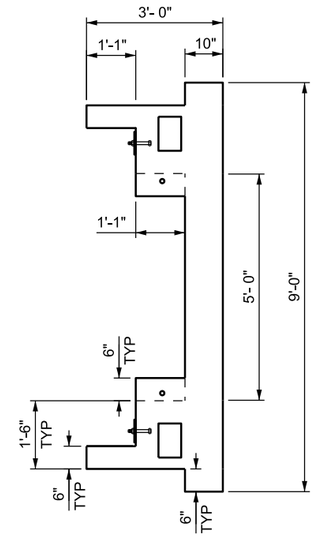


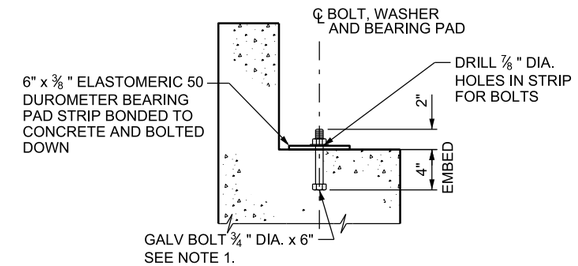


## BOLTED BEARING DETAIL

## SHEAR KEY DETAIL

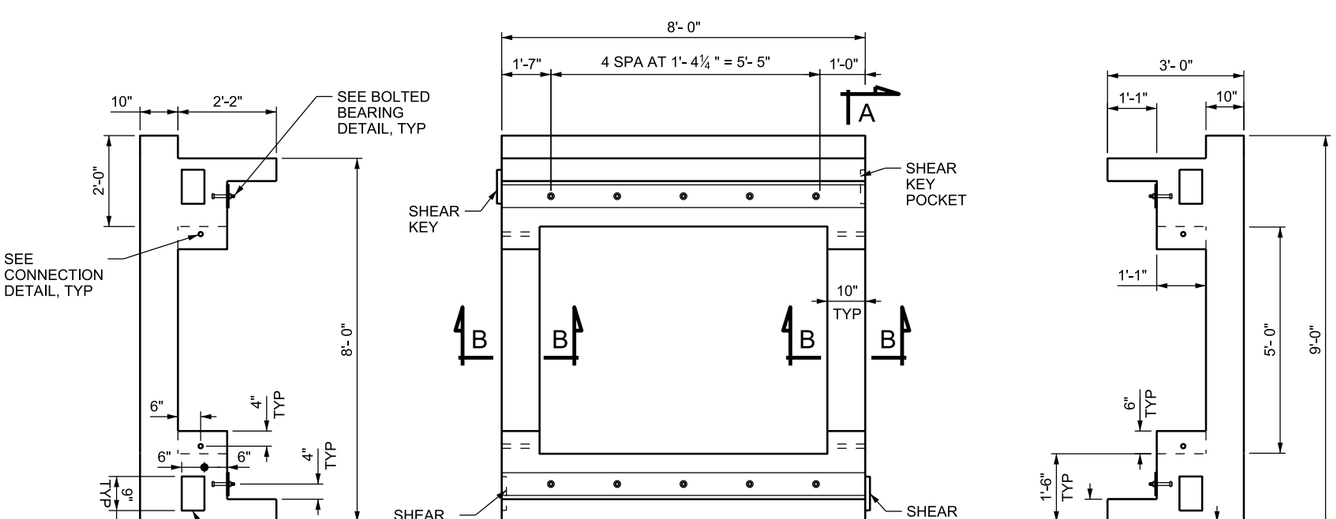


## SECTION A-A

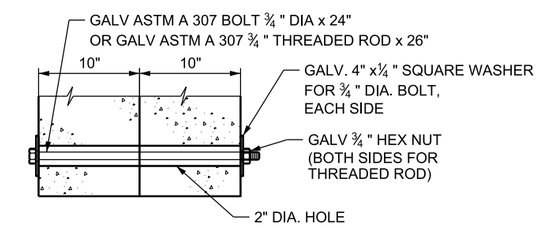


## CONNECTION DETAIL

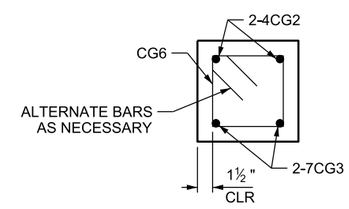


## SECTION B-B

**NOTES:**

1. FERRULE LOOP INSERTS SIZED FOR A BOLT OF EQUIVALENT DIAMETER TO THAT SHOWN MAY BE USED INSTEAD OF EMBEDDED BOLTS. FABRICATOR TO INCLUDE ASSOCIATED BOLT, OR EYE BOLT, OF LENGTH APPROPRIATE FOR FERRULE.
2. PROVIDE EMBEDDED LIFTING DEVICES CAPABLE OF SUPPORTING 20,000 LB MINIMUM TO LIFT THE PRECAST CATTLE GUARD UNIT INTO ITS FINAL POSITION.
3. WEEPHOLES ARE PERMITTED IN THE CHANNEL SECTION TO RELEASE ENTRAPPED AIR.

## REINFORCING STEEL SCHEDULE FOR CENTER UNIT

| MARK | LOCATION | SIZE | REQ'D | LENGTH | TOTAL | SKETCH |
|---|---|---|---|---|---|---|
| CG1 | CATTLE GUARD | 5 | 18 | 7'-8" | 138'-0" | |
| CG2 | CATTLE GUARD | 4 | 4 | 7'-8" | 30'-8" | |
| CG3 | CATTLE GUARD | 7 | 4 | 7'-8" | 30'-8" | |
| CG4 | CATTLE GUARD | 4 | 18 | 6'-8" | 120'-0" | 1'-1½" 2'-9" 1'-8" 1'-1½" |
| CG5 | CATTLE GUARD | 4 | 18 | 3'-5" | 61'-6" | 1'-5" 7" |
| CG6 | CATTLE GUARD | 4 | 32 | 3'-1" | 98'-8" | 135° STD. HOOK 7" 7" |
| CG7 | CATTLE GUARD | 4 | 8 | 3'-6" | 28'-0" | 90° STD. HOOK 1'-2" 1'-8" |

## STRUCTURAL STEEL PER UNIT

| ITEM | REQ'D | SIZE | LENGTH |
|---|---|---|---|
| CHANNEL | 2 | C6x10.5 | 8'- 0" |
| STUD ANCHOR | 32 | ½ " DIA | 0'- 6" |

SUPPLEMENTAL DRAWING

REVISIONS

| NO. | DATE | APPR. | REMARKS |
|---|---|---|---|
| 2 | 2/28/19 | JWC | REVISED LENGTH OF CG4 BAR |
| 1 | 10/25/18 | JWC | COMPLETE REVISION TO CATTLE GUARD |

**UTAH DEPARTMENT OF TRANSPORTATION**
STANDARD DRAWINGS FOR ROAD AND BRIDGE CONSTRUCTION
SALT LAKE CITY, UTAH

RECOMMENDED FOR APPROVAL — FEB. 28, 2019 DATE
CHAIRMAN STANDARDS CC APPROVED — FEB. 28, 2019 DATE
DEPUTY DIRECTOR

STANDARD DRAWING TITLE: 8'-0" PRECAST CONCRETE CATTLE GUARD CENTER UNIT

STD. DWG. NO. SW 1C

DGN File:L:\Standard_Drawings\Imperial\2017 Approved_Supplemental_Issues\SuppApproved Feb - 2019\Backup1\SW01C.dgn
04-MAR-2019

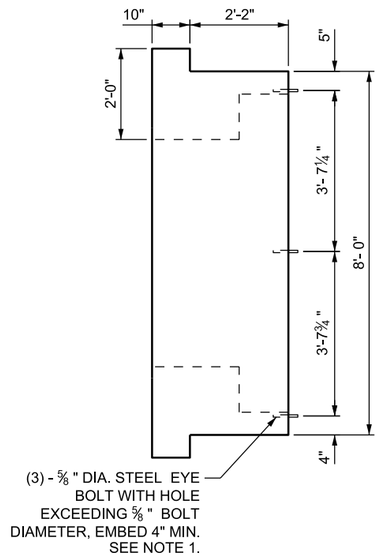


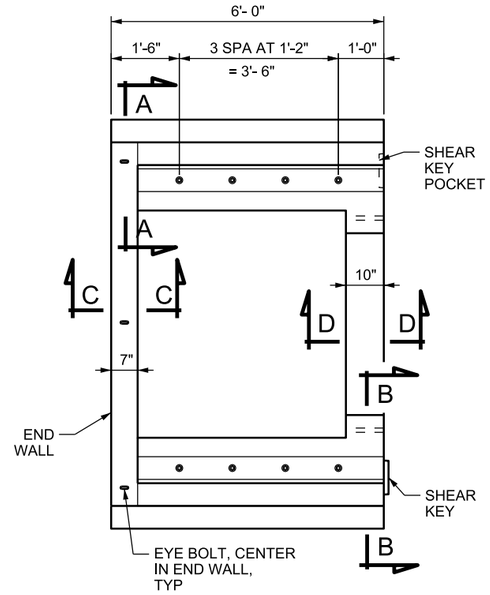


## 6'-0" END UNIT

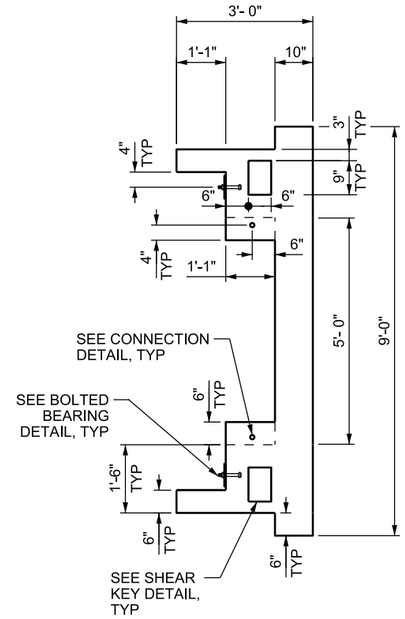


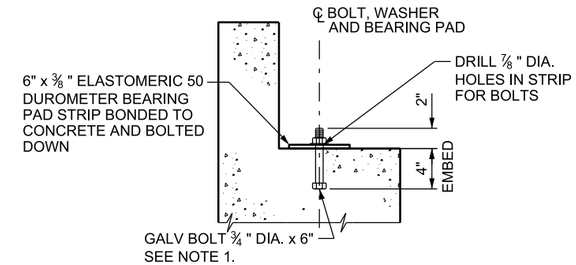


## BOLTED BEARING DETAIL

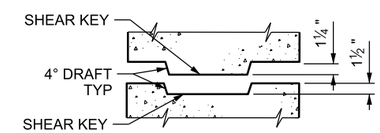


## SHEAR KEY DETAIL

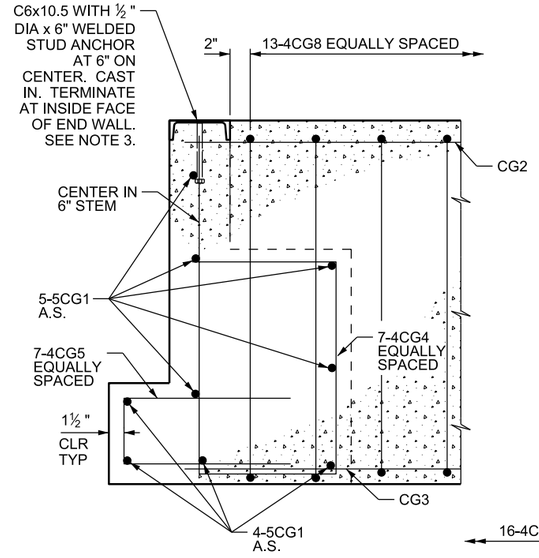


## SECTION A-A

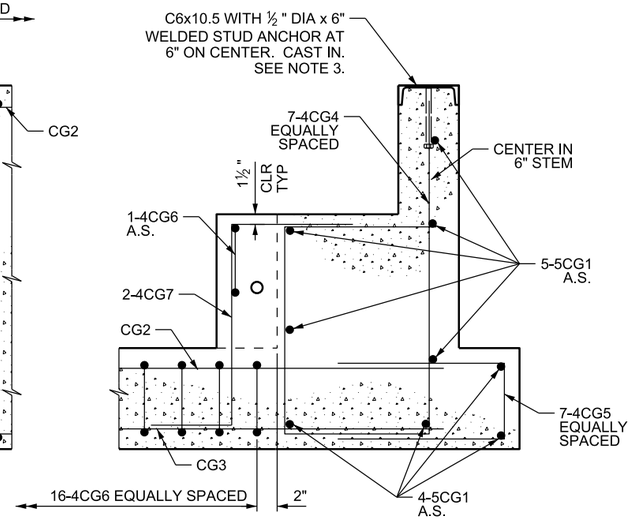


## SECTION B-B

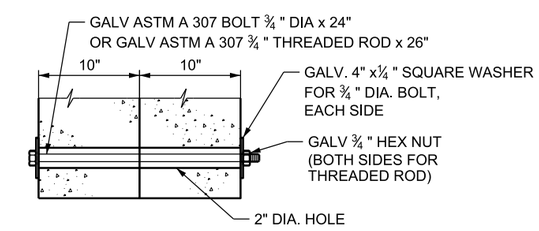


## CONNECTION DETAIL

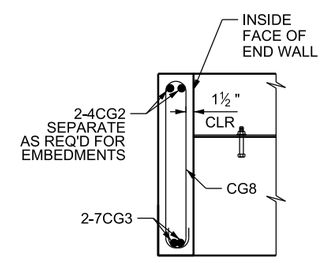


## SECTION C-C

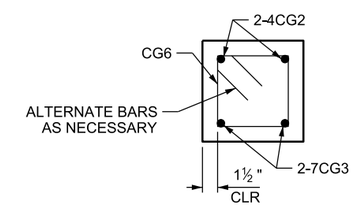


## SECTION D-D

**NOTES:**

1. FERRULE LOOP INSERTS SIZED FOR A BOLT OF EQUIVALENT DIAMETER TO THAT SHOWN MAY BE USED INSTEAD OF EMBEDDED BOLTS. FABRICATOR TO INCLUDE ASSOCIATED BOLT, OR EYE BOLT, OF LENGTH APPROPRIATE FOR FERRULE.
2. PROVIDE EMBEDDED LIFTING DEVICES CAPABLE OF SUPPORTING 20,000 LB MINIMUM TO LIFT THE PRECAST CATTLE GUARD UNIT INTO ITS FINAL POSITION.
3. WEEPHOLES ARE PERMITTED IN THE CHANNEL SECTION TO RELEASE ENTRAPPED AIR.

## REINFORCING STEEL SCHEDULE FOR END UNIT

| MARK | LOCATION | SIZE | REQ'D | LENGTH | TOTAL | SKETCH |
|---|---|---|---|---|---|---|
| CG1 | CATTLE GUARD | 5 | 18 | 7'-8" | 138'-0" | |
| CG2 | CATTLE GUARD | 4 | 4 | 7'-8" | 30'-8" | |
| CG3 | CATTLE GUARD | 7 | 4 | 7'-8" | 30'-8" | |
| CG4 | CATTLE GUARD | 4 | 14 | 6'-8" | 93'-4" | |
| CG5 | CATTLE GUARD | 4 | 14 | 3'-5" | 47'-10" | 1'-5", 7" |
| CG6 | CATTLE GUARD | 4 | 16 | 3'-1" | 49'-4" | 135° STD. HOOK (7", 7") |
| CG7 | CATTLE GUARD | 4 | 4 | 3'-6" | 14'-0" | 90° STD. HOOK (1'-2", 1'-8") |
| CG8 | CATTLE GUARD | 4 | 13 | 6'-10" | 88'-10" | 180° STD. HOOK (2'-9", 6", 4") |

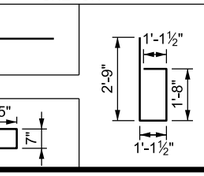


## STRUCTURAL STEEL PER UNIT

| ITEM | REQ'D | SIZE | LENGTH |
|---|---|---|---|
| CHANNEL | 2 | C6x10.5 | 5'- 5" |
| STUD ANCHOR | 22 | ½" DIA | 0'- 6" |

SUPPLEMENTAL DRAWING

REVISIONS

| NO. | DATE | APPR. | REMARKS |
|---|---|---|---|
| 2 | 2/28/19 | JWC | REVISED LENGTH OF CG4 BAR |
| 1 | 10/25/18 | JWC | NEW DRAWING. COMPLETE REVISION TO CATTLE GUARD |

**UTAH DEPARTMENT OF TRANSPORTATION**
STANDARD DRAWINGS FOR ROAD AND BRIDGE CONSTRUCTION
SALT LAKE CITY, UTAH

RECOMMENDED FOR APPROVAL — FEB.28, 2019 DATE
CHAIRMAN STANDARDS COMMITTEE APPROVED — FEB.28, 2019 DATE
DEPUTY DIRECTOR

STANDARD DRAWING TITLE: 6'-0" PRECAST CONCRETE CATTLE GUARD END UNIT

STD. DWG. NO. SW 1D

DGN File:L:\Standard_Drawings\Imperial\2017 Approved_Supplemental_Issues\SuppApproved Feb - 2019\Backup1\SW01D.dgn
04-MAR-2019

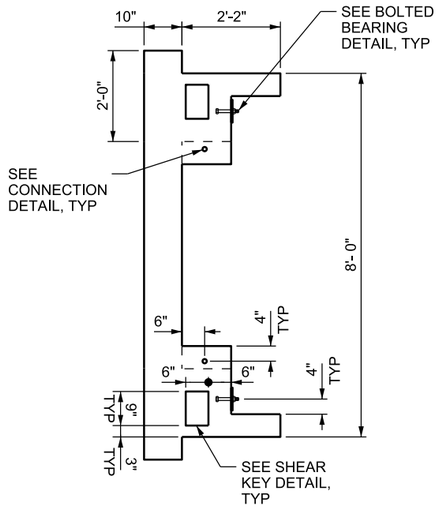


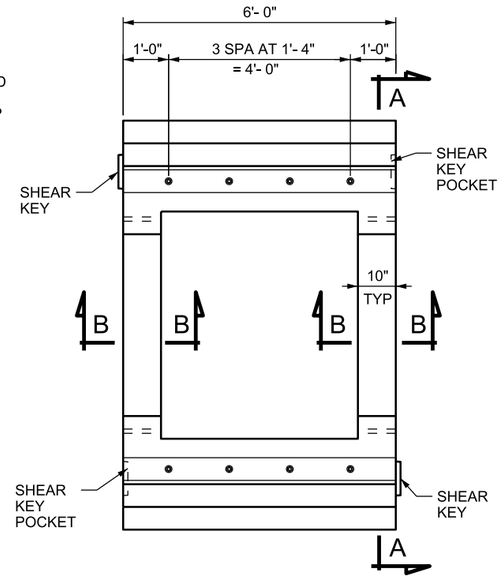


## 6'-0" CENTER UNIT

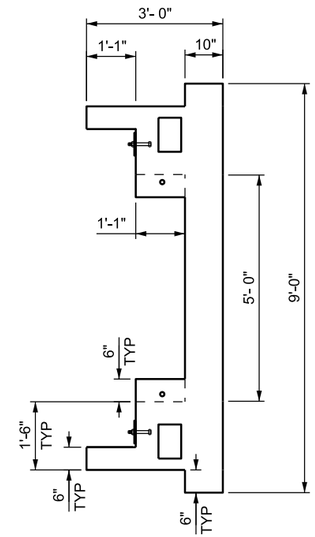


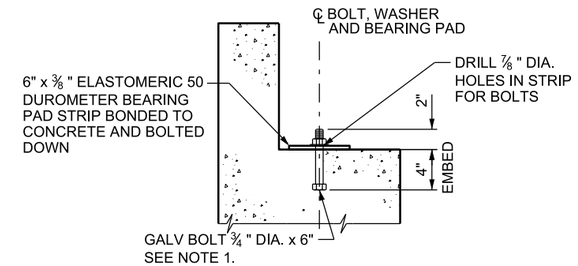


## BOLTED BEARING DETAIL

## SHEAR KEY DETAIL

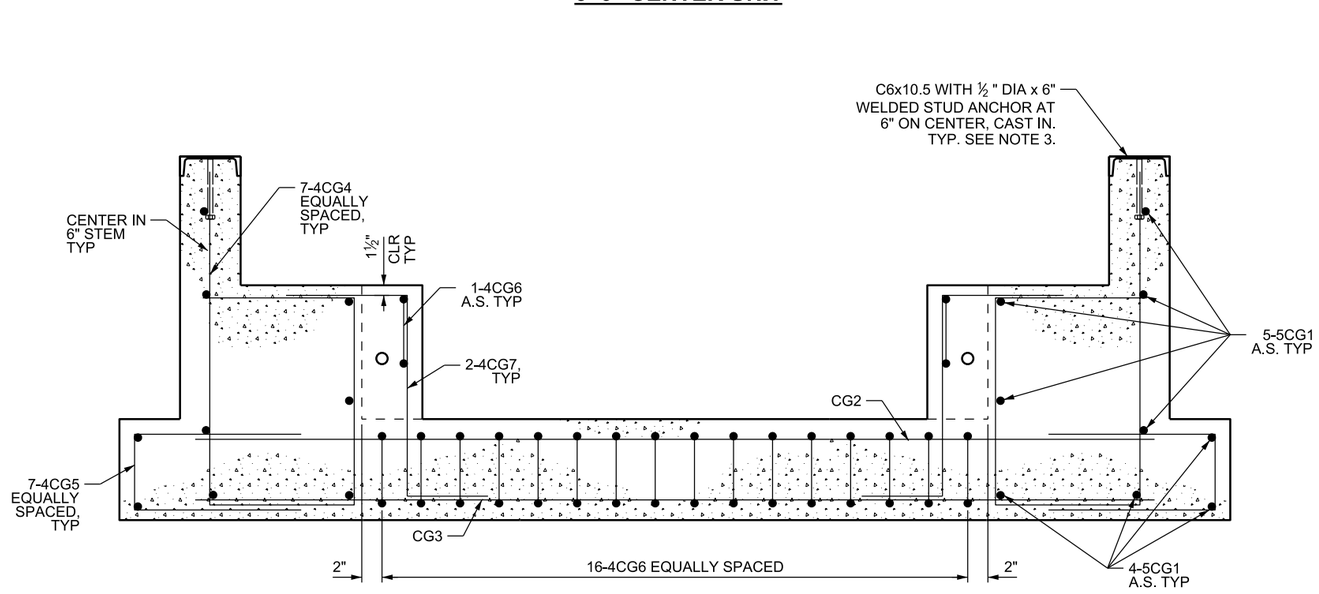


## SECTION A-A

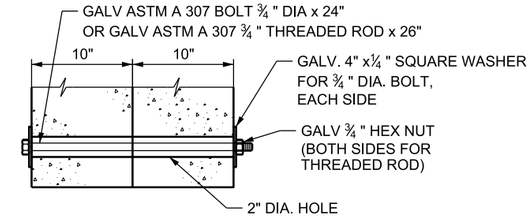


## CONNECTION DETAIL

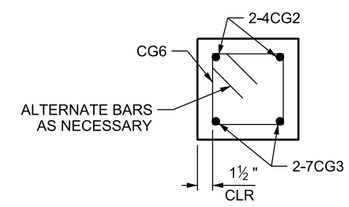


## SECTION B-B

**NOTES:**

1. FERRULE LOOP INSERTS SIZED FOR A BOLT OF EQUIVALENT DIAMETER TO THAT SHOWN MAY BE USED INSTEAD OF EMBEDDED BOLTS. FABRICATOR TO INCLUDE ASSOCIATED BOLT, OR EYE BOLT, OF LENGTH APPROPRIATE FOR FERRULE.
2. PROVIDE EMBEDDED LIFTING DEVICES CAPABLE OF SUPPORTING 20,000 LB MINIMUM TO LIFT THE PRECAST CATTLE GUARD UNIT INTO ITS FINAL POSITION.
3. WEEPHOLES ARE PERMITTED IN THE CHANNEL SECTION TO RELEASE ENTRAPPED AIR.

## REINFORCING STEEL SCHEDULE FOR CENTER UNIT

| MARK | LOCATION | SIZE | REQ'D | LENGTH | TOTAL | SKETCH |
|---|---|---|---|---|---|---|
| CG1 | CATTLE GUARD | 5 | 18 | 7'-8" | 138'-0" | |
| CG2 | CATTLE GUARD | 4 | 4 | 7'-8" | 30'-8" | |
| CG3 | CATTLE GUARD | 7 | 4 | 7'-8" | 30'-8" | |
| CG4 | CATTLE GUARD | 4 | 14 | 6'-8" | 93'-4" | 1'-1½", 2'-9", 1'-8", 1'-1½" |
| CG5 | CATTLE GUARD | 4 | 14 | 3'-5" | 47'-10" | 1'-5", 7" |
| CG6 | CATTLE GUARD | 4 | 32 | 3'-1" | 98'-8" | 135° STD. HOOK, 7", 7" |
| CG7 | CATTLE GUARD | 4 | 8 | 3'-6" | 28'-0" | 90° STD. HOOK, 1'-2", 1'-8" |

## STRUCTURAL STEEL PER UNIT

| ITEM | REQ'D | SIZE | LENGTH |
|---|---|---|---|
| CHANNEL | 2 | C6x10.5 | 6'- 0" |
| STUD ANCHOR | 24 | ½ " DIA | 0'- 6" |

SUPPLEMENTAL DRAWING

REVISIONS

| NO. | DATE | APPR. | REMARKS |
|---|---|---|---|
| 2 | 2/28/19 | JWC | REVISED LENGTH OF CG4 BAR |
| 1 | 10/25/18 | JWC | NEW DRAWING. COMPLETE REVISION TO CATTLE GUARD |

**UTAH DEPARTMENT OF TRANSPORTATION**
STANDARD DRAWINGS FOR ROAD AND BRIDGE CONSTRUCTION
SALT LAKE CITY, UTAH

RECOMMENDED FOR APPROVAL: FEB.28, 2019 DATE
CHAIRMAN STANDARDS COMMITTEE APPROVED: FEB.28, 2019 DATE
DEPUTY DIRECTOR

STANDARD DRAWING TITLE
6'-0" PRECAST CONCRETE CATTLE GUARD CENTER UNIT

STD. DWG. NO.
SW 1E

DGN File:L:\Standard_Drawings\Imperial\2017 Approved_Supplemental_Issues\SuppApproved Feb - 2019\Backup1\SW01E.dgn
04-MAR-2019

# Supplemental Issue, June 27, 2019

## Supplemental Specifications

| | |
|---|---|
| 00555M | Prosecution and Progress |
| 01355M | Environmental Compliance |
| 02701 | Pavement Smoothness |
| 02892M | Traffic Signal |
| 02983 | Grinding for Grooved-in Pavement Markings **(New Specification)** |
| 13591M | Traffic Monitoring Detector Loop |

## Supplemental Drawings

| | |
|---|---|
| AT 02 | Ramp Meter Signal Head Details |
| AT 09 | ATMS Cabinet and Equipment Disconnect and Transformer Frame |
| AT 14 | Solar Traffic Counting Station |
| BA 1B | Concrete Barrier Median Installation |
| BA 1C | Concrete Barrier Shoulder Installation |
| SL 4C | Underground Service Pedestals |
| SL 6A | Pedestrian Signal Assembly |

**Supplemental Specification**
**2017 Standard Specification Book**

**SECTION 00555M**

# PROSECUTION AND PROGRESS

**Delete Article 1.2 and replace with the following:**

## 1.2 RELATED SECTIONS

A. Section 00515: Contract Award and Execution

B. Section 00777: Change Management

C. Section 00820: Legal Relations and Responsibility to the Public

D. Section 01282: Payment

E. Section 01355: Environmental Compliance

**Delete Article 1.4 and replace with the following:**

## 1.4 DEFINITIONS

A. Percussive Noise – Short bursts of noise including but not limited to blasting, pile driving, and jack-hammering.

B. Temporary Noise Permits – A temporary exception to local jurisdictional authority noise ordinances.

C. Nighttime Construction Work – Highway construction occurring between the hours of 10:00 PM and 7:00 AM.

**Delete Article 1.5 and replace with the following:**

## 1.5 SUBMITTALS

A. Request to Sublet for review– Refer to this Section, Article 1.8.
   1. Include full copy of executed subcontract.
      a. Include all required federal and state provisions
      b. Include documentation demonstrating compliance with health care requirement specified in Section 00515.

B.. Partnering Certificates for information for all required personnel before execution of the first month's construction estimate

C. C-119A UDOT Team Rating Form before physical completion

**Delete Article 1.6 and replace with the following:**

## 1.6 PRECONSTRUCTION CONFERENCES

A. Contact Engineer within 14 calendar days after receiving Notice of Award and at least 7 calendar days before commencing work at the project site to schedule the preconstruction conference and the utility preconstruction conference
   1. Hold preconstruction conference and utility preconstruction conference separately.

**Delete Article 1.8 and replace with the following:**

## 1.8 CONTRACT SUBLETTING

A. Obtain authorization before subletting, selling, transferring, or assigning any portion of the contract.
   1. Provide a full copy of the subcontract
   2. An authorized request for subletting is required for the following before beginning work when subletting or contracting for material hauling by truck, including from an owner-operator:
      a. Hauling from any point or place within the project to any other point or place within the project.
      b. Hauling material that is not the property of the contractor from a point or place on the project to a point or place outside of the project.
      c. Hauling from a site of work location to a point or place on the project.
      d. Hauling from a point or place on the project to a site of work location.
      e. Hauling is performed by a commercial materials supplier or an independent third-party that places and incorporates the material into the project.
      f. Hauling is performed by a Disadvantaged Business Enterprise (DBE) firm.
   3. An authorized request for subletting is not required for the following when contracting for material hauling by truck, including from an owner-operator:

a. Hauling Contractor-owned materials from a point or place on the project to a point or place outside of the project.
b. Hauling is performed by a commercial materials supplier or a third-party and unloaded at a point or place on the project solely for the convenience of the supplier or transporter.
c. A DBE trucking company leases additional trucks.
1) Provide lease agreement to the Engineer before work.
2) Refer to Part VI Bid Conditions Disadvantaged Business Enterprise (DBE) Section F. Count DBE Participation Towards Goals for Performance.

B. Sublet no more than 70 percent of the total contract bid amount.
1. The Department considers an item as subcontracted in its entirety in computing the percentage of subcontracted work unless otherwise designated in the subcontract.
a. The Department uses the accumulated percentages of all approved subcontracts to determine that the maximum subcontracted limitation is not exceeded.
b. The Department uses the total dollar amount of the items subcontracted, divided by the total original contract amount to determine the amount of work subcontracted excluding:
1) Items such as bonds, insurance, profit, and home office overhead that are being carried by the prime contractor are not considered to be part of the subcontracted amount

C. Subcontracts do not relieve liability under the contract and bonds.
1. Accept liability for any claims for damages or liability resulting from an act or omission of any person who carries out work as part of the contract with the Department, whether the working relationship is through a formal subcontract or carried out by an informal, unwritten agreement. Indemnify the Department for any damages or liability, including attorney's fees and court costs that may be incurred by such a person.

D. Do not allow subcontracted work to begin until the request to sublet is authorized by the Engineer (if required).

E. Provide in subcontracts:
1. A reduction in retained money equal to the percentage retained according to Section 01282.
2. A statement describing the method of distribution of any adjustment due to price increases or decreases using applicable price adjustment specifications for items such as fuel, asphalt, cement, and common carrier rates.

F. Supply all necessary resources to complete the contract regardless of the amount of work sublet.

**Delete Paragraph 1.9 D and replace with the following:**

D. Nighttime Construction Work
   1. Notify the Engineer at least five calendar days before starting nighttime construction work.
   2. Provide adequate lighting for safely performing satisfactory inspection and construction operations.
   3. Minimize noise during Nighttime Construction Work.
      a. Comply with temporary noise permit conditions
         1) Notify the Engineer and local government authority two weeks in advance of percussive noise activity.
         2) Nonconformance with temporary noise permit conditions will result in disincentive according to Section 01355.
      b. Department obtained Temporary Noise Permits are included in the contract
      c. Obtain required temporary noise permits for:
         1) Nighttime construction work within the project construction limits when nighttime construction work is not required in the contract.
         2) Activities outside of the project limits such as off-site batch plants and gravel pits.

**Delete Article 1.11 and replace with the following:**

## 1.11 PARTNERING

A. Implement partnering according to the Partnering Field Guide. Refer to http://www.udot.utah.gov/go/standardsreferences.
   1. Failure to comply will result in 25 percent of the first estimate's Mobilization payment up to $25,000 being withheld until all individuals have completed the required training.

B. Utilize the partnering "Facilitation Type Scoresheet" in the Department's Information Technology systems in cooperation with the Engineer to select the type of Partnering appropriate for the project.
   1. Use an approved third party facilitator from UDOT's Approved Facilitator List if formal facilitation is selected. Refer to http://www.udot.utah.gov/go/standardsreferences.
   2. The Department will reimburse 100 percent of formal partnering invoices that were pre-approved by the Engineer.

a. The Department will not reimburse invoices that were not pre-approved.

**Delete Paragraph 1.12 C and replace with the following:**

C. The Engineer furnishes a Monthly Status of Contract Time Report, showing the number of days expended to date and the number of days remaining for substantial completion.
   1. This statement is considered correct unless a documented protest explaining the Contractor's discrepancies with the Monthly Status of Contract Time report is submitted to the Engineer within seven calendar days of receipt.
   2. Failure to file a protest within the allotted time is acceptance of the time assessments provided by the Engineer in the Monthly Status of Contract Time Report.

**Delete Article 1.13 and replace with the following:**

## 1.13 WORK SUSPENSIONS

A. The Engineer may give written notice to suspend all or any portion of work for any reason at any time during the contract for the mutual benefit of the Department and the Contractor. Contract time will not accrue during a work suspension. Do not resume work until notification is received from Engineer.
   1. Submit a request to the Engineer for a contract adjustment for suspensions or delays considered anomalous.
      a. Submit the request within seven calendar days of the notice to resume work.
      b. Contract adjustment is made only for requests submitted within the established time frame.
   2. The Department does not allow adjustments to the contract to the extent that performance would have been suspended or delayed by any other cause or for which an adjustment is provided for or excluded under any other contract term or condition.
   3. Time charges will not accrue during work suspensions.
   4. Contract adjustment is made as specified in Section 00777 if both parties agree that the suspension:
      a. Increased the cost or time required for the performance of the contract.
      b. Resulted from conditions beyond control of the Department or the Contractor.
      c. Was not caused by normal weather.

d. Was not due to failure to correct conditions unsafe for the workers or the general public

B. Contractor may pursue a claim for additional compensation or contract adjustment if there is disagreement with this Article.

C. Maintain Traffic during a suspension
1. Prepare the project for traffic flow during anticipated work suspensions.
2. Maintain all required traffic control devices.
3. The Department performs snow removal activities on temporary roadways and portions of the project during work suspensions.
4. Repair or replace all work or materials lost or damaged during the suspension.
5. Remove work or materials used for temporary maintenance and complete the project as though the work had been continuous and without interference.
6. The Department pays for maintenance required by events beyond control during work suspensions at contract prices or as extra work.

**Delete Article 1.14 and replace with the following:**

## 1.14 STOP WORK ORDERS

A. Stop Work Order:
1. The Engineer has the authority to stop work on a project, wholly or in part, when it is determined that the Contractor does not:
   a. Correct conditions unsafe for the project personnel or the public.
   b. Perform work properly or comply with contract provisions.
   c. Comply with the Engineer's orders.
2. Contract time will continue to accrue during a stop work order. Do not resume work until notification is received from Engineer.
3. The Engineer will provide a written Stop Work Order, within 24 hours of verbal notification, that describes the reason for ordering work to stop and what actions need to be taken or how conditions need to change before work may resume.
4. The Engineer will notify the Contractor when to resume work.
5. Time charges will continue to accrue during periods of stopped work.

B. Work may be stopped for any of the following reasons:
1. Contractor's failure to comply with the contract.
2. Contractor's failure to keep insurance coverage according to Section 00820

3. Contractor's failure to provide workers or equipment
4. Work is being performed when unsuitable weather or soil conditions exist that are detrimental to the quality of the finished product
5. Conditions exist that threaten the safety of the workers, public or nearby property.

**Supplemental Specification**
**2017 Standard Specification Book**

**SECTION 01355M**

# ENVIRONMENTAL COMPLIANCE

**Delete Article 1.3 and replace with the following:**

## 1.3 REFERENCES

A. American National Standards Institute (ANSI)

B. Clean Water Act

C. Code of Federal Regulations (CFR)

D. Rivers and Harbors Act

E. U.S. Environmental Protection Agency (EPA) Regulations

F. Utah Administrative Code (UAC)

G. Utah Department of Environmental Quality (DEQ) Regulations

H. Utah Pollutant Discharge Elimination System, Utah Construction General Permit (CGP) and UDOT Municipal Separate Storm Sewer System (MS4) Permit

I. Utah State Stream Alteration Program

**Delete Article 1.4 and replace with the following:**

## 1.4 DEFINITIONS

A. Fugitive Dust – Small particles originating primarily from soil that are suspended in the air by the wind and by human activities

**Delete Article 1.5 and replace with the following:**

## 1.5 SUBMITTALS

A. Stormwater Pollution Prevention Plan (SWPPP) for approval before construction on projects with one or more acres of soil disturbance.

B. Municipal Separate Storm Sewer System (MS4) Compliance Plan for approval on projects with less than one acre of soil disturbance.

C. Signed copy of the Notice of Intent (NOI) for information.

D. Signed copy of the Notice of Termination (NOT) for information.

E. UDOT Environmental Control Supervisor (ECS) Certificate of Training for information.

F. Fugitive Dust Control Plan for information.

G. Documentation of environmental clearances for areas not previously cleared for review.

H. SWPPP with final documentation such as modifications and completed inspection forms before project close-out for information.

**Delete Article 3.1 and replace with the following:**

## 3.1 HAZARDOUS WASTE

A. Suspend work immediately in an area if abnormal conditions are encountered or exposed during construction that indicates the presence of a hazardous waste.
   1. Notify the Engineer.

B. Do the following if a waste discovered or spilled on-site is considered hazardous according to the reportable quantity (RQ) limits identified in Title 40 CFR 302.4.
   1. Take appropriate actions to minimize the threat to human health and the environment.
   2. Contact the Engineer and send notice if waste found on-site is considered hazardous.
   3. Follow appropriate testing measures to determine if waste is hazardous.

4. Notify DEQ, 24-hour Answering Service at (801) 536-4123, and the National Response Center at (800) 424-8802.
5. Follow requirements in UAC R315.

C. Coordinate with the Engineer to initiate development of a remediation plan according to DEQ and the EPA regulations and requirements.
1. Pay for costs to address hazardous waste discovery or spill cleanup when caused by Contractor's activities.
2. Cost to test and remedy waste not caused by Contractor to be considered as contract change order by Engineer.

D. Complete the work required by the remediation plan before resuming operations in the affected area.

**Delete Article 3.2 and replace with the following:**

## 3.2 SPILL OF PETROLEUM-BASED PRODUCT AND USED OIL

A. Contact the Engineer if a spill occurs that exceeds 25 gallons, or that poses a potential threat to human health or the environment, such as discharging to groundwater, surface water, or a storm drain.
1. Send notice following the discovery of the spill.
2. Notify DEQ, 24-hour Answering Service, at (801) 536-4123.
3. Coordinate with the Engineer to develop a remediation plan for spilled used oil or petroleum-based product according to UAC R315-15-8 and R315-15-9.

B. Cleanup petroleum-based or used oil product when caused by Contractor's activities.

**Delete Article 3.3 and replace with the following:**

## 3.3 WATER RESOURCE PERMITS

A. Comply with the Utah State Stream Alteration Program.

B. Comply with Section 10 of the Rivers and Harbors Act.

C. Comply with Section 404 of the Clean Water Act.

D. Comply with the National Flood Insurance Program for a project within a Special Flood Hazard Area (SFHA), as defined by the Federal Emergency Management Agency (FEMA).

**Delete Article 3.4 and replace with the following:**

## 3.4 OPEN BURNING

A. Do not conduct open burning within the site of work without approval from the Utah Department of Air Quality (DAQ).

**Delete Articles 3.6, 3.7, 3.8 and 3.9 and replace with the following:**

## 3.6 ENVIRONMENTAL CLEARANCE BY THE CONTRACTOR

A. Obtain authorization before starting any ground disturbing activity not previously cleared by the Department such as wasting project-generated material, excavating borrow material, locating equipment, storage areas, office sites, utility lines, or holding ponds.
   1. Cultural and Paleontological – Perform and provide a cultural survey as determined by the Engineer to verify no cultural or paleontological resources are affected by the activity.
   2. Threatened or Endangered Species – Perform and provide a wildlife survey as determined by the Engineer to verify no threatened or endangered or other sensitive species are affected by the activity.
   3. Federal and State regulated waters – Provide documentation as determined by the Engineer to verify that no Waters of the United States and State of Utah waters are impacted by the activity.
   4. FEMA Floodplains – Provide documentation as determined by the Engineer to verify no FEMA Special Flood Hazard Areas (SFHA) are impacted by the activity.
   5. CGP – Provide a separate SWPPP for CGP compliance as determined by the Engineer when disturbing more than one acre of soil off the project site.

B. The Contractor is responsible for costs of pursuing and obtaining clearances for areas not previously cleared and is not entitled to time extension for delays encountered in obtaining these clearances.

C. Environmental clearances are required regardless of the property ownership.

## 3.7 DISCOVERY OF HISTORICAL, ARCHAEOLOGICAL, OR PALEONTOLOGICAL OBJECTS, FEATURES, SITES, OR HUMAN REMAINS

A. Suspend work within the vicinity if historical, archaeological or paleontological objects, features, sites or human remains are discovered during construction:
   1. Provide a 100 ft minimum buffer around the perimeter of the discovery.
   2. Protect the discovery area.
   3. Contact the Engineer and send notice of the nature and exact location of the discovery.
   4. Provide written documentation to the Engineer within two calendar days of discovery.

B. Do not recommence work within the area of discovery until the Engineer provides written notice.

## 3.8 STORMWATER MANAGEMENT COMPLIANCE

A. Comply with CGP requirements for projects with one or more acres of soil disturbances (clearing, grading or excavating).
   1. Designate an individual, other than the Superintendent, as the Environmental Control Supervisor (ECS) with the following responsibilities:
      a. Maintain current certifications for UDOT Environmental Control Supervisor training.
      b. Coordinate with the Engineer regarding CGP requirements and environmental commitments.
      c. Manage implementation, modification and record keeping of the project SWPPP.
      d. Supervise the installation, maintenance and removal of Best Management Practices (BMPs).
      e. Conduct SWPPP inspections.
      f. Be available 24 hours a day, seven days a week, and be on-site within a reasonable amount of time from notification as determined by the Engineer.
   2. Complete the SWPPP for the project using the draft provided by the Engineer.
   3. Complete the Notice of Intent (NOI) to the Utah Division of Water Quality (DWQ), after the SWPPP has been signed by the Engineer.
   4. Conduct SWPPP inspections at least once a week and within 24 hours following a storm event with a total rainfall amount of ½ inch or greater once earth-disturbing activities have begun.
      a. Use the Department SWPPP Inspection Forms.

5. Coordinate with the Engineer to determine if the project has met CGP requirements before submitting the Notice of Termination (NOT) to DWQ.

B. Comply with the UDOT MS4 Permit for projects with less than one acre of soil disturbances (clearing, grading or excavating).
   1. Coordinate with the Engineer regarding MS4 permit requirements and environmental commitments.
   2. Obtain approved MS4 Compliance Plan before start of construction activities.
   3. Install, maintain, and remove Best Management Practices (BMPs) as required in the site of work.

C. Implement the following Pollution Prevention and Good Housekeeping Practices:
   1. Concrete Washout
      a. Provide a watertight container on-site before concrete placement activities begin and where concrete trucks, tools and equipment are to be washed.
         1). Size the container to prevent overflows.
         2). Do not place within 50 feet of storm drain inlets, open ditches or watercourses.
      b. Remove and properly dispose of concrete waste and washout water.
   2. All debris, such as mud, dirt, gravel and other material collected from street sweeping or storm drain inlets and pipe cleaning to be stored and contained within impervious area until they are properly disposed of.
   3. Prevent material from entering into stormwater conveyances, such as storm drain inlets and drainage pipes, ditches, natural waterways, and wetlands.
   4. Maintain site of work in a clean condition through proper disposal and clean-up of sanitary waste, trash, spills, chemicals, and other waste materials.
   5. Use drip pans and absorbent materials to mitigate discharges from leaking equipment until repairs can be made. Maintain a spill kit within the site of work.

**Supplemental Specification**
**2017 Standard Specification Book**

**SECTION 02701**

# PAVEMENT SMOOTHNESS

**Delete Section 02701 in its entirety and replace with the following:**

## PART 1 GENERAL

### 1.1 SECTION INCLUDES

A. Testing and determination of a minimum International Roughness Index (IRI) for pavement smoothness for the following pavements:
   1. Hot Mix Asphalt (HMA)
   2. Open Graded Surface Course (OGSC)
   3. Bonded Wearing Course (BWC)
   4. Stone Matrix Asphalt (SMA)
   5. Micro-surfacing
   6. Portland Cement Concrete Pavement (PCCP)
   7. PCCP rehabilitation.

### 1.2 RELATED SECTIONS

A. Section 02742S: Project Specific Surfacing Requirements

B. Section 02745: Asphalt Material

C. Section 02981: Grinding Pavement

### 1.3 REFERENCES

A. AASHTO M 328: Inertial Profiler

B. AASHTO R 43: Quantifying Roughness of Pavements

C. AASHTO R 54: Accepting Pavement Ride Quality When Measured Using Inertial Profiling Systems

D. AASHTO R 57: Operating Inertial Profiling Systems

E. ASTM E 2560: Data Format for Pavement Profile

F. UDOT Materials Manual of Instruction

## 1.4 DEFINITIONS

A. Pavement Section
   1. Each travel lane or median, 528 ft long. Sections include:
      a. All traffic lanes
      b. Ramps
      c. Medians and two way left turn lanes 8 ft and wider
      d. Turn lanes
   2. Each pavement section is laid out consecutively from the start of the project.

B. Structure Section
   1. Each travel lane or median, 528 ft long. Sections include:
      a. Bridges, approach slabs, and pavement within 25 ft of the approach slab with final riding surfaces placed as part of the contract.

C. Wheel Path
   1. A continuous parallel line 2.5 ft inside the lane or median lines.

D. Mean Roughness Index (MRI)
   1. Average of two wheel path IRIs taken from each pavement section.

E. Localized Roughness
   1. Profile deviations in a continuous 25 ft pavement as identified using the ProVAL “Smoothness Assurance” analysis, calculating IRI with a continuous short interval of 25 ft [7.62 m] and the 250- mm filter applied.

## 1.5 SUBMITTALS

A. Certifications for profilers and operators, for information.

B. Summary report of acceptance profile testing. Include at least the following:
   1. Pavement Section identification
   2. Structure Section identification
   3. MRI results by section
   4. Localized Roughness results.
   5. Include any electronic project files.
      a. Flag utility locations in the acceptance profile.
      b. Identify milepost or project stationing for the beginning of the profile collection.
      c. Flag beginning and end of grinding locations in acceptance profile.

C. Original raw data files compatible with the ASTM E 2560 standard. Refer to AASHTO R 43.
   1. Data files collected prior to beginning work for Category 2 Pavement Sections.
   2. Data files collected before corrective work.
   3. Data files collected prior to placing final riding surface.
   4. Data files collected for acceptance.

## 1.6 ACCEPTANCE

A. Limit transverse pavement deviations to less than $^{3}/_{16}$ inch from the lower edge of a 10-ft straightedge.

B. Limit Localized Roughness greater than 15 ft in length as specified in Section 02742S.
   1. Measure localized roughness for the following locations:
      a. All traffic lanes
      b. Ramps
      c. Medians and two way left turn lanes 8 ft and wider
      d. Turn lanes
      e. Shoulders wider than 4 ft
      f. Bike lanes
      g. Structures and approach slabs with the final riding surfaces placed as part of the contract
   2. Localized Roughness requirements apply to all pavements and structures regardless of length.
   3. Localized Roughness requirements do not apply to micro-surfacing.
   4. Include profile deviations from bridge decks, approach slabs and transitions, manholes, valves, and other facilities in the profile when the contract requires the adjustment, new construction or reconstruction of these facilities.
   5. Exclude profile deviations from bridge decks, approach slabs and transitions, manholes, valves, and other facilities in the profile when the contract does not include adjustment, new construction or reconstruction of these facilities.
      a. Category 2 Pavement Sections: the Engineer may waive areas of Localized Roughness due to existing conditions.
         1) Provide an explanation for each location where existing conditions prevent the requirements from being met.
         2) Do not remove these areas from the profile for incentive/disincentive calculations.

C. The Department applies Incentive/Disincentive for smoothness based on the profile of the final surface. MRI is evaluated for each Pavement Section and Structure Section with 250-mm filter applied using the most recent version of Profile Viewer and Analysis (ProVAL) software. Refer to AASHTO R 54 and ASTM E 2560.

1. Refer to Section 02742S for definitions of Category 1 Pavement Sections and Category 2 Pavement Sections.
2. Include all Structure Sections regardless of length and pavements greater than 528 ft.
3. The Department will apply incentives/disincentives before placement of a chip seal or micro-surfacing.
4. Pavement sections requiring corrective action for localized roughness at the time of acceptance testing are not eligible for incentives.
5. The Department applies Incentive/Disincentive for Category 1 Pavement Sections and Structure Sections based on the tables in Section 02742S
6. The Department calculates the percent improvement for Category 2 Pavement Sections using the following formula:

$$\frac{[MRI_o - MRI_f] \times 100}{MRI_o}$$

Where:

$MRI_o$ = MRI of original roadway surface
$MRI_f$ = MRI of final corrected roadway surface

a. The Department applies Incentive/Disincentive based on the tables in Section 02742S and the following:
   1) Sections with a $MRI_f \leq 90$ do not require corrective action.
   2) Disincentive does not apply to sections with an $MRI_f \leq$ to 70.

7. The Department calculates the percent improvement for micro-surfacing Pavement Sections according to the formula in Article 1.6.C.6 and applies Incentive/Disincentive based on the table in Section 02742S.
8. The Department will prorate incentives/disincentives for partial pavement sections.
9. The Department will apply an additional $1000 disincentive per pavement section to:
   a. Pavement Sections with HMA and SMA final surfaces where grinding exceeds 30 $yd^2$.
   b. Pavement Sections with grinding on the final surface of OGSC, and BWC.

c. The additional disincentive does not apply to the first or last 25 ft of the project.

10. The Department does not apply Incentives/Disincentives to:
    a. Pavements shorter than 528 ft
    b. Shoulders
    c. Bike Lanes
    d. Medians narrower than 8 ft
    e. Horizontal curves with a centerline curvature radius less than 900 ft and areas within the superelevation transitions to these short radius curves
    f. Horizontal tapers
    g. Surfaces within 15 ft of bridge decks and approach slabs not constructed as part of the contract
11. The Engineer may accept a pavement section requiring corrective action for MRI at a $1000 disincentive per pavement section.

.

## 1.7 OPERATOR QUALIFICATIONS

A. Use a certified operator according to UDOT Materials Manual of Instruction 995.

# PART 2 PRODUCTS

## 2.1 FLUSH COAT

A. CQS-1h or CSS-1h emulsified asphalt. Refer to AASHTO M 208 and Section 02745.
    1. Select emulsion according to the time constraints required for Maintenance of Traffic (MOT) and the ability to fully cure before allowing traffic on the roadway.

## 2.2 PROFILING EQUIPMENT

A. Certify equipment according to UDOT Materials Manual of Instruction 995.
    1. Use only the prescribed filter settings from the certification for all measurements in this Section.

# PART 3 EXECUTION

## 3.1 GENERAL REQUIREMENTS

A. Notify the Engineer at least two working days before performing acceptance testing for pavement smoothness.

1. Clearly define each of the pavement sections to be evaluated.

B. Perform work necessary to prepare the pavement for testing, including
   1. Sweep and clean debris.
      a. Do not profile if water is on roadway.
   2. Remove or relocate barricades and utility plates so profiler can maintain constant speed and alignment.
   3. Mark begin and end locations as well as any excluded areas.

C. The Department may perform Independent Assurance testing according to AASHTO R 54 Verification Testing
   1. Coordinate this testing with the Engineer.

## 3.2 MICROSURFACING

A. Profile before and after placement of micro-surfacing.

## 3.3 MRI OF ORIGINAL ROADWAY SURFACE

A. Profile existing roadway surface before beginning construction to determine $MRI_o$ for Category 2 pavement Sections.
   a. Collect profiles with GPS location enabled.

## 3.4 PAVEMENT PROFILE CORRECTION

A. Perform preliminary profiling and roadway smoothness evaluation to identify any defects exceeding acceptance limits.

B. Correct defects before performing acceptance testing.
   1. Category 1 Pavements: Measure and correct Localized Roughness defects in the underlying surface before placement of a final surface of OGSC, BWC, SMA, chip seal, or micro-surfacing.
   2. Correct defects across lanes, medians, and shoulders in widths terminating at a lane line, edge of pavement, or center of the lane either by grinding or by surface replacement as approved by the Engineer. Refer to Section 02981 for grinding requirements
      a. Include areas not eligible for incentive/disincentive.
   3. Taper corrected areas for smooth transverse transitions and surface drainage.

## 3.5 ACCEPTANCE PROFILING

A. Perform acceptance testing for smoothness after all corrective work has been performed.

1. Collect longitudinal profiles in each wheel path and in the center of each paved shoulder and bike lane using Department certified profilers and operators in accordance with AASHTO R 54, R 57 and M 328.
   a. Collect profiles with GPS location enabled
2. Category 1 Pavements: Acceptance testing can be performed before raising manholes and valves.
3. Category 1 Pavements: Acceptance testing can be performed before grooving in pavement messages.
4. Profile Structure Section prior to placement of thin-bonded overlays.

B. Seal corrected areas in BWC, OGSC, HMA, and SMA with a flush coat application.
   1. Apply the flush coat at an undiluted rate of 0.11 ± 0.01 gal/yd$^2$
   2. Allow flush coat to cure for 24 hour prior to any profiling.

## 3.6 PAVEMENT THICKNESS

A. Re-test pavements for thickness after grinding as determined by the Engineer.

END OF SECTION

**Supplemental Specification**
**2017 Standard Specification Book**

**SECTION 02892M**

# TRAFFIC SIGNAL

**Delete Article 2.3, Paragraph A and replace with the following:**

A. Power Service/Lighting Conductors
   1. Refer to Section 16530
   2. Stranded copper conductors only
   3. Conductors sized per NEC (minimum 10 AWG RHH RHW-2, XLP USE-2 or approved equivalent)
      a. Power Service Conductors
         1) Continuous red insulation color for AC+
         2) Continuous white insulation color for neutral
      b. Lighting conductors (240 Volt unless specified otherwise)
         1) Continuous blue insulation color for AC+
         2) Continuous white insulation color for neutral

**Delete Article 2.3, Paragraph C and replace with the following:**

C. Bonding/Grounding Cable
   1. Size bonding wire according to NEC article 250 (minimum 6 AWG, copper, solid, bare, soft-drawn)

**Add the following to Article 2.3, Paragraph D Radar Detection Cable:**

   2. 2-Conductor 14 AWG shielded Loop Home Run Cable conforming to IMSA 50-2 specifications

**Delete Article 2.6, Subparagraph B4 and replace with the following:**

   4. Enclose supporting circuitry within the button with wiring to the push button terminated on two ¼ inch - 20 brass screw terminals

**Delete Article 2.13 Subparagraph B3**

**Delete Article 3.16, Paragraph B and replace with the following:**

B. Bonding Conductor (Ground)
   1. Run continuously and bond to each metal signal pole or luminaire pole.
   2. Attach one wire around the signal pole base bolt with a washer. Each additional wire will be attached with a split-bolt.
   3. Bond the grounding system conductor to the ground rod in each junction box where 50 V or greater is present.
      a. Ground rod clamps (acorns) are required for connecting the bond/ground wire to the ground rod.
      b. Only (1) wire per clamp is allowed. Only (1) clamp per ground rod is allowed.
      c. Combine additional wires using split-bolts.
      d. Wire terminal busses of any type are not allowed in signal related junction boxes or poles.

**Add the following to Article 3.22 Install Radar Detection:**

B. Install auxiliary ground wire from all stop bar radar units to the signal cabinet (not needed for dilemma zone or extended radar detection).
   1. Provide 12 AWG, stranded, green insulated, UV rated wire.
   2. Attach wire to the radar unit exterior grounding lug with forked spade and to the grounding bus in signal cabinet.
   3. Auxiliary ground wire may be spliced at the radar unit home-run splice point within the splice kit. Ground wires may be combined at splice points to maintain one ground wire per roadway crossing.

C. Install an auxiliary power cable to limit voltage drop, for radar unit installations over 500 feet from the signal cabinet (as measured by cable length).
   1. Provide a 2-conductor 14 AWG, IMSA 50-2 cable.
   2. Do not use power wires (RED and BLACK) from the manufacturer recommended multi-wire cable.
   3. Land the auxiliary power cable at the cabinet and splice point as follows:
      a. Black to Black radar unit port/wire.
      b. Clear to Red radar unit port/wire.

**Supplemental Specification**
**2017 Standard Specification Book**

**SECTION 02983**

# GRINDING FOR GROOVED-IN PAVEMENT MARKINGS

## PART 1 GENERAL

### 1.1 SECTION INCLUDES

A. Pavement grinding for the installation of grooved-in pavement markings.

### 1.2 RELATED SECTIONS Not Used

### 1.3 REFERENCES Not Used

### 1.4 DEFINITIONS

A. Background Option 1 – Contrast striping created by applying black pavement markings and colored markings simultaneously.

B. Background Option 2 – Contrast striping created by applying colored markings over black pavement markings.

C. Contrast Striping – Created by applying colored pavement markings over or in conjunction with black pavement markings.

D. Non-Contrast Striping – Striping that is applied over bare pavement without the use of black pavement markings.

### 1.5 SUBMITTALS Not Used

## PART 2 PRODUCTS

### 2.1 EQUIPMENT

A. Provide a grooving machine, grinder, or saw that:
   1. Is capable of grinding or cutting to the required depth and cross section.
   2. Is capable of providing a smooth surface to meet pavement marking manufacturer's recommendations.

3. Has sufficient power, traction, and stability to maintain an accurate depth of cut.

B. Walk-behind machines are not allowed for longitudinal lines.

C. Use appropriate cleaning equipment capable of sweeping and picking up millings during and after grinding operations.

## PART 3 EXECUTION

### 3.1 PREPARATION

A. Horizontal Line Control for Grinding
   1. Establish control points at 100 ft intervals on tangent and at 50 ft intervals on curves.
   2. Maintain the line within 2 inches of the established control line and mark the roadway between control points as needed.

### 3.2 GRINDING

A. Grind pavement along lane lines and in pavement message areas to specified depth, width, and length.

B. Groove Depth
   1. Tape
      a. Contrast Striping Grooves (Background Option 1): Minimum depth of 75 mils and a maximum depth of 100 mils.
      b. Contrast Striping Grooves (Background Option 2): Minimum depth of 150 mils and a maximum depth of 200 mils.
      c. Non-Contrast Striping Grooves: Minimum depth of 75 mils and a maximum depth of 100 mils.
   2. Paint
      a. Contrast Striping Grooves: Minimum depth of 80 mils and a maximum depth of 160 mils.
      b. Non-Contrast Striping Grooves: Minimum depth 40 mils and a maximum depth of 80 mils.
   3. Use manufacturer's recommended depth for non-painted messages; minimum 10 mils from surface of pavement marking to non-grooved adjacent pavement.

C. Groove Width
   1. Grind at most 1 inch wider than the width of the pavement marking line.
   2. Grind pavement messages at least 1 inch beyond outer message dimensions.

D. Groove Length
   1. Grind at most 2 inches longer than the length of the pavement marking line.
   2. Grind as continuous groove for solid lines.
   3. Grind pavement messages at least 1 inch beyond outer message dimensions.

## 3.3 CLEANING

A. Remove and clean millings from the surface as work progresses.
   1. Milled material is the property of the Contractor.

B. Thoroughly clean grooved areas upon completion.

END OF SECTION

**Supplemental Specification**
**2017 Standard Specification Book**

**SECTION 13591M**

# TRAFFIC MONITORING DETECTOR LOOP

**Delete Article 2.2, subparagraph C1, and replace with the following:**

1. Abrasion-resistant alloy cover with braided synthetic fiber reinforcement.

**Delete Article 3.3, Paragraph C, and Table 1 and replace with the following:**

C. Install detector wiring and color code cables according to Table 1 and AT Series Standard Drawings. Identify each home run cable in every junction box.
   1. Use electrical tape and color-code the home run cables using the following color and number scheme:
      a. 1 = Brown
      b. 2 = Red
      c. 3 = Orange
      d. 4 = Yellow
   2. Place the colored bands at the end of a home run cable. Use Table 1 to select the proper color band.
      a. Place the first colored tape band to indicate the lane. Lane 1 is nearest to the traveled lanes.
      b. Place the second colored tape band to indicate the zone where loops are located. (Passage, Demand, Mid Queue and Advance Queue.)
      c. Place the third colored tape band to indicate the first or second demand loop in the pair.
      d. The demand loop closest to the stop bar is Brown, the next demand loop in the pair is Red.

Table 1

| Color Coding to Identify Home Run Cables | | | | |
|---|---|---|---|---|
| **Zones and Loops** | **Lane 1 = Brown** | **Lane 2 = Red** | **Lane 3 = Orange** | **Lane 4 = Yellow** |
| | | | | |
| **Passage Loop** | Loop 1 (Br-Br) | Loop 5 (Red-Br) | Loop 9 (Or-Br) | Loop 13 (Ye-Br) |
| **Demand Loop Front** | Loop 2 (Br-Red-Br) | Loop 6 (Red-Red-Br) | Loop 10 (Or-Red-Br) | Loop 14 (Ye-Red-Br) |
| **Demand Loop Rear** | Loop 2 (Br-Red-Red) | Loop 6 (Red-Red-Red) | Loop 10 (Or-Red-Red) | Loop 14 (Ye-Red-Red) |
| **Mid Queue Loop** | Loop 3 (Br-Or) | Loop 7 (Red-Or) | Loop 11 (Or-Or) | Loop 15 (Ye-Or) |
| **Advance Queue Loop** | Loop 4( Br-Ye) | Loop 8 (Red-Ye) | Loop 12 (Or-Ye) | Loop 16 (Ye-Ye) |

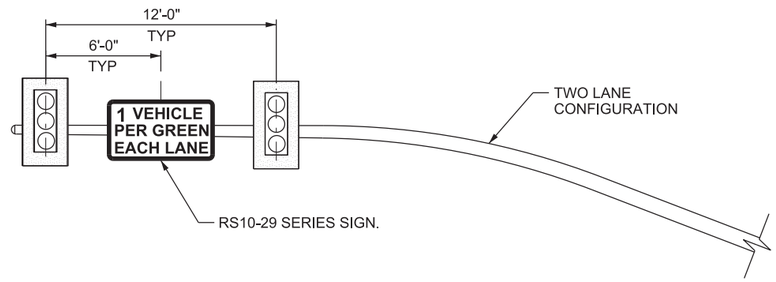


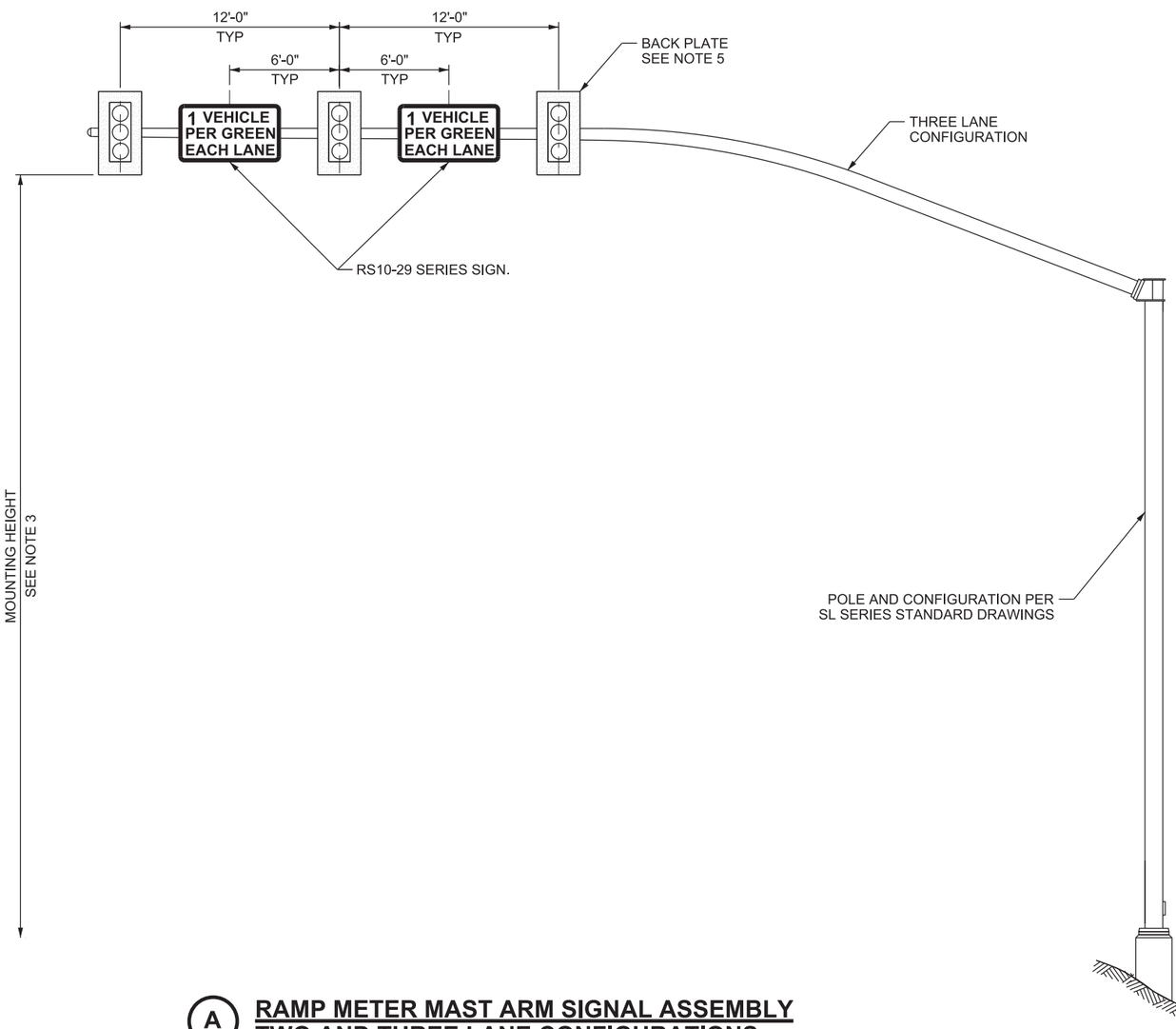


## (A) RAMP METER MAST ARM SIGNAL ASSEMBLY TWO AND THREE LANE CONFIGURATIONS

**NOTES:**

1. SIGNAL POLE, MAST ARM AND LUMINAIRE EXTENSION ARE STATE FURNISHED ITEMS.
2. ALIGN ALL SIGNAL HEADS WITH CENTER OF LANES.
3. SEE STD DWGS SL 1A AND SL 3B FOR MAST ARM SIGNAL HEAD MOUNTING.
4. USE SEPARATE SEVEN CONDUCTOR CABLE FOR EACH SIGNAL HEAD. SEE STD DWG SL 3E.
5. USE TYPE I SIGNAL HEAD (12 INCH) WITH BACK PLATE ON RAMP METER MAST ARM. SEE STD DWG SL 6. ALL BACK PLATES TO BE SOLID BLACK, RETROREFLECTIVE TAPE WILL NOT BE ALLOWED.
6. VERIFY THE RS 10 - 29 SERIES SIGN WITH TRAFFIC MANAGEMENT DIVISION.

SUPPLEMENTAL DRAWING

| NO. | DATE | APPR. | REMARKS |
|---|---|---|---|
| 2 | 6/27/19 | JBY | FIXED DRAWING CROSS REFERENCE ERROR IN NOTE 4; REMOVED NOTE 7 |
| 1 | 2/28/19 | CGW | REMOVED 4TH AND 5TH NOTES, DIM. TO EDGE OF TRAVEL WAY; REVISED NOTE 7 |

**UTAH DEPARTMENT OF TRANSPORTATION**
STANDARD DRAWINGS FOR ROAD AND BRIDGE CONSTRUCTION
SALT LAKE CITY, UTAH

RECOMMENDED FOR APPROVAL — JUNE 27, 2019 DATE
CHAIRMAN STANDARDS COMMITTEE APPROVED — JUNE 27, 2019 DATE
DEPUTY DIRECTOR

RAMP METER
SIGNAL HEAD DETAILS
STANDARD DRAWING TITLE

STD. DWG. NO.
AT 2

DGN File:L:\Standard.Drawings\Imperial\2017 Approved_Supplemental.Issues\Supp9Approved June - 2019\Backup1\AT02.dgn
01-JUL-2019

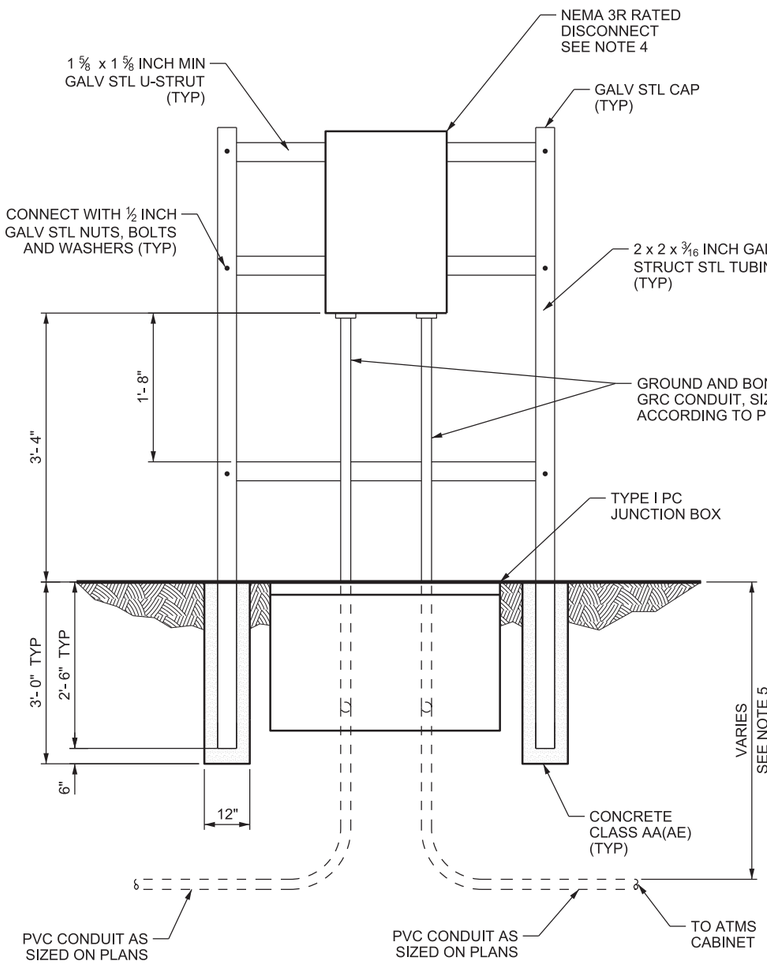


## A SUPPLEMENTAL DISCONNECT FRAME

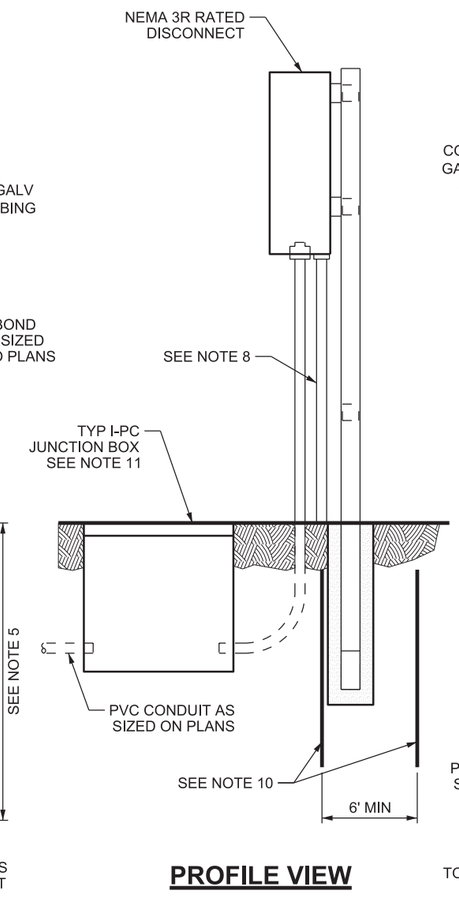


## PROFILE VIEW

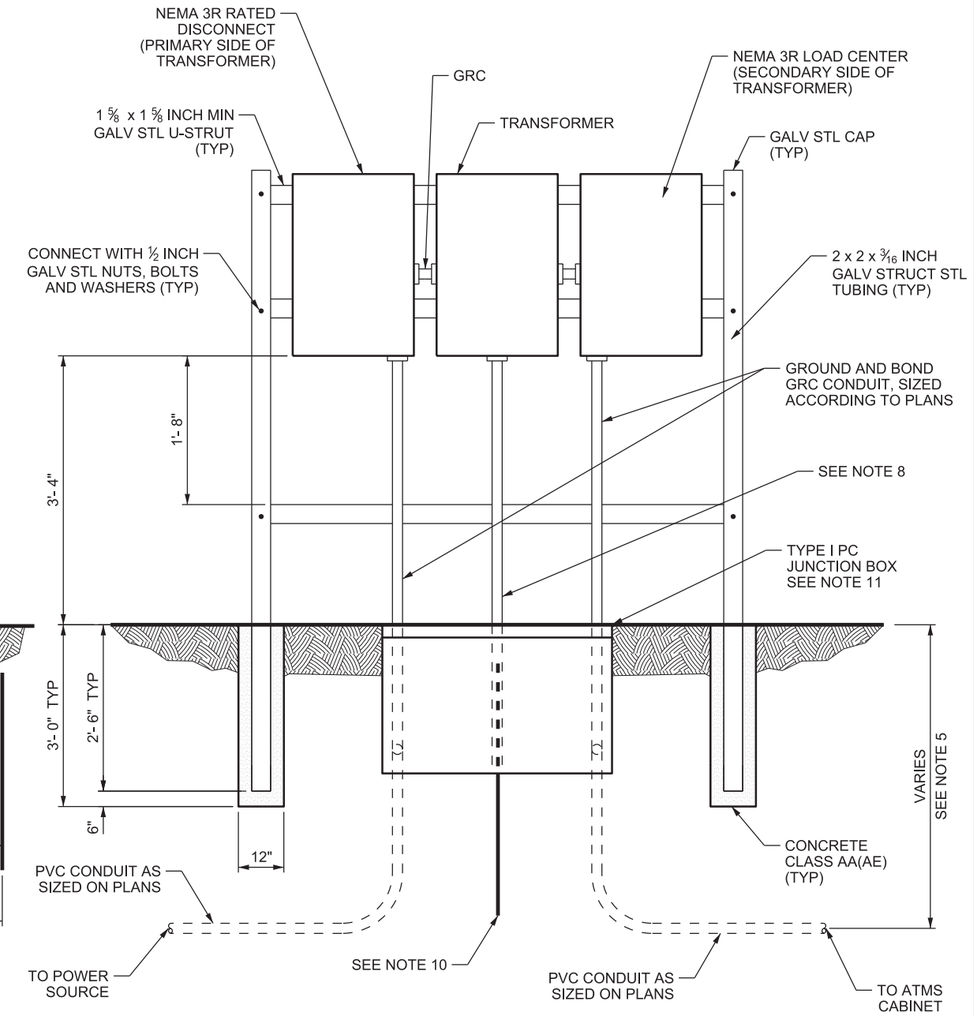


## B SUPPLEMENTAL DISCONNECT WITH TRANSFORMER FRAME

**NOTES:**

1. LOCATE FRAME 10 TO 15 FT FROM CABINET AND ATMS EQUIPMENT.
2. ROUND OFF SHARP EDGES OF STRUCTURAL TUBING. PAINT CUT ENDS OF FRAMING STRUTS WITH ZINC RICH PAINT.
3. APPLY CORROSION PROTECTION TO PORTION OF STRUT BELOW GRADE.
4. ATTACH TRANSFORMER, DISCONNECT AND LOAD CENTER TO FRAMING STRUT WITH WATERTIGHT GASKETS AND GALVANIZED HARDWARE.
5. REFER TO STANDARD SPECIFICATION 13553 FOR CONDUIT DEPTH.
6. USE ONLY FACTORY PRODUCED CONDUIT SWEEPS.
7. SIZE ENCLOSURE TO ACCOMMODATE CONDUIT SIZES PER PLAN.
8. INSTALL 1 INCH SCHEDULE 80 PVC AS PROTECTION FOR GROUNDING ELECTRODE CONDUCTOR.
9. ALL MATERIALS USED MUST BE RATED FOR THE VOLTAGE AND CURRENT AS SHOWN.
10. INSTALL 2 EACH 10 FT X 3/4 INCH GROUND RODS DIRECTLY BELOW SUPPORT FRAME, SPACED MINIMUM 6 FT APART AT TRANSFORMER LOCATIONS. INSTALL 6 AWG COPPER GROUNDING ELECTRODE CONDUCTOR BETWEEN GROUND RODS 6 INCHES BELOW GRADE AND BOND TO TRANSFORMER SECONDARY ACCORDING TO NEC ARTICLE 250 REQUIREMENTS.
11. LOCATE TYPE I PC JUNCTION BOX MINIMUM 6 FT AND MAXIMUM 10 FT FROM FRAME.

SUPPLEMENTAL DRAWING

REVISIONS

| NO. | DATE | APPR. | REMARKS |
|---|---|---|---|
| 3 | 6/27/19 | MMA | REMOVED SIZE OF GRC IN LEADER |
| 2 | 10/25/18 | JBY | CORRECTED CALL OUT, NOTE 1, ADDED |
| 1 | 8/31/17 | MMA | CORRECTED DIMENSION ERROR, ADDED REFERENCE TO NOTE 11 |

**UTAH DEPARTMENT OF TRANSPORTATION**
STANDARD DRAWINGS FOR ROAD AND BRIDGE CONSTRUCTION
SALT LAKE CITY, UTAH

RECOMMENDED FOR APPROVAL — JUN 27, 2019 DATE
CHAIRMAN STANDARDS COMMITTEE APPROVED — JUN 27, 2019 DATE
DEPUTY DIRECTOR

STANDARD DRAWING TITLE
ATMS CABINET AND EQUIPMENT DISCONNECT AND TRANSFORMER FRAME

STD. DWG. NO.
AT 9

DGN File:L:\Standard_Drawings\Imperial\2017 Approved_Supplemental_Issues\Supp9Approved June - 2019\Backup\AT09.dgn
01-JUL-2019

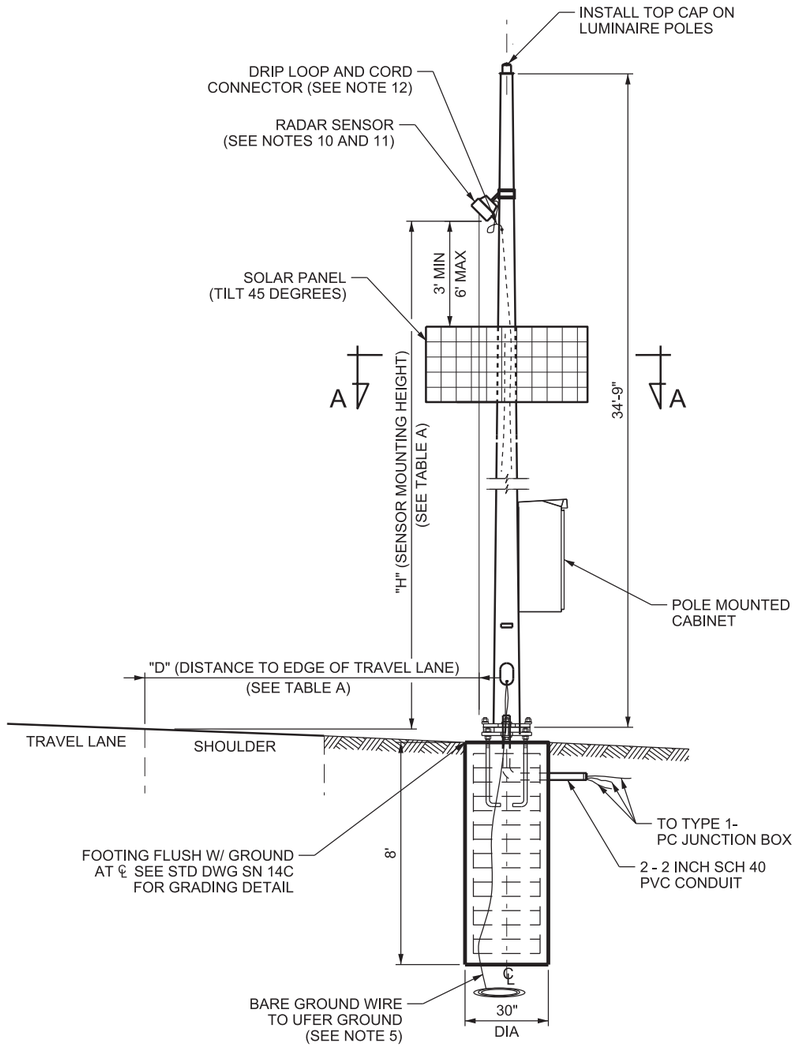


## A SOLAR TRAFFIC COUNTING STATION LAYOUT

REFER TO STD DWG SL 5B FOR FOUNDATION DETAILS
REFER TO STD DWG SL 5C FOR SLIP BASE DETAILS

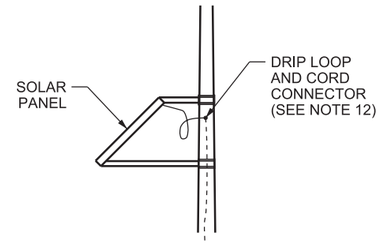


## SECTION A-A

SEE NOTES 1 AND 2

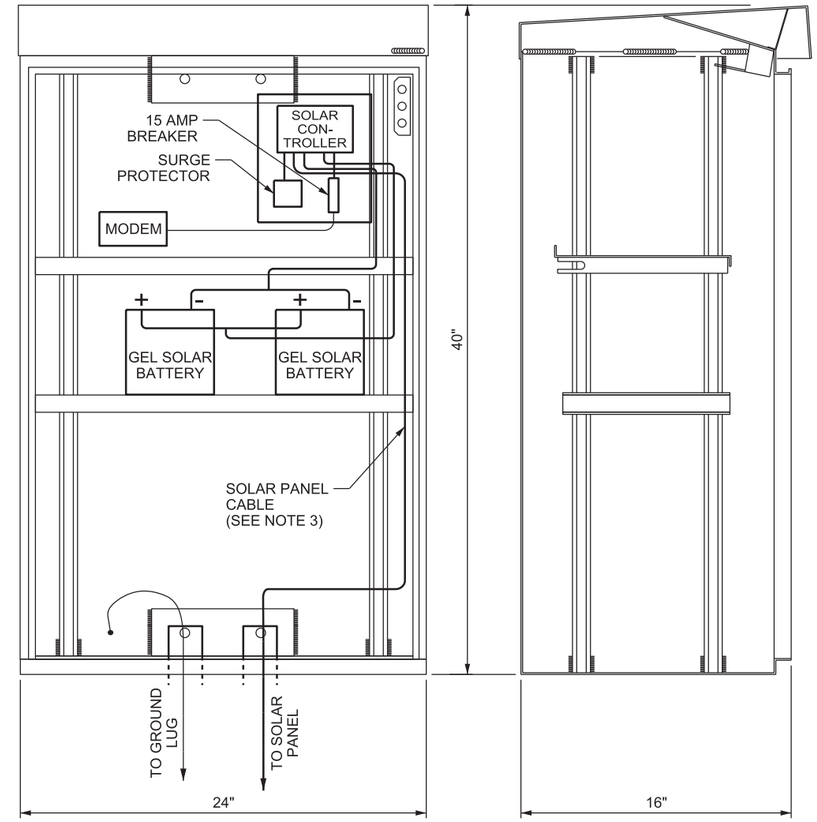


## FRONT VIEW

## SIDE VIEW

## C POLE MOUNTED CABINET DETAIL

REFER TO STD DWG AT-11C FOR MOUNTING DETAILS

**NOTES;**

1. ORIENT SOLAR PANEL TO FACE DUE SOUTH.
2. ADJUST SOLAR PANEL MOUNTING HEIGHT FROM SENSOR DETECTION AREA IF RADAR SENSOR IS FACING SOUTH. CONTACT UDOT TRAFFIC COUNTING SHOP THROUGH THE ENGINEER PRIOR TO CONSTRUCTION.
3. USE 12 AWG TYPE TC THHN-THWN-2 CONDUCTORS, 90 C 600V SUN RESISTANT DIRECT BURY SOLAR PANEL CABLE.
4. USE EPOXY COATED REBAR AND CLASS AA(AE) CONCRETE FOR FOUNDATIONS.
5. USE CONCRETE ENCASED ELECTRODE PER NEC 250.52.A.3.2 FOR GROUNDING (UFER GROUND).
6. CONTACT UDOT TRAFFIC COUNTING SHOP AT (801) 965-4092 FOR COUNTING MACHINE SPECIFICATIONS.
7. VERIFY POLE AND CONTROLLER CABINET LOCATION AND RADAR SENSOR HEIGHT.
8. PROTECT WITH AN APPROVED STANDARD BARRIER OR GUARDRAIL SYSTEM WHEN POLE PLACEMENT IS WITHIN CLEAR ZONE.
9. STATE FURNISHED ITEMS: SLIP BASE POLE, ANCHOR BOLTS, RADAR SENSOR, SOLAR PANEL AND MOUNTING BRACKET, CONTROLLER CABINET AND ALL INTERNAL COMPONENTS EXCLUDING SOLAR PANEL CABLE.
10. AIM RADAR SENSOR DURING FINAL INSPECTION.
11. REFER TO STD DWG AT 11B, DETAIL B FOR MOUNT ASSEMBLY DETAILS.
12. SUPPLY AND INSTALL CORD CONNECTOR. SIZE APPROPRIATELY FOR WIRE.

| OPTIMAL POLE & RADAR SENSOR LOCATION (FT) | |
|---|---|
| POLE "D" | 25 TO 35 |
| SENSOR "H" | 26 TO 30 |

## TABLE A

SEE NOTE 7

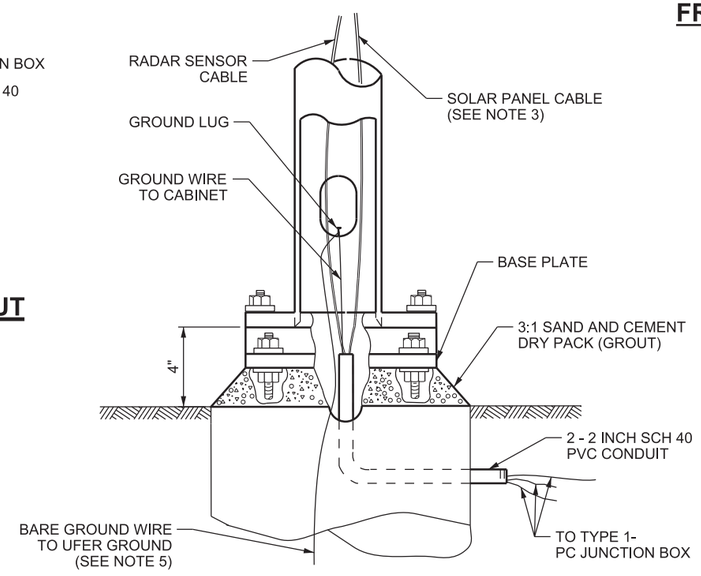


## B TYPICAL ELECTRICAL CONNECTIONS

REFER TO STD DWG SL 5B FOR ANCHOR BOLT DETAILS
REFER TO STD DWG SL 5C FOR SLIP BASE DETAILS

SUPPLEMENTAL DRAWING

| NO. | DATE | APPR. | REMARKS |
|---|---|---|---|
| 2 | 6/27/19 | JBY | UPDATED DRAWING REFERENCES AND NAME OF JUNCTION BOXES IN DETAIL A, B |
| 1 | 2/28/19 | CGW | REPLACED GROUND WITH POLE MOUNTED CABINET. ADDED SENSOR MOUNTING TABLE |

**UTAH DEPARTMENT OF TRANSPORTATION**
STANDARD DRAWINGS FOR ROAD AND BRIDGE CONSTRUCTION
SALT LAKE CITY, UTAH

RECOMMENDED FOR APPROVAL — JUNE 27, 2019 DATE
CHAIRMAN STANDARDS COMMITTEE APPROVED — JUNE 27, 2019 DATE
DEPUTY DIRECTOR

STANDARD DRAWING TITLE: SOLAR TRAFFIC COUNTING STATION

STD. DWG. NO. AT 14

DGN File:L:\Standard_Drawings\Imperial\2017 Approved_Supplemental_Issues\Supp9Approved June - 2019\Backup1\AT14.dgn
01-JUL-2019

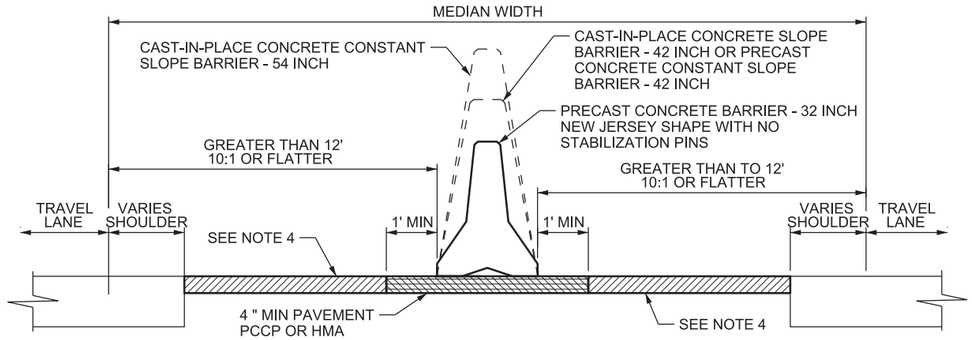


**MEDIAN WIDTH GREATER THAN 26 FEET**

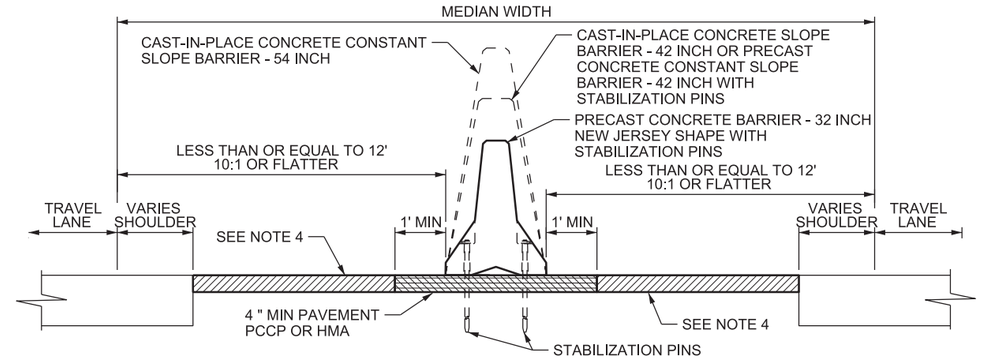


**MEDIAN WIDTH LESS THAN OR EQUAL TO 26 FEET**

## MEDIAN INSTALLATION

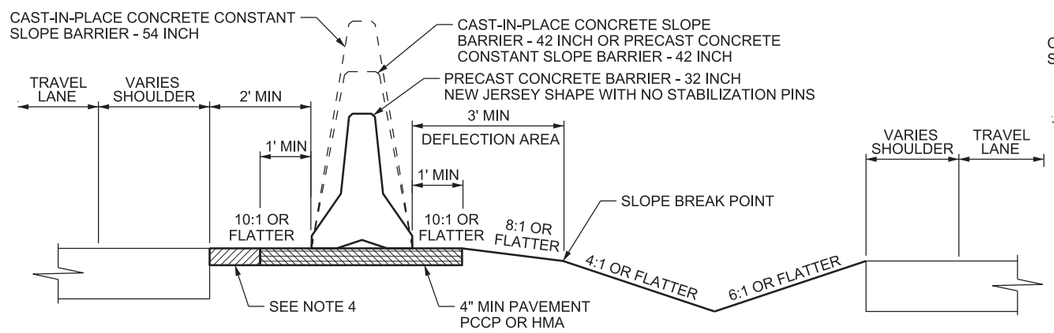


**PLACEMENT WITH DEFLECTION AREA**

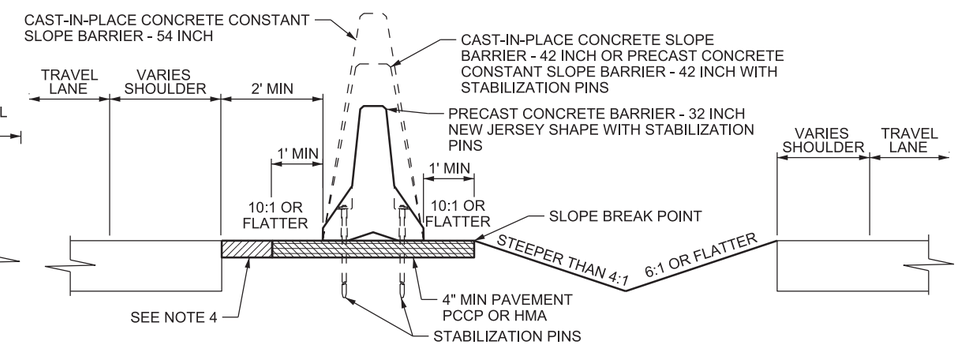


**PLACEMENT WITHOUT DEFLECTION AREA**

## MEDIAN INSTALLATION WITH OFFSET ROADWAY

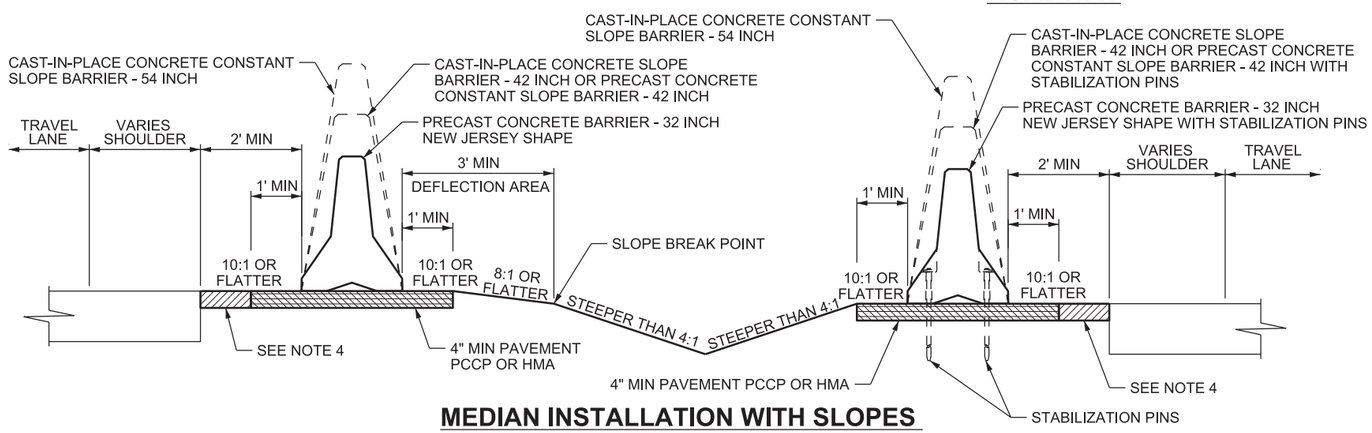


## MEDIAN INSTALLATION WITH SLOPES STEEPER THAN 4:1

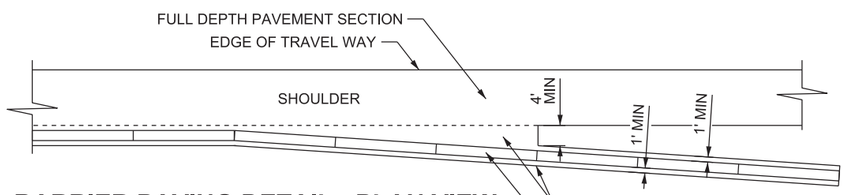


## BARRIER PAVING DETAIL - PLAN VIEW

SEE NOTE 4

**NOTES:**

1. PIN ALL PRECAST BARRIER SECTIONS TOGETHER AT CONNECTION LOOPS. PULL BARRIER TIGHT AFTER INSTALLING CONNECTION PIN.

2. P1 BARS IN CAST-IN-PLACE CONCRETE BARRIER ARE REQUIRED IN ALL APPLICATIONS. SEE CAST-IN-PLACE CONCRETE BARRIER DRAWINGS FOR REINFORCING STEEL REQUIREMENTS.

3. TEMPORARY WORK ZONE APPLICATIONS:
   - 3A. STABILIZATION PINS ARE NOT REQUIRED WHEN 1 FT OR MORE IS PROVIDED BEYOND THE BARRIER.
   - 3B. STABILIZATION PINS ARE REQUIRED WHEN SLOPE BEHIND THE 1 FT DISTANCE BEYOND THE BARRIER IS STEEPER THAN 2:1.
   - 3C. APPROVAL FROM THE REGION TRAFFIC ENGINEER IS REQUIRED TO USE STABILIZATION PINS IN LIEU OF THE 1 FT DISTANCE BEHIND THE BARRIER.
   - 3D. DO NOT PLACE STABILIZATION PINS IN NEW ROADWAY SURFACE FOR TEMPORARY BARRIER.
   - 3E. INSTALL APPROVED CRASH CUSHION OR END TREATMENT ON APPROACH ENDS. SEE GUIDELINES FOR CRASH CUSHION AND END TREATMENTS, CURRENT EDITION, WORK ZONE DEVICES.

4. PAVE AREAS LESS THAN 4 FT WIDE (BARRIER FACE TO EDGE OF PAVED SHOULDER) WITH 4 INCH MIN THICK PAVEMENT PCCP OR HMA. COMPACTED SHOULDER MATERIAL IS ALLOWED WHERE THE DISTANCE IS GREATER THAN 4 FT.

SUPPLEMENTAL DRAWING

REVISIONS

| NO. | DATE | APPR. | REMARKS |
|---|---|---|---|
| 1 | 6/27/19 | CGW | ADDED NOTE 4 AND PAVING DETAIL FOR MATERIAL BETWEEN SHOULDER AND BARRIER |

**UTAH DEPARTMENT OF TRANSPORTATION**
STANDARD DRAWINGS FOR ROAD AND BRIDGE CONSTRUCTION
SALT LAKE CITY, UTAH

RECOMMENDED FOR APPROVAL — JUN. 27, 2019 DATE
CHAIRMAN STANDARDS COMMITTEE APPROVED — JUN. 27, 2019 DATE
DEPUTY DIRECTOR

CONCRETE BARRIER MEDIAN INSTALLATION
STANDARD DRAWING TITLE

STD. DWG. NO.
BA 1B

DGN File:L:\Standard_Drawings\Imperial\2017 Approved_Supplemental_Issues\Supp9Approved June - 2019\Backup1\BA01B.dgn
01-JUL-2019

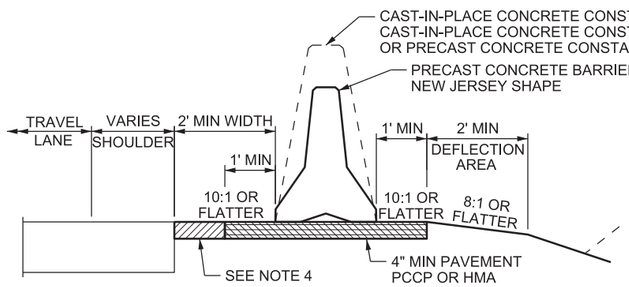


## PLACEMENT WITH DEFLECTION AREA

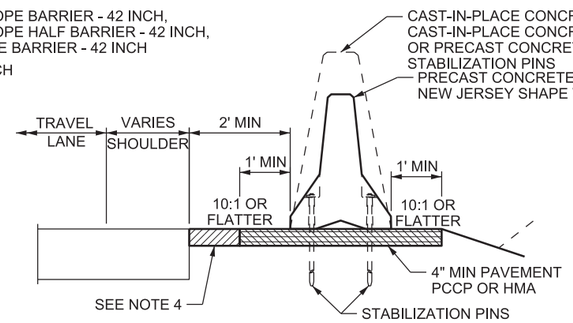


## PLACEMENT WITHOUT DEFLECTION AREA

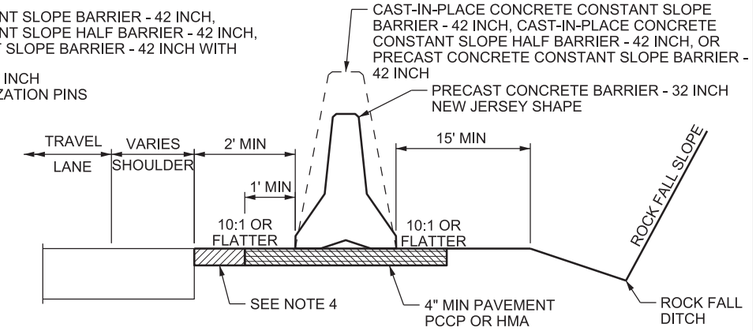


## PLACEMENT WITH ROCK FALL CONSIDERATIONS

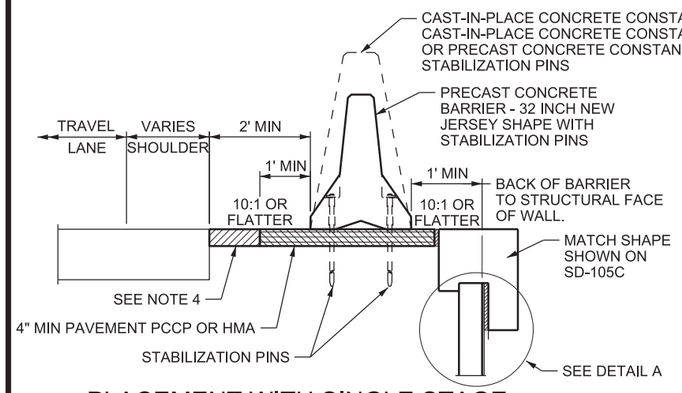


## PLACEMENT WITH SINGLE STAGE MSE OR RETAINING WALL

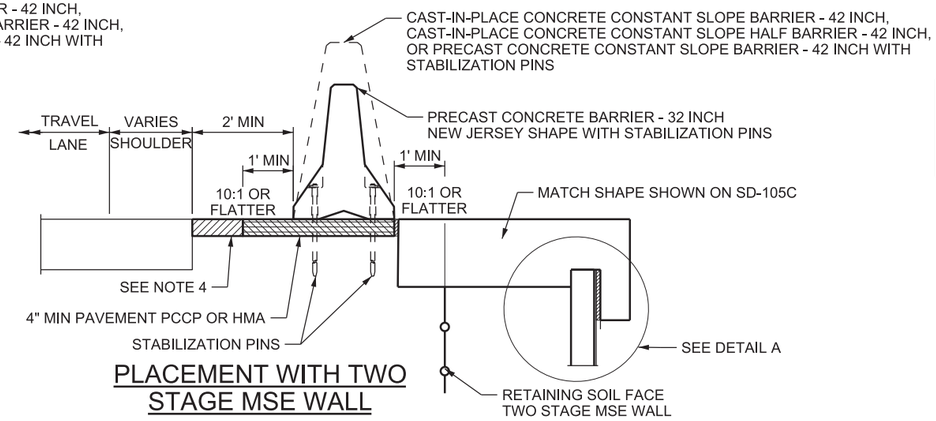


## PLACEMENT WITH TWO STAGE MSE WALL

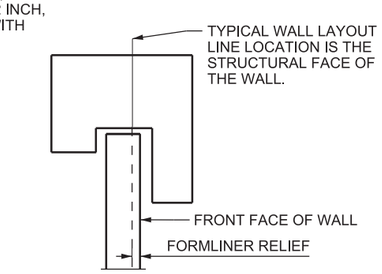


## DETAIL A

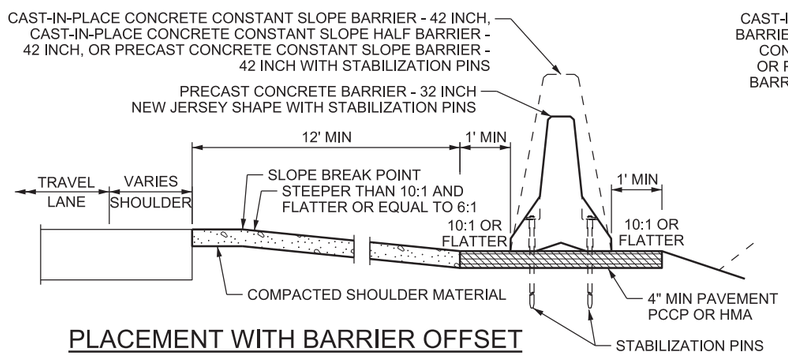


## PLACEMENT WITH BARRIER OFFSET

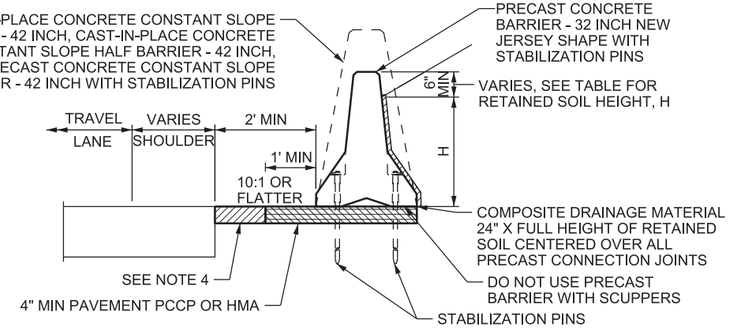


## RETAINING BARRIER

ENGINEER'S APPROVAL REQUIRED WITH VERIFICATION BY THE REGION PRECONSTRUCTION ENGINEER

| PERMISSIBLE RETAINED SOIL HEIGHT (H) | | |
|---|---|---|
| BARRIER TYPE | BACKSLOPE | |
| | 2:1 OR FLATTER | LEVEL WITH LL SURCHARGE * |
| PRECAST CONCRETE BARRIER - 32 INCH NEW JERSEY SHAPE | 26" | 13" |
| CAST-IN-PLACE CONCRETE CONSTANT SLOPE BARRIER - 42 INCH OR PRECAST CONCRETE CONSTANT SLOPE BARRIER - 42 INCH | 35" | 19" |
| CAST-IN-PLACE CONCRETE CONSTANT SLOPE HALF BARRIER - 42 INCH | 29" | 15" |

*ACCOUNTS FOR 2 FT OF EQUIVALENT SOIL FOR LIVE LOAD SURCHARGE.

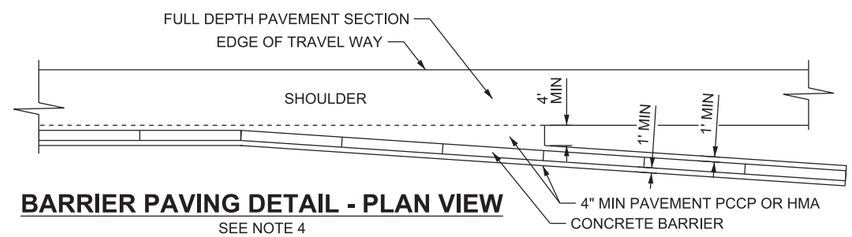


## BARRIER PAVING DETAIL - PLAN VIEW

SEE NOTE 4

**NOTES**

1. PIN ALL PRECAST BARRIER SECTIONS TOGETHER AT CONNECTION LOOPS. PULL BARRIER TIGHT AFTER INSTALLING CONNECTION PIN.
2. P1 BARS IN CAST-IN-PLACE CONCRETE BARRIER ARE REQUIRED IN ALL APPLICATIONS. SEE APPLICABLE CAST-IN-PLACE CONCRETE BARRIER DRAWINGS FOR REINFORCING STEEL REQUIREMENTS.
3. TEMPORARY WORK ZONE APPLICATIONS:
   - 3A. STABILIZATION PINS ARE NOT REQUIRED WHEN 1 FT OR MORE IS PROVIDED BEYOND THE BARRIER.
   - 3B. STABILIZATION PINS ARE REQUIRED WHEN SLOPE BEHIND THE 1 FT DISTANCE BEYOND THE BARRIER IS STEEPER THAN 2:1.
   - 3C. APPROVAL FROM THE REGION TRAFFIC ENGINEER IS REQUIRED TO USE STABILIZATION PINS IN LIEU OF THE 1 FT DISTANCE BEHIND THE BARRIER.
   - 3D. DO NOT PLACE STABILIZATION PINS IN NEW ROADWAY SURFACE FOR TEMPORARY BARRIER.
   - 3E. INSTALL APPROVED CRASH CUSHION OR END TREATMENT ON APPROACH ENDS. SEE GUIDELINES FOR CRASH CUSHION AND END TREATMENTS, CURRENT EDITION, WORK ZONE DEVICES.
4. PAVE AREAS LESS THAN 4 FT WIDE (BARRIER FACE TO EDGE OF PAVED SHOULDER) WITH 4 INCH MIN THICK PAVEMENT. COMPACTED SHOULDER MATERIAL IS ALLOWED WHERE THE DISTANCE IS GREATER THAN 4 FT.

SUPPLEMENTAL DRAWING

REVISIONS

| NO. | DATE | APPR. | REMARKS |
|---|---|---|---|
| 1 | 6/27/19 | CGW | ADDED NOTE 4 AND PAVING DETAIL FOR MATERIAL BETWEEN SHOULDER AND BARRIER |

UTAH DEPARTMENT OF TRANSPORTATION
STANDARD DRAWINGS FOR ROAD AND BRIDGE CONSTRUCTION
SALT LAKE CITY, UTAH

RECOMMENDED FOR APPROVAL — JUN. 27, 2019 DATE
CHAIRMAN STANDARDS COMMITTEE APPROVED — JUN. 27, 2019 DATE
DEPUTY DIRECTOR

STANDARD DRAWING TITLE: CONCRETE BARRIER SHOULDER INSTALLATION

STD. DWG. NO. BA 1C

DGN File: L:\Standard_Drawings\Imperial\2017 Approved_Supplemental_Issues\Supp9Approved June - 2019\Backup\BA01C.dgn
01-JUL-2019

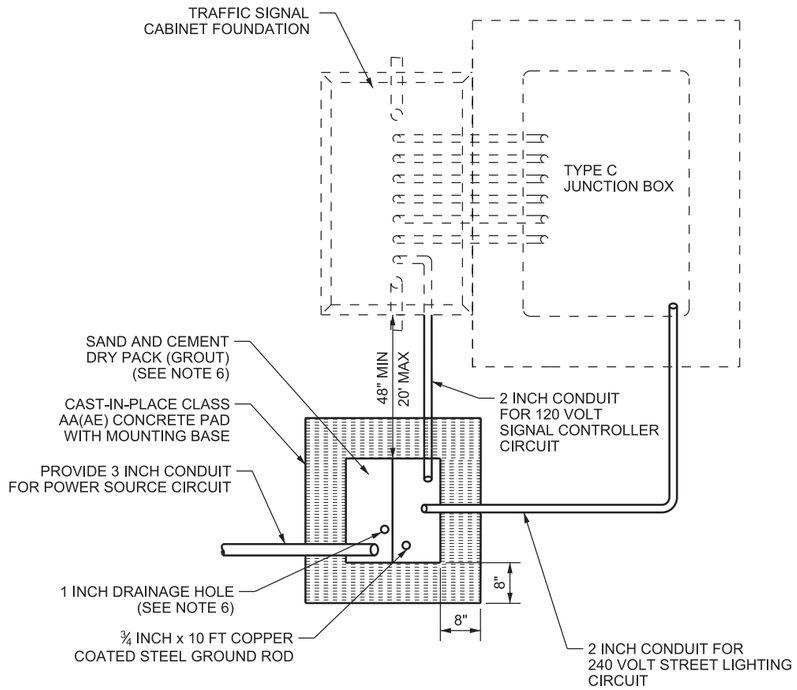


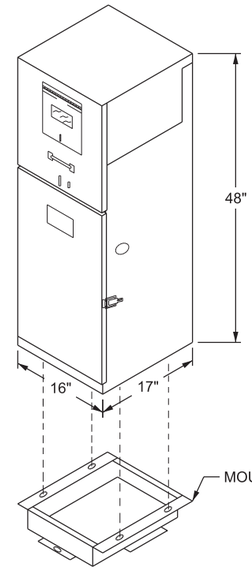


## SINGLE METER UNDERGROUND SERVICE PEDESTAL

(ACTUAL DIMENSIONS MAY VARY,
DIMENSIONS FOR INFORMATION ONLY)

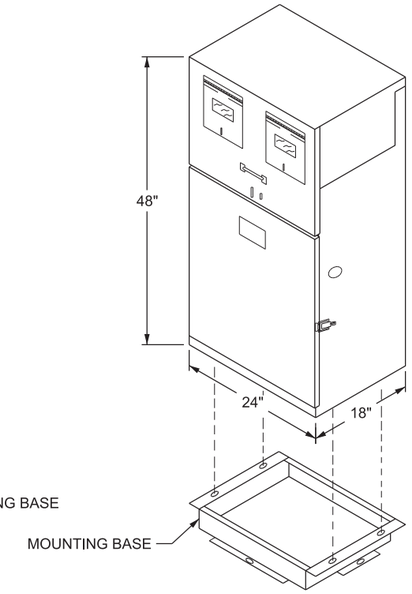


## DUAL METER UNDERGROUND SERVICE PEDESTAL

(ACTUAL DIMENSIONS MAY VARY,
DIMENSIONS FOR INFORMATION ONLY)

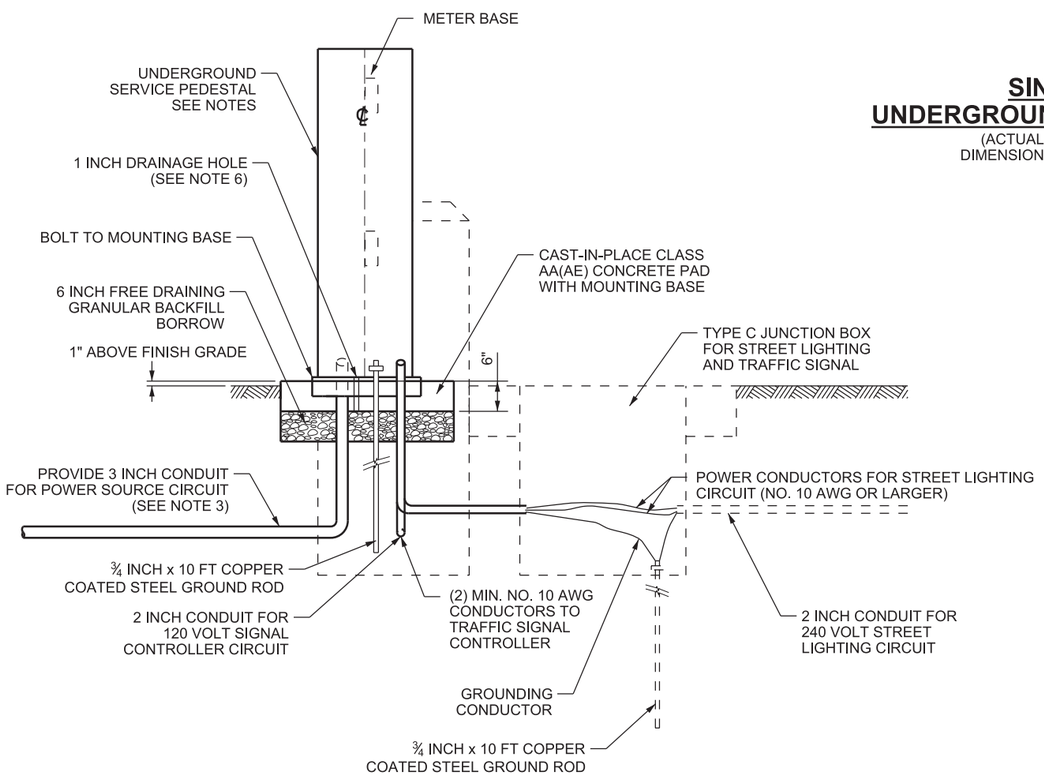


**NOTES:**

1. LOCATE SERVICE PEDESTAL ON EITHER SIDE OF TRAFFIC SIGNAL CABINET FOUNDATION AS SHOWN. LOCATION MAY BE MODIFIED TO BEST SUIT FIELD CONDITIONS WITH ENGINEER'S APPROVAL. MAINTAIN 48 INCH MINIMUM CLEARANCE AROUND EACH UNIT WITH DOORS OPENED TO ANY POSITION. PLACE UNDERGROUND SERVICE PEDESTAL WITHIN 20 FT OF CABINET.
2. LOCATE SERVICE PEDESTAL AND CONTROLLER SO WATER DRAINS AWAY FROM FOUNDATIONS AND JUNCTION BOXES. SITE PREPARATION, INCLUDING GRADING, MAY BE REQUIRED BEFORE PLACING EQUIPMENT.
3. PROVIDE SINGLE-PHASE, 3-WIRE, 100A SERVICE. COORDINATE WITH LOCAL UTILITIES REGARDING SERVICE CONDUCTORS.
4. PROVIDE UNDERGROUND SERVICE PEDESTAL PER STANDARD SPECIFICATION 16530 AND AS SPECIFIED IN THE CONTRACT DOCUMENTS.
5. SEE STD DWG SL 4D FOR JUNCTION BOX DETAILS.
6. INSTALL SAND AND CEMENT DRY PACK (GROUT) WITHIN MOUNTING BASE AFTER INSTALLATION OF CONDUITS AND GROUND ROD. PROVIDE 1-INCH DRAINAGE HOLE AT LOW POINT TO ALLOW DRAINAGE FROM TOP OF GROUT.
7. CAST PEDESTAL MOUNTING BASE INTO CONCRETE PEDESTAL PAD.
8. PROVIDE 6 FT MINIMUM LATERAL OFFSET BETWEEN GROUND RODS WITHIN SERVICE PEDESTAL AND TYPE C JUNCTION BOX.

SUPPLEMENTAL DRAWING

REVISIONS

| NO. | DATE | APPR. | REMARKS |
|---|---|---|---|
| 2 | 6/27/19 | MMA | ADDED NOTE 8. |
| 1 | 8/31/17 | JS | REVISED CALLOUTS AND NOTES. |

**UTAH DEPARTMENT OF TRANSPORTATION**
STANDARD DRAWINGS FOR ROAD AND BRIDGE CONSTRUCTION
SALT LAKE CITY, UTAH

RECOMMENDED FOR APPROVAL — JUN. 27, 2019 DATE
CHAIRMAN STANDARDS COMMITTEE APPROVED — JUN. 27, 2019 DATE
DEPUTY DIRECTOR

UNDERGROUND SERVICE PEDESTALS
STANDARD DRAWING TITLE

STD. DWG. NO.
SL 4C

DGN File:L:\Standard Drawings\Imperial\2017 Approved_Supplemental Issues\Supp9Approved June - 2019\Backup1\SL04C.dgn
01-JUL-2019

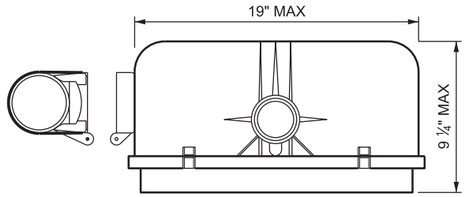


**TOP VIEW**

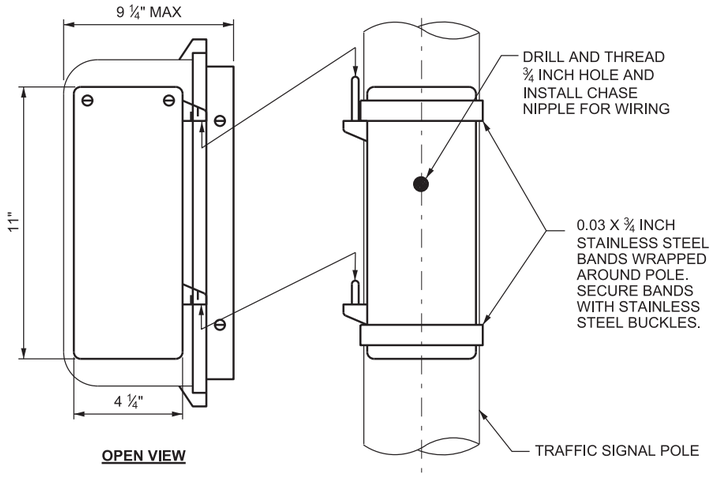


**OPEN VIEW**

**TYPICAL MOUNTING OF PEDESTRIAN SIGNAL AND PUSH BUTTON ON A SIGNAL POLE**

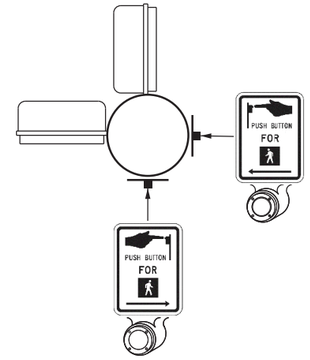


**MOUNTING OF PEDESTRIAN SIGNAL ON A SINGLE SIGNAL POLE**

(NOTE 6)

# CLAMSHELL MOUNTING HARDWARE

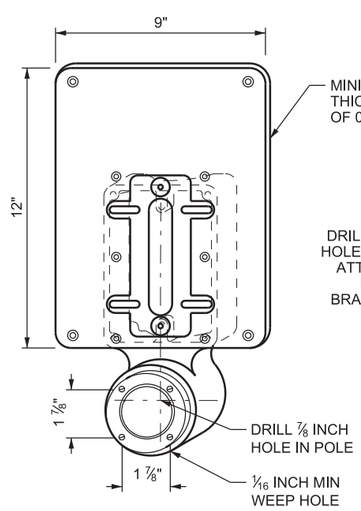


**OPTION 1**

FRAME TO ACCOMMODATE 5 X 7 INCH SIGN WITH ADAPTOR PLATE FOR 9 X 12 INCH SIGN

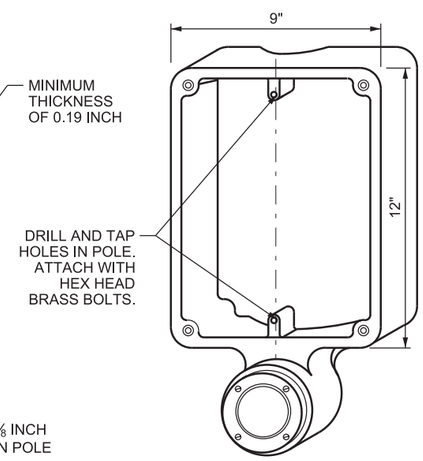


**OPTION 2**

FRAME TO ACCOMMODATE 9 X 12 INCH SIGN

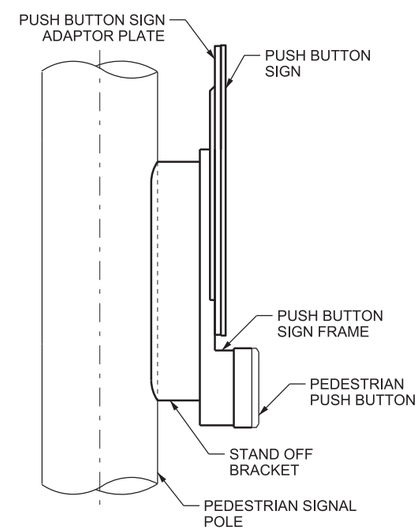


**PUSH BUTTON FRAME STAND OFF BRACKET**

(OPTION 1 SHOWN)
(NOTE 5)

**NOTES**

1. MOUNT PEDESTRIAN SIGNAL HEADS 9 FT 3 INCHES +/- 6 INCHES VERTICAL CLEARANCE FROM TURNING SPACE TO BOTTOM OF PEDESTRIAN SIGNAL HOUSING.
2. MOUNT PUSH BUTTONS 42 ± 2 INCHES ABOVE TURNING SPACE. MAX. HEIGHT OF 46 INCHES AND MIN. OF 36 INCHES MAY BE ALLOWED UPON APPROVAL OF THE ENGINEER.
3. MOUNT PUSH BUTTON 10 INCHES OR LESS FROM EDGE OF A TURNING SPACE COMPLIANT AREA PER STANDARD DRAWING PA SERIES. MAXIMUM DISTANCE OF 18 INCHES MAY BE ALLOWED UPON APPROVAL OF THE ENGINEER.
4. INSTALL PUSH BUTTONS AND PEDESTRIAN SIGNAL HEADS PARALLEL TO CROSSWALKS.
5. PROVIDE FRAME STANDOFF BRACKETS WHEN MOUNTING TWO SIGN FRAMES TO ONE PEDESTRIAN POLE.
6. PROVIDE DOUBLE SIDED (R10-3L, R10-3R) SIGN ON OPPOSITE FACES. POINT ARROW ON SIGN IN DIRECTION PEDESTRIAN WILL PROCEED ACROSS ROADWAY.

SUPPLEMENTAL DRAWING

REVISIONS

| NO. | DATE | APPR. | REMARKS |
|---|---|---|---|
| 1 | 6/27/19 | JS | REMOVED SIGN DETAIL, REVISED NOTES, ADDED PLACEMENT DETAIL |
| 1 | 2/22/18 | JS | UPDATED NOTES. |

**UTAH DEPARTMENT OF TRANSPORTATION**
STANDARD DRAWINGS FOR ROAD AND BRIDGE CONSTRUCTION
SALT LAKE CITY, UTAH

RECOMMENDED FOR APPROVAL — JUN. 27, 2019 DATE

CHAIRMAN STANDARDS COMMITTEE APPROVED — JUN. 27, 2019 DATE

DEPUTY DIRECTOR

STANDARD DRAWING TITLE
PEDESTRIAN SIGNAL ASSEMBLY

STD. DWG. NO.
SL 6A

DGN File:L:\Standard Drawings\Imperial\2017 Approved_Supplemental Issues\Supp9Approved June - 2019\Backup1\SL06A.dgn
01-JUL-2019

# Supplemental Issue, August 29, 2019

## Supplemental Specifications

| | |
|---|---|
| 00747M | Dispute Review Board |
| 01455 | Material Quality Assurance **(Title Change)** |
| 01457 | Aggregate Source Control **(New Specification)** |
| 01554 | Traffic Control |
| 02753M | Full Depth Slab Replacement for Concrete Pavements |
| 03211 | Reinforcing Steel and Welded Wire |
| 13556M | Closed Circuit Television (CCTV) Assembly |

## Supplemental Drawings

| | |
|---|---|
| AT 10A | Axis CCTV Mounting Detail and Wiring Diagram |
| AT 10B | CCTV Mounting Detail and Wiring Diagram |
| AT 10C | CCTV Mounting Detail and Wiring Diagram **(DELETION)** |
| AT 10D | Camera Cable Splicing Diagrams **(DELETION)** |
| AT 10E | CCTV Dip Switch Settings **(DELETION)** |
| AT 11A | CCTV Pole Mounting Details |
| AT 11B | Non-Intrusive Detector Mounting Details |
| BA 1A1 | Concrete Barrier General Notes and Standard Details 1 of 2 |
| BA 1D | Concrete Barrier Layout |
| BA 2A | Precast Concrete Barrier – 32 Inch New Jersey Shape |
| BA 2B | Precast Concrete Barrier – 32 Inch New Jersey Shape, Sloped End Section (For Speeds ≤ 40 MPH) |
| BA 2C | Precast Concrete Barrier – 32 Inch New Jersey Shape, Median Small Sign Section **(DELETION)** |
| BA 2D | Cast-In-Place Concrete Barrier – 32 Inch New Jersey Shape, 42 Inch Constant Slope Barrier Transition |
| BA 2E | Precast Concrete Half Barrier – 32 Inch New Jersey Shape |
| BA 3A1 | Cast-In-Place Concrete Constant Slope Barrier- 42 Inch 1 of 3 |
| BA 3A2 | Cast-In-Place Concrete Constant Slope Barrier- 42 Inch 2 of 3 |
| BA 3A4 | Cast-In-Place Concrete Constant Slope Barrier with Scuppers - 42 Inch |
| BA 3B | Cast-In-Place Concrete Constant Slope Barrier- 42 Inch Electrical Details |
| BA 3C1 | Cast-In-Place Concrete Constant Slope Barrier- 42 Inch, Sign Structure Foundation Transition 1 of 2 |
| BA 3D | Cast-In-Place Concrete Constant Slope Barrier- 42 Inch, Median Small Sign Section **(DELETION)** |
| BA 3E1 | Cast-In-Place Concrete Constant Slope Barrier- 42 Inch, TL-5 1 of 2 |
| BA 3E3 | Cast-In-Place Concrete Constant Slope Barrier with Scuppers - 42 Inch TL-5 |
| BA 3F1 | Cast-In-Place Concrete Constant Slope Barrier- 42 Inch, Bridge Parapet Transition 1 of 3 |
| BA 3F2 | Cast-In-Place Concrete Constant Slope Barrier- 42 Inch, Bridge Parapet Transition 2 of 3 |
| BA 3G | Precast Concrete Constant Slope Barrier- 42 Inch |
| BA 3H | Precast Concrete Constant Slope Barrier- 42 Inch, Sloped End Section (For Speeds ≤ 40 MPH) |
| BA 3I1 | Precast Concrete Constant Slope Barrier- 42 Inch, Median Small Sign Section 1 of 2 |
| BA 3J | Precast Concrete Constant Slope Barrier- 42 Inch, 32 Inch New Jersey Shape Transition |
| BA 3K1 | Cast-In-Place Concrete Constant Slope Half Barrier- 42 Inch |
| BA 3K2 | Cast-In-Place Concrete Constant Slope Half Barrier with Scuppers - 42 Inch |
| BA 3K3 | Cast-In-Place Concrete Constant Slope Half Barrier- 42 Inch |

| | |
|---|---|
| BA 3K5 | Cast-In-Place Concrete Constant Slope Half Barrier- 42 Inch Constant Slope, 32 Inch New Jersey Shape Barrier Transition |
| BA 3L | Precast Concrete Constant Slope Half Barrier- 42 Inch |
| BA 3M1 | Cast-In-Place Concrete Constant Slope Barrier- 54 Inch 1 of 3 |
| BA 3M2 | Cast-In-Place Concrete Constant Slope Barrier- 54 Inch 2 of 3 |
| BA 3M4 | Cast-In-Place Concrete Constant Slope Barrier with Scuppers - 54 Inch |
| BA 3N1 | Cast-In-Place Concrete Constant Slope Barrier- 54 Inch, Median Small Sign Section 1 of 2 **(DELETION)** |
| BA 3N2 | Cast-In-Place Concrete Constant Slope Barrier- 54 Inch, Median Small Sign Section 2 of 2 **(DELETION)** |
| BA 3O1 | Cast-In-Place Concrete Constant Slope Barrier- 54 Inch, TL-5 1 of 3 |
| BA 3O2 | Cast-In-Place Concrete Constant Slope Barrier- 54 Inch, TL-5 2 of 3 |
| BA 3O4 | Cast-In-Place Concrete Constant Slope Barrier with Scuppers - 54 Inch, TL-5 |
| BA 3P1 | Cast-In-Place Concrete Constant Slope Barrier- 54 Inch, Bridge Parapet Transition 1 of 3 |
| BA 3P2 | Cast-In-Place Concrete Constant Slope Barrier- 54 Inch, Bridge Parapet Transition 2 of 3 |
| BA 3Q1 | Cast-In-Place Concrete Constant Slope Barrier- 54 Inch, 42 Inch Constant Slope Barrier Transition |
| BA 3Q2 | Cast-In-Place Concrete Constant Slope Barrier- 54 Inch, 32 Inch New Jersey Shape Barrier Transition |
| GW 1A | Raised Island |
| GW 7A | Delineation Application |
| PA 06 | Roundabout, Transit Shelter, and On-Street Parking |
| RR 06 | Pedestrian Controls Street Running Railroad Alignment Signalized Intersections |
| RR 07 | Pedestrian Controls Street Running Railroad Alignment Unsignalized Intersections |
| SL 6D | Overhead Flashing Beacon at an Intersection Crosswalk |
| SL 6E | Post-Mounted Flashing Beacon at an Intersection Crosswalk |
| SL 6F | Overhead Flashing Beacon at a Midblock Crosswalk |
| SL 6G | Post-Mounted Flashing Beacon at a Midblock Crosswalk |
| ST 01 | Typical Pavement Markings **(TITLE CHANGE)** |
| ST 02 | Passing Lane Detail **(DELETION)** |
| ST 02 | School Crossing and School Message **(NEW DRAWING. Renumbered ST 08)** |
| ST 03 | Contrast Pavement Markings for Concrete Pavement **(NEW DRAWING. Renumbered ST 09)** |
| ST 03A | Freeway Climbing Lane Inside Widening Detail **(DELETION)** |
| ST 03B | Freeway Climbing Lane Outside Widening Detail **(DELETION)** |
| ST 04 | Entrance Ramp Pavement Markings **(DELETION)** |
| ST 05 | Exit Ramp Pavement Markings **(DELETION)** |
| ST 06 | Intersection Pavement Markings **(DELETION)** |
| ST 07 | Crosswalks, Parking, and Intersection Approached **(DELETION)** |
| ST 08 | School Crossing and School Message **(DELETION, renumbered as ST 2)** |
| ST 09 | Contrast Pavement Markings for Concrete Pavement **(DELETION, renumbered as ST 03)** |
| ST 10 | Bicycle Lane Pavement Markings (Sheet 1 of 2) **(DELETION)** |
| ST 11 | Bicycle Lane Pavement Markings (Sheet 2 of 2) **(DELETION)** |
| ST 12 | Location of Bicycle Detector Pavement Messages at Intersection **(DELETION)** |
| ST 13 | Two-Lane Intersection Pavement Markings (Sheet 1 of 2) **(DELETION)** |
| ST 14 | Two-Lane Intersection Pavement Markings (Sheet 2 of 2) **(DELETION)** |
| ST 15 | Preferential Lane Signing and Pavement Marking Details **(DELETION)** |
| ST 16 | Preferential Lane Access Opening Details **(DELETION)** |
| ST 17 | Preferential Lane Median Signing Spacing Greater 1 Mile **(DELETION)** |
| ST 18 | Preferential Lane Median Signing Spacing Equal to or Less than 1 Mile **(DELETION)** |

**Supplemental Specification**
**2017 Standard Specification Book**

**SECTION 00747M**

# DISPUTE REVIEW BOARD

**Delete 1.7 B and replace with the following:**

B. The Department in conjunction with the Associated General Contractors of Utah (AGC) maintains a list of suggested DRB candidates experienced in construction processes, interpretation of contract documents, and resolution of construction disputes. List available at: http://www.udot.utah.gov/go/standardsreferences

1. The DRB members may be selected from this list or other qualified individual or individuals agreeable to both the Department and the Contractor.
2. The Board member must be experienced in highway or transportation projects or both.
3. DRB members must be neutral, act impartially and in the best interest of the project, and be free of any conflict of interest.

**Supplemental Specification**
**2017 Standard Specification Book**

**SECTION 01455**

# MATERIAL QUALITY ASSURANCE

**Delete Section 01455 in its entirety and replace with the following:**

## PART 1 GENERAL

### 1.1 SECTION INCLUDES

A. Materials Quality Assurance

B. Buy America

### 1.2 RELATED SECTIONS- Not Used

### 1.3 REFERENCES

A. UDOT Materials Manual of Instruction

B. UDOT Minimum Sampling and Testing Requirements

C. Code of Federal Regulations (CFR)

### 1.4 DEFINITIONS

A. Authorized Products List (APL) – A listing of manufactured products that have been verified as meeting the requirements in the standard specifications.

### 1.5 SUBMITTALS

A. Permission agreements for storing materials on private property**.**

B. Certifications of Compliance for all steel and iron products used on federal-aid projects demonstrating compliance with Buy America requirements for approval before delivery to project site.
   1. Refer to this Section, Article 1.11 for Buy America requirements.
   2. Include at least the following for domestic steel and iron products:
      a. Signed mill test report.

b. Signed certification by each Fabricator and Manufacturer that has handled the steel or iron product affirming that every process, including the application of a coating, performed on the steel or iron product has been carried out in the United States.

c. Material descriptions, quantities, and means of material identification such as heat numbers, lot numbers, and other industry identification markings for each process the material underwent so the final product can be tracked through a step process from smelting to final product.

3. Tracking quantities is not required for coating operations and for mill certifications.

C. Cost documentation for use of foreign steel or iron on federal-aid projects for approval before payment and incorporation into the project, when applicable.

1. Include at least the following:

a. Documentation that tracks the use of permanent foreign steel incorporated into the project.

b. Material invoices documenting the material cost to the Contractor from the supplier as delivered to the site, not the Contractor's bid price.

c. Total cost and percent of total contract amount showing that the cost of the foreign steel and iron does not exceed Buy America requirements

## 1.6 MATERIALS QUALITY ASSURANCE

A. Prequalification of Suppliers

1. Use a Department pre-qualified supplier according to the Quality Management Plans (QMP) listed for the following materials:

a. Cement – QMP 502

b. Reinforcing Steel Epoxy – QMP 503

c. Reinforcing Steel – QMP 504

d. Precast / Prestressed Concrete Structures – QMP 505

e. Ready Mix Concrete – QMP 506

f. Flyash and Pozzolan – QMP 507

g. Asphalt Emulsion – QMP 508

h. Asphalt Binder – QMP 509

i. Hydrated Lime – QMP 510

j. Reinforcing Steel Galvanized Coating – QMP 512

k. Pavement Marking Paint – QMP 513

l. Hot Mix Asphalt – QMP 514

2. Products delivered by suppliers who are not qualified or who lose qualification during the project will be rejected.

B. Authorization of Materials Before Use Based on Manufacturer Information.

1. The contract designates manufactured materials that can be incorporated in the work when authorized before use based upon manufacturer information.

   a The manufacturer information required for authorization is specified in the technical specifications as submittals.

   b. APL Compliance Form

      1) Manufactured materials can be incorporated in the work only if listed on the APL when the APL Compliance Form is listed as a submittal in the technical specifications. The APL Compliance Form and application to submit products for placement on the APL can be found on the UDOT website.

      2) Materials not listed on the APL when the technical specifications list the APL Compliance Form as a submittal will not be authorized for use.

   c. Certificates of Compliance

      1) Manufactured materials and assemblies can be incorporated in the work if accompanied by a manufacturer's Certificate of Compliance when a Certificate of Compliance is listed as a submittal in the technical specifications. Includes the following:

         a. Project number and description, location, and Contractors' name;

         b. Manufacturer's name, along with the material source location and point of manufacture or assembly;

         c. Identification of the party the material was sold or supplied to;

         d. Lot identification or manufacturer's identification of the certified materials or assemblies delivered to the project;

         e. Reference to the technical section or requirement of the contract specifications fulfilled through certification along with test reports, when applicable; and

         f. Statement that the materials or assemblies comply with the particular requirements of the contract cited above and signed by a manufacturer's representative in a position to legally bind the manufacturer.

2). The Department may sample and test materials or assemblies used on the basis of Certificates of Compliance and reject if determined not to meet contract requirements.

d. Manufacturer's product data sheets and installation instructions

1). Materials may be incorporated into the project based on information provided through manufacturer's product data sheets and installation instructions when listed as a submittal in the technical specifications..

2). Provide sufficient information to demonstrate conformance with product requirements before incorporating the product into the work.

3). Installation instructions supplement Part 3 Execution requirements of technical Sections; in case of conflict, the more stringent requirements apply.

4). APL Compliance Form may be submitted in lieu of product data sheets and installation instructions if the product is listed in the Department's APL.

C. Verification

1. Inspection

a. The Department field verifies material properties and their incorporation into the project as required in the technical specifications.

2. Sampling and Testing

a. The Department verifies certain properties of work for acceptance using sampling and testing.

b. Only those properties determined by a certain test are considered accepted by that test.

c. The UDOT Minimum Sampling and Testing Requirements and the UDOT Materials Manual of Instruction define procedures for anyone performing tests for verification.

d. The Department does not allow contract time extension for or as a result of testing.

e. The Department may deduct from payment due the costs for retesting of materials made necessary by the Contractor's activities.

f. Laboratories and technicians must be qualified according to the requirements of the UDOT Materials Manual of Instruction to perform materials sampling and testing.

D. Other
   1. Materials and products of work where method for authorization or verification is not defined in the technical specification may be verified for conformance by any of the methods listed in this Article as determined by the Engineer.

## 1.7 SUPPLY SOURCE AND QUALITY REQUIREMENTS

A. Notify the Engineer of the proposed source of materials to be used before their delivery.

B. The Department encourages the re-use of industrial byproducts that meet contract requirements.
   1. Use new materials for the work in cases where industrial byproducts do not meet contract requirements.

C. Required testing for aggregate sources will be deemed invalid unless testing occurred within a year of submittal.

## 1.8 PLANT INSPECTION

A. The Department may inspect and test materials at the acquisition, manufacturing, or supplying source for compliance with specified manufacturing methods.

B. Cooperate fully and assist the Engineer during the inspection and testing.
   1. Allow the Engineer full access to all parts of the plant used to manufacture or produce materials.
   2. Provide and maintain adequate safety measures.
   3. Provide mechanisms for providing samples during inspections.
      a. Equip crushing or screening facilities with automatic or semiautomatic mechanical sampling devices.

## 1.9 MATERIAL STORAGE AND HANDLING

A. Store and handle materials according to manufacturer requirements.

B. Transport bulk materials in a manner to prevent loss or segregation after loading and measuring.

C. Store materials so they can be easily inspected and tested.

D. Restore storage and plant sites to their original condition.

E. Do not store materials and equipment on bridge decks and in areas that add loads to bridge elements.

## 1.10 DEPARTMENT FURNISHED MATERIALS

A. Schedule, pickup, and deliver Department furnished materials to install at the specified site.
   1. Receive, inventory, store, protect, distribute and install at site as specified.

B. Contractor is responsible for all materials received. The Department deducts from money due the Contractor for the following:
   1. Shortages, deficiencies, and damage that may occur to the material after physical transference from the Department.
   2. The demurrage charges resulting from failure to accept the material at the designated time and point of delivery.

C. The terms Department furnished, State furnished, and owner furnished are used interchangeably throughout the contract documents to mean components for specific use in the project that are provided by an entity other than the Contractor.

## 1.11 BUY AMERICA

A. Federal-aid projects are subject to Title 23 CFR Part 635.410, Buy America requirements.
   1. All products manufactured from steel and iron must be manufactured in the United States to be considered domestic.
      a. All manufacturing processes of the steel and iron material in a product such as melting, rolling, extruding, machining, bending, grinding, drilling, and coating must occur within the United States.
      b. Coating includes all processes that protect or enhance the value of the material to which the coating is applied. The material applied as a coating is not subject to Buy America requirements.
   2. The above requirement does not preclude a minimal use of foreign steel or iron, provided the cost of the steel or iron used does not exceed one tenth of one percent (0.1 percent) of the total contract amount or $2,500, whichever is greater.
      a. Track the use of all permanent foreign steel incorporated in the project.
   3. The following are exempt from Buy America except as noted:
      a. Temporary steel or iron materials.
      b. Materials left in place for the Contractor's convenience that could be removed without damaging the completed work.

c. Items such as nuts, bolts, washers, screws, concrete chairs, spacers, mailboxes, and other steel or iron parts that may be considered miniscule or non-structural to the whole of the project.

d. Fencing stays, clips, staples, or other miscellaneous fencing components.

e. Manufactured assemblies that are less than 51 percent by weight steel or iron content when they are delivered to the job site for installation.

1) Precast items such as pipe, manholes, and drainage boxes must meet the Buy America requirements.

f. The major steel and iron components of the following and other similar assemblies must meet the Buy America requirements:

1) Guardrail, guardrail posts, end sections, terminals, cable barrier, steel or iron pipe, conduit, grates, manhole covers and risers, mast arms, poles, standards, trusses, supporting structural members for signs, luminaires, and traffic control systems.

## 1.12 CONVICT PRODUCED MATERIALS

A. Federal-aid projects are subject to Title 23, Code of Federal Regulations, CFR Part 635.417, Convict Produced Materials.

1. Materials produced after July 1, 1991, by convict labor may only be incorporated in a Federal-aid highway construction project if such materials have been:

a. Produced by convicts who are on parole, supervised release, or probation from a prison.

b. Produced in a qualified prison facility and the cumulative annual production amount of such materials for use in Federal-aid highway construction does not exceed the amount of such materials produced in such facilities for use in Federal-aid highway construction during the 12-month period ending July 1, 1987.

## PART 2 PRODUCTS Not Used

## PART 3 EXECUTION Not Used

END OF SECTION

**Supplemental Specification**
**2017 Standard Specification Book**

**SECTION 01457**

# AGGREGATE SOURCE CONTROL

**Add Section 01457**

## PART 1 GENERAL

### 1.1 SECTION INCLUDES

A. Aggregate source sites.

### 1.2 RELATED SECTIONS

A. Section 02911: Hydraulic Erosion Control Products

B. Section 02922: Seed, Turf Seed, and Turf Sod

### 1.3 REFERENCES

A. UDOT Form C-200, Certificate of Receipt and Release by Property Owner

### 1.4 DEFINITIONS Not Used

### 1.5 SUBMITTALS

A. Copies of test reports for all aggregate sources for approval.
   1. Required tests are listed in the technical specifications.

B. Materials site plan for Department furnished aggregate sources for approval.
   1. Show in detail the line and grades of material removal.

C. Completed UDOT Form C-200 for review.

### 1.6 AGGREGATE SUPPLY SOURCE AND QUALITY REQUIREMENTS

A. Notify the Engineer and obtain approval of the proposed source of materials to be used before delivery of materials.

## 1.7 DEPARTMENT FURNISHED AGGREGATE SOURCES

A. Possible sources of local optional materials may be available.
   1. Expect variations in quantity and quality.

B. Obtain approval to use source material based on quality tests using a Department qualified laboratory.

C. Strip and stockpile topsoil before removing any materials.

## 1.8 CONTRACTOR FURNISHED AGGREGATE SOURCES

A. Acquire the rights to remove materials and enter into agreement with owner that specifies requirements for grading and reclamation after removing materials.

B. Perform required quality tests using a laboratory qualified by the Department.
   1. The Engineer may require additional samples for inspection and testing before approving use of the material.

C. Meet the requirements established by Utah Division of Oil, Gas, and Mining and other agencies having jurisdiction over the operation of commercial material source sites.

D. Strip and stockpile topsoil before removing any materials.

## 1.9 FINISHING AGGREGATE SOURCE SITES

A. Finish all public and private material source sites to the satisfaction of the Engineer.

B. Grade to drain without causing excessive erosion and without altering the natural drainage courses.

C. Locate aggregate waste sites in areas that are least visible from public view.
   1. Spread aggregate waste material to obtain a natural appearance.

D. Remove trash.
   1. Remove, bury, or distribute excess materials over the disturbed areas when excavation has been completed.

E. Perform required grading and reclamation as required under the agreement with the property owner when removal of material is complete and before spreading topsoil.
   1. Avoid vertical cuts and sharp corners.
   2. Grade side slopes to achieve a natural appearance.
   3. Abandon and obliterate haul roads.
   4. Obtain release from property owner indicating that all conditions of the agreement between the Contractor and property owner are satisfied.

F. Spread topsoil over the excavated area disturbed by construction operations including obliterated haul roads and seed all areas.
   1. Obtain required seed mix from Engineer.
   2. Seed and mulch according to Sections 02922 and 02911.

**PART 2 PRODUCTS Not Used**

**PART 3 EXECUTION Not Used**

END OF SECTION

**Supplemental Specification**
**2017 Standard Specification Book**

**SECTION 01554**

# TRAFFIC CONTROL

**Delete Section 01554 in its entirety and replace with the following:**

## PART 1 GENERAL

### 1.1 SECTION INCLUDES

A. Temporary traffic control requirements, signs, devices, and personnel necessary to control vehicular and pedestrian traffic flow in a safe and efficient manner in construction zones.

B. Work zone traffic control devices, arrow boards, and pilot cars.

### 1.2 RELATED SECTIONS

A. Section 00555: Prosecution and Progress

B. Section 02845: High Tension Cable Barrier

C. Section 02890: Retroreflective Sheeting

### 1.3 REFERENCES

A. AASHTO Roadside Design Guide, Current Edition

B. American National Standards Institute (ANSI)

C. Americans with Disabilities Act

D. ATSSA: American Traffic Safety Services Association
Quality Standards for Work Zone Traffic Control Devices

E. Department Flagger Training Handbook

F. Department Guidelines for Crash Cushions and Barrier End Treatments

G. International Safety Equipment Association (ISEA)

H. NCHRP Report 350: Recommended Procedures for the Safety Performance Evaluation of Highway Features

I. Utah Manual on Uniform Traffic Control Devices (Utah MUTCD)

J. MASH 2016: AASHTO Manual for Assessing Safety Hardware published 2016

## 1.4 DEFINITIONS

A. Peak Hours –Peak hours are 6:30 a.m. to 9:00 a.m. and 3:30 p.m. to 7:00 p.m., Monday through Friday unless otherwise defined by the Engineer or in the Special Provision for Section 00555.

B. TPAR – Temporary Pedestrian Access Route – A temporary detectable pedestrian route that is provided when existing routes are disrupted, closed or relocated and includes accessibility features present in the existing facility.

C. TPRS – Temporary Portable Rumble Strips – An array of three heavy rubber strips that create noise when they are run over and are used to alert drivers to the presence of road construction.

D. Traffic Slow Down – An isolated planned event where traffic on a highway is reduced in speed to provide a gap for work to proceed.
   1. Examples include the crossing of the highway with heavy equipment or the adjustment of traffic control devices.

## 1.5 SUBMITTALS

A. Traffic control plan for review before beginning work.
   1. Include at least the following:
      a. Traffic control measures for each phase of work in sufficient detail to provide for the safe and efficient movement of traffic, pedestrians, and bicycles during construction.
         1) Describe equipment, devices, and implementation instructions.
      b. Work elements to be accomplished in each phase.
      c. Details for each change to traffic control that is planned for the duration of the project.
      d. Expected duration of each traffic control configuration.
      e. Length of Need (LON) for temporary barriers.
      f. Taper lengths, lane shift widths, device spacing, and sign locations for temporary and existing signs.

g. Removal or masking of traffic control elements that conflict with temporary traffic control measures, such as existing traffic signs, traffic signals, and markings.
h. Worker parking, work vehicle access, and equipment access.
i. Location and hours of use for TPRS.
j. TPAR and devices for pedestrian access.

2. Provide supporting engineering calculations.
3. Provide the seal of a Professional Engineer licensed in the State of Utah on drawings and calculations.

B. Traffic Control Inspection forms weekly for information.
1. Submit on a day and time acceptable to the Engineer.

## 1.6 REQUIRED MEETING

A. At least the following must attend a meeting before beginning construction at the time and location determined by the Engineer:
1. Contractor's Traffic Control Designer
2. Contractor's Traffic Control Maintainer

## 1.7 DEVICE CRASHWORTHINESS

A. Crashworthiness requirements.
1. Devices manufactured on or before December 31, 2019 and that meet NCHRP 350 crashworthiness criteria may be used until December 31, 2022.
2. Devices manufactured after December 31, 2019 are required to meet MASH 2016 crashworthiness criteria.

B. Devices in the following FHWA device category are required to meet crashworthiness requirements:
1. Category 1 - cones, barrels and delineators
2. Category 2 - barricades and sign stands
3. Category 3 - barriers, crash cushions and truck mounted attenuators

C. Devices in the following FHWA device category are not required to meet crashworthiness requirements:
1. Category 4 - arrow boards and portable variable message signs

## 1.8 TRAFFIC CONTROL REQUIREMENTS

A. Meet the following requirements for traffic control and document them in the traffic control plan:

1. Meet the requirements in the TC series Standard Drawings, Utah MUTCD, and the Americans with Disabilities Act.
2. Provide for the safe and efficient movement of traffic.
   a. Address expected delay with the Project Public Involvement Team or the Region Communications Manager if the project does not have a Public Involvement Team.
3. Provide for the safe and efficient movement of pedestrians and cyclists when existing facilities are disrupted, closed or relocated by a work zone.
   a. Provide detectable temporary facilities that include accessibility features consistent with the features present in the existing pedestrian facility
4. Provide concrete barrier, crash cushions and attenuators including:
   a. Protection as required for hazard mitigation for workers. Refer to TC 3 Series Standard Drawings.
   b. Protect all hazards to motorists within the appropriate AASHTO clear zone including bridge parapets, barrier blunt ends, poles, and large equipment. Refer to the Department Guidelines for Crash Cushions and Barrier End Treatments for acceptable devices.
5. Provide temporary pavement markings and pavement marking removal.
6. Incorporate traffic signal timing and detection plans as determined by the Engineer.
7. Incorporate TPRS when there is a change in the width, alignment or number of lanes on freeways or interstates with 2 lanes in a single direction.

## 1.9 TRAFFIC CONTROL MAINTAINER

A. Provide a traffic control maintainer to install, maintain and remove temporary traffic control devices according to the authorized traffic control plan.

B. Qualifications:
   1. Certified by the Department or by the American Traffic Safety Services Association (ATSSA) as a Traffic Control Technician. A list of certifying agencies is available at http://www.udot.utah.gov/go/standardsreferences

C. Authority
   1. Obtains and uses labor, equipment, and materials necessary to maintain traffic control.
   2. Changes traffic control operations according to the authorized traffic control plan.

D. Responsibilities and Duties

1. Oversee traffic control operations and TPAR devices.
2. Be present and an active participant during the installation, maintenance, and removal of temporary traffic control devices.
3. Implement the authorized traffic control plan.
4. Remain available 24 hours a day, 7 days a week and can be on-site within 30 minutes of notification.
5. Correct deficiencies immediately upon notification from the Engineer.
6. Manage traffic control inspections.
    a. Document inspections on a form acceptable to the Engineer.
        1) Include at least the following:
            a) Assessment of device quality.
            b) Items in compliance with the authorized traffic control plan.
    b. A person with the Department or ATSSA Traffic Control Technician (TCT) certification performs the inspections and signs the documentation.
        1) Persons that have passed TCT certification but do not have the required experience may also perform the inspections and sign documentation.
    c. Inspect at least four times each day with at least one of the inspections conducted during nighttime hours when construction work is occurring:
        1) Before beginning of shift,
        2) At mid-shift,
        3) Half-hour after shift ends, and
        4) At the midpoint of the off-shift period.
    d. Conduct traffic control inspections twice each day when construction is not occurring, but traffic control is present.
        1) Once during daylight hours.
        2) Once during nighttime hours.
        3) At least 8 hours between inspections.
7. Coordinate project traffic control with emergency services and local law enforcement agencies.
8. Monitor traffic queue lengths and adjust advanced warning signs to provide adequate warning of the actual back of queue resulting from construction activities.
9. Adjust the TPRS as necessary to maintain proper alignment, spacing and location.
10. Adjust the TPAR devices as necessary to maintain a detectable route that is consistent with the accessibility present in the existing pedestrian facility.

## 1.10 PRICE ADJUSTMENTS

A. The Department reduces payment when traffic control is not in compliance with the authorized traffic control plan or when the Contractor fails to meet all requirements cited or referenced in this specification.
   1. The amount per day by which the Contractor's compensation will be reduced is calculated using the daily charge for Calendar Day in the Schedule of Liquidated Damages in Table of Section 00555 or the Contract lump sum bid price for Traffic Control divided by the number of contract days, whichever is greater.

# PART 2 PRODUCTS

## 2.1 PILOT CAR

A. Equip with a retroreflectorized sign.
   1. Refer to Section 02890.
   2. Utah MUTCD sign G20-4.

B. Equip with at least two rotating, oscillating, or strobe lights.
   1. Minimum 4 inch diameter/width and minimum 6 ft mounting height.
   2. Yellow color.

## 2.2 FLAGGER EQUIPMENT AND CLOTHING

A. Refer to the Department's Flagger Training Handbook.

B. Safety Clothing
   1. Flagger vest and hard hat – Orange, red-orange, or fluorescent version of these colors.
      a. Wear safety apparel meeting the requirements of ANSI/ISEA "American National Standard for High-Visibility Apparel and Headwear" or equivalent revisions and labeled as meeting the current ANSI/ISEA publication year, standard performance for Class 3 risk exposure.
      b. Hard hat with 10 square inches of white or strong yellow-green retroreflective tape placed around the base of the hard hat and visible to traffic from all directions.

## 2.3 TRAFFIC CONTROL SIGNING AND DEVICES

A. Signs
   1. Comply with Section 02890.
   2. Comply with TC Series Standard Drawings.

3. Comply with SN Series Standard Drawings when using post mounted signs.

B. Channelizing Devices
1. Comply with TC Series Standard Drawings.
2. Comply with Section 02890.

C. Precast Concrete Barrier
1. Comply with TC Series Standards Drawings.
2. Use an approved construction zone attenuator or permanent style end sections, as listed in Department Guidelines for Crash Cushions & Barrier End Treatments.
   a. Use a construction zone attenuator when approach ends of temporary precast barrier are within the maximum AASHTO clear zone.
      1) Use AASHTO Roadside Design Guide to determine proper clear zone distance requirements
      2) Refer to the CC Series Standard Drawings and manufacturer's recommendations to install crash cushions.

D. Use properly rated truck-mounted attenuator for the pre-construction posted speed limit.
1. Test Level 2 for speeds 45 mph or less.
2. Test Level 3 for speeds greater than 45 mph.
3. Do not use a truck-mounted attenuator (TMA) to protect blunt end for more than 72 hours.

E. Maintain cable barrier and anchor systems during construction.
1. Protect existing hazards when cable barrier and anchor systems are rendered inoperable by work.
   a. Address barrier length of need for the hazard.
2. Maintain the required tension in the cable barrier system when the cable is disconnected by installing anchor systems on each end of the disconnect.
   a. Do not cut cable.
3. Disconnect cable at cable splice or anchor system locations only.
4. Install approved terminal compatible with existing cable system. Refer to Section 02845.
   a. Tension cable to manufacturer's requirements.

## 2.4 ARROW BOARD

A. Comply with all standards as specified in the Utah MUTCD, Section 6F.61 Arrow Boards.

B. Refer to the TC Series Standard Drawings and the Utah MUTCD.

## 2.5 TEMPORARY PORTABLE RUMBLE STRIPS

A. Roadquake 2 Series
Temporary Portable Rumble Strip manufactured by:
Plastic Safety Systems
2444 Baldwin Road
Cleveland, OH 44104
(800) 662-6338

B. Space and locate TPRS as shown in TC Series Standard Drawings.

## 2.6 TEMPORARY WALKWAY AND RAMPS

A. Refer to TC Series Standard Drawings and the Utah MUTCD

# PART 3 EXECUTION

## 3.1 GENERAL

A. Implement and maintain traffic control according to the authorized traffic control plan.
1. Make changes immediately and notify the Engineer if traffic control changes that deviate from the authorized traffic control plan are required to make the work zone safe for workers or the traveling public.
2. Update the traffic control plan with the changes and resubmit for review.

B. Maintain traffic control as required by the authorized traffic control plan when traffic control is in place and work is not actively occurring, including overnight, weekends and holidays. Inspect according to this Section, Article 1.9.

C. The ATSSA publication Quality Standards for Work Zone Traffic Control Devices identifies different levels of device quality. Meet the acceptable level for all traffic control devices.
1. Wash or replace devices as needed to meet acceptable level.

D. Maintain traffic control devices during and after all snow plowing operations.
   1. Clear snow and ice away from the following:
      a. Traffic control devices to function as intended.
      b. TPAR devices to function as intended.
      c. Contractor provided TPAR features.

## 3.2 FLAGGING

A. Flaggers must have a current Utah flagging certificate and must present proof of certification upon request by the Department.
   1. Acceptable certifications. Refer to http://www.udot.utah.gov/go/standardsreferences for a list of acceptable courses taught by certified instructors.

## 3.3 TRAFFIC CONTROL SIGNING AND DEVICES

A. Use pre-construction posted speed limit to compute sign spacing, taper lengths, buffer zones, and construction clear zone.
   1. Use plastic drums or directional barricades for lane closure taper devices for speeds 50 mph and greater.
   2. Refer to the TC Series Standard Drawings for use of cones or tubular markers at night.

B. Use pre-construction posted speed limit during construction to compute the tangent spacing for channelizing devices.

C. Remove all traffic control devices from site of work that are no longer necessary for the authorized traffic control plan.
   1. Relocate traffic control devices from the roadway a distance twice that of the Work Clear Zone if they will be used within 24 hours of the daily work stoppage and are not required for immediate traffic control. Refer to the TC Series Standard Drawings.
      a. Obtain written permission from property owner before storing traffic control devices on private property.
   2. Crashworthy traffic control devices moved with a barrel mover or similar equipment may be relocated to the hard surface shoulder within 1 ft of the outer edge of shoulder if they will be used for traffic control within 48 hours of the daily work stoppage and are not required for immediate traffic control. Refer to TC Series Standard Drawings.
   3. Cover post mounted signs completely with an opaque and durable covering when the signs are not applicable.

## 3.4 ARROW BOARD

A. May substitute Type C units for Type B units. Refer to the TC Series Standard Drawings.

B. Do not substitute Type B units for Type C units.

C. Remove Arrow Board from the site of work when not needed for the control of traffic within a four-hour period.

## 3.5 TRAFFIC SIGNALS

A. Use uniformed police officer when construction activities are impacting an operating signalized intersection.

B. Use of flaggers at traffic signals permitted when the signals have been turned to red flash mode or are inoperable.
   1. Control each approach by separate flaggers.
      a. Flaggers can control only two lanes of approach traffic.
         1) Third lane control permitted when left or right turn bays present.

C. The Department will make all changes to traffic signal operations.

## 3.6 CONSTRUCTION ZONE SPEED LIMIT REQUIREMENTS

A. Obtain approval for regulatory and advisory speed reductions through the Engineer.
   1. Use speed reductions only during impacted times and areas.
   2. Restore pre-construction regulatory speed limit at locations where traffic is not being impacted by work activities.
   3 Refer to http://www.udot.utah.gov/go/standardsreferences for policy information.
   4. Refer to TC Series Standard Drawings.
   5. Use speed reduction only when construction activities impact traffic.
   6. Refer to SN Series Standard Drawings for post mounted sign requirements.

## 3.7 LIMITATION OF OPERATIONS

A. Traffic Slow Down
   1. Notify and obtain approval from the Department and law enforcement a minimum of 48 hours prior to slow down.
   2. Use a Highway Patrol Trooper, or other law enforcement officer, in a marked vehicle with overhead flashing lights to conduct the slow down.

3. Use the officer in the marked vehicle to slow down one or two lanes.
    a. Use, in any combination either, contractor-supplied vehicles equipped with overhead amber flashing lights or additional officers in marked vehicles at the rate of one vehicle per lane thereafter for all lanes of the highway to affect the traffic slow down.
4. Additional vehicles as described in this article may be used in the traffic slow down to supplement the law enforcement vehicle when required by the officer.
5. The duration of any traffic slow down is not to exceed five minutes or as approved by the Region Traffic Engineer and communicated through the Engineer.

## 3.8 TEMPORARY PORTABLE RUMBLE STRIPS (TPRS)

A. Clean road surface with broom or blower to remove all gravel, sand, dust, or other debris.

B. Assemble modular pieces into strips that match the width of the travel lane as closely as possible.
    1. Follow manufacturer's recommendations so that pieces are properly interlocked.

C. Place TPRS perpendicular to traffic and centered in lane.
    1. Follow manufacturer's recommendations and TC series standard drawings for installation and product orientation.
    2. Do not glue, nail, or otherwise affix TPRS to the road surface.

D. Place TPRS at the same time as other traffic control devices, prior to work taking place.
    1. Maintain the TPRS in proper condition, alignment, spacing, and location.
        a. Set TPRS perpendicular to the travel lane.
            1) Adjust TPRS when any one rumble strip becomes skewed by a distance of 3 ft or more. Skew distance is the distance parallel to direction of travel between the ends of the strip.
            2) Adjust the TPRS if the parallel distance between the individual rumble strips decreases by 5 ft or more.
            3) Temporary paint marks may be placed to give reference of original locations.
        b. Make adjustments to TPRS as often as necessary during working hours, but at least during each traffic control inspection.
            1) Adjustments to TPRS must be made within 30 minutes of discovery or notification of misalignment.
        c. Remove TPRS during non-working hours.

d. Implement a Traffic Slow Down if necessary to enter the travel lanes to deploy or reset TPRS.

E. Do not use TPRS during snow events, or at temperatures outside of the manufacturer's recommendations.

## 3.9 LANE CLOSURES

A. Notify the Engineer in advance of every lane closure.
   1. Provide notification:
      a. As soon as it is known that a lane closure is necessary to execute the work, but not less than 72 hours before the closure begins.
      b. As soon as practical when the schedule, location, or need for an upcoming lane closure arises or changes.
         1) Contact the Engineer immediately in person, by email, by phone call, or by text message.
   2. Include at least the following:
      a. The route,
      b. The beginning and ending mileposts or mile markers,
      c. Number of lanes to be closed,
      d. Direction of the closure,
      e. The date and time of the beginning of closure, and
      f. The date and time of the ending of the closure.

B. Coordinate lane closures with the Engineer (or designee) at least 72 hours before each closure to allow for Department entry into the UDOT Traffic Lane Closure system via the UDOT Traffic website

C. Provide real-time confirmation of every lane closure on the state routes listed in Table 1, and subsequent lane reopening, using the UDOT Lane Closure mobile application. (Use an iOS or Android smartphone; download instructions for the mobile application will be provided by UDOT.)
   1. Begin Lane Closure: Confirm lane closure details 30 to 45 minutes before placing the first traffic control device in the travel lane.
      a. Mobile application will generate a confirmation of the upcoming closure 45 minutes before the scheduled start time; the Contractor accepts the confirmation to activate the lane closure, or cancels or reschedules the lane closure as needed.
   2. End Lane Closure: Confirm lane reopening 30 to 45 minutes before removing the last traffic control device in the lane.

a. Mobile application will generate a confirmation 45 minutes before the scheduled expiration of lane closure; the Contractor accepts the confirmation to confirm the scheduled end time, or extends the closure as needed.

3. Call the TOC at (801) 887-3700 and provide information to activate, modify, or delete lane closure in the UDOT Traffic Lane Closure system in the event the mobile application is not working or is unavailable.
   a. Make this call 30 to 45 minutes before placing the first device in the travel lane, and 30 to 45 minutes before reopening the lane.

Table 1

| State Routes Requiring Real Time Lane Closure Confirmation |
|---|
| All interstates (I-15, I-70, I-80, I-84, I-215) |
| US-6 (East of I-15) |
| SR-30 (I-15 to Logan) |
| SR-36 (I-80 to Tooele) |
| SR-67 |
| SR-85 |
| SR-154 |
| SR-201 |
| SR-224 |
| SR-248 |
| US-40 |
| US-89 (Davis, Weber, Cache, Rich and Box Elder Counties) |
| US-91 (I-15 to Logan) |
| US-189 |
| US-191 (Moab to I-70) |

END OF SECTION

**Supplemental Specification**
**2017 Standard Specification Book**

**SECTION 02753M**

# FULL DEPTH SLAB REPLACEMENT FOR CONCRETE PAVEMENTS

**Delete 1.5, Paragraph A and replace with the following:**

A. Authorized Products List (APL) Compliance Form for Epoxy Resin Adhesive.

**Supplemental Specification**
**2017 Standard Specification Book**

**SECTION 03211**

# REINFORCING STEEL AND WELDED WIRE

**Delete Section 03211 in its entirety and replace with the following:**

## PART 1 GENERAL

### 1.1 SECTION INCLUDES

A. Reinforcing steel, steel welded wire reinforcement, dowelled anchors, T-headed bars, mechanical couplers, and grouted splice couplers.

B. Coating for reinforcing steel, steel welded wire reinforcement, and dowelled anchors.

### 1.2 RELATED SECTIONS Not Used

### 1.3 REFERENCES

A. AASHTO M 31: Deformed and Plain Carbon-Steel Bars for Concrete Reinforcement

B. AASHTO M 336: Steel Wire and Welded Wire, Plain and Deformed, for Concrete Reinforcement

C. AASHTO T 106: Compressive Strength of Hydraulic Cement Mortar (Using 50-mm or 2-in Cube Specimens)

D. ASTM A 108: Steel Bar, Carbon and Alloy, Cold-Finished

E. ASTM A 641: Zinc-Coated (Galvanized) Carbon Steel Wire

F. ASTM A 493: Stainless Steel Wire and Wire Rods for Cold Heading and Cold Forging

G. ASTM A 706: Low-Alloy Steel Deformed and Plain Bars for Concrete Reinforcement

H. ASTM A 767: Zinc-Coated (Galvanized) Steel Bars for Concrete Reinforcement

I. ASTM A 775: Epoxy-Coated Steel Reinforcing Bars

J. ASTM A 884: Epoxy-Coated Steel Wire and Welded Wire Reinforcement

K. ASTM A 934: Epoxy-Coated Prefabricated Steel Reinforcing Bars

L. ASTM A 955: Deformed and Plain Stainless-Steel Bars for Concrete Reinforcement

M. ASTM A 970: Headed Steel Bars for Concrete Reinforcement

N. ASTM A 1060: Zinc-Coated (Galvanized) Steel Welded Wire Reinforcement, Plain and Deformed, for Concrete

O. ASTM D 3963: Fabrication and Jobsite Handling of Epoxy-Coated Steel Reinforcing Bars

P. ASTM E 3121: Field Testing of Anchors in Concrete or Masonry

Q. ACI 355.4: Qualification of Post-Installed Adhesive Anchors in Concrete

R. American Welding Society (AWS) Standards

S. Concrete Reinforcing Steel Institute (CRSI) Manual of Standard Practice

## 1.4 DEFINITIONS Not Used

## 1.5 SUBMITTALS

A. Working Drawings
   1. Detailed shop drawings for review of the following:
      a. Field bending procedure if required. Provide the seal of a Professional Engineer (PE) or Professional Structural Engineer (SE) licensed in the State of Utah.
      b. Mechanical butt splice shop drawings when proposed details differ from the plans and specifications.
         1) Show number and location of mechanical butt splices.
         2) Provide two samples of mechanical butt splices and test to destruction in the presence of the Engineer.

B. Material Submittals
   1. Certificate of Compliance from the manufacturer.
   2. Continuous butt welded reinforcing hoops.
      a. Manufacturer's Quality Control (QC) procedures for the hoop fabrication for review. Include the following as a minimum:

1) The pre-production procedures for the qualification of material and equipment.
2) The methods and frequencies for performing QC procedures during production.
3) The calibration procedures and calibration frequency for all equipment.
4) The welding procedure specification (WPS) for resistance welding.
5) The method for identifying and tracking lots.

b. Two samples of welded splices for verification testing.

3. Grouted Splice Couplers
   a. Independent test report for review confirming coupler compliance for each supplied coupler size with the following:
      1) Develop 150 percent of the specified yield strength of the connected bar.
      2) Determine by testing the amount of time and grout compressive strength required to provide 100 percent of the specified minimum yield strength of the attached reinforcing bar. Use this value to determine when to release bracing.
      3) Use the same grout in the testing that will be used in the construction.
      4) Requirements for the grout including required strength gain to develop the specified minimum yield strength of the connected reinforcing bar.
4. Post-installed adhesive anchor material data sheet and recommended installation instructions for review

C. Continuous resistance butt welded hoop welder certifications
   1. Include welder test reports for each operator, process, and position as required by AWS specifications.
   2. Include a letter that states the certified welders have been using the process without an interruption of more than six months since being certified.

D. Grouted splice coupler quality assurance qualifications for information
   1. Grouted splice coupler installer qualifications
      a. Provide names and state experience or training of personnel responsible for installation of the grouted splice couplers.
         1) Include a certificate or statement of training with the names of the trained individuals signed by the manufacturer's representative
   2. Grouted splice coupler manufacturer's technical support representative qualifications. Include at least the following:
      a. Company name

b. Name and phone number of the technical support representative
c. List of projects using the submitted grouted splice coupler with at least two years of satisfactory performance. List the following for each project:
    1) Project name
    2) Bridge location (state routes and bridge identifiers)
    3) Scope of work
    4) Products used

## 1.6 QUALITY ASSURANCE

A. Grouted splice coupler manufacturer's technical support representative
    1. Provide a technical support representative onsite during preparation and grouting of the grouted splice coupler

B. Grouted splice coupler installers
    1. Installers must be familiar with installation and grouting of splice couplers and that have completed at least two successful projects in the last two years.
        a. Train new personnel within three months of installation by a manufacturer's technical representative as an acceptable substitution for the experience.

# PART 2 PRODUCTS

## 2.1 REINFORCING STEEL

A. Deformed or plain carbon steel bars
    1. Refer to AASHTO M 31, Grade 60.

B. Deformed or plain low-alloy steel bars
    1. Refer to ASTM A 706, Grade 60.

C. Deformed or plain stainless steel bars
    1. Refer to ASTM A 955, Type XM-28.

## 2.2 WIRE AND WIRE REINFORCEMENT

A. Refer to AASHTO M 336 for cold drawn steel wire.

B. Refer to AASHTO M 366 for steel welded wire reinforcement.

## 2.3 T-HEADED BARS

A. Use T-headed bars consisting of deformed rebar with steel plates friction welded to one end of the rebar. Friction welding conforms to the authorized quality control manual and AWS C6.2, Friction Welding of Metals.
   1. Headed Bars that meet the requirements of ASTM A 970 may be substituted.

B. Use deformed rebar according to ASTM A 706, Grade 60.

C. Cut plate heads for T-headed bars from flats of hot-rolled steel according to ASTM A 108.

## 2.4 COATINGS

A. Epoxy Coating
   1. Reinforcing steel
      a. Refer to ASTM A 775 or ASTM A 934.
   2. Wire and wire reinforcement
      b. Refer to ASTM A 884.

B. Galvanized Coating
   1. Reinforcing steel
      a. Refer to ASTM A 767.
   2. Wire and wire reinforcement.
      a. Coat welded wire after fabrication.
      b. Refer to ASTM A 1060.

C. Coat bars as described.
   1. Maintain epoxy coating thickness between 8 and 12 mils.
   2. Maintain galvanized coating thickness according to ASTM A 767.
   3. Coat bars after bending unless the fabricator can show that satisfactory results can be obtained by coating before bending.
   4. Do not use bent bars with visible cracks or damage in the coating.

D. Coating Repair Materials
   1. Meet requirements of ASTM D 3963 for repair of epoxy coatings.
   2. Use Inorganic Zinc-Rich Paint with 65 to 69 percent metallic zinc by weight, or greater than 92 percent metallic zinc by weight in dry film for repair of galvanized coatings.
      a. Do not use spray applied galvanized coating repair materials.

## 2.5 DOWELLED ANCHORS

A. Post-Installed Adhesive Anchors
   1. Use adhesive satisfying the assessment criteria of ACI 355.4 including qualifications for seismic loading.

B. Use reinforcing steel, bolts, and anchors as shown.

## 2.6 BAR SUPPORTS AND TIE WIRE

A. Provide epoxy coated, galvanized, plastic coated, or plastic bar supports and tie wire that meet the following requirements when not in contact with stainless steel:
   1. Meet the requirements of Table 1.
   2. Remove contaminants that affect the adhesion of the coating to the wire.
   3. Use an electrostatic spray method, fluidized bed, or flocking to apply an epoxy coating.
   4. Apply plastic coating by spraying, dipping, or using as a powder.
   5. Provide galvanized coating according to ASTM A 641
   6. Use patching material according to the manufacturer's recommendation to repair damaged coating.
      a. Use patching material that is compatible with the coating and that is inert in concrete.
      b. Do not repair hanger marks on the coated bar supports that result from the coating application process. Hanger marks are not considered damaged coating.
   7. Use 16 gauge coated tie wire.
      a. Do not use galvanized tie wire with epoxy coated reinforcing steel.

B. Precast concrete block bar supports that conform to the following:
   1. Provide minimum 28-day compressive strength of 2,500 psi.
   2. Use three inch thick supports with sides ranging from 4 to 6 inches with a minimum ground contact area of 24 $in^2$.

C. Provide bar supports and tie wires for use with stainless steel bars that meet the following:
   1. Meet the requirements of Table 1.
   2. Provide bar supports that are plastic or stainless steel conforming to the requirements of ASTM A 493, Type 316.
   3. Provide tie wires that are plastic or stainless steel conforming to the requirements of ASTM A 493, Type 316, annealed.

## 2.7 MECHANICAL SPLICE COUPLER

A. Elastic capacity couplers:
   1. Use reinforcing steel mechanical splice couplers capable of developing in tension 125 percent of the specified yield strength of the reinforcing steel bar.

B. Ultimate strength couplers:
   1. Use where shown.
   2. For Grade 60 reinforcing steel bars
      a. Use reinforcing steel mechanical splice couplers capable of transferring at least 95 ksi in tension between the spliced reinforcing steel bars.

C. Use coated couplers with the same type of coating as the reinforcing steel being spliced.

D. Use stainless steel splice coupler with stainless steel reinforcement.

## 2.8 GROUTED SPLICE COUPLER

A. Use grouted splice couplers to join precast elements as shown.
   1. Provide couplers that use cementitious grout placed inside a steel casting. Grout is part of the proprietary system and is provided by the coupler manufacturer.

B. Use one of the following grouted splice coupler manufacturers according to the requirements of this Section. Refer to http://www.udot.utah.gov/go/standardsreferences for information on the following providers:
   1. NMB Splice Sleeve
      Splice Sleeve North America, Inc.
      38777 West Six Mile Road, Suite 205
      Livonia, MI 48152
   2. Sleeve-Lock Grout Sleeve System
      Dayton Superior Corporation
      1125 Byers Road
      Miamisburg, OH 45342
   3. Lenton Interlok
      Pantair USA
      34600 Solon Road
      Solon, OH 44139

C. Use grouted splice couplers that provide 150 percent of the specified yield strength of the connected bar.

D. Use grout supplied by the manufacturer of the coupler and that matches the certified test report for the coupler.

E. Use the same coating system as used for the reinforcing steel.
   1. Use grouted splice couplers that join the reinforcing steel without removal of the epoxy coating on the spliced bar when using epoxy coated reinforcing steel.

## 2.9 CONTINUOUS RESISTANCE BUTT WELDED HOOPS

A. Weld only reinforcing steel conforming to ASTM A 706 as shown.
   1. Use resistance butt welded splices for continuous hoops.

B. Refer to AWS D1.4: Structural Welding Code - Reinforcing Steel.

C. Change welding procedures to reflect chemical composition of the steel.
   1. Welders must have correct mill test report (chemical analysis) from the heat in which the steel was made.

D. Apply coating after all welding has been completed.

## 2.10 FABRICATION

A. Use Department Prequalified Suppliers for all reinforcing steel products.

B. Bend reinforcement to the shapes as shown. Refer to CRSI Manual of Standard Practice.

C. Do not heat the bars during the bending operations.

# PART 3 EXECUTION

## 3.1 DELIVERY, STORAGE, AND HANDLING

A. Protect the bars and the coating during handling and storage.
   1. Use systems with padded contact areas when handling epoxy coated bars.
   2. Pad all bundling bands for epoxy coated bars.
   3. Lift all bundles with strong-back, multiple supports, or a platform bridge.
   4. Do not drop or drag bars.

B. Store bars above the ground surface on wooden or padded supports.
   1. Place timbers between bundles when stacking is necessary.
   2. Space the supports close enough to prevent sags in the bundles.

C. Cover epoxy coated reinforcing steel with an opaque covering upon delivery to the project site.
   1. Protect epoxy coated reinforcing steel that has been partially embedded in concrete or placed in formwork.
      a. Cover with an opaque covering before 30 days exposure to sunlight.
   2. Place the opaque coverings to provide air circulation and prevent condensation on the reinforcing steel.

D. Ship, handle, and store stainless reinforcing steel so it does not come in contact with carbon steel.
   1. Cover stainless reinforcing steel with tarps during outdoor storage.
   2. Separate bundles of stainless reinforcing steel from other types of reinforcing steel with wooden spacers.
   3. Store stainless reinforcing steel on wooden supports off the ground or floor.

## 3.2 COATING REPAIR

A. General
   1. Follow product manufacturer recommendations for repairs.
   2. Clean and dry repair area.
   3. Protect nearby surfaces from overspray.
   4. Allow at least 45 minutes of drying time before encasing repaired reinforcing bar in concrete.

B. Epoxy Coatings
   1. Do not apply repair materials at temperatures below 50 degrees F except where application instructions explicitly state lower temperatures are allowed.
   2. Apply multiple coats when using spray applied coating repair materials.
      a. Allow a few minutes between coats to avoid drips and runs.

C. Limits for Repair
   1. Repair minor damage to coatings and cut reinforcing steel bar ends with specified coating repair materials before placement.
      a. Refer to this Section, Article 3.2.
   2. Do not use bars with moderate damage to coatings within any one foot length of the reinforcing steel bar or as determined by the Engineer.
      a. Cut ends are not considered damage for this purpose.
   3. Replace installed reinforcing steel bars that have significant damage to coatings within any one foot length of the reinforcing steel bar or as determined by the Engineer.

## 3.3 PLACEMENT

A. Maintain a clean surface keeping all reinforcement free from loose mill scale, loose or thick rust, dirt, paint, oil, or grease.

B. Place all reinforcement in designated position and securely hold in position while placing and vibrating concrete.

1. Placing Tolerances
   - a. Decks or members 10 inches or less in thickness
     - 1) Cover: -⅛ inch, + ¼ inch.
     - 2) Longitudinal spacing for individual bars: ±1 inch.
       - a) Clear spacing between bars: not less than the greater of 1½ inches, 1½ bar diameters, and 1½ times the maximum aggregate size.
     - 3) Average spacing for 10 bars: +$^{1}/_{16}$ inch.
       - a) Do not use tolerance to decrease number of bars or increase bar spacing.
   - b. Members 10 to 20 inches in thickness
     - 1) Cover: ±¼ inch.
     - 2) Longitudinal spacing for individual bars, stirrups, or ties: ±1 inch.
       - a) Clear spacing between bars: not less than the greater of 1½ inches, 1½ bar diameters, and 1½ times the maximum aggregate size.
     - 3) Average spacing for 10 bars: +$^{1}/_{16}$ inch.
       - a) Do not use tolerance to decrease number of bars or increase bar spacing.
   - c. Members greater than 20 inches in thickness
     - 1) Cover: -¼ inch, + ½ inch.
     - 2) Spacing for stirrups or ties: ±3 inches.
       - a) Clear spacing between bars: not less than the greater of 1½ inches, 1½ bar diameters, and 1½ times the maximum aggregate size.
     - 3) Longitudinal bar spacing ±3 inches.
       - a) Clear spacing between bars: not less than the greater of 1½ inches, 1½ bar diameters, and 1½ times the maximum aggregate size.
     - 4) Average spacing for 20 bars: +¼ inch.
       - a) Do not use tolerance to decrease number of bars or increase bar spacing.
   - d. Length of bar laps -1 inch
   - e. Embedment length -1 inch

C. Tie bars together with ties at intersections except when spacing is less than 9 inches in each direction, in which case tie at alternate intersections.
   1. Tie bundled bars together at not more than 6 ft centers.

D. Maintain the required distance from the forms and between layers of reinforcement with prefabricated chairs, ties, hangers, or other devices.

E. Do not tack weld reinforcing bars in place.

F. Overlap at least one panel of welded wire reinforcement sheets to each other and fasten at the ends and edges.

G. Support reinforcing steel for concrete “T” beams, pier caps, approach slabs, and deck slabs on metal chairs or bar supports according to this Section, Article 2.6.

H. Space chairs for supporting the top steel and bolsters for supporting the bottom steel not more than 4 ft on center of the bar in each direction.

I. Tie deck steel to beams or forms at regular intervals of not more than 5 ft on center along the beams to prevent steel movement during concrete placement.

J. Support reinforcing steel for slabs on grade on metal chairs attached to a sand plate or use precast concrete block supports according to this Section, Article 2.6.
   1. Precast concrete block supports may only be used to support the bottom mat of bars.
      a. Do not use blocks that are cracked or damaged.

K. Do not place concrete until the Engineer has verified the reinforcement placement and fastening.

L. Place stainless steel reinforcement so that it does not come in contact with carbon steel.
   1. Do not tie stainless steel to uncoated or coated carbon steel reinforcement, galvanized attachments, or galvanized conduits.
      a. Maintain at least 1 inch clearance between the metals using nylon or polyethylene spacers when stainless steel reinforcing or dowels must be near coated or uncoated reinforcing, or galvanized metals.
         1) Bind using nylon cable ties.
         2) Maintain at least 1 inch clearance unless insufficient space exists.

a) Either bar may be sleeved with a $^{1}/_{8}$ inch minimum thick insulator material, such as polyethylene, nylon or rubber tube, extending at least 1 inch in either direction past the point of closest contact between the two dissimilar bars.

b) Sleeves are not allowed for bars that run parallel to each other.

## 3.4 FIELD CUTTING

A. Saw or shear coated bars that are specified to be cut in the field.
   1. Do not flame cut.

B. Repair the coating at the sawed or sheared end using the specified patching or repair material.

## 3.5 SPLICING

A. Furnish all reinforcing steel in the lengths shown.

B. Do not splice bars except where shown.

C. Stagger splices as far as possible.

D. Place and tie lapped splices to maintain the clearance to the surface of the concrete shown.

E. Do not allow lap splices in vertical column reinforcing bars unless shown.

F. Do not lap splice No. 14 and No. 18 bars.
   1. Use mechanical splice couplers.

G. Use mechanical splice couplers when shown.
   1. Follow the manufacturer's published recommendations for equipment and splicing procedures.

## 3.6 FIELD BENDING

A. Do not field bend reinforcing steel unless shown.

B. Follow the authorized field bending procedures.

C. Use methods that do not damage coatings.

D. Do not heat the bars during the bending operations.

E. Do not bend bars partially embedded in concrete except as shown or pre-approved by the Engineer.
   1. Do not field straighten or re-bend fabricated bent bars.

## 3.7 INSTALLATION OF DOWELLED ANCHORS

A. Use dowelled anchors according to the following:
   1. Drill, brush, and clean all holes and install all doweled anchors according to manufacturer's published recommendations, applicable specifications, and as shown.
   2. Do not install dowelled anchors until the holes are verified by the Engineer.
   3. Test post-installed adhesive anchors when shown, and as follows:
      a. Allow anchor adhesives to cure 48 hours before testing.
      b. Tension test according to ASTM E 3121.
         1) Test in the confined condition.
         2) Tension anchors to 90 percent of the anchor yield strength
         3) Hold tension at the specified load for at least 60 seconds.

## 3.8 CONNECTIONS USING GROUTED SPLICE COUPLERS

A. Use grouted splice coupler installers according to the submitted grouted splice coupler installer qualifications.

B Remove and clean all debris from the joints before grout application.

C. Keep bonding surfaces free from laitance, dirt, dust, paint, grease, oil, or any contaminants other than water.

D. Embed rebar anchor dowels to the minimum coupler embedment required by the manufacturer.

E. Saturate Surface Dry (SSD) all concrete surfaces in the joint before connecting the elements.

F. Use shims to verify that the reinforcing extensions are within the manufacturers recommended tolerance.

G. Maintain a minimum grout and sleeve temperature of 50 degrees F until the temporary bracing is removed.

H. Mix structural grout and coupler grout just before use according to the manufacturer's instructions.

I. Follow the manufacturer’s recommendations for coupler installation and grouting.

J. Monitor the grouting operation to verify that all sleeves have been filled.

K. Protect sleeves from vibration, shock, or other excessive movement until temporary bracing is removed.

L. Conform to the following when installing couplers above a horizontal joint:
   1. Determine the thickness of shims to provide the specified elevation within tolerance.
   2. Follow non-shrink grout manufacturer’s recommendations for mixing, joint surface preparation, and application.
   3. Place non-shrink grout on the interface between the two elements being joined before setting the element.
      a. Crown the thickness of the grout toward the center of the joint so that the grout can be displaced outward as the element is lowered onto the joint.
      b. Prevent the grout from entering the coupler above elements by using grout dams or seals.
   4. Set the element in place.
      a. Engage all couplers in the joint.
      b. Allow the grout to seep out of the joint.
   5. Trowel off excess grout to form a neat joint once the element is set, plumbed, and aligned.
      a. Pack grout into any voids around the joint perimeter.
   6. Flush out the coupler with clean potable water.
   7. Mix the special coupler grout according to the manufacturer’s recommendations for methods and proportions of mix and water.
   8. Make four sets of three 2 inch cube specimens for testing.
      a. Cure the specimens according to AASHTO T 106.
      b. Test one set of cubes for compressive strength to determine when to release bracing. Refer to this Section, Article 1.5 paragraph B4a2.
      c. Test one set of cubes at 28 days for acceptance.
      d. Store extra sets for longer term testing if necessary.
      e. Use a Department qualified laboratory to take the samples and perform the tests.
   9. Pump the coupler grout into the coupler that is cast into the element.
      a. Start from the lower port.
      b. Pump until the grout is flowing freely from the upper port.

c. Cap the upper port first and then remove the nozzle to cap the lower port.

10. Cure the joint according to the grout manufacturer's recommendations.

M. Conform to the following when installing couplers below a horizontal joint:

1. Determine shim thickness to provide the specified elevation within tolerance.
2. Before setting the element:
   a. Mix the coupler grout paying strict attention to the manufacturer's recommendations for methods and proportions of mix and water.
   b. Clean debris from the interior using compressed air.
      1) Remove any rain water using a vacuum that can remove water from the confined space in the coupler.
   c. Place the coupler grout into the coupler by pouring or pumping.
   d. Place grout on the interface between the two elements being joined.
      1) Crown the thickness of the grout toward the center of the joint so that the grout can be displaced outward as the element is lowered onto the joint.
3. Trowel off excess grout to form a neat joint once the element is set, plumbed, and aligned.
   a. Pack grout into any voids around the joint perimeter.

N. Conform to the following when installing couplers in vertical joints (horizontal bar/coupler connection):

1. Establish a method to provide the specified elevations, alignment, and spacing within tolerance.
2. Use washers or seals to prevent mixing the joint grout and the coupler grout.
3. Apply epoxy adhesive to the interface between the two elements being joined.
4. Set the element in place.
   a. Engage all couplers in the joint.
5. Flush out the couplers with clean potable water once the element is set, plumbed, and aligned.
6. Mix the coupler grout paying strict attention to the manufacturer's recommendations for methods and proportions of mix and water.

7. Pump the coupler grout into the coupler that is cast into the element.
    a. Start from the port closest to the joint.
    b. Pump until the grout is flowing freely from the other port.
    c. Cap the port farthest from the joint first and then remove the nozzle to cap the other port.
8. Form the edges of the joint and place grout into the joint.
9. Cure the joint according to the grout manufacturer's recommendations.

## 3.9 FIELD QUALITY CONTROL

A. Inspect coated bars for damage to the coating after the bars are in place and immediately before concrete placement.

Table 1

| Bar Supports | | | | | | | |
|---|---|---|---|---|---|---|---|
| **Types and Sizes** | | | | **Minimum Wire Sizes[2] and Geometry** | | | |
| **Symbol** | **Bar Support Illustration** | **Type of Support** | **Standard Sizes** | **Nominal Height** | **Carbon Steel** | | **Geometry** |
| | | | | | **Top** | **Legs** | |
| SB[1] | 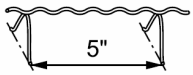  | Slab Bolster | ¾, 1, 1½, and 2 inch heights in 5 ft and 10 ft lengths | All | 4 ga. Corrugated | 6 ga. | Legs Spaced 5 inches on Center, Vertical Corrugations Spaced 1 inch on Center (See Note 3) |
| BB[1] | | Beam Bolster | 1, 1½, and 2 inch; over 2 inch to 5 inch heights in increments of ¼ inch lengths of 5 ft. | Up to 1½ inch incl. | 7 ga. | 7 ga. | Legs Spaced 2½inches on Center (See Note 3) |
| | | | | Over 1½ inch to 2 inches incl. | 7 ga. | 7 ga. | |
| | | | | Over 2 inches to 3½ inches incl. | 4 ga. | 4 ga. | |
| | | | | Over 3½ inch | 4 ga. | 4 ga. | |
| BC | | Individual Bar Chair | ¾, 1, 1½, and 1¾ inch heights | All | ----- | 7 ga. | (See Note 3) |
| JC | | Joist Chair | 4, 5, and 6 inch widths and ¾, 1, and 1½ inch heights | All | ----- | 6 ga. | (See Note 3) |
| HC or HPC* | * SAND PLATE NEED NOT BE COATED | Individual High Chair | 2 inch to 15 inch heights in increments of ¼ inch. | 2 inches to 3½ inches incl. | ----- | 4 ga. | Legs at 20 degree or less with vertical. When height exceeds 12 inches, legs are reinforced with welded crosswires or encircling wires (See Note 4) |
| | | | | Over 3½ inches to 5 inches incl. | ----- | 4 ga. | |
| | | | | Over 5 inches to 9 inches incl. | ----- | 2 ga. | |
| | | | | Over 9 inches to 15 inches incl. | ----- | 0 ga. | |
| CHC | 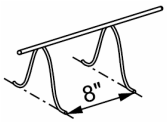  | Continuous High Chair | Same as HC in 5 ft and 10 ft lengths | 2 inches to 3½ inches incl. | 2 ga. | 4 ga. | Legs at 20 degree or less with vertical. All legs 8¼ inches on center maximum, with leg within 4 inches of end of chair, and spread between legs not less than 50 percent of nominal height. (See Note 5) |
| | | | | Over 3½ inches to 5 inches incl. | 2 ga. | 4 ga. | |
| | | | | Over 5 inches to 9 inches incl. | 2 ga. | 2 ga. | |
| | | | | Over 9 inches to 15 inches incl. | 2 ga. | 0 ga. | |

Notes and Bar Supports Table, see next page.

Notes:

1. Provide top wire on continuous supports, not otherwise designated as corrugated, which may be straight or corrugated at the option of the manufacturer.

2. Provide minimum wire sizes that are American steel and wire gauges.

3. Provide adequate stability against overturning. The leg spread measured between points of support on the minor axis must be at least 70 percent of the nominal height.

4. Provide adequate stability against overturning. The leg spread measured between points of support on the minor axis must be at least 55 percent of the nominal height.

5. Provide adequate stability against overturning and adequate load capacity. The leg spread measured between points of support on the minor axis must not exceed the minimum and maximum percentages of the nominal height as shown.

Table 2

| **Support Axis** | | |
|---|---|---|
| **Nominal Height (inches)** | **Distance Between Supports as a Percent of Nominal Height** | |
| | **Minimum** | **Maximum** |
| Under 4 | 70 | No Limit |
| 4 | 70 | 95 |
| 6 | 65 | 90 |
| 8 | 60 | 85 |
| 10 | 55 | 80 |
| 12 | 50 | 75 |
| Over 12 | 50 | 75 |

END OF SECTION

**Supplemental Specification**
**2017 Standard Specification Book**

**SECTION 13556M**

# CLOSED CIRCUIT TELEVISION (CCTV) ASSEMBLY

**Delete Article 1.1, Paragraph B and replace with the following:**

B. Installation of State furnished non-lowering and camera lowering CCTV poles and AXIS CCTV assembly.

**Delete Article 2.1 and replace with the following:**

## 2.1 STATE FURNISHED EQUIPMENT

A. CCTV Pole or Luminaire Pole.
   1. Non-Lowering CCTV pole - 45 ft or 60 ft steel pole with anchor bolts
   2. Camera Lowering Poles – 45 ft, 60 ft, or 75 ft steel pole with anchor bolts
   3. Luminaire Mounted CCTV- luminaire vertical extensions on signal poles

B. CCTV Assembly
   1. Positioner camera assembly- includes the integrated camera and pan tilt unit, base, push-pull RJ-45 connector kit and POE++ (Power supply and AC cord)
   2. Pole mounted camera assembly - pole adapter plate AXIS T94N01G and wall mounted arm AXIS T94J01A
   3. Top Pole Mount - Pelco EPP to AXIS Q6215-LE adapter bracket
   4. Refer to AT Series Standard Drawings to identify the required component parts, installation details, and wiring diagrams.

C. Camera Lowering System
   1. Camera lowering assembly including suspension contact unit, pole adapter for attachment to a pole top tenon, pole top junction box, steel cable, pulleys, support arm, camera connection junction box, portable camera lowering tool, and Pelco EPP to AXIS Q6215-LE adapter bracket.
   2. Amphenol LTW RJ45 D size double screw connector (see AT Series Standard Drawings)

D. Data surge suppressor

E. Pole mounted 336 cabinet or ground mounted 334 cabinet

**Delete Article 2.4, Paragraph E**

**Add Article 2.7.**

**2.7 NON ARMORED CAT 6 SHIELDED CABLE AND CONNECTORS**

A. Provide Non Armored Cat 6 Shielded Cable.
   1. Use Omni Cable J662304-05 23/4PR CMR Cat 6 Shielded Blue Riser, Superior Essex Part No. 04-001-64, Paige Datacom Solutions GameChanger Shielded OSP Cable Part No. 258340804 or approved equivalent.

B. Provide shielded RJ45 connectors for Cat 6 cable

**Delete Article 3.2, Paragraph C and D and replace with the following:**

C. Clear equipment exterior of all loose rust and mill scale, dirt, oil, grease, and other foreign substances.

**Delete Article 3.7 and replace with the following:**

A. Install CCTV cables in conduit and poles.
   1. Run cables continuously and without splices between camera and cabinet.
   2. Do not exceed 300 ft for length of Cat 6 cable unless approved by the Engineer.
   3. Use cable cord grip when and where exposed cables enter the pole.

B. Keep cable ends sealed at all times during installation until connectors are installed using an approved cable end cap.

C. Install cable without violating the minimum bending radius and the maximum pulling tension recommended by the manufacturer's specifications at any time.

D. Provide 6 ft of CCTV cable slack placed in the junction box adjacent to the cabinet. Refer to Section 13555.

E. Make all camera cable connections between the CCTV camera, surge suppression device, and communications equipment, as required to provide a fully operational CCTV system.

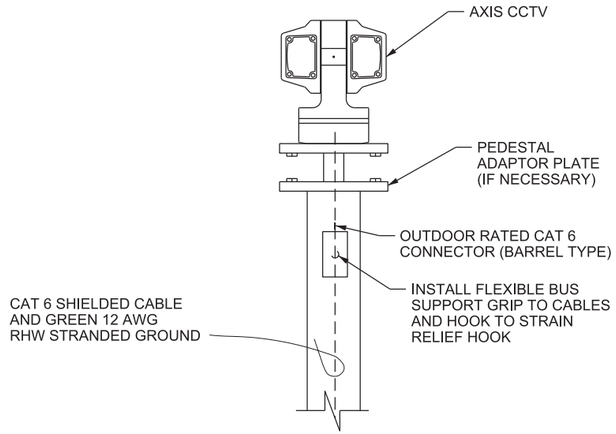


## A MOUNTING DETAIL
## PEDESTAL MOUNTED AXIS CCTV

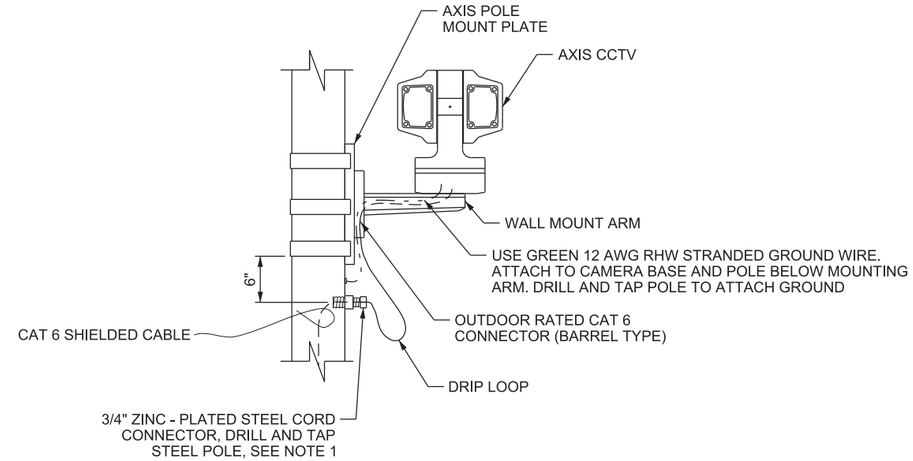


## B MOUNTING DETAIL
## POLE MOUNTED AXIS CCTV

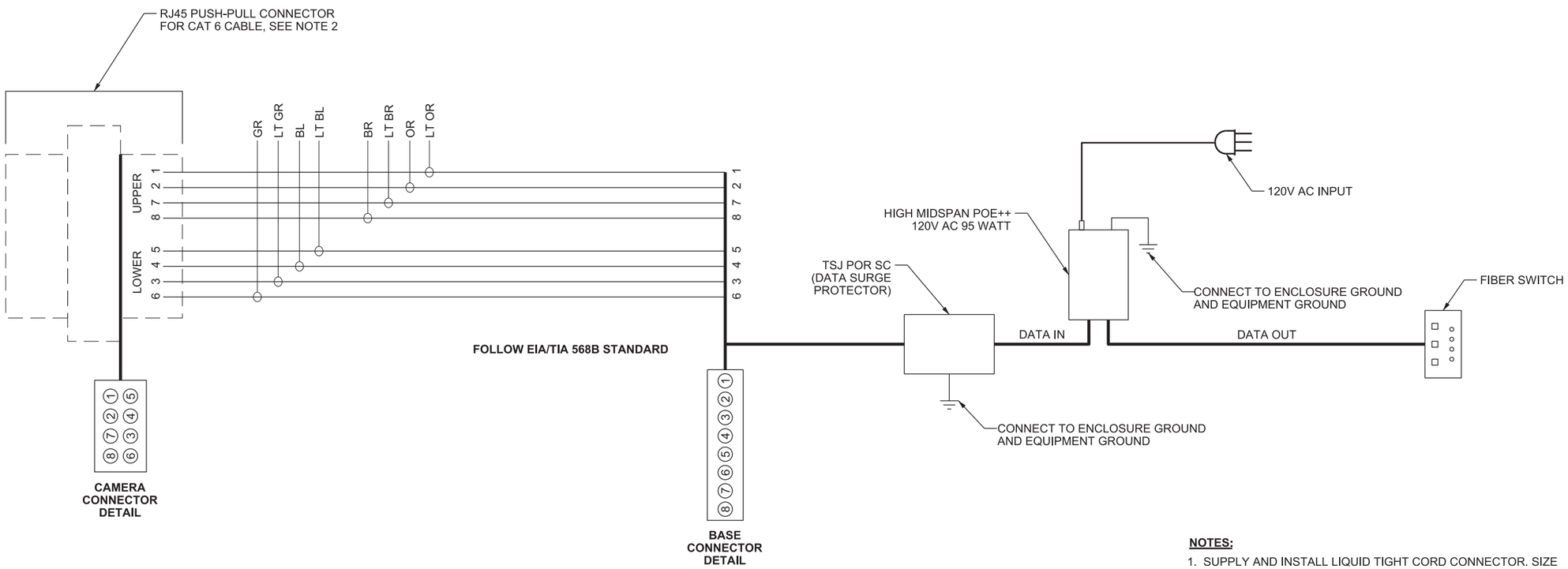


## C WIRING DIAGRAM
## AXIS CAMERA

**NOTES:**

1. SUPPLY AND INSTALL LIQUID TIGHT CORD CONNECTOR. SIZE APPROPRIATELY FOR WIRE DIAMETER.
2. USE VENDOR SUPPLIED RJ45 PUSH-PULL CONNECTOR FOR CAMERA TERMINATION.
3. TIE CABLE TO GROUND THROUGH CAT 6 SHIELDED CONNECTOR.

SUPPLEMENTAL DRAWING

| NO. | DATE | APPR. | REMARKS |
|---|---|---|---|
| 1 | 8/29/19 | MMA | REPLACED ENTIRE DRAWING WITH NEW CAMERA TYPE |

**UTAH DEPARTMENT OF TRANSPORTATION**
STANDARD DRAWINGS FOR ROAD AND BRIDGE CONSTRUCTION
SALT LAKE CITY, UTAH

RECOMMENDED FOR APPROVAL — AUG. 29, 2019 (DATE)
CHAIRMAN STANDARDS COMMITTEE APPROVED — AUG. 29, 2019 (DATE)
DEPUTY DIRECTOR

STANDARD DRAWING TITLE
AXIS CCTV MOUNTING DETAIL AND WIRING DIAGRAM

STD. DWG. NO.
AT 10A

04-SEP-2019 DGN File:L:\Standard_Drawings\Imperial\2017 Approved_Supplemental_Issues\Suppl0 Approved August - 2019\Backup\AT10A.dgn

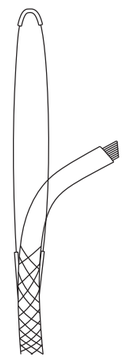

## A DETAIL
## FLEXIBLE BUS SUPPORT GRIP

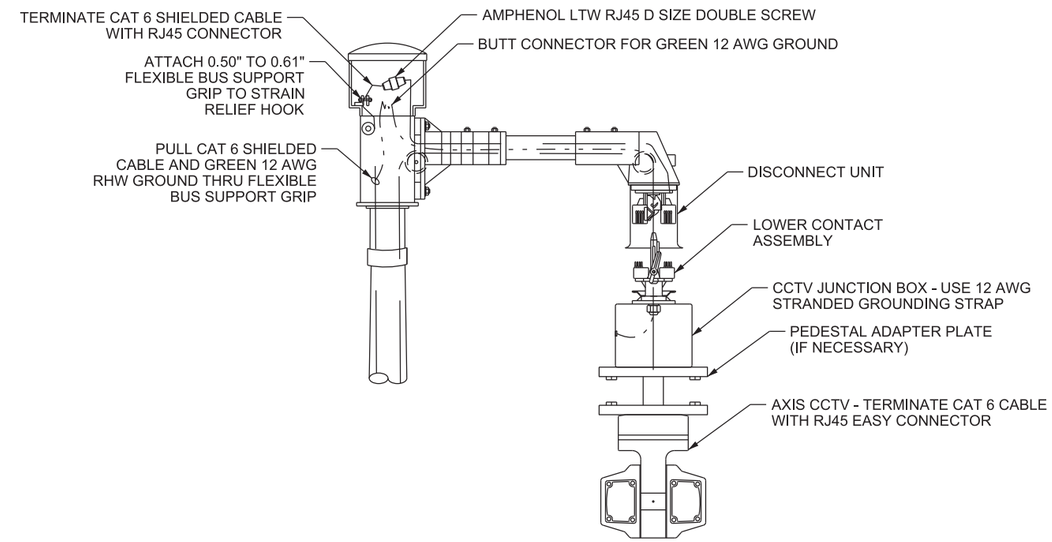


## B MOUNTING DETAIL
## CAMERA LOWERING SYSTEM (AXIS)

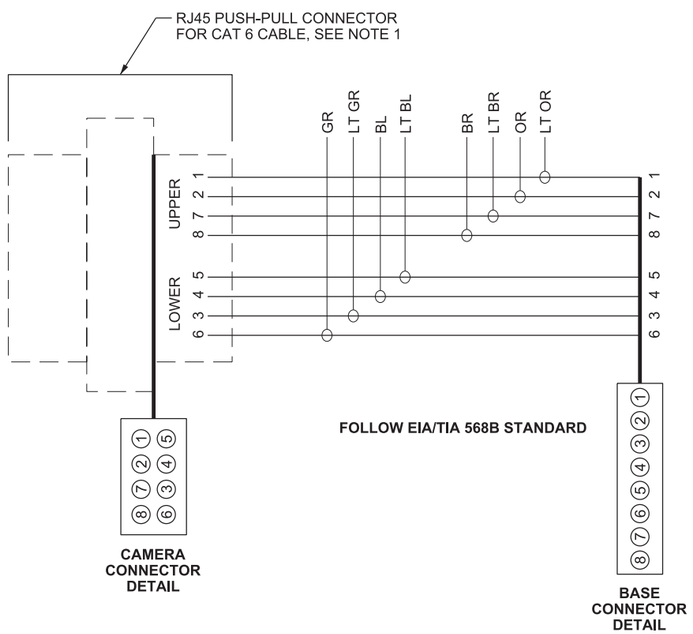


## C PIN DETAIL
## RJ45 CONNECTORS

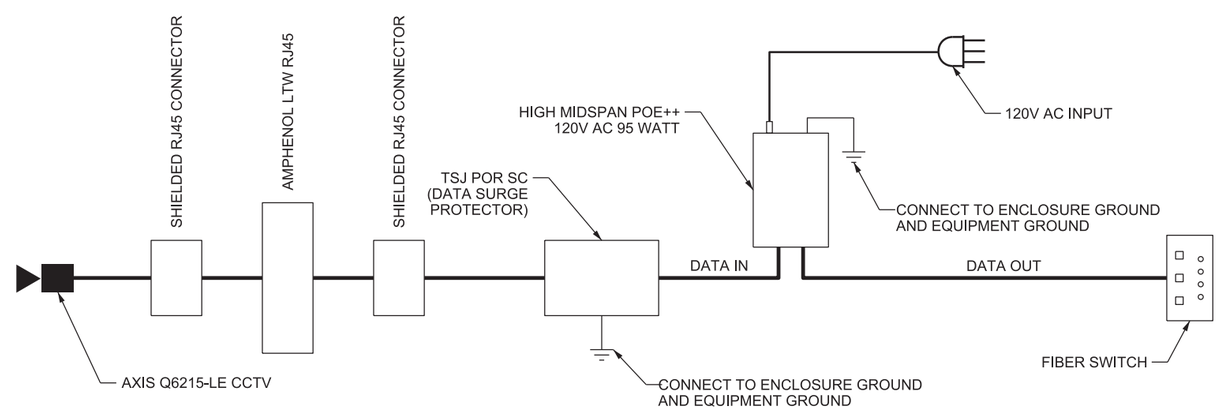


## D WIRING DIAGRAM
## AXIS CAMERA

**NOTE:**

1. USE VENDOR SUPPLIED RJ45 PUSH-PULL CONNECTOR FOR CAMERA TERMINATION.

SUPPLEMENTAL DRAWING

| NO. | DATE | APPR. | REMARKS |
|---|---|---|---|
| 1 | 8/29/19 | MMA | REPLACED ENTIRE DRAWING WITH NEW CAMERA TYPE |

**UTAH DEPARTMENT OF TRANSPORTATION**
STANDARD DRAWINGS FOR ROAD AND BRIDGE CONSTRUCTION
SALT LAKE CITY, UTAH

RECOMMENDED FOR APPROVAL — AUG. 29, 2019 DATE
CHAIRMAN STANDARDS COMMITTEE APPROVED — AUG. 29, 2019 DATE
DEPUTY DIRECTOR

CCTV MOUNTING DETAIL AND WIRING DIAGRAM
STANDARD DRAWING TITLE

STD. DWG. NO.
AT 10B

04-SEP-2019 DGN File:L:\Standard_Drawings\Imperial\2017 Approved_Supplemental_Issues\Suppl0 Approved August - 2019\Backup\AT10B.dgn

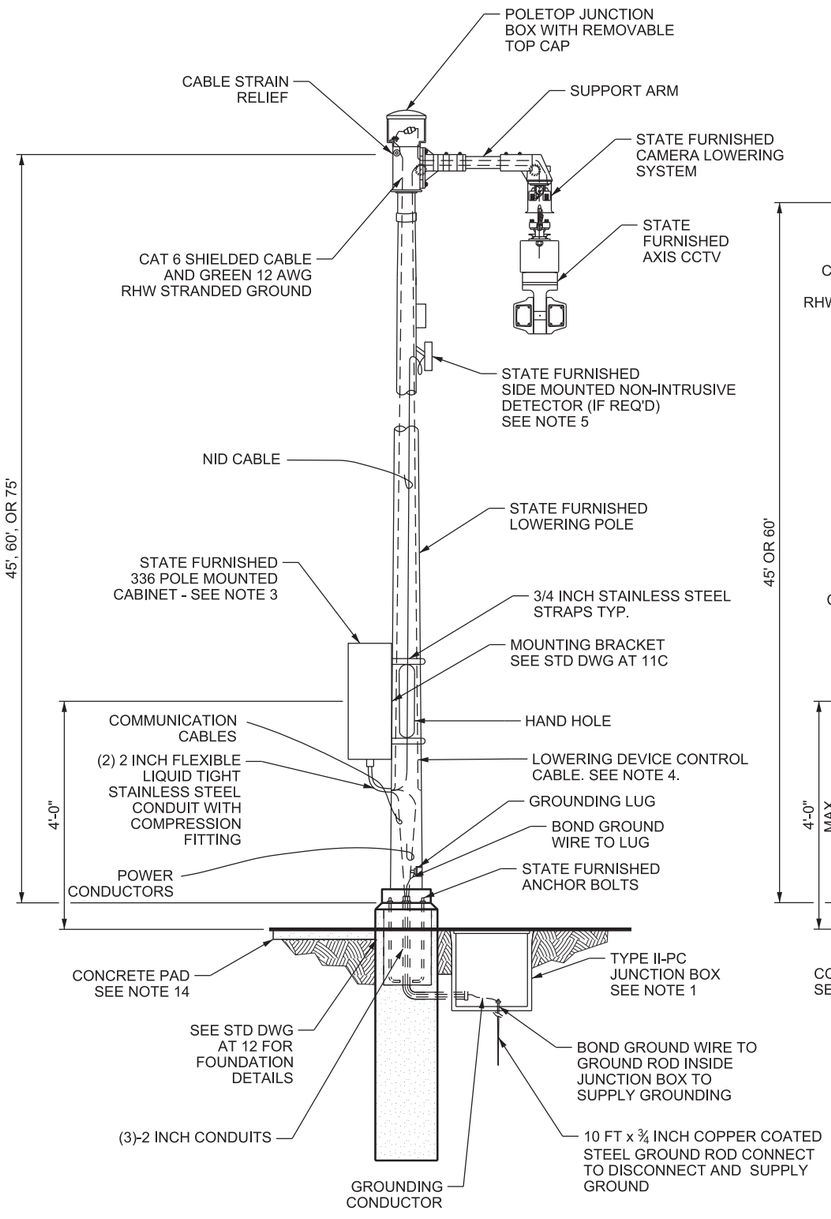


## (A) CAMERA LOWERING POLE DETAIL

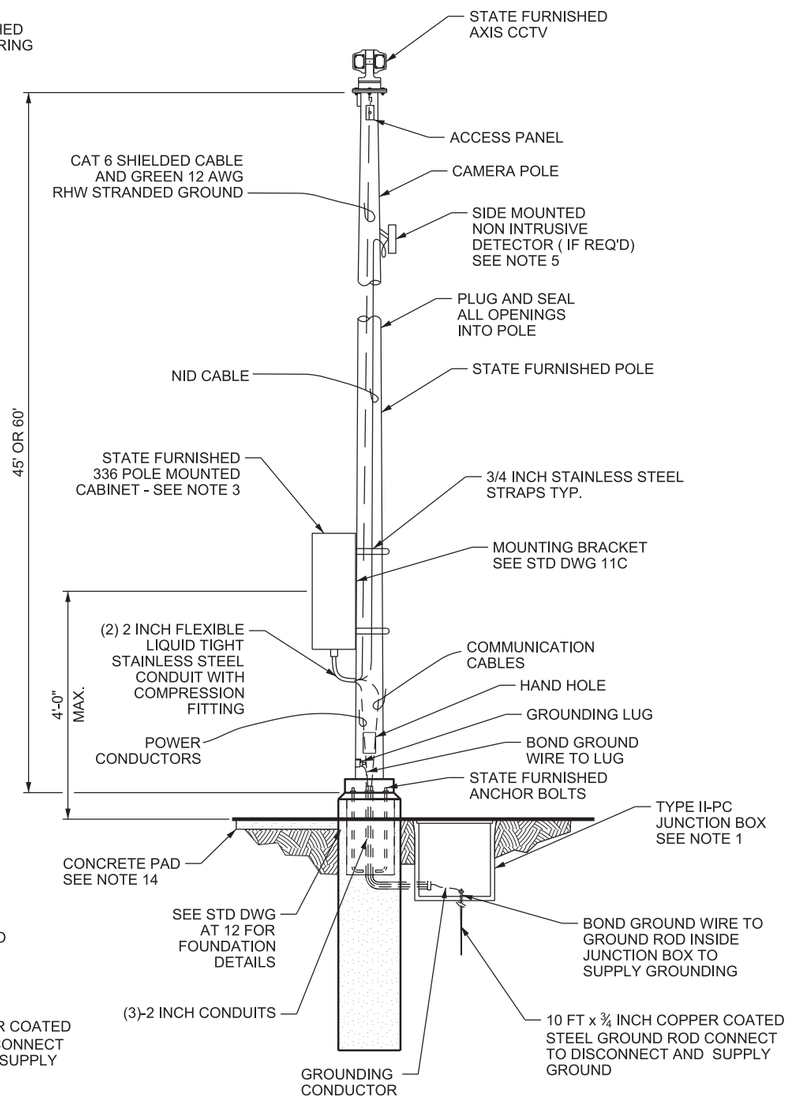


## (B) NON-LOWERING CCTV POLE DETAIL

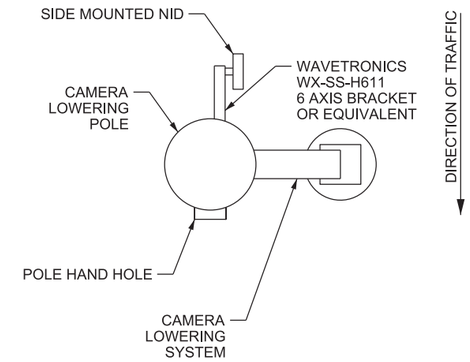


## (C) CAMERA LOWERING POLE NID MOUNTING DETAIL TOP VIEW

**NOTES:**

1. REFER TO STD DWG AT 7 FOR JUNCTION BOX DETAILS.
2. REFER TO STD DWG AT 10A AND 10B FOR CAMERA MOUNTING DETAILS.
3. USE POLE MOUNTED CABINET UNLESS PAD MOUNTED ATMS CABINET IS CALLED FOR ON PLANS.
4. LOWERING CABLE MUST NOT CONTACT ANY OTHER CABLE.
5. MOUNT NID TO NOT INTERFERE WITH CAMERA LOWERING OPERATION. MOUNT NID 30'-0" ABOVE GROUND SURFACE OR, AS SPECIFIED.
6. LOCATE POLE AT STATION AND OFFSET AS SHOWN.
7. CABINET MUST NOT INTERFERE WITH CAMERA LOWERING OPERATION.
8. ERECT CAMERA LOWERING POLE WITH HAND HOLE ON DOWN STREAM TRAFFIC SIDE OF POLE.
9. DO NOT INSTALL CAMERA LOWERING SYSTEM OR NID ON SAME SIDE OF POLE AS HAND HOLE.
10. ALL CONDUIT ENTRY MUST BE THROUGH BOTTOM OF CABINET.
11. ALL FLEXIBLE STEEL CONDUIT MUST BE INTENDED FOR OUTDOOR APPLICATION.
12. SEE STD DWG AT 11C FOR CABINET POLE MOUNTING DETAILS.
13. REFER TO STANDARD SPECIFICATION 16530 FOR GROUNDING REQUIREMENTS.
14. PROVIDE AN 8 FT LONG X 3 FT WIDE X 4 INCH DEEP CONCRETE PAD, CENTERED UNDER THE MODEL 336 STATE FURNISHED POLE MOUNTED CABINET.

SUPPLEMENTAL DRAWING

| NO. | DATE | APPR. | REMARKS |
|---|---|---|---|
| 1 | 8/29/19 | MMA | REPLACED POSITION CAMERA WITH AXIS. ADDED CAT6 CABLE TO DETAILS. |

**UTAH DEPARTMENT OF TRANSPORTATION**
STANDARD DRAWINGS FOR ROAD AND BRIDGE CONSTRUCTION
SALT LAKE CITY, UTAH

RECOMMENDED FOR APPROVAL — DATE: AUG. 29, 2019
CHAIRMAN STANDARDS COMMITTEE APPROVED — DATE: AUG. 29, 2019
DEPUTY DIRECTOR

STANDARD DRAWING TITLE: CCTV POLE MOUNTING DETAILS

STD. DWG. NO. AT 11A

DGN File:L:\Standard Drawings\Imperial\2017 Approved_Supplemental Issues\Suppl0 Approved August - 2019\Backup1\AT11A.dgn
04-SEP-2019

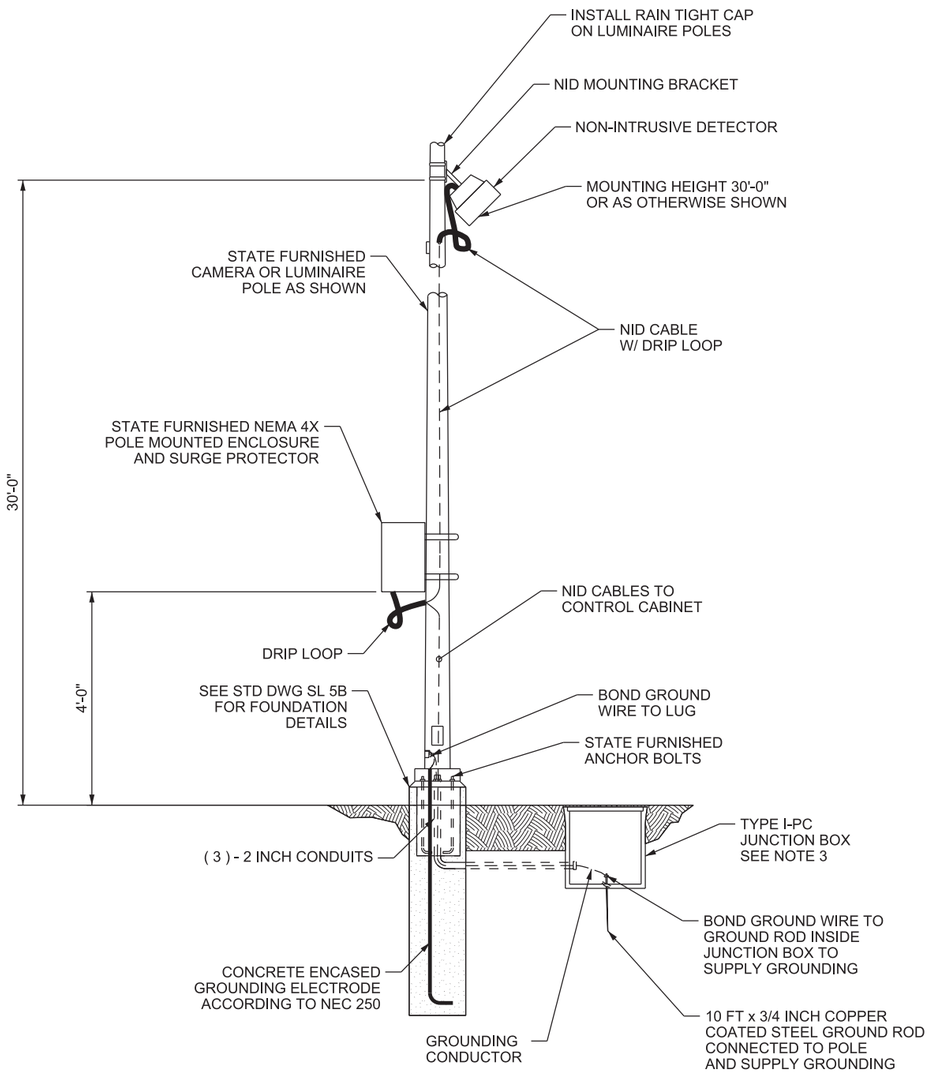


## A NID MOUNTING DETAIL
## NON-LOWERING AND LUMINAIRE POLES

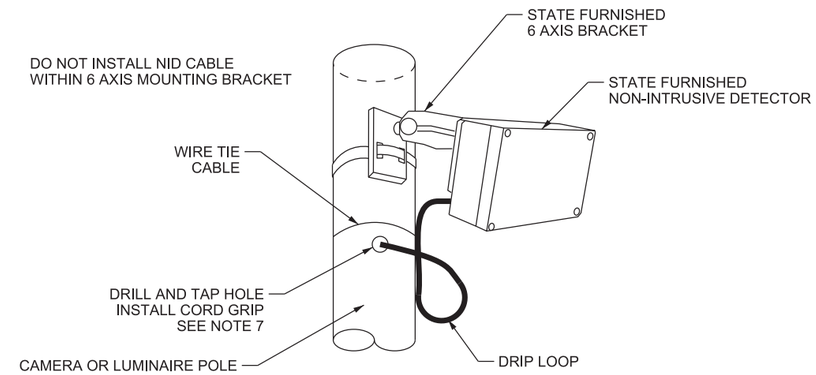


## B NID MOUNT ASSEMBLY DETAILS
## NON-LOWERING AND LUMINAIRE POLES

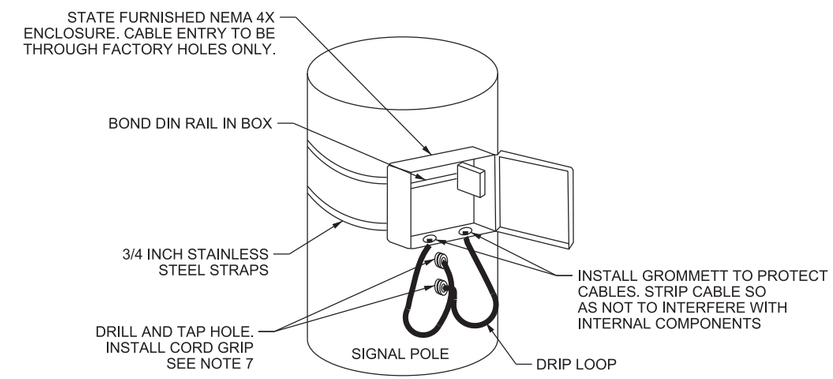


## C POLE MOUNT ENCLOSURE DETAILS
## CABLE ENTRY THROUGH BOTTOM

**NOTES:**

1. STATION POLE NO MORE THAN 240 FT PERPENDICULAR DISTANCE TO FARTHEST EDGE OF PAVEMENT.
2. LOCATE POLE AT STATION AND OFFSET AS SHOWN.
3. REFER TO STD DWG AT 7 FOR JUNCTION BOX DETAILS.
4. USE TYPE I PC JUNCTION BOX ON POLES USING NEMA 4X BOX. USE TYPE II PC JUNCTION BOX ON POLES USING NEMA 3S OR 336 POLE MOUNTED CABINETS.
5. REFER TO STD DWG SL 5B, SL 5C, AND SL 5D FOR LUMINAIRE POLE DETAILS.
6. REFER TO STD DWG AT 11A AND AT 12 FOR CCTV POLE DETAILS.
7. SUPPLY AND INSTALL CORD CONNECTOR SIZED APPROPRIATELY FOR WIRE. USE THOMAS AND BETTS, REMKE OR, HUBBELL SHC1023 CORD CONNECTORS.
8. USE SIDE MOUNT NID BRACKET ON CAMERA LOWERING POLE. DO NOT MOUNT NID DIRECTLY ABOVE HAND HOLE OR IN THE CAMERA LOWERING PATH.
9. PLACE CABLES INTO POLE MOUNT NEMA 4X ENCLOSURE THROUGH BOTTOM ONLY. DO NOT DRILL HOLES IN BACK OF ENCLOSURE.
10. REFER TO STANDARD SPECIFICATION 16530 FOR CONCRETE ENCASED ELECTRODE REQUIREMENTS.
11. USE EPOXY SPLICE KIT IF DROP CABLE IS TOO SHORT TO REACH CONTROL CABINET. SPLICE NID CABLE IN JUNCTION BOX, LEAVE 6 FT OF SLACK NEATLY STORED IN JUNCTION BOX.
12. INSTALL NEMA 4X ENCLOSURE AND CLICK 200 SURGE PROTECTOR WHEN CONTROL CABINET IS ACROSS THE ROADWAY FROM NID POLE.

SUPPLEMENTAL DRAWING

REVISIONS

| NO. | DATE | APPR. | REMARKS |
|---|---|---|---|
| 1 | 8/29/19 | MMA | REVISED MOST OF DRAWING TO REFLECT NEW EQUIPMENT |

**UTAH DEPARTMENT OF TRANSPORTATION**
STANDARD DRAWINGS FOR ROAD AND BRIDGE CONSTRUCTION
SALT LAKE CITY, UTAH

RECOMMENDED FOR APPROVAL — AUG. 29, 2019 DATE
CHAIRMAN STANDARDS COMMITTEE APPROVED — AUG. 29, 2019 DATE
DEPUTY DIRECTOR

NON-INTRUSIVE DETECTOR MOUNTING DETAILS
STANDARD DRAWING TITLE

STD. DWG. NO.
AT 11B

04-SEP-2019 DGN File:L:\Standard Drawings\Imperial\2017 Approved_Supplemental_Issues\Supp10 Approved August - 2019\Backup1\AT11B.dgn

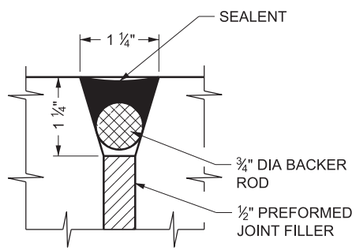


**TYPE 1**

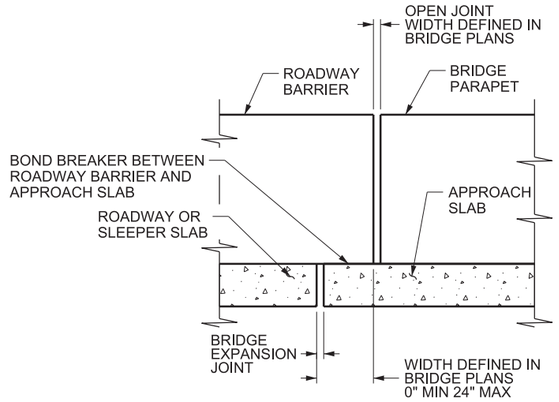


**TYPE 2**

## EXPANSION JOINT DETAILS

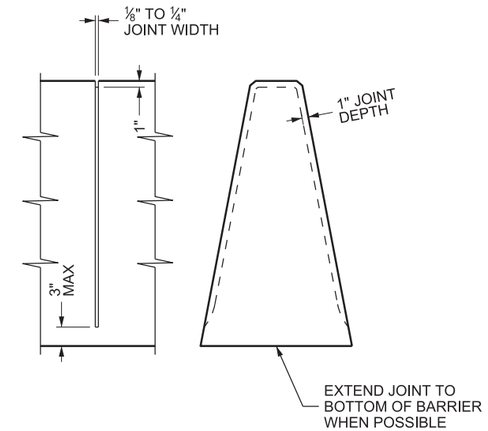


**ELEVATION** **END VIEW**

## SAW CUT CONTRACTION JOINT

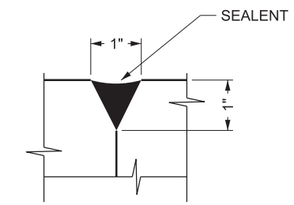


## FORMED CONTRACTION JOINT

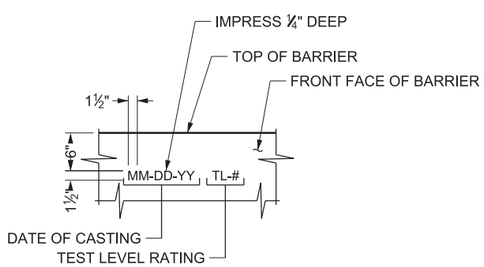


## CAST-IN-PLACE BARRIER MARKING DETAIL

PLACE AT BEGINNING, END, AND AT 1,000-FT INTERVALS

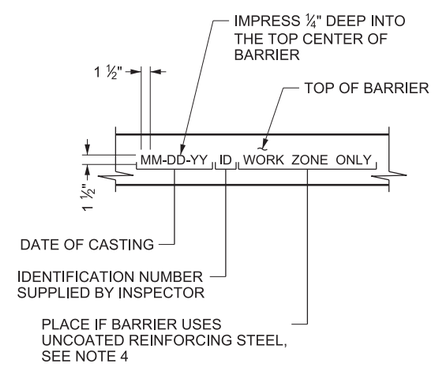


## PRECAST BARRIER MARKING DETAIL

**LEGEND**

A.S. = AS SHOWN
CIP = CAST-IN-PLACE
DIA = DIAMETER
EQ = EQUAL
R = RADIUS
SPA = SPACES

**GENERAL NOTES:**

1. PAVEMENT OVERLAY LIMITATIONS - EFFECTIVE BARRIER IS MEASURED FROM TOP OF PAVEMENT TO TOP OF BARRIER. DO NOT PLACE PAVEMENT OVERLAY THAT REDUCES EFFECTIVE BARRIER TO LESS THAN THE EFFECTIVE BARRIER LIMIT:
   - A. 32 INCH NEW JERSEY BARRIER: DO NOT OVERLAY MATERIAL PAST THE FIRST BREAK POINT OF BARRIER. FIRST BREAK POINT IS 3 INCHES ABOVE BOTTOM OF BARRIER. EFFECTIVE BARRIER LIMIT IS 29 INCHES.
   - B. 42 INCH CONSTANT SLOPE BARRIER: EFFECTIVE BARRIER LIMIT IS 36 INCHES
   - C. 54 INCH CONSTANT SLOPE BARRIER: EFFECTIVE BARRIER LIMIT IS 48 INCHES.
2. USE CLASS AA(AE) CONCRETE.
3. USE COATED DEFORMED CARBON STEEL REINFORCEMENT BARS CONFORMING TO AASHTO M 284 OR M 111 AND AASHTO M 31 GRADE 60, RESPECTIVELY.
4. USE OF NON-COATED REINFORCING STEEL SCHEDULE ALLOWED FOR BARRIER SECTIONS CONSTRUCTED FOR USE IN WORK ZONE APPLICATIONS. MARK AS "WORK ZONE ONLY." SEE "PRECAST BARRIER MARKING DETAIL." DO NOT USE BARRIER MARKED AS "WORK ZONE ONLY" IN PERMANENT APPLICATIONS.
5. CONSTRUCT BARRIER BY FIXED FORM OR SLIP FORM METHOD.
6. PLACE A VERTICAL CONSTRUCTION JOINT AT END OF DAY'S POUR AND WHEN WORK IS HALTED FOR MORE THAN 2 HOURS.
7. PROVIDE END SECTION AT BARRIER ENDS AND AT INTERRUPTIONS IN THE BARRIER INCLUDING EXPANSION JOINTS AND CRASH CUSHIONS.
8. SEE STD DWG GW 6B FOR DELINEATION HARDWARE AND STD DWG GW 7A FOR DELINEATION SPACING.
9. PROVIDE 1.5 INCH MINIMUM COVER TO REINFORCING STEEL UNLESS NOTED OTHERWISE. REINFORCING STEEL DIMENSIONS ARE OUT TO OUT AND INSIDE BEND RADII ARE SHOWN. BEND STIRRUPS OUT OF PLANE IF NECESSARY TO MEET MINIMUM CLEARANCE.
10. LOCATE EXPANSION JOINTS IN CONCRETE BARRIER AT ALL TRANSITIONS AND APPROACH SLABS. USE A TYPE 1 EXPANSION JOINT AT TRANSITIONS. USE A TYPE 2 EXPANSION JOINT AT APPROACH SLABS.
11. INSTALL ELECTRICAL/ATMS CONDUITS, JUNCTION BOXES, AND PULL BOXES AS REQUIRED PER CONTRACT DOCUMENTS.
12. SAW OR CUT CONTRACTION JOINTS 1 INCH DEEP AT PAVEMENT TRANSVERSE JOINTS OR AT 15 FT MAX SPACING WHEN PLACED ON ASPHALT PAVEMENT. SAW OR CUT WITHIN 10 HOURS OF CONCRETE PLACEMENT. USE FORM CONTRACTION JOINT DETAIL IF PLACING BARRIER BY FORM METHOD.

SUPPLEMENTAL DRAWING

REVISIONS

| NO. | DATE | APPR. | REMARKS |
|---|---|---|---|
| 1 | 08/29/19 | SDD | MOVED DESIGN ONLY NOTES TO RDM SHEETS. |

**UTAH DEPARTMENT OF TRANSPORTATION**
STANDARD DRAWINGS FOR ROAD AND BRIDGE CONSTRUCTION
SALT LAKE CITY, UTAH

RECOMMENDED FOR APPROVAL — AUG. 29, 2019 DATE
CHAIRMAN STANDARDS COMMITTEE APPROVED — AUG. 29, 2019 DATE
DEPUTY DIRECTOR

CONCRETE BARRIER GENERAL NOTES AND STANDARD DETAILS 1 OF 2

STANDARD DRAWING TITLE

STD. DWG. NO.
BA 1A1

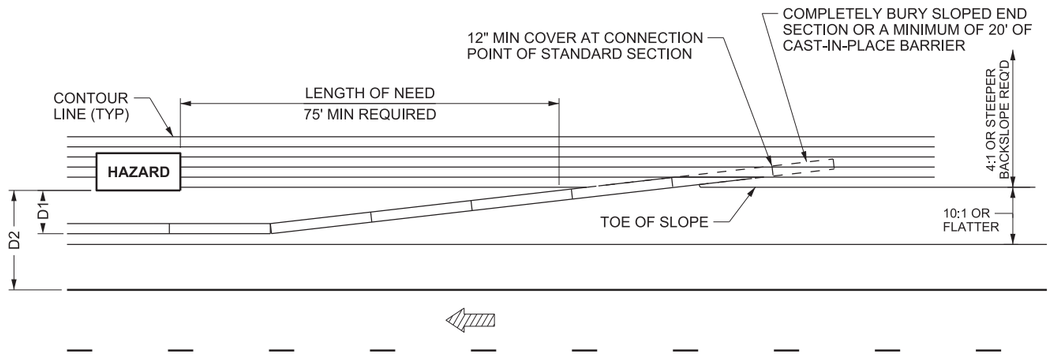


**LENGTH OF NEED (LON) FORMULAS FOR BURIED END SECTION**

**BACKSLOPE STEEPER THAN 3:1**
LON = FLR x D1

**BACKSLOPE 3:1 TO A MINIMUM 4:**
≥ 5O MPH "LON"= 450 - (15 x D2)
≤ 45 MPH "LON"= 250 - (15 x D2)

LON: LENGTH OF NEED
FLR: BARRIER FLARE RATE
D1: DISTANCE FROM FACE OF BARRIER TO FACE OF HAZARD OR DITCH BOTTOM
D2: DISTANCE FROM EDGE OF TRAVEL LANE TO FACE OF HAZARD OR DITCH BOTTOM

## BURIED END SECTION PLAN

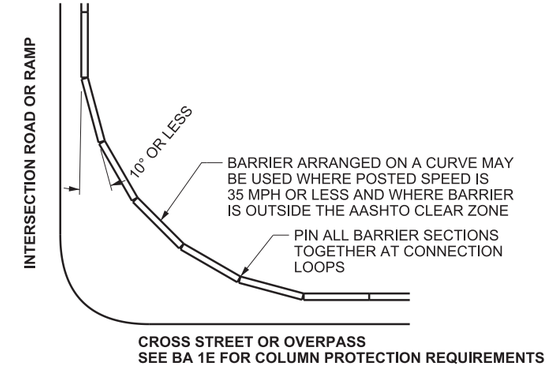


## CURVED LAYOUT

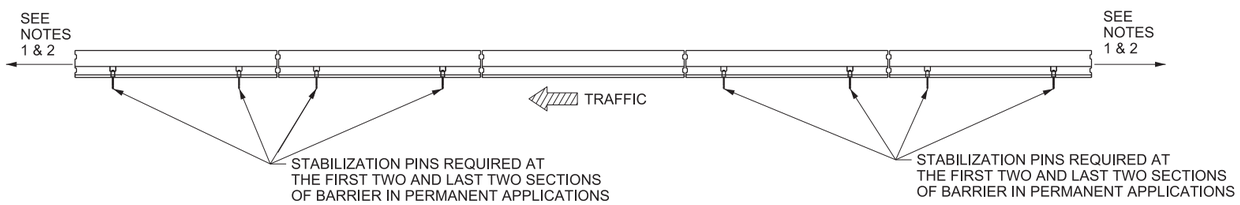


## TYPICAL ELEVATION

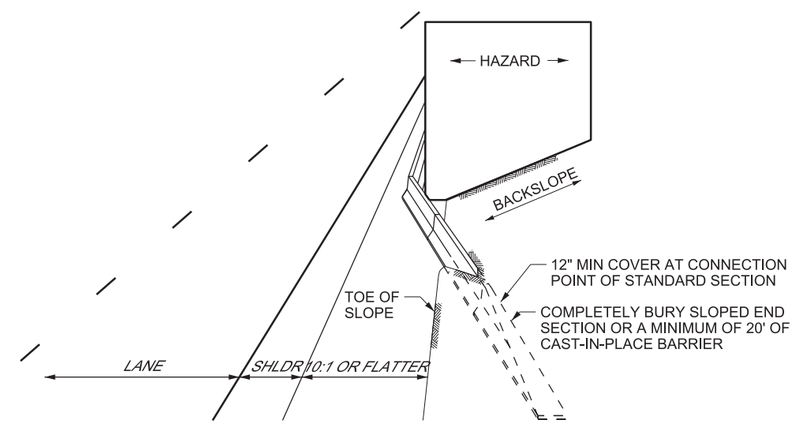


## BURIED END SECTION PERSPECTIVE VIEW

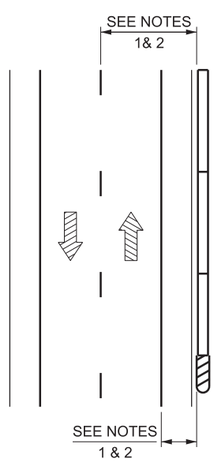


## TWO LANE / TWO WAY

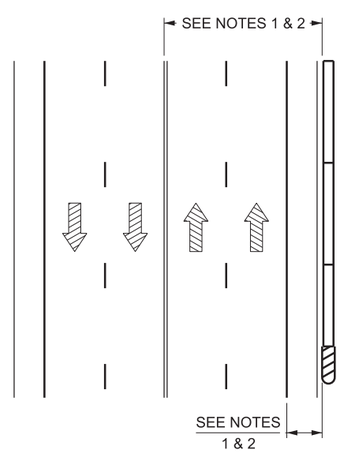


## MULTI-LANE ARTERIAL

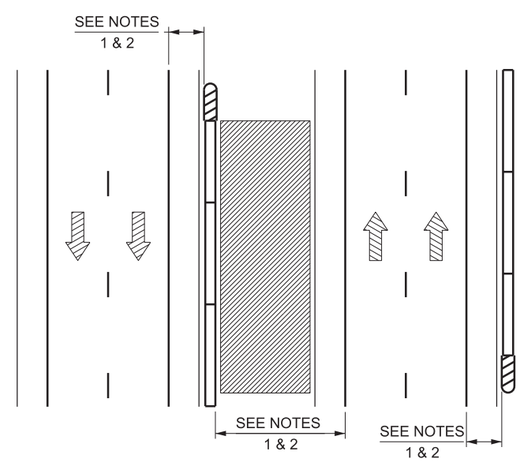


## MULTI-LANE ARTERIAL WITH TRAVERSABLE MEDIAN

**GENERAL NOTES:**

1. INSTALL APPROPRIATE END TREATMENT, CRASH CUSHION, OR END SECTION WHEN BARRIER END IS WITHIN THE MAXIMUM REQUIRED AASHTO CLEAR ZONE. DO NOT EXTEND FLARED BARRIER IN ORDER TO MOVE END OF BARRIER OUTSIDE OF CLEAR ZONE TO AVOID USING END PROTECTION.
   A. SELECT APPROPRIATE END TREATMENT OR CRASH CUSHION FROM THE GUIDELINES FOR CRASH CUSHIONS AND BARRIER END TREATMENTS WHEN DESIGN SPEED EXCEEDS 40 MPH. USE AN END TREATMENT WHEN RECOVERY AREA BEHIND SELECTED SYSTEM IS ACHIEVED.
   B. APPROACH END NON-DIVIDED ROADWAYS: INSTALL A SLOPED END SECTION WHEN DESIGN SPEED FOR ROADWAY IS 40 MPH OR LESS. USE APPROPRIATE SECTION FOR BARRIER TYPE.
   C. TRAILING END NON-DIVIDED ROADWAYS: INSTALL A SLOPED END SECTION ON TRAILING ENDS WHEN AN END TREATMENT OR CRASH CUSHION IS NOT REQUIRED.
2. INSTALL APPLICABLE BARRIER TRANSITION PRIOR TO INSTALLING W-BEAM, END TREATMENT, OR CRASH CUSHION WHEN A CONSTANT SLOPE SYSTEM IS USED.
3. PLACEMENT WITH CURBS:
   A. 32 INCH BARRIER: 10-FT SET BACK REQUIRED FROM FACE OF CURB.
   B. 42 INCH AND 54 INCH BARRIER: 10-FT SET BACK RECOMMENDED FROM FACE OF CURB.
4. SLOPED END SECTION DOES NOT NEED TO BE PLACED ON A PAVED SURFACE WHEN USED IN A BURIED END SECTION APPLICATION.

SUPPLEMENTAL DRAWING

REVISIONS

| NO. | DATE | APPR. | REMARKS |
|---|---|---|---|
| 1 | 08/29/19 | SDD | MOVED DESIGN ONLY NOTES TO RDM SHEETS. |

**UTAH DEPARTMENT OF TRANSPORTATION**
STANDARD DRAWINGS FOR ROAD AND BRIDGE CONSTRUCTION
SALT LAKE CITY, UTAH

RECOMMENDED FOR APPROVAL — AUG. 29, 2019 DATE
CHAIRMAN STANDARDS COMMITTEE APPROVED — AUG. 29, 2019 DATE
DEPUTY DIRECTOR

CONCRETE BARRIER LAYOUT
STANDARD DRAWING TITLE

STD. DWG. NO.
BA 1D

DGN File:L:\Standard.Drawings\Imperial\2017 Approved_Supplemental.Issues\Suppl0 Approved August - 2019\Backup1\BA01D.dgn
04-SEP-2019

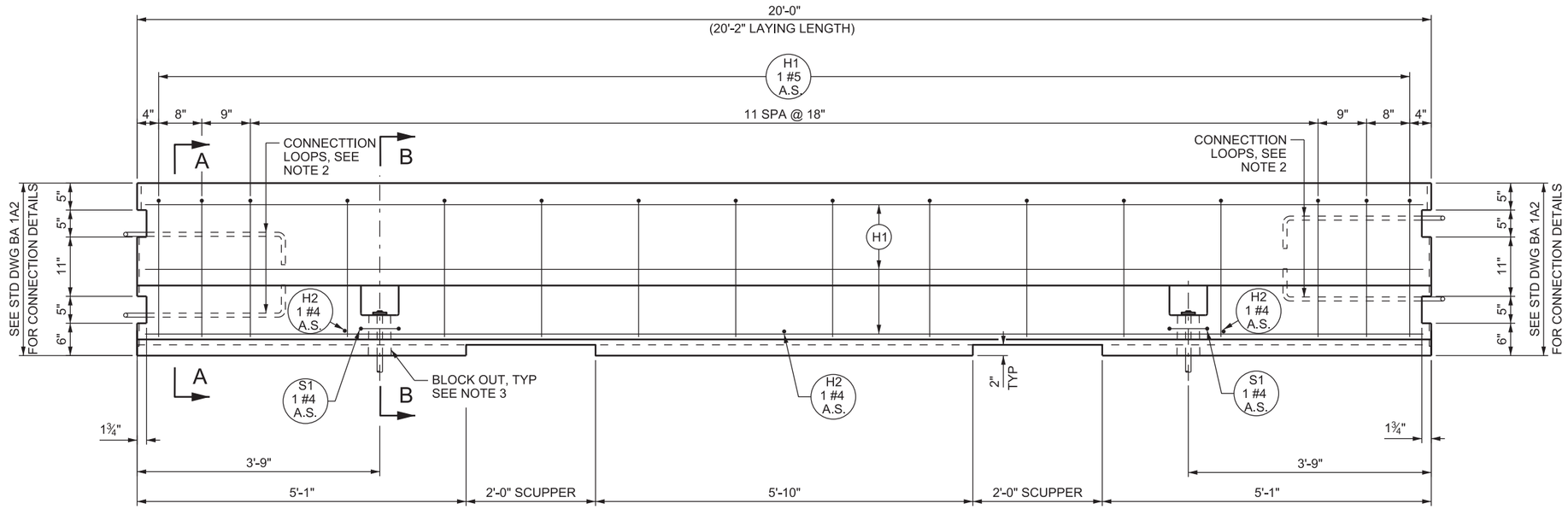


## ELEVATION

| BAR MARK | BAR SIZE | NO. BARS | LOCATION | SKETCH |
|---|---|---|---|---|
| H1 | #5 | 7 | HORIZONTAL IN BARRIER TIED INSIDE V1 BARS | 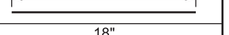  |
| H2 | #4 | 3 | ABOVE H1 BAR AND TIED TO V1 BAR | |
| S1 | #4 | 2 | HORIZONTAL AROUND BLOCK OUTS<br>TOTAL LENGTH = 5'-3 1/2" | 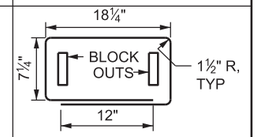  |
| V1 | #5 | 16 | VERTICAL IN BARRIER<br>TOTAL LENGTH = 4'-10 1/2" | 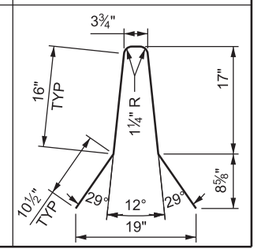  |

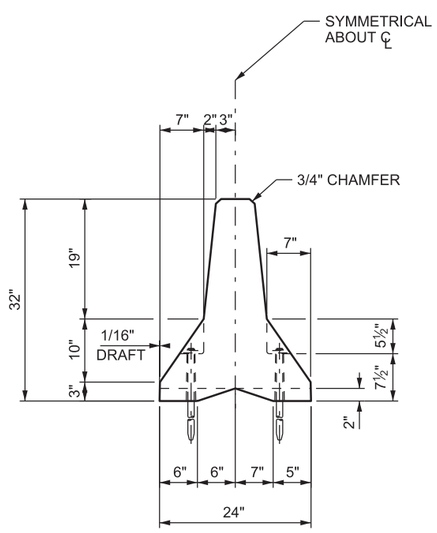


## SECTION A-A

REBAR NOT SHOWN FOR CLARITY

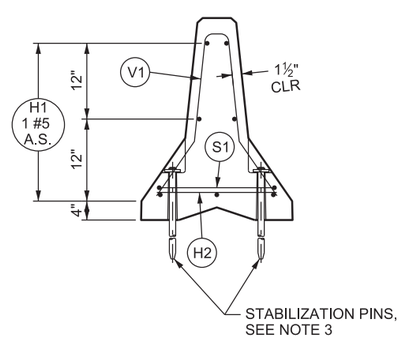


## SECTION B-B

**NOTES**

1. SEE STD DWG BA 1A1 FOR GENERAL NOTES.
2. SEE "BARRIER CONNECTION DETAILS" ON STD DWG BA 1A2 FOR CONNECTION LOOP DETAILS.
3. SEE "BARRIER BLOCK OUT AND STABILIZATION PIN" ON STD DWG BA 1A2 FOR DETAILS.
4. PROVIDE SCUPPERS WHEN NOTED ON PLANS. DO NOT USE BARRIER SEAL WHEN SCUPPERS ARE PRESENT ON BARRIER.
5. EACH BARRIER UNIT WEIGHS 3.9 TONS.

SUPPLEMENTAL DRAWING

REVISIONS

| NO. | DATE | APPR. | REMARKS |
|---|---|---|---|
| 1 | 08/29/19 | SDD | MODIFIED DESIGN ONLY NOTES TO NOTES. |

**UTAH DEPARTMENT OF TRANSPORTATION**
STANDARD DRAWINGS FOR ROAD AND BRIDGE CONSTRUCTION
SALT LAKE CITY, UTAH

RECOMMENDED FOR APPROVAL — AUG. 29, 2019 DATE
CHAIRMAN STANDARDS COMMITTEE APPROVED — AUG. 29, 2019 DATE
DEPUTY DIRECTOR

PRECAST CONCRETE
BARRIER - 32 INCH
NEW JERSEY SHAPE

STANDARD DRAWING TITLE

STD. DWG. NO.
BA 2A

04-SEP-2019 DGN File:L:\Standard Drawings\Imperial\2017 Approved_Supplemental Issues\Suppl0 Approved August - 2019\Backup\BA02A.dgn

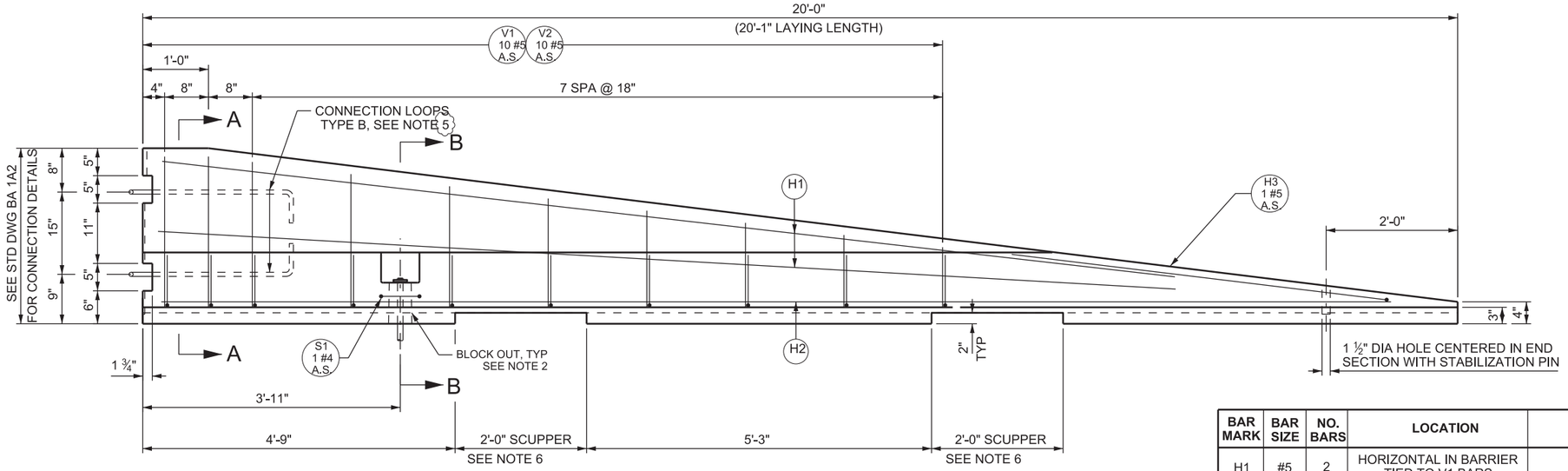


## ELEVATION

| BAR MARK | BAR SIZE | NO. BARS | LOCATION | SKETCH |
|---|---|---|---|---|
| H1 | #5 | 2 | HORIZONTAL IN BARRIER TIED TO V1 BARS | 15'-6" |
| H2 | #5 | 3 | HORIZONTAL IN BOTTOM OF BARRIER AND TIED INSIDE V2 BARS | 19'-1" |
| H3 | #5 | 1 | HORIZONTAL AT END OF BARRIER ALONG TOP SLOPE<br>TOTAL LENGTH = 13'-9" | 6'-0" TYP; 85° TYP; 1'-9" |
| S1 | #4 | 1 | HORIZONTAL AROUND BLOCK OUTS<br>TOTAL LENGTH = 5'-3 1/2" | 18 ¼"; 7 ¼"; BLOCK OUTS; 1 ½" R, TYP; 12" |
| V1 | #5 | 10 | VERTICAL IN BARRIER | L |
| V2 | #5 | 10 | VERTICAL IN BARRIER TIE TO V1 BARS<br>TOTAL LENGTH = 3'-7 1/2" | 12"; 55°; 55°; 12"; 19½" |

| L | QTY |
|---|---|
| 27" | 2 |
| 26" | 1 |
| 24" | 1 |
| 22" | 1 |
| 20" | 1 |
| 17" | 1 |
| 15" | 1 |
| 13" | 1 |
| 11" | 1 |

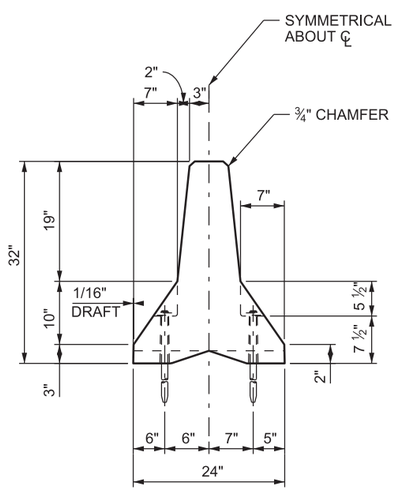


## SECTION A - A

REBAR NOT SHOWN FOR CLARITY

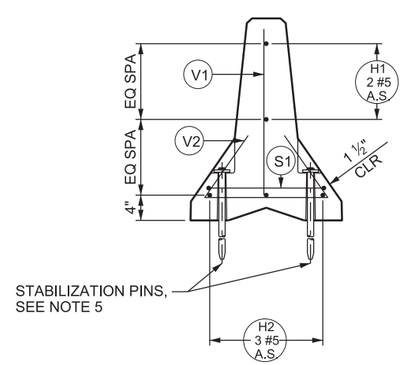


## SECTION B - B

**NOTES:**

1. SEE STD DWG BA 1A1 FOR GENERAL NOTES.
2. USE A SLOPED END SECTION AS ALLOWED ON STD DWG BA 1D.
3. USE PERMITTED IN WORK ZONES WHEN POSTED SPEED IS 40 MPH OR LESS PRIOR TO THE START OF THE CONSTRUCTION PROJECT.
4. SEE "BARRIER CONNECTION DETAILS" ON STD DWG BA 1A2 FOR CONNECTION LOOP DETAILS.
5. SEE "BARRIER BLOCK OUT AND STABILIZATION PIN" ON STD DWG BA 1A2 FOR DETAILS.
6. PROVIDE SCUPPERS WHEN NOTED ON PLANS. DO NOT USE BARRIER SEAL WHEN SCUPPERS ARE PRESENT ON BARRIER.
7. INSTALL STABILIZATION PINS IN ALL APPLICATIONS.
8. SLOPED END SECTION WEIGHS 2.6 TONS.

SUPPLEMENTAL DRAWING

REVISIONS

| NO. | DATE | APPR. | REMARKS |
|---|---|---|---|
| 1 | 08/29/19 | SDD | MODIFIED DESIGN ONLY NOTES TO NOTES. |

**UTAH DEPARTMENT OF TRANSPORTATION**
STANDARD DRAWINGS FOR ROAD AND BRIDGE CONSTRUCTION
SALT LAKE CITY, UTAH

RECOMMENDED FOR APPROVAL — AUG. 29, 2019 DATE
CHAIRMAN STANDARDS COMMITTEE APPROVED — AUG. 29, 2019 DATE
DEPUTY DIRECTOR

PRECAST CONCRETE BARRIER - 32 INCH NEW JERSEY SHAPE, SLOPED END SECTION (FOR SPEEDS ≤ 40 MPH)

STANDARD DRAWING TITLE

STD. DWG. NO.
BA 2B

DGN File:L:\Standard Drawings\Imperial\2017 Approved_Supplemental_Issues\Suppl0 Approved August - 2019\Backup1\BA02B.dgn
04-SEP-2019

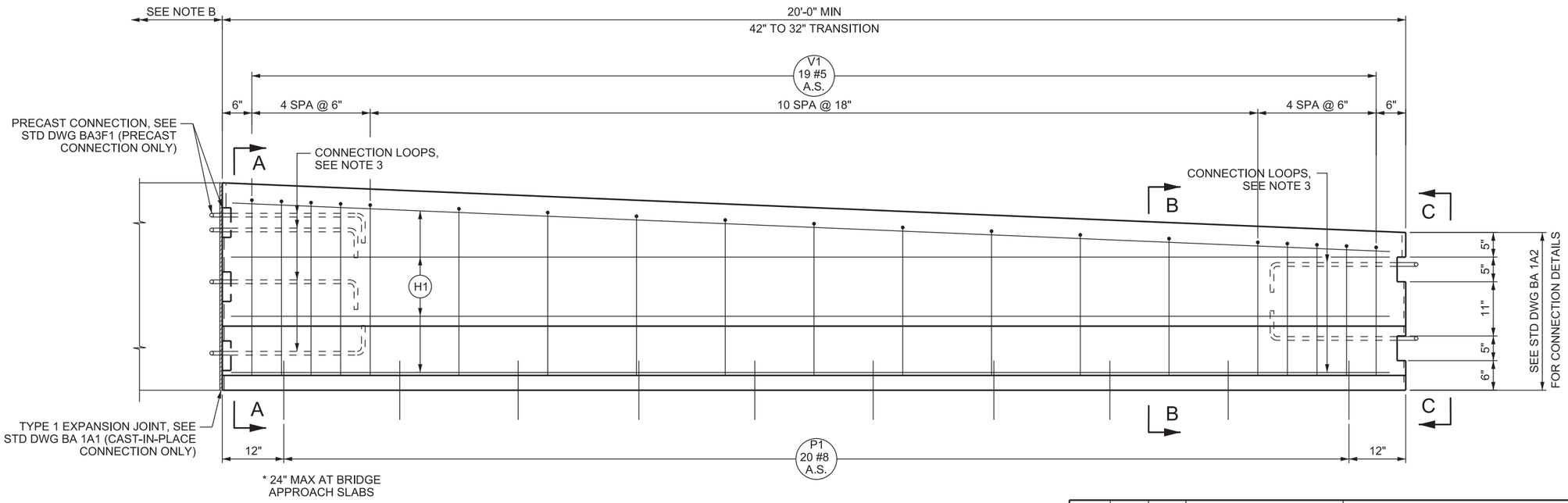


## ELEVATION

| BAR MARK | BAR SIZE | NO. BARS | LOCATION | SKETCH |
|---|---|---|---|---|
| H1 | #5 | 7 | HORIZONTAL IN BARRIER TIED INSIDE V1 BARS | 19'-3" |
| P1 | #8 | 20 | PAVEMENT TO BARRIER THROUGH LIMITS OF BARRIER (VERTICAL) | 12" OPTION 1; 12", 3" OPTION 2 |
| V1 | #5 | 19 | VERTICAL IN BARRIER | |

| H | W | QTY |
|---|---|---|
| 36 1/2" | 19 1/2" | 1 |
| 36" | 19" | 1 |
| 36" | 19" | 1 |
| 35 1/2" | 18 1/2" | 1 |
| 35 1/2" | 18 1/2" | 1 |
| 34 1/2" | 17 1/2" | 1 |
| 34" | 17" | 1 |
| 33" | 16" | 1 |
| 32 1/2" | 15" | 1 |
| 31 1/2" | 14 1/2" | 1 |
| 31" | 13 1/2" | 1 |
| 30" | 13" | 1 |
| 29 1/2" | 12" | 1 |
| 28 1/2" | 11" | 1 |
| 28" | 10 1/2" | 1 |
| 27 1/2" | 10" | 1 |
| 27 1/2" | 9 1/2" | 1 |
| 27" | 9" | 1 |
| 27" | 9" | 1 |

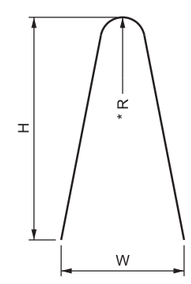


* BEND RADIUS VARIES OVER LENGTH OF BARRIER TRANSITION SECTION

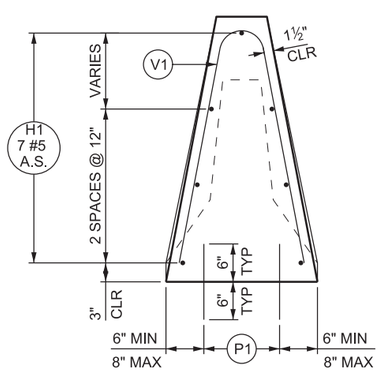


## SECTION A-A

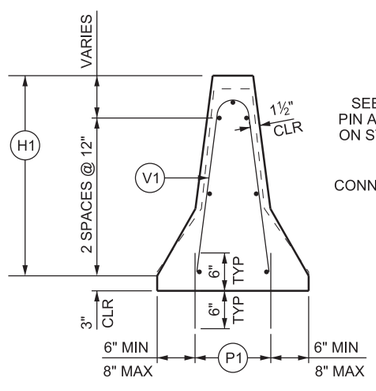


## SECTION B-B

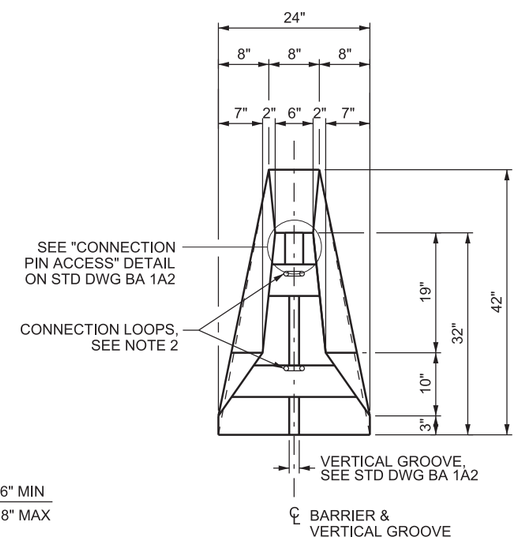


## VIEW C-C

**NOTES:**

1. SEE STD DWG BA 1A1 FOR GENERAL NOTES.
2. SEE "BARRIER CONNECTION DETAILS" ON STD DWG BA 1A2 FOR CONNECTION LOOP DETAILS. PLACE THE APPROPRIATE CONNECTION LOOP CONFIGURATION THAT CORRESPONDS WITH ADJACENT PRECAST BARRIER.
3. BARRIER SHAPE VARIES LINEARLY OVER LENGTH OF BARRIER TRANSITION.
4. BARRIER TRANSITIONS MAY BE LENGTHENED, WITH ENGINEER'S APPROVAL, TO ELIMINATE A GAP BETWEEN PRECAST AND CAST-IN-PLACE SECTIONS.
5. DRILL AND EPOXY BOND P1 BARS OR HAND POSITION WHILE CONCRETE IS IN A WORKABLE FORM WHEN USING PCCP PAVEMENT.

SUPPLEMENTAL DRAWING

REVISIONS

| NO. | DATE | APPR. | REMARKS |
|---|---|---|---|
| 1 | 08/29/19 | SDD | MODIFIED DESIGN ONLY NOTES TO NOTES. |

**UTAH DEPARTMENT OF TRANSPORTATION**
STANDARD DRAWINGS FOR ROAD AND BRIDGE CONSTRUCTION
SALT LAKE CITY, UTAH

RECOMMENDED FOR APPROVAL — AUG. 29, 2019 DATE
CHAIRMAN STANDARDS COMMITTEE APPROVED — AUG. 29, 2019 DATE
DEPUTY DIRECTOR

CAST-IN-PLACE CONCRETE BARRIER - 32 INCH NEW JERSEY SHAPE, 42 INCH CONSTANT SLOPE BARRIER TRANSITION

STANDARD DRAWING TITLE

STD. DWG. NO.
BA 2D

DGN File:L:\Standard.Drawings\Imperial\2017 Approved_Supplemental.Issues\Suppl0 Approved August - 2019\Backup1\BA020.dgn
04-SEP-2019

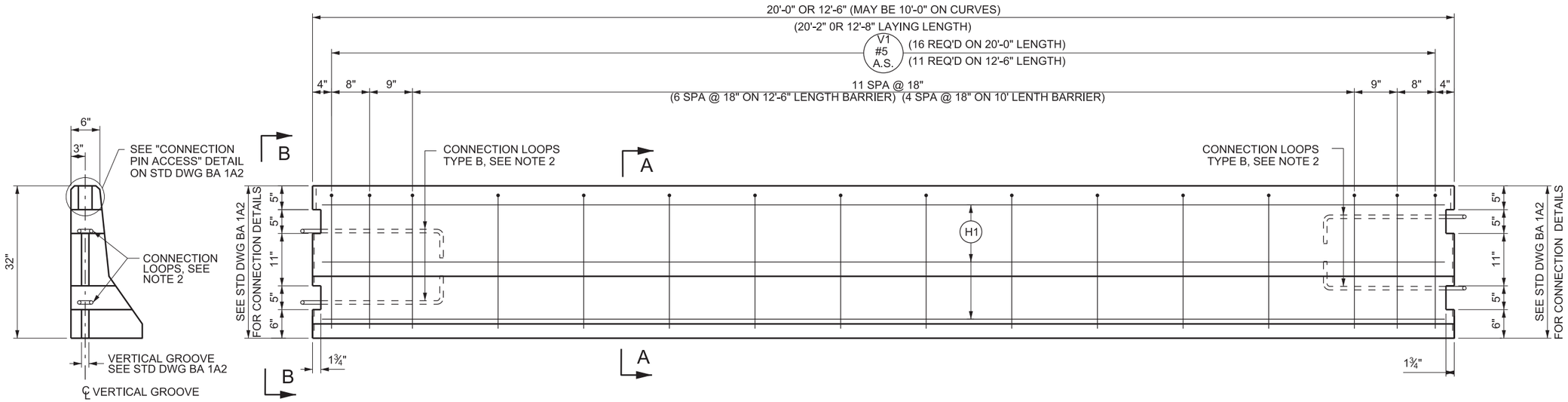


**VIEW B-B**

**ELEVATION**

| BAR MARK | BAR SIZE | NO. BARS | LOCATION | SKETCH |
|---|---|---|---|---|
| H1 | #5 | 6 | HORIZONTAL IN BARRIER TIED INSIDE V1 BARS | 19'-4" OR 11'-10" |
| V1 | #5 | 16 (20'-0" LENGTH) OR 11 (12'-6" LENGTH) 10 (10' LENGTH) | VERTICAL IN BARRIER<br>TOTAL LENGTH = 4'-10 1/2" | 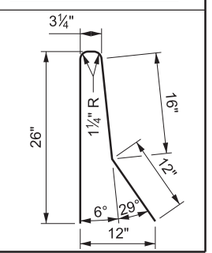 |



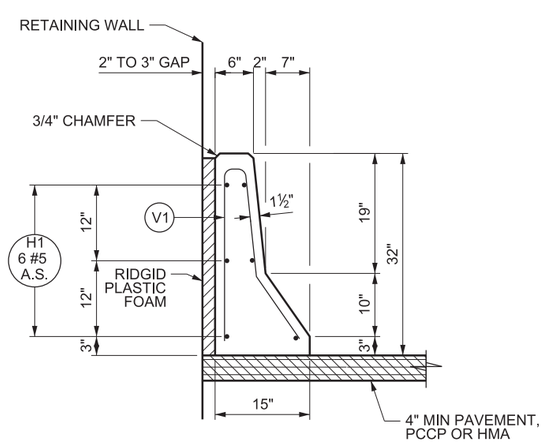


**SECTION A-A**

AT RETAINING WALL

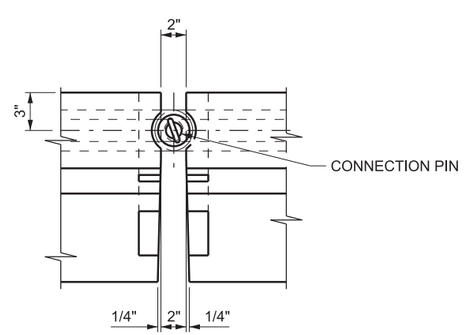


**PARTIAL PLAN**

**NOTES:**

1. SEE STD DWG BA 1A1 FOR GENERAL NOTES.
2. SEE "BARRIER CONNECTION DETAILS" ON STD DWG BA 1A2 FOR CONNECTION LOOP DETAILS.
3. DO NOT USE AS RETAINING BARRIER. REFER TO STD DWG BA 1C FOR RETAINING BARRIER APPLICATIONS.
4. USE ONLY IN FRONT OF A RETAINING WALL. DO NOT USE IN A WORK ZONE APPLICATION.
5. BARRIER UNIT WEIGHT: 3.0 TONS (20'-0" LENGTH)
   1.9 TONS (12'-6" LENGTH)

SUPPLEMENTAL DRAWING

REVISIONS

| NO. | DATE | APPR. | REMARKS |
|---|---|---|---|
| 1 | 08/29/19 | SDD | MODIFIED DESIGN ONLY NOTES TO NOTES. |

**UTAH DEPARTMENT OF TRANSPORTATION**

STANDARD DRAWINGS FOR ROAD AND BRIDGE CONSTRUCTION
SALT LAKE CITY, UTAH

RECOMMENDED FOR APPROVAL — AUG. 29, 2019 DATE

CHAIRMAN STANDARDS COMMITTEE APPROVED — AUG. 29, 2019 DATE

DEPUTY DIRECTOR

PRECAST CONCRETE HALF BARRIER - 32 INCH NEW JERSEY SHAPE

STANDARD DRAWING TITLE

STD. DWG. NO.

BA 2E

DGN File:L:\Standard.Drawings\Imperial\2017 Approved_Supplemental.Issues\Suppl0 Approved August - 2019\Backup1\BA02E.dgn
04-SEP-2019

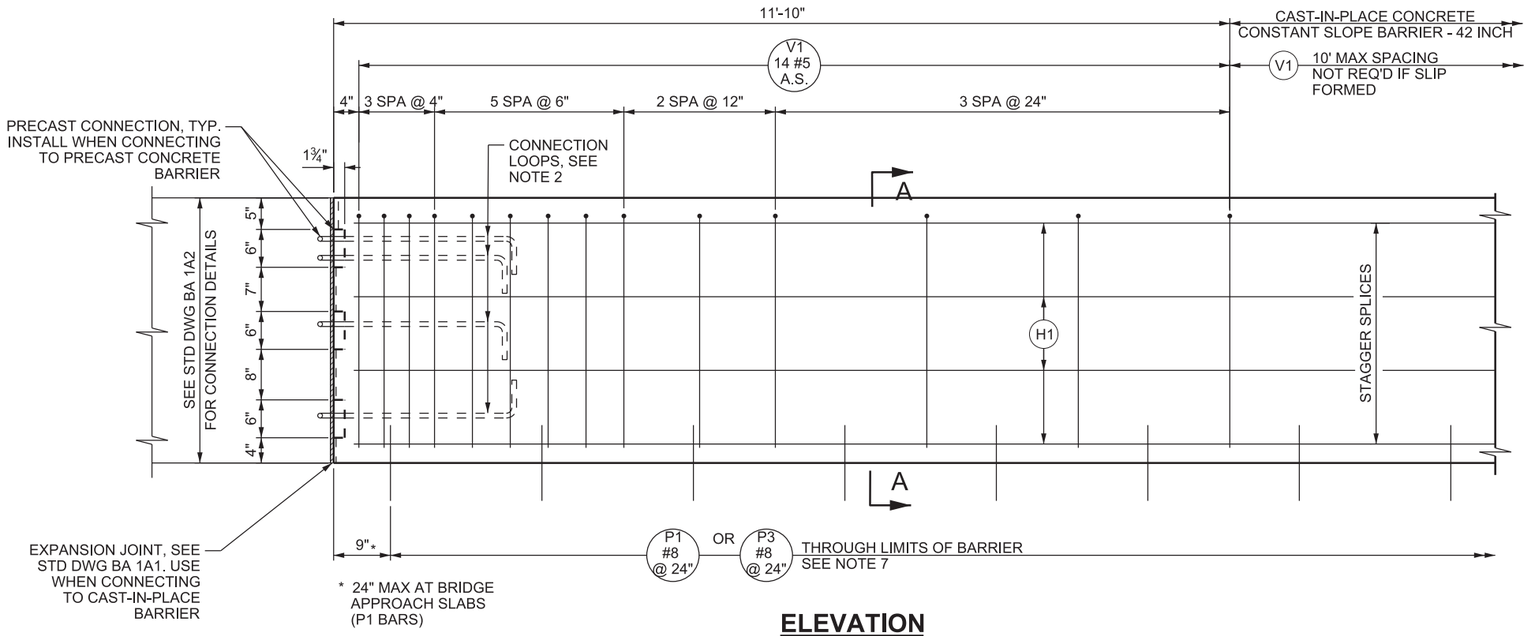


## ELEVATION

42" CONSTANT SLOPE BARRIER SHOWN,
STEPPED MEDIAN BARRIER SIMILAR

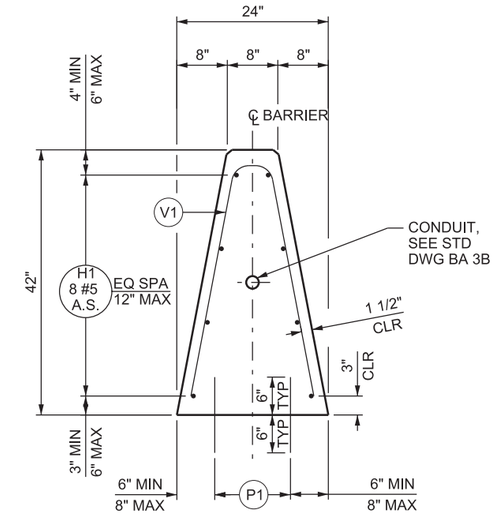


## SECTION A-A

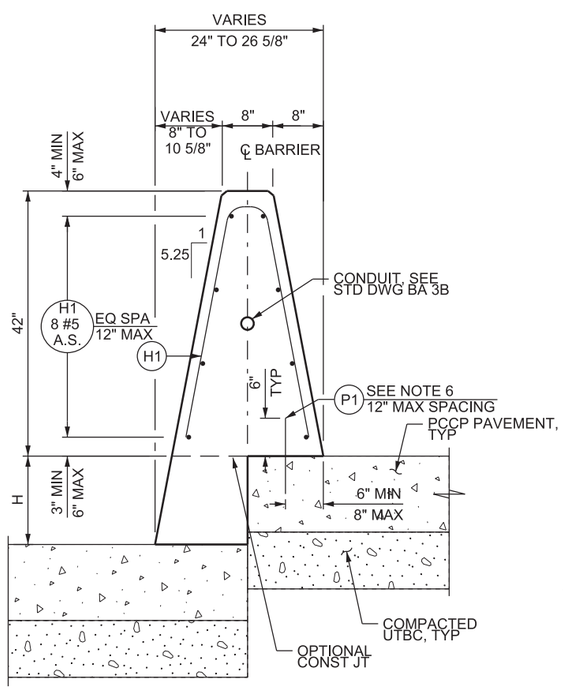


## STEPPED MEDIAN BARRIER

H = 0" TO 14" (PCCP ONLY)

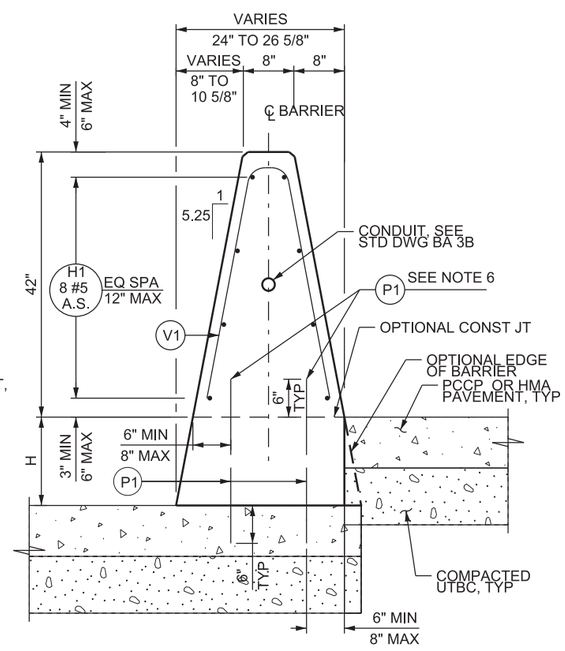


## STEPPED MEDIAN BARRIER

H = 0" TO 14" (PCCP HMA)

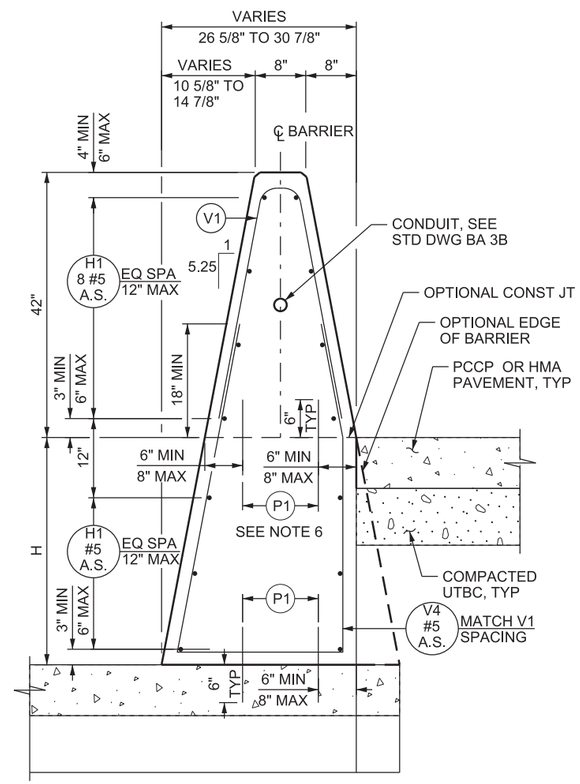


## STEPPED MEDIAN BARRIER

H = 14" TO 36"

**NOTES**

1. SEE STD DWG BA 1A1 FOR GENERAL NOTES.
2. SEE "BARRIER CONNECTION DETAILS" ON STD DWG BA 1A2 FOR CONNECTION LOOP DETAILS.
3. SEE STD DWG BA 3A2 FOR ADDITIONAL END SECTION DETAILS.
4. SEE STD DWG BA 3A3 FOR REINFORCING SCHEDULE AND NOTES.
5. V4 BAR SPACING MATCHES V1 SPACING SHOWN IN ELEVATION.
6. P1 BARS THROUGH THE OPTIONAL CONSTRUCTION JOINT ARE NOT REQUIRED IF THE CONSTRUCTION JOINT IS NOT USED OR IF THE V4 BARS ARE PRESENT.
7. USE A MAXIMUM OF 12 INCH SPACING FOR P1 BARS. SEE STEPPED MEDIAN BARRIER DETAILS FOR APPLICABLE LOCATION.

SUPPLEMENTAL DRAWING

REVISIONS

| NO. | DATE | APPR. | REMARKS |
|---|---|---|---|
| 1 | 08/29/19 | SDD | MODIFIED DESIGN ONLY NOTES TO CONSTRUCTION NOTES. |

**UTAH DEPARTMENT OF TRANSPORTATION**
STANDARD DRAWINGS FOR ROAD AND BRIDGE CONSTRUCTION
SALT LAKE CITY, UTAH

RECOMMENDED FOR APPROVAL — AUG. 29, 2019 DATE
CHAIRMAN STANDARDS COMMITTEE APPROVED — AUG. 29, 2019 DATE
DEPUTY DIRECTOR — DATE

CAST-IN-PLACE
CONCRETE CONSTANT
SLOPE BARRIER -
42 INCH
1 OF 3

STANDARD DRAWING TITLE

STD. DWG. NO.
BA 3A1

DGN File:L:\Standard Drawings\Imperial\2017 Approved_Supplemental_Issues\Suppl0 Approved August - 2019\Backup\BA03A1.dgn
04-SEP-2019

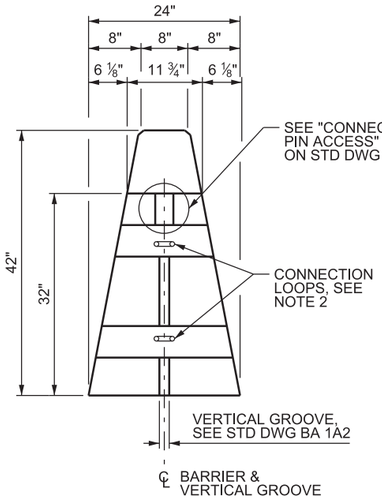


## VIEW B - B

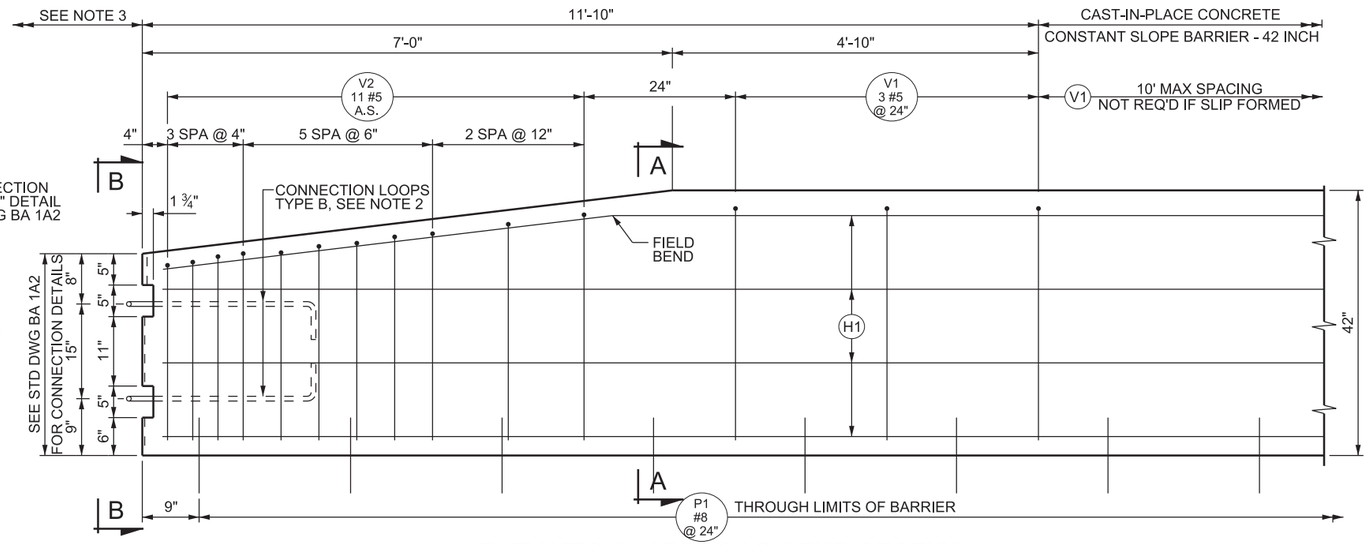


## ELEVATION - APPROACH END SECTION

TL-3 SHOWN; TL-5 SIMILAR

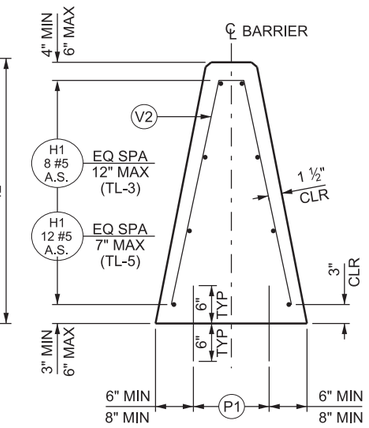


## SECTION A - A

TL-3 SHOWN; TL-5 SIMILAR

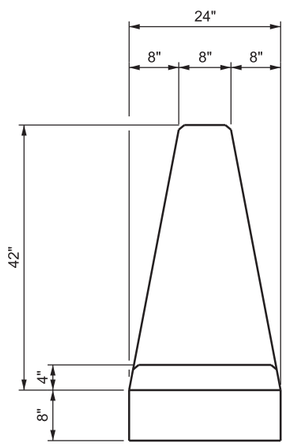


## VIEW D - D

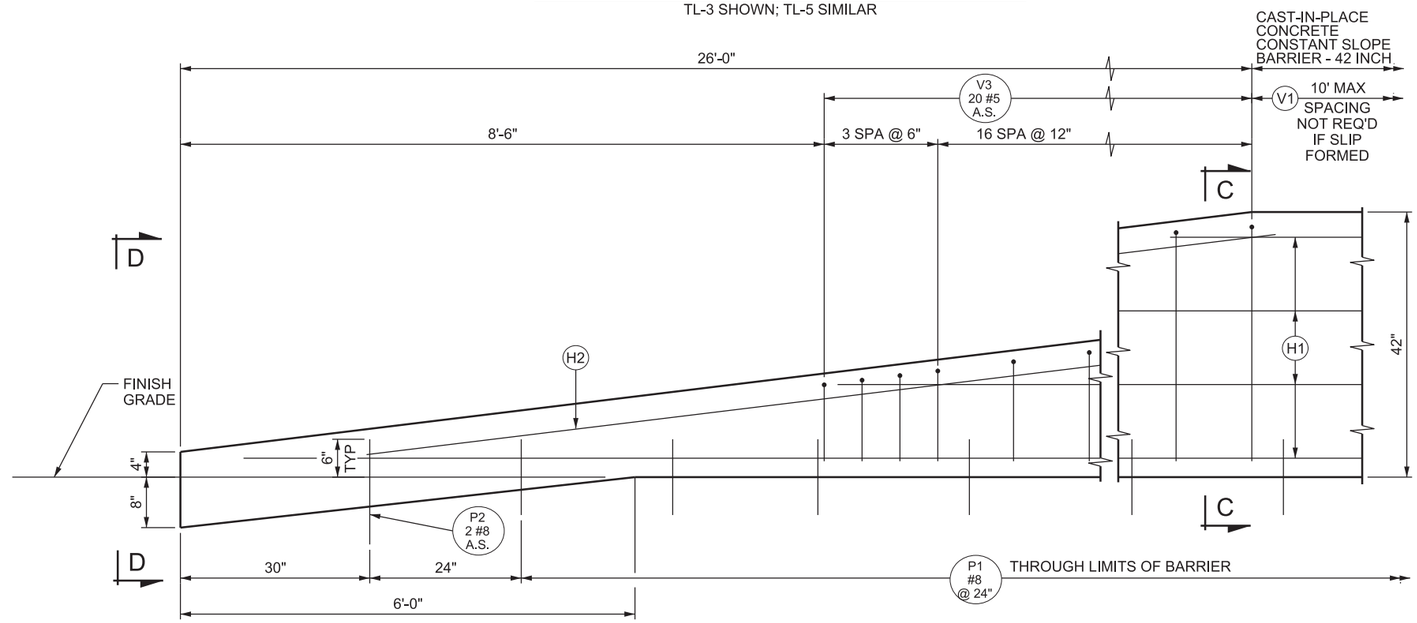


## ELEVATION - TRAILING SLOPED END SECTION

TL-3 SHOWN; TL-5 SIMILAR

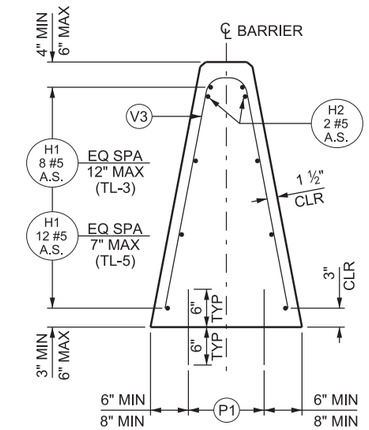


## SECTION C - C

TL-3 SHOWN; TL-5 SIMILAR

**NOTES:**

1. SEE STD DWG BA 1A1 FOR GENERAL NOTES.
2. SEE "BARRIER CONNECTION DETAILS" ON STD DWG BA 1A2 FOR CONNECTION LOOP DETAILS.
3. SEE STD DWG BA 3A3 FOR REINFORCING STEEL SCHEDULE AND NOTES.
4. USE H1 AND P1 BARS CONSISTENT WITH THE TEST LEVEL RATING OF ADJACENT BARRIER.

SUPPLEMENTAL DRAWING

REVISIONS

| NO. | DATE | APPR. | REMARKS |
|---|---|---|---|
| 1 | 08/29/19 | SDD | MOVED DESIGN ONLY NOTES TO RDM SHEETS. |

**UTAH DEPARTMENT OF TRANSPORTATION**
STANDARD DRAWINGS FOR ROAD AND BRIDGE CONSTRUCTION
SALT LAKE CITY, UTAH

RECOMMENDED FOR APPROVAL — AUG. 29, 2019 DATE
CHAIRMAN STANDARDS COMMITTEE APPROVED — AUG. 29, 2019 DATE
DEPUTY DIRECTOR

CAST - IN - PLACE CONCRETE CONSTANT SLOPE BARRIER - 42 INCH 2 OF 3
STANDARD DRAWING TITLE

STD. DWG. NO.
BA 3A2

DGN File:L:\Standard Drawings\Imperial\2017 Approved_Supplemental Issues\Suppl0 Approved August - 2019\Backup1\BA03A2.dgn
04-SEP-2019

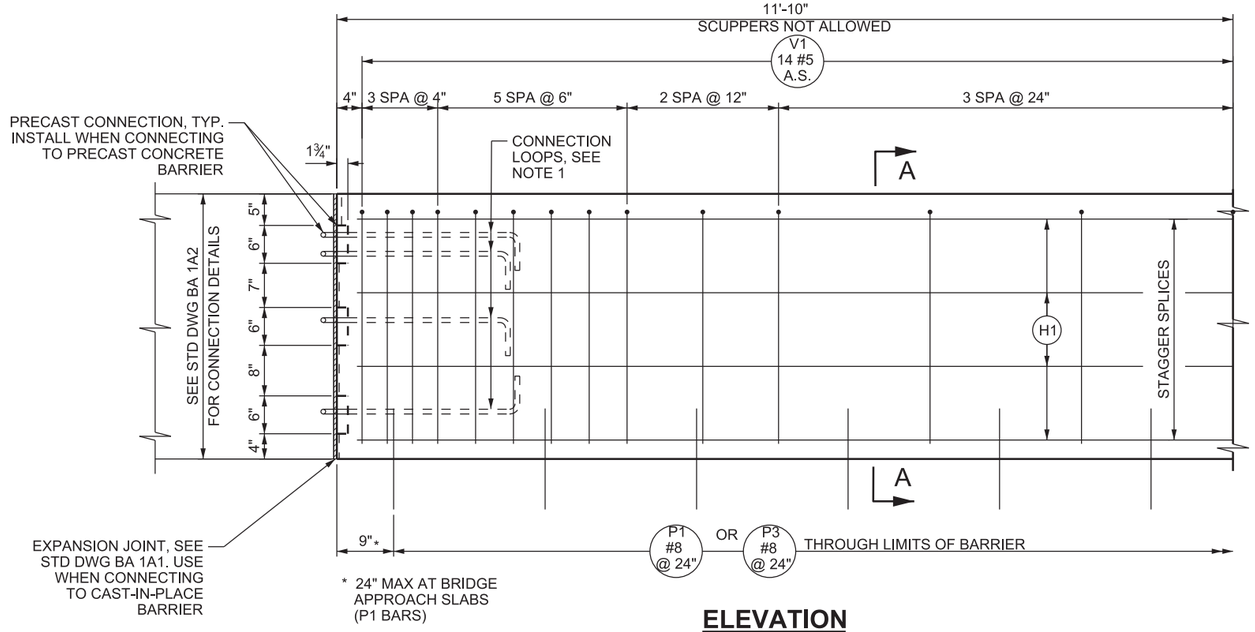


## ELEVATION

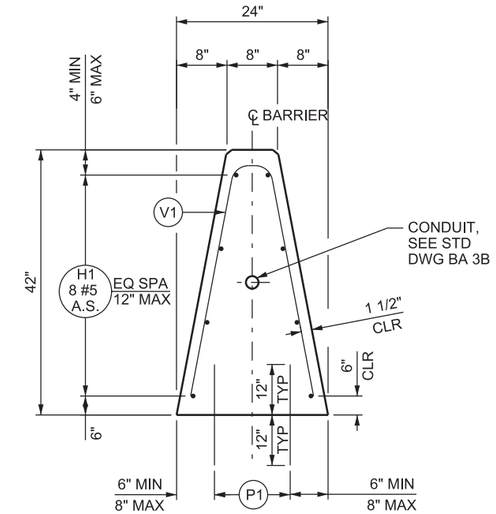


## SECTION A-A

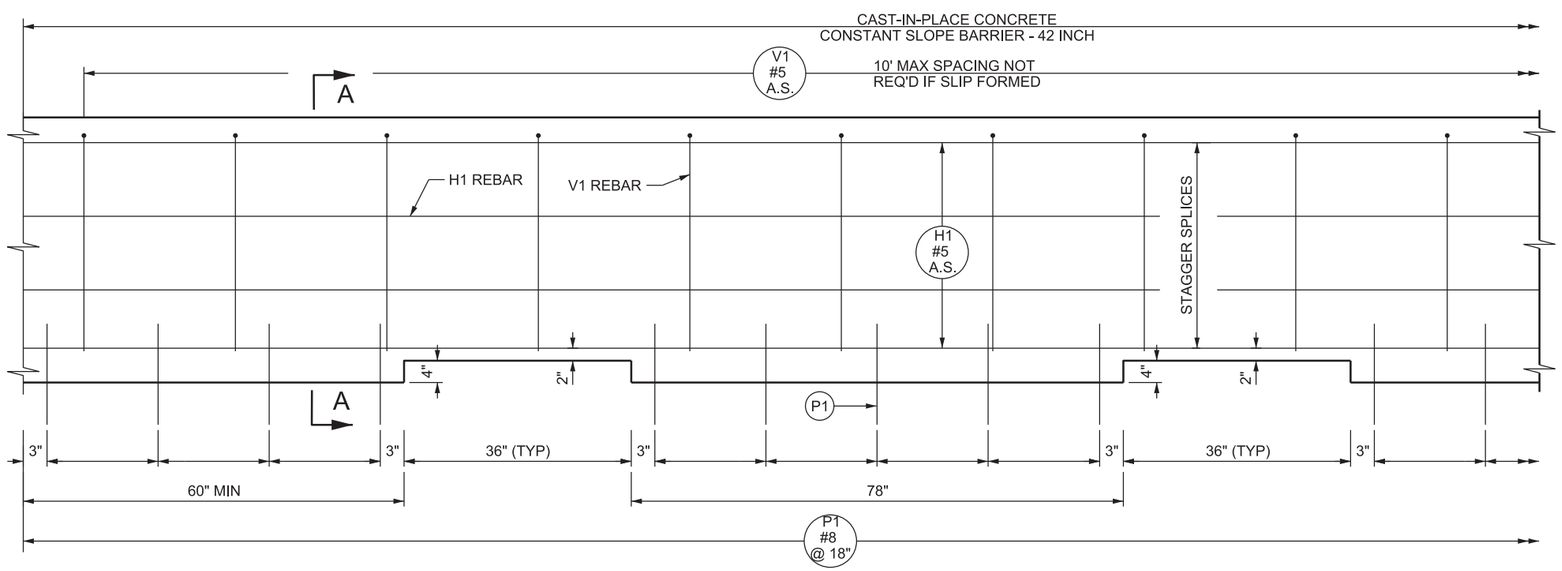


## ELEVATION

**NOTES:**

1. SEE "BARRIER CONNECTION DETAILS" ON STD DWG BA 1A2 FOR CONNECTION LOOP DETAILS.
2. DRILL AND EPOXY BOND P1 BARS OR HAND POSITION WHILE CONCRETE IS IN A WORKABLE FORM WHEN USING PCCP PAVEMENT.
3. SEE STD DWG BA 3A3 FOR REINFORCING STEEL SCHEDULE AND NOTES.
4. DO NOT USE BARRIER SEAL WHEN SCUPPERS ARE PRESENT ON BARRIER.
5. SEE STD DWG BA 3A2 FOR APPROACH AND TRAILING END TREATMENTS. NO EXPANSION JOINT REQUIRED.
6. SEE STD DWG BA 1A1 FOR GENERAL NOTES.

SUPPLEMENTAL DRAWING

REVISIONS

| NO. | DATE | APPR. | REMARKS |
|---|---|---|---|
| 1 | 08/29/19 | SDD | MODIFIED DESIGN ONLY NOTES TO CONSTRUCTION NOTES. |

**UTAH DEPARTMENT OF TRANSPORTATION**
STANDARD DRAWINGS FOR ROAD AND BRIDGE CONSTRUCTION
SALT LAKE CITY, UTAH

RECOMMENDED FOR APPROVAL — AUG. 29, 2019 DATE

CHAIRMAN STANDARDS COMMITTEE APPROVED — AUG. 29, 2019 DATE

DEPUTY DIRECTOR

CAST-IN-PLACE CONCRETE CONSTANT SLOPE BARRIER WITH SCUPPERS - 42 INCH

STANDARD DRAWING TITLE

STD. DWG. NO.
BA 3A4

DGN File:L:\Standard.Drawings\Imperial\2017 Approved_Supplemental.Issues\Suppl0 Approved August - 2019\Backup1\BA03A4.dgn
04-SEP-2019

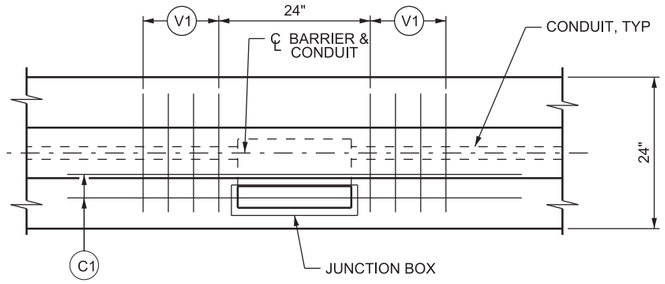


**PLAN**

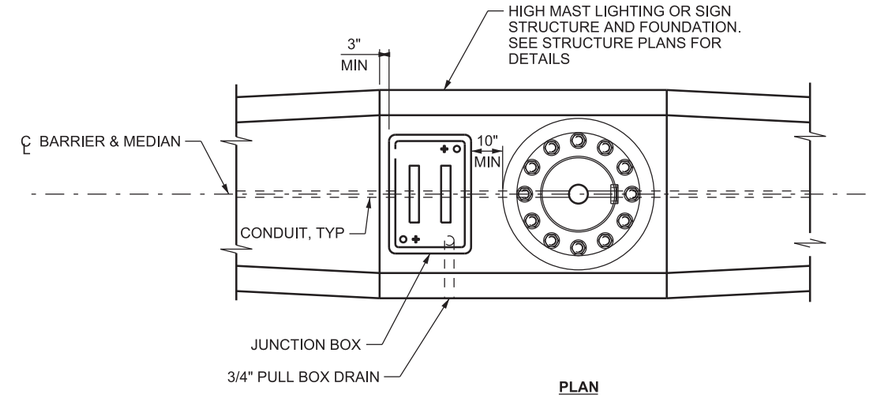


**PLAN**

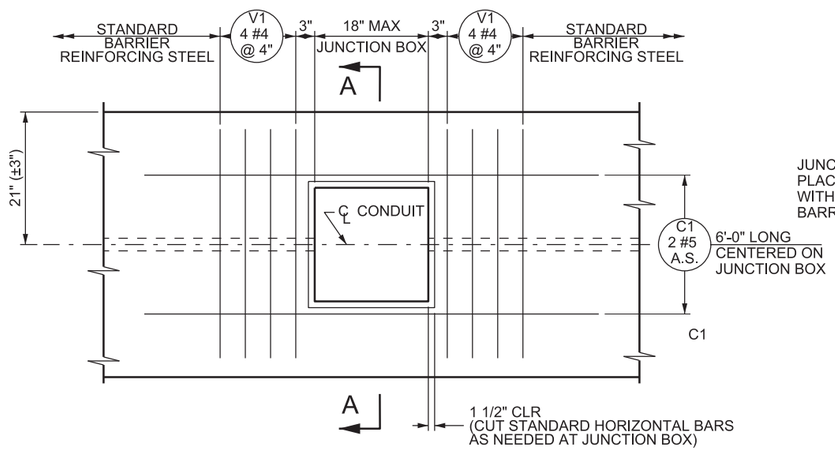


**ELEVATION**

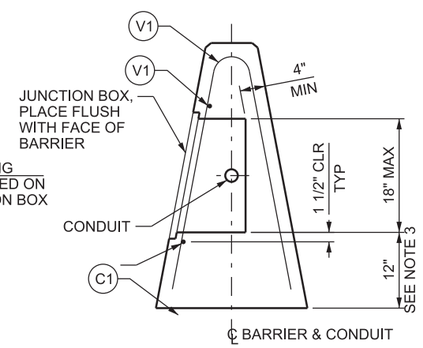


**SECTION A-A**

## MEDIAN BARRIER CONDUIT

STANDARD REINFORCING STEEL NOT SHOWN

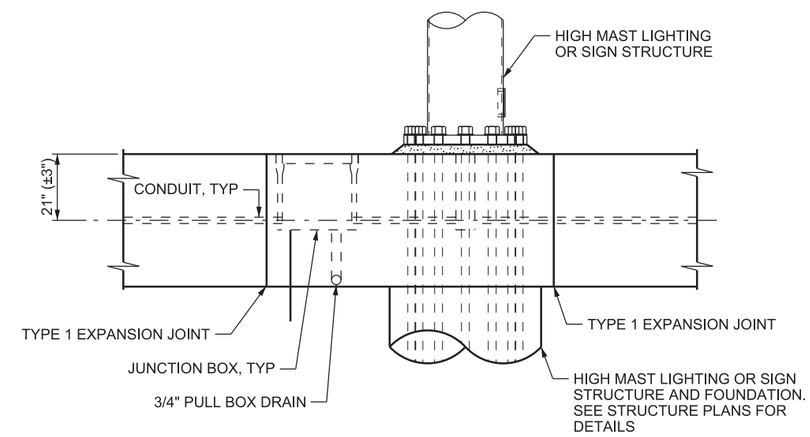


**ELEVATION**

## MEDIAN BARRIER CONDUIT AT SIGN OR LIGHT STRUCTURE

**NOTES:**

1. SEE STD DWG BA 1A1 FOR GENERAL NOTES.
2. INSTALL ELECTRICAL AND ATMS CONDUITS, JUNCTION BOXES, AND PULL BOXES PER CONTRACT DRAWINGS.
3. INCREASE HEIGHT TO ACCOUNT FOR STEPPED MEDIAN. MAINTAIN 12 INCHES TO TOP OF PAVEMENT ON THE HIGHEST SIDE.

SUPPLEMENTAL DRAWING

REVISIONS

| NO. | DATE | APPR. | REMARKS |
|---|---|---|---|
| 1 | 2/28/2019 | SDD | ADDED 3/4" PULL BOX DRAIN CALL OUT. |
| 2 | 08/29/19 | SDD | MODIFIED DESIGN ONLY NOTES TO CONSTRUCTION NOTES. |

**UTAH DEPARTMENT OF TRANSPORTATION**
STANDARD DRAWINGS FOR ROAD AND BRIDGE CONSTRUCTION
SALT LAKE CITY, UTAH

RECOMMENDED FOR APPROVAL — AUG. 29, 2019 DATE

CHAIRMAN STANDARDS COMMITTEE APPROVED — AUG. 29, 2019 DATE

DEPUTY DIRECTOR

CAST-IN-PLACE CONCRETE CONSTANT SLOPE BARRIER - 42 INCH, ELECTRICAL DETAILS

STANDARD DRAWING TITLE

STD. DWG. NO.
BA 3B

04-SEP-2019 DGN File:L:\Standard_Drawings\Imperial\2017 Approved_Supplemental_Issues\Suppl0 Approved August - 2019\Backup\BA03B.dgn

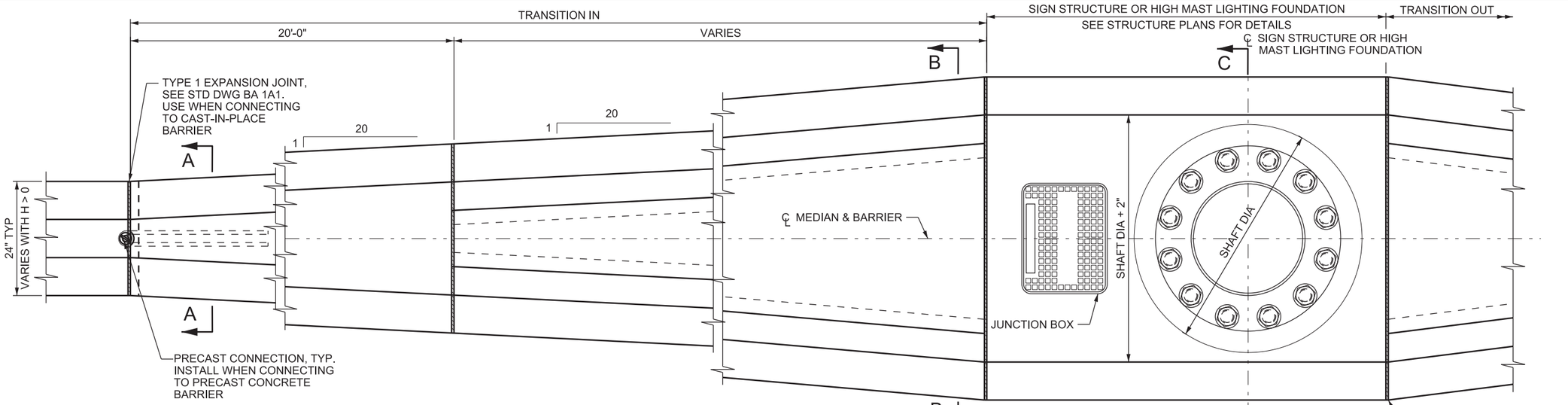


## PARTIAL PLAN

TRANSITION IN AND OUT ARE SYMMETRICAL ABOUT
SIGN STRUCTURE OR HIGH MAST LIGHTING FOUNDATION

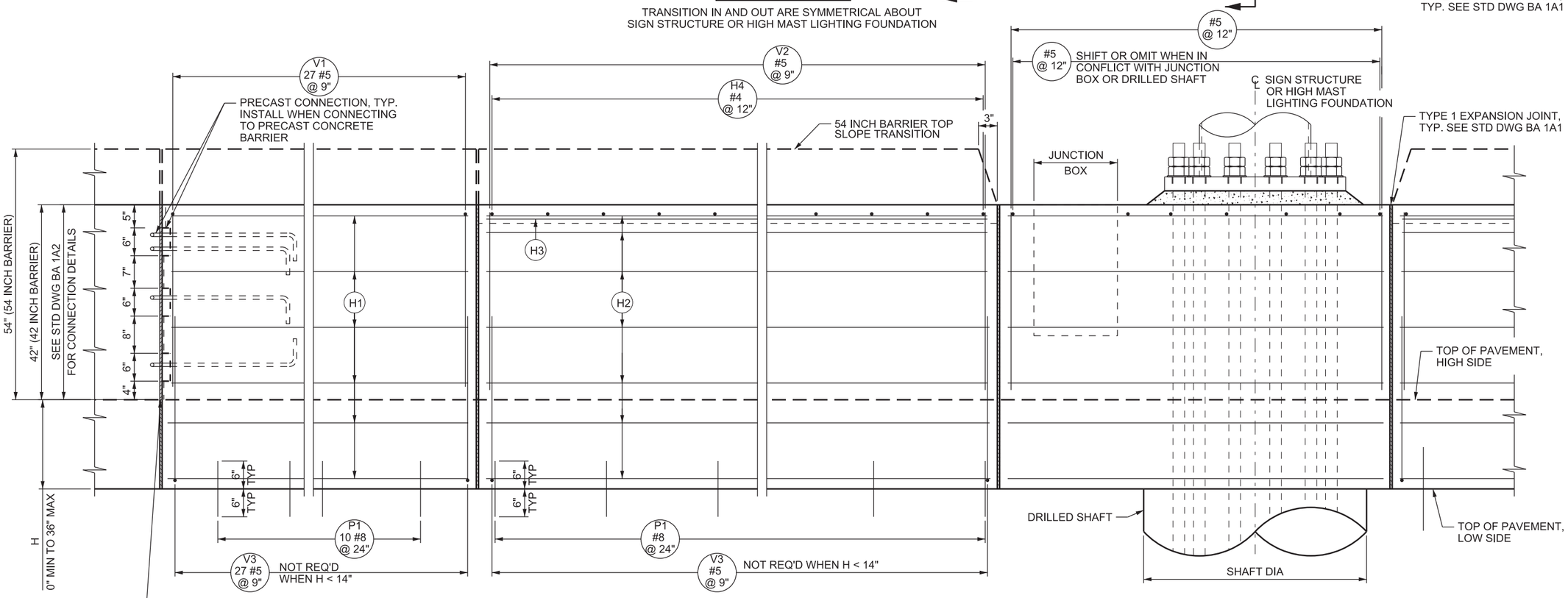


## PARTIAL ELEVATION

TRANSITION IN AND OUT ARE SYMMETRICAL ABOUT
SIGN STRUCTURE OR HIGH MAST LIGHTING FOUNDATION;
REINFORCING STEEL FOR 42 INCH BARRIER SHOWN, 54 INCH BARRIER SIMILAR

**NOTES:**

1. SEE STD DWG BA 1A1 FOR GENERAL NOTES.
2. SEE STD DWG BA 3C2 FOR SECTIONS AND REINFORCING STEEL SCHEDULE.
3. INSTALL ELECTRICAL AND ATMS CONDUITS, JUNCTION BOXES AND PULL BOXES ACCORDING TO CONTRACT DRAWINGS.
4. INCREASE LENGTH OF WIDTH TAPER AS NECESSARY TO PROVIDE APPROPRIATE FLARE RATE WHEN DESIGN PLANS SPECIFY ALTERNATIVE FLARE RATE. ADJUST REINFORCING STEEL LENGTHS AS NECESSARY.

SUPPLEMENTAL DRAWING

REVISIONS

| NO. | DATE | APPR. | REMARKS |
|---|---|---|---|
| 1 | 08/29/19 | SDD | MOVED DESIGN ONLY NOTES TO RDM SHEETS. |

**UTAH DEPARTMENT OF TRANSPORTATION**
STANDARD DRAWINGS FOR ROAD AND BRIDGE CONSTRUCTION
SALT LAKE CITY, UTAH

RECOMMENDED FOR APPROVAL — AUG. 29, 2019 DATE

CHAIRMAN STANDARDS COMMITTEE APPROVED — AUG. 29, 2019 DATE

DEPUTY DIRECTOR

CAST-IN-PLACE CONCRETE CONSTANT SLOPE BARRIER - 42 INCH, SIGN STRUCTURE FOUNDATION TRANSITION 1 OF 2

STANDARD DRAWING TITLE

STD. DWG. NO.
BA 3C1

04-SEP-2019 DGN File:L:\Standard_Drawings\Imperial\2017 Approved_Supplemental_Issues\Suppl0 Approved August - 2019\Backup\BA03C1.dgn

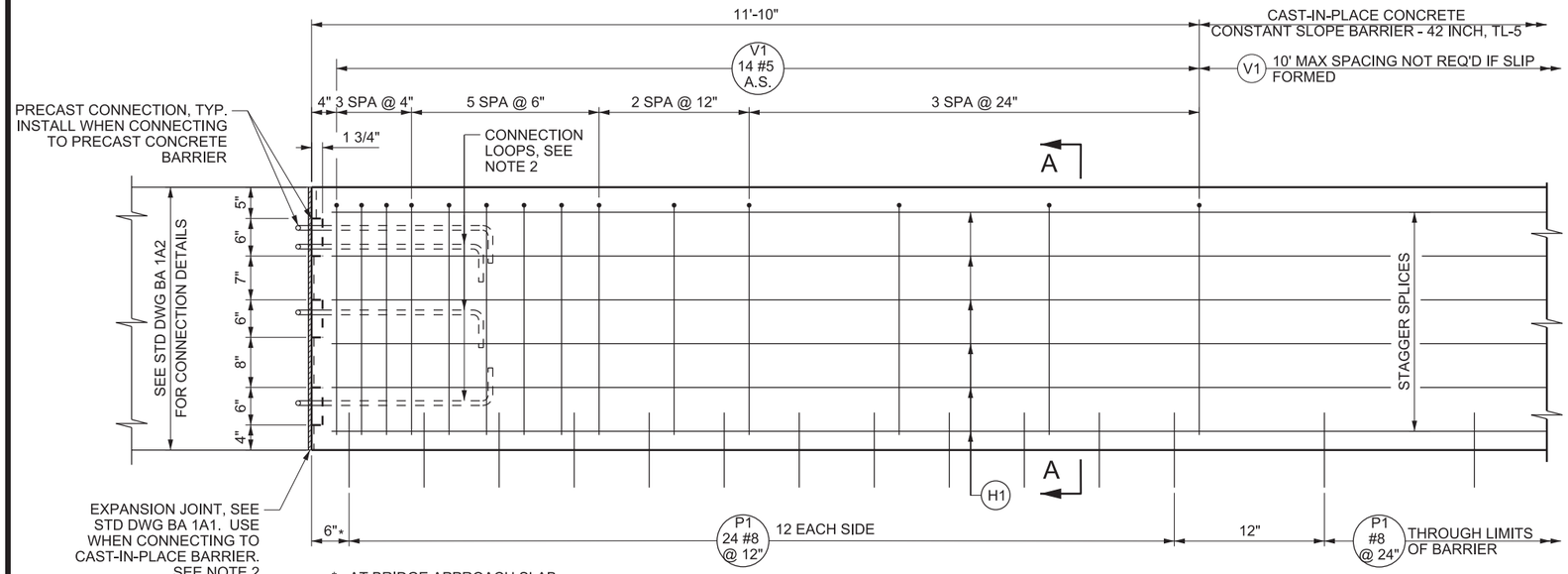


## ELEVATION

BARRIER ON PCCP

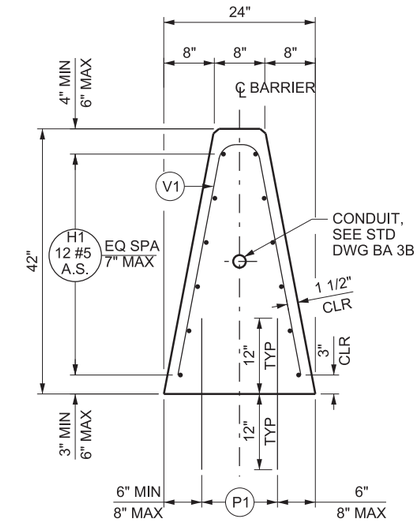


## SECTION A-A

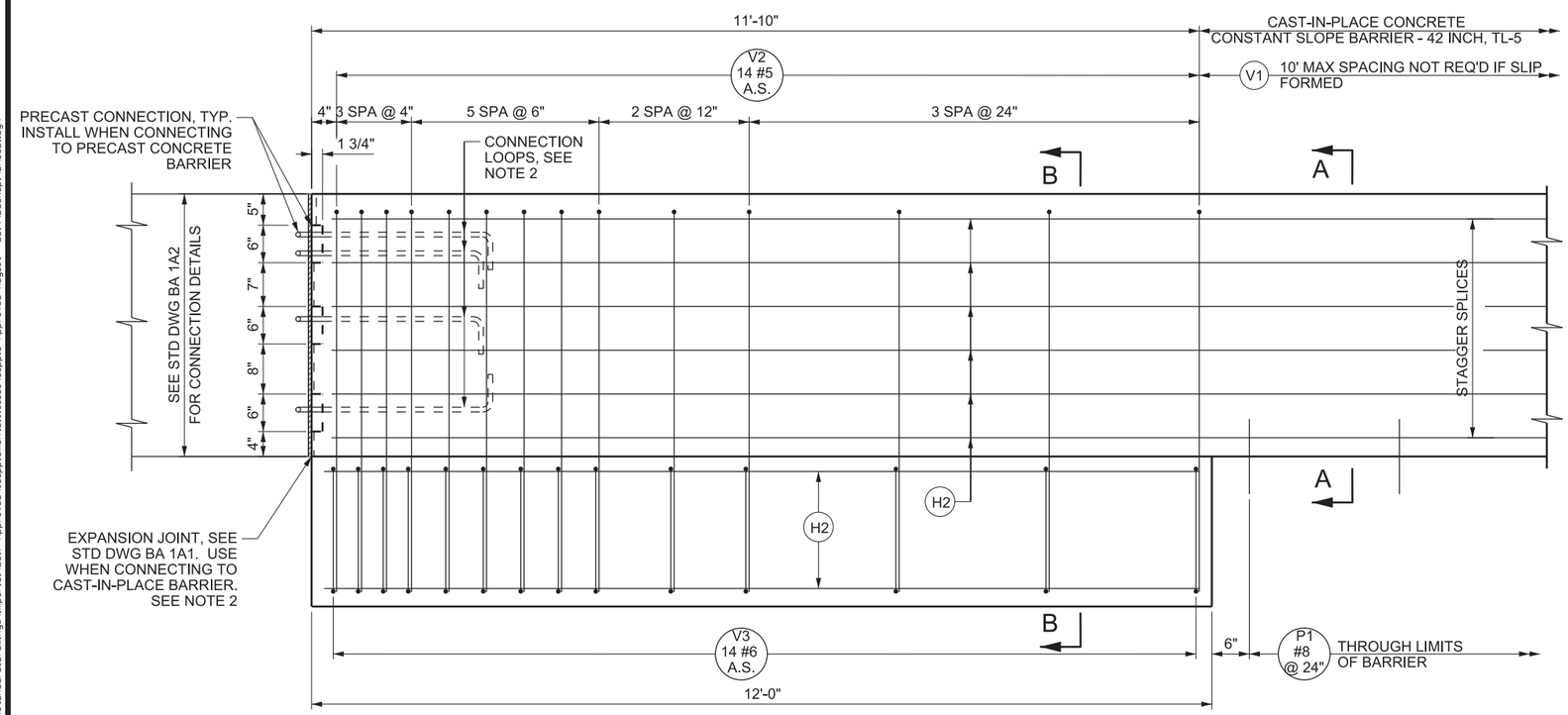


## ELEVATION

BARRIER ON HMA

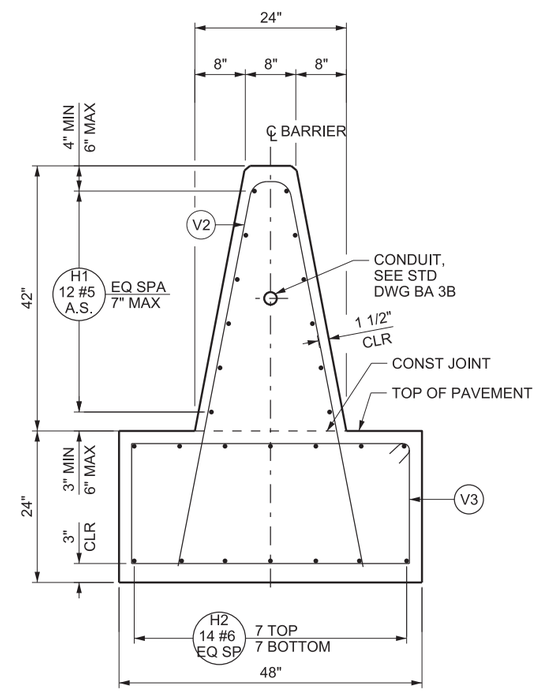


## SECTION B-B

**NOTES:**

1. SEE STD DWG BA 1A1 FOR GENERAL NOTES.
2. SEE "BARRIER CONNECTION DETAILS" ON STD DWG BA 1A2 FOR CONNECTION LOOP DETAILS.
3. SEE STD DWG BA 3E2 FOR STEPPED MEDIAN DETAILS AND REINFORCING STEEL SCHEDULE.
4. SEE STD DWG BA 3A2 FOR APPROACH AND TRAILING END TREATMENTS. NO EXPANSION JOINT REQUIRED.

SUPPLEMENTAL DRAWING

REVISIONS

| NO. | DATE | APPR. | REMARKS |
|---|---|---|---|
| 1 | 08/29/19 | SDD | MOVED DESIGN ONLY NOTES TO RDM SHEETS. |

**UTAH DEPARTMENT OF TRANSPORTATION**
STANDARD DRAWINGS FOR ROAD AND BRIDGE CONSTRUCTION
SALT LAKE CITY, UTAH

RECOMMENDED FOR APPROVAL — AUG. 29, 2019 DATE
CHAIRMAN STANDARDS COMMITTEE APPROVED — AUG. 29, 2019 DATE
DEPUTY DIRECTOR

CAST-IN-PLACE CONCRETE CONSTANT SLOPE BARRIER - 42 INCH, TL-5 1 OF 2

STANDARD DRAWING TITLE

STD. DWG. NO.
BA 3E1

DGN File:L:\Standard_Drawings\Imperial\2017 Approved_Supplemental_Issues\Suppl0 Approved August - 2019\Backup1\BA03E1.dgn
04-SEP-2019

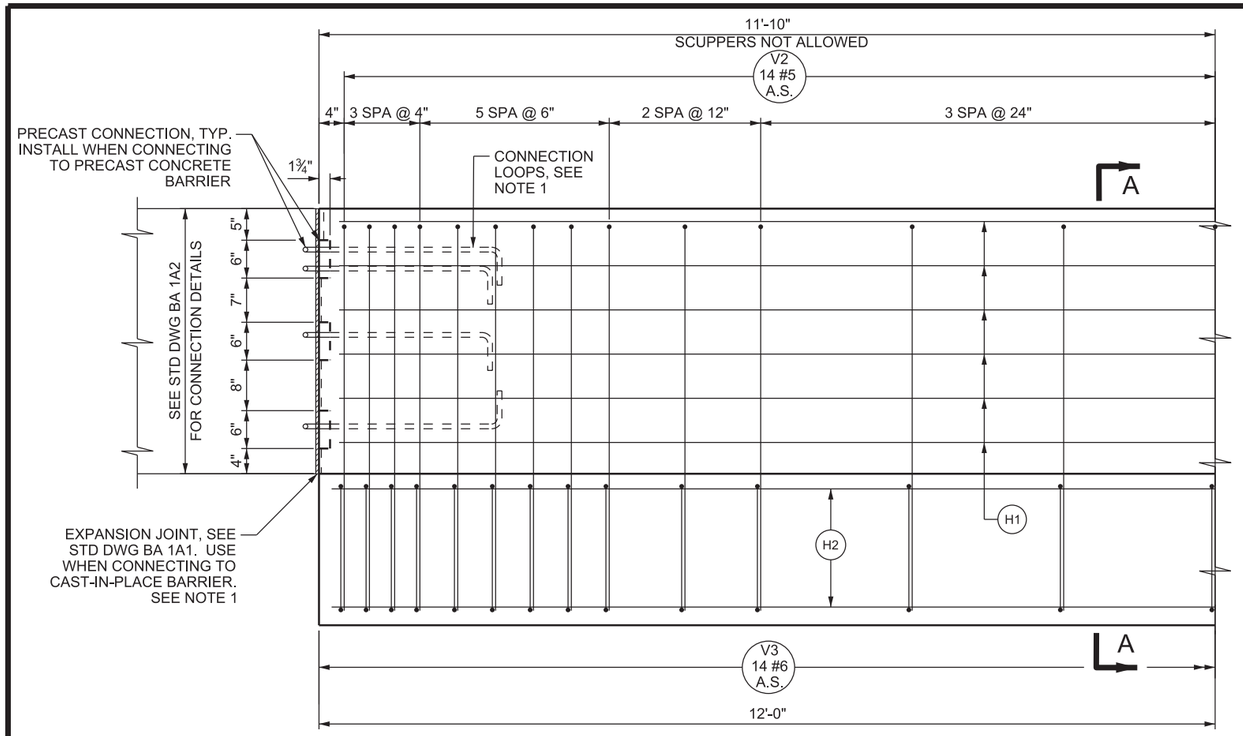


## ELEVATION

BARRIER ON HMA SHOWN
SEE BA 3E1 FOR BARRIER ON PCCP

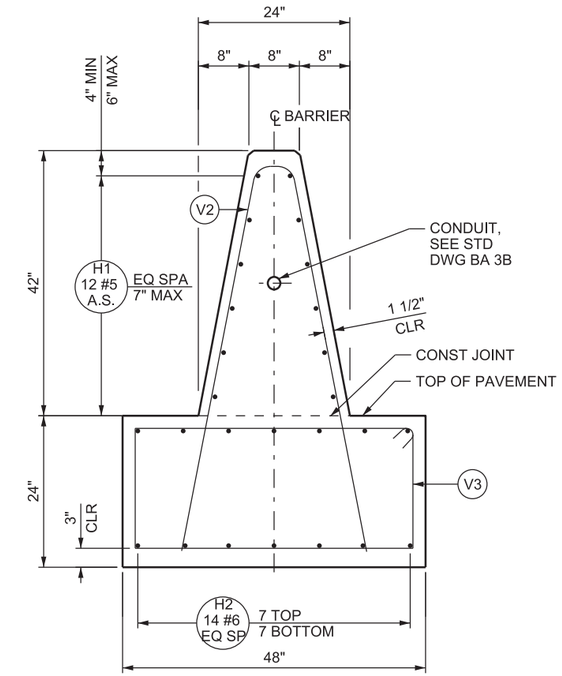


## SECTION A-A

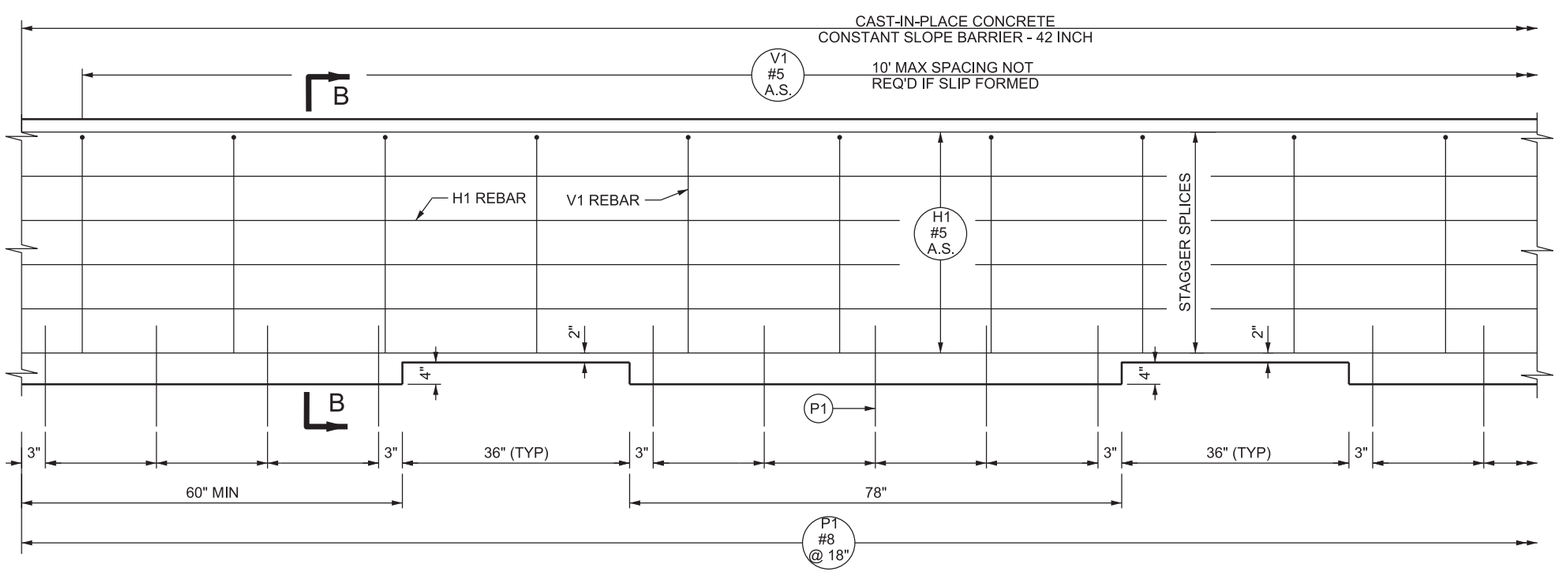


## ELEVATION

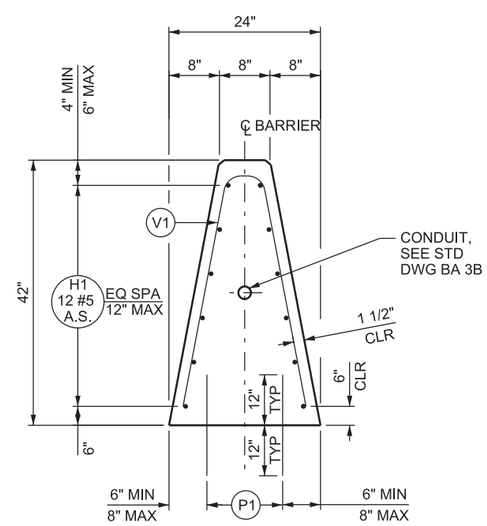


## SECTION B-B

**NOTES:**

1. SEE "BARRIER CONNECTION DETAILS" ON STD DWG BA 1A2 FOR CONNECTION LOOP DETAILS.
2. DRILL AND EPOXY BOND P1 BARS OR HAND POSITION WHILE CONCRETE IS IN A WORKABLE FORM WHEN USING PCCP PAVEMENT.
3. SEE STD DWG BA 3E2 FOR REINFORCING STEEL SCHEDULE AND NOTES.
4. DO NOT USE BARRIER SEAL WHEN SCUPPERS ARE PRESENT ON BARRIER.
5. SEE STD DWG BA 3A2 FOR APPROACH AND TRAILING END TREATMENTS. NO EXPANSION JOINT REQUIRED.
6. SEE STD DWG BA 1A1 FOR GENERAL NOTES.

SUPPLEMENTAL DRAWING

REVISIONS

| NO. | DATE | APPR. | REMARKS |
|---|---|---|---|
| 1 | 08/29/19 | SDD | MOVED DESIGN ONLY NOTES TO RDM SHEETS. |

**UTAH DEPARTMENT OF TRANSPORTATION**
STANDARD DRAWINGS FOR ROAD AND BRIDGE CONSTRUCTION
SALT LAKE CITY, UTAH

RECOMMENDED FOR APPROVAL — AUG. 29, 2019 DATE
CHAIRMAN STANDARDS COMMITTEE APPROVED — AUG. 29, 2019 DATE
DEPUTY DIRECTOR

CAST-IN-PLACE CONCRETE CONSTANT SLOPE BARRIER WITH SCUPPERS - 42 INCH, TL-5
STANDARD DRAWING TITLE

STD. DWG. NO.
BA 3E3

04-SEP-2019 DGN File:L:\Standard_Drawings\Imperial\2017 Approved_Supplemental_Issues\Suppl0 Approved August - 2019\Backup\BA03E3.dgn

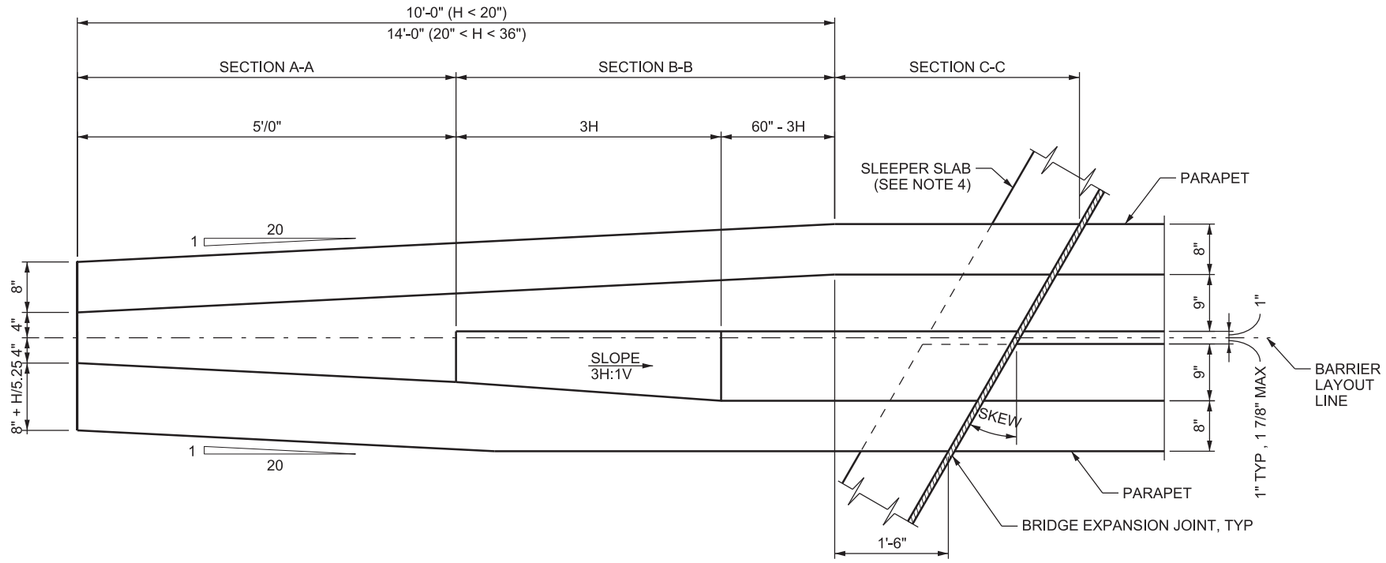


## PLAN - SKEW < 30°

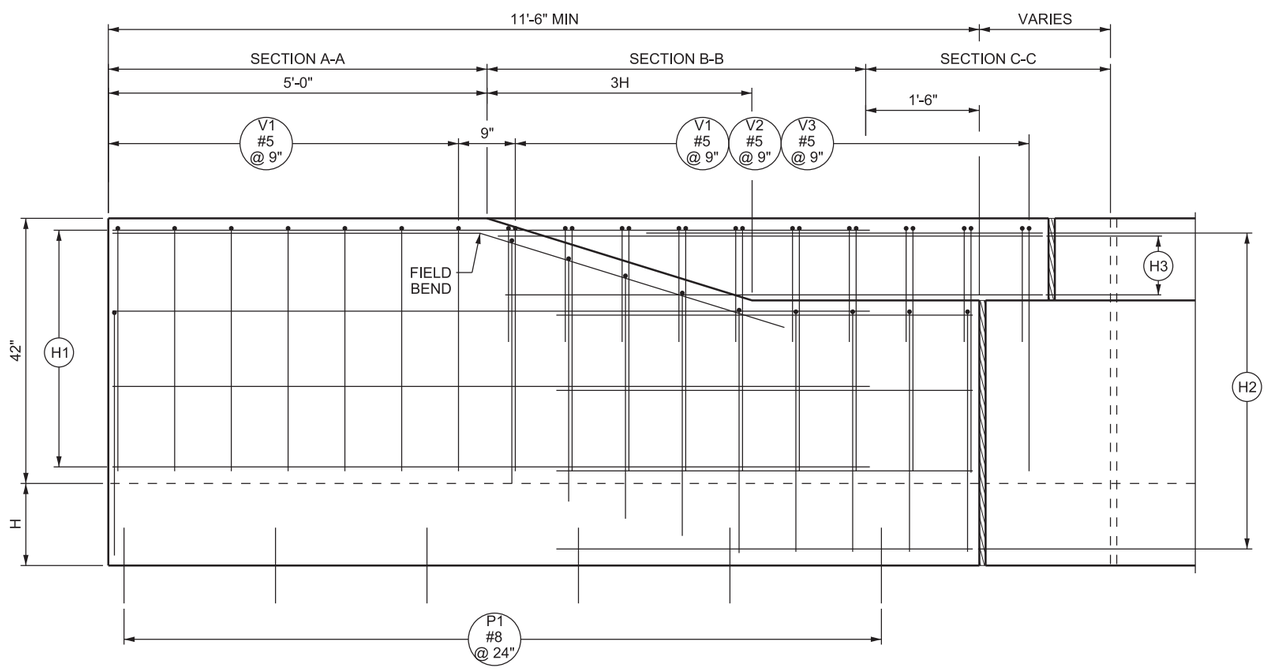


## ELEVATION - SKEW < 30°

**NOTES**

1. SEE STD DWG BA 1A1 FOR GENERAL NOTES.
2. SEE STD DWG BA 3F3 FOR SECTIONS AND REINFORCING STEEL SCHEDULE.
3. SLEEPER SLAB ENDS AT FACE OF PARAPET FOR H GREATER THAN 14 INCHES.

SUPPLEMENTAL DRAWING

REVISIONS

| NO. | DATE | APPR. | REMARKS |
|---|---|---|---|
| 1 | 08/29/19 | SDD | MOVED DESIGN ONLY NOTE TO NOTES. |

**UTAH DEPARTMENT OF TRANSPORTATION**
STANDARD DRAWINGS FOR ROAD AND BRIDGE CONSTRUCTION
SALT LAKE CITY, UTAH

RECOMMENDED FOR APPROVAL — AUG. 29, 2019 DATE

CHAIRMAN STANDARDS COMMITTEE APPROVED — AUG. 29, 2019 DATE

DEPUTY DIRECTOR

CAST-IN-PLACE CONCRETE
CONSTANT SLOPE BARRIER
- 42 INCH, BRIDGE
PARAPET TRANSITION
1 OF 3

STANDARD DRAWING TITLE

STD. DWG. NO.
BA 3F1

DGN File:L:\Standard.Drawings\Imperial\2017 Approved_Supplemental.Issues\Suppl0 Approved August - 2019\Backup\BA03F1.dgn
04-SEP-2019

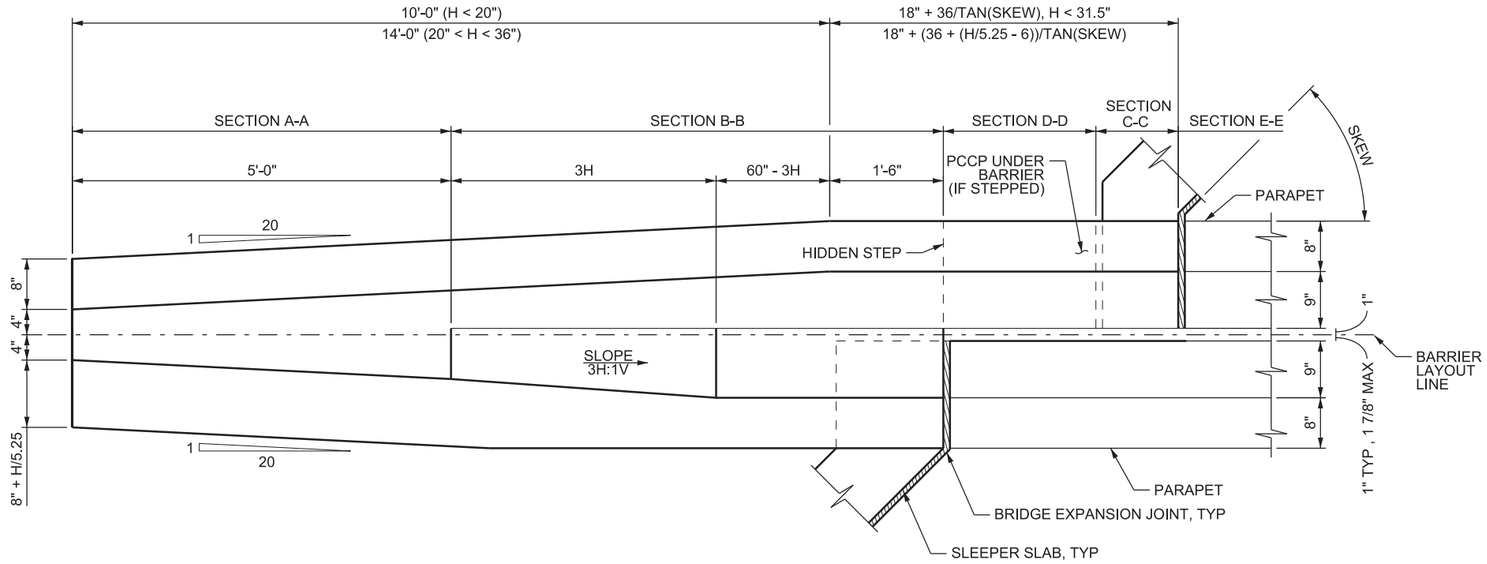


## PLAN - H < 36 INCH, 30° < SKEW < 45°

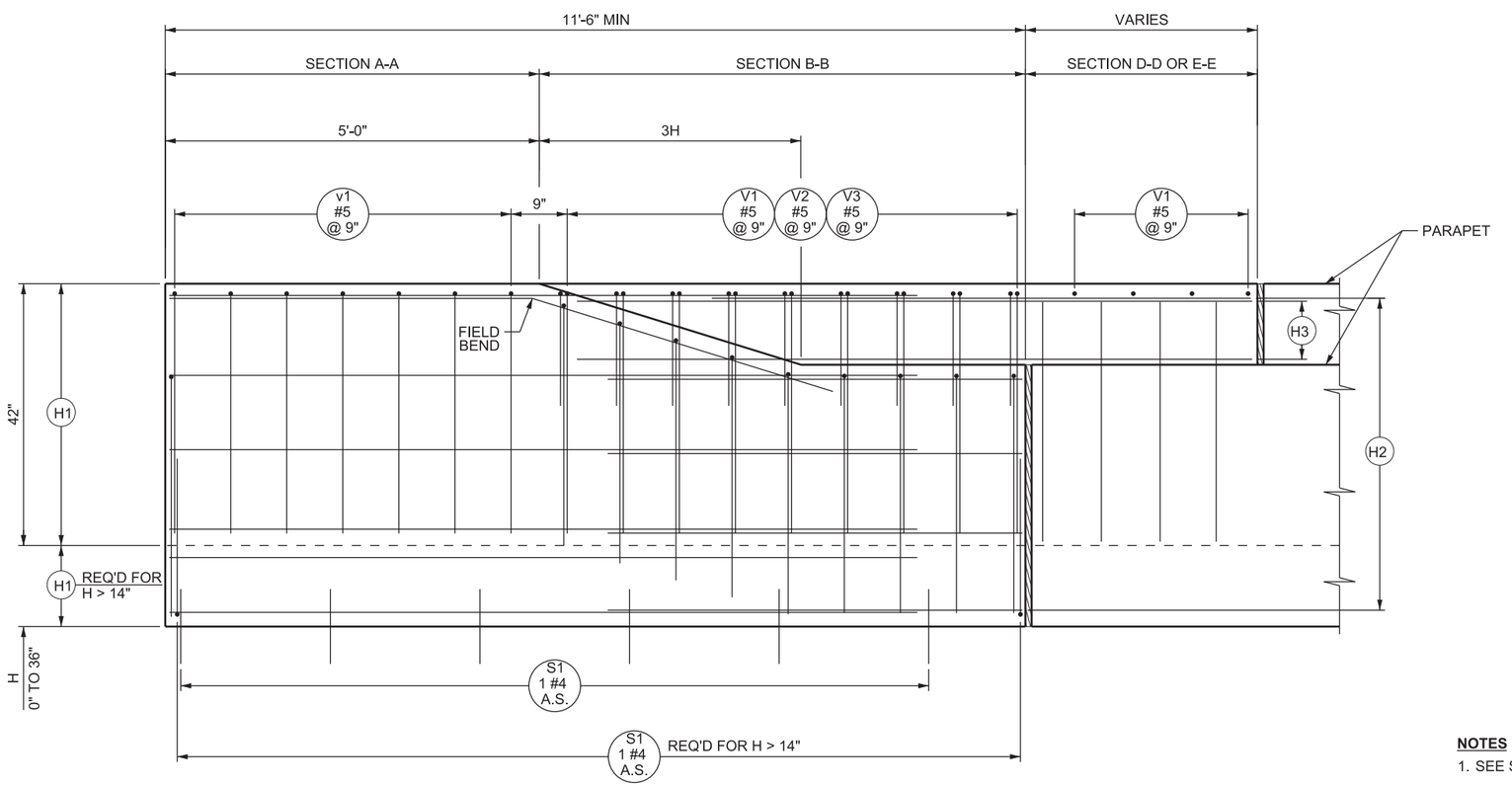


## ELEVATION - H < 36 INCH, 30° < SKEW < 45°

**NOTES**

1. SEE STD DWG BA 1A1 FOR GENERAL NOTES.
2. SEE STD DWG BA 3F3 FOR SECTIONS AND REINFORCING STEEL SCHEDULE.

SUPPLEMENTAL DRAWING

REVISIONS

| NO. | DATE | APPR. | REMARKS |
|---|---|---|---|
| 1 | 08/29/19 | SDD | MOVED DESIGN ONLY NOTE TO NOTES. |

**UTAH DEPARTMENT OF TRANSPORTATION**
STANDARD DRAWINGS FOR ROAD AND BRIDGE CONSTRUCTION
SALT LAKE CITY, UTAH

RECOMMENDED FOR APPROVAL — AUG. 29, 2019 DATE
CHAIRMAN STANDARDS COMMITTEE APPROVED — AUG. 29, 2019 DATE
DEPUTY DIRECTOR

CAST-IN-PLACE CONCRETE CONSTANT SLOPE BARRIER - 42 INCH, BRIDGE PARAPET TRANSITION 2 OF 3

STANDARD DRAWING TITLE

STD. DWG. NO.
BA 3F2

DGN File:L:\Standard.Drawings\Imperial\2017 Approved_Supplemental.Issues\Suppl0 Approved August - 2019\Backup\BA03F2.dgn
04-SEP-2019

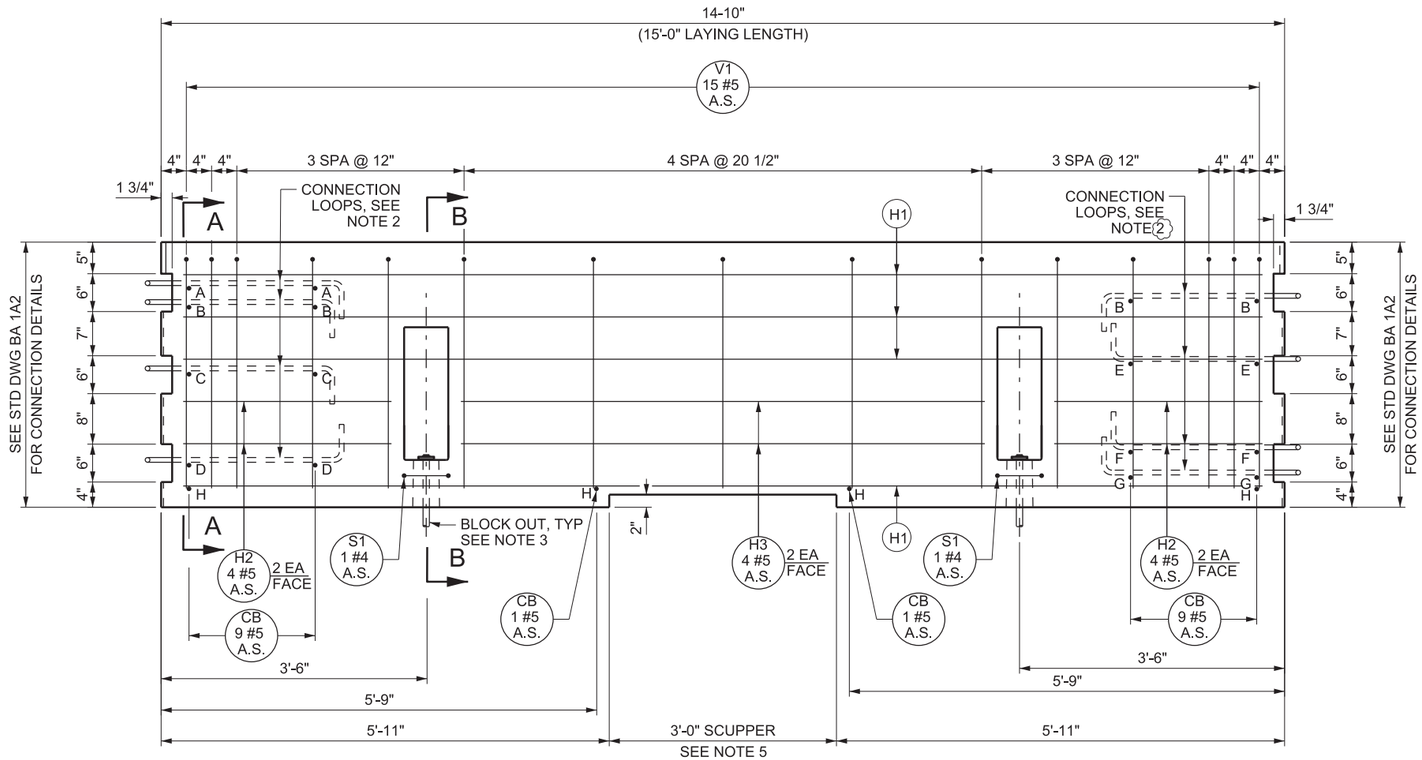


## ELEVATION

| BAR MARK | BAR SIZE | NO. BARS | LOCATION | SKETCH |
|---|---|---|---|---|
| H1 | #5 | 9 | HORIZONTAL IN BARRIER TIED INSIDE V1 BARS | 14'-3" |
| H2 | #5 | 8 | HORIZONTAL IN BARRIER TIED INSIDE V1 BARS | 2'-9" |
| H3 | #5 | 4 | HORIZONTAL IN BARRIER TIED INSIDE V1 BARS | 7'-0" |
| S1 | #4 | 2 | HORIZONTAL AROUND BARRIER STABILIZATION SLOTS<br><br>TOTAL LENGTH = 5'-7" | 20 1/4"; 7 1/4"; BLOCK OUTS; 1 1/2" R, TYP; 12" |
| CB | #4 | 20 | CROSS BARS (CB) TIED TO V1 BARS | L<br>* NOT REQUIRED WITH V1 OPTION 2 BARS |
| V1 | #5 | 15 | VERTICAL IN BARRIER<br><br>TOTAL LENGTH:<br>OPTION 1 = 6'-10 1/2"<br>OPTION 2 = 7'-11" | OPTION 1: 36 1/2"; 2 3/4"; 22°; 34 7/8" TYP; 19 1/2"<br>OPTION 2: 37"; 22°; 79°, 79°; 37 3/4" TYP; 19 1/2" |

| ID | L | QTY |
|---|---|---|
| A | 7 1/2" | 2 |
| B | 8 1/2" | 4 |
| C | 13" | 2 |
| D | 18 1/2" | 2 |
| E | 12" | 2 |
| F | 17 1/2" | 2 |
| G | 19" | 2 |
| H* | 19 1/2" | 4 |

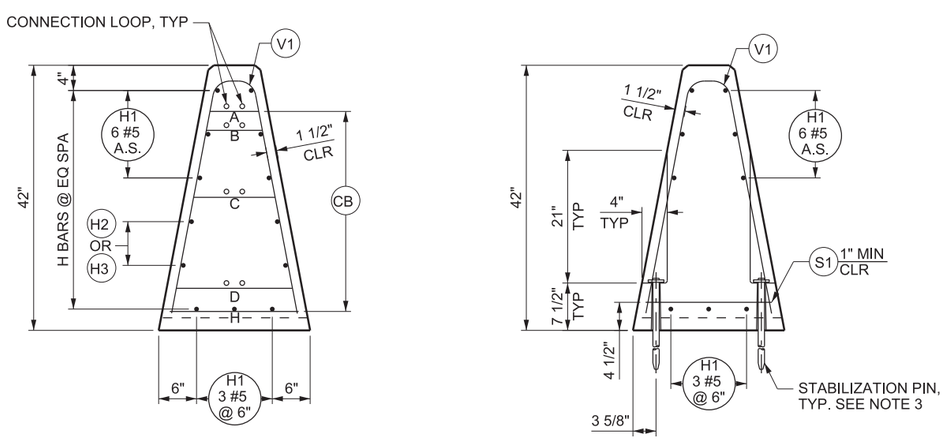


## SECTION A-A

## SECTION B-B

**NOTES:**

1. SEE STD DWG BA 1A1 AND BA 1A2 FOR GENERAL NOTES.
2. SEE "BARRIER CONNECTION DETAILS" ON STD DWG BA 1A2 FOR CONNECTION LOOP DETAILS.
3. SEE "BARRIER BLOCK OUT AND STABILIZATION PIN" ON STD DWG BA 1A2 FOR DETAILS.
4. PROVIDE SCUPPERS WHEN NOTED ON PLANS. DO NOT USE BARRIER SEAL WHEN SCUPPERS ARE PRESENT ON BARRIER.
5. DO NOT USE BARRIER SEAL WHEN SCUPPERS ARE PRESENT ON BARRIER.
6. EACH BARRIER UNIT WEIGHS 5.2 TONS.

SUPPLEMENTAL DRAWING

REVISIONS

| NO. | DATE | APPR. | REMARKS |
|---|---|---|---|
| 1 | 08/29/19 | SDD | MODIFIED DESIGN ONLY NOTES TO NOTES. |

**UTAH DEPARTMENT OF TRANSPORTATION**
STANDARD DRAWINGS FOR ROAD AND BRIDGE CONSTRUCTION
SALT LAKE CITY, UTAH

RECOMMENDED FOR APPROVAL — AUG. 29, 2019 DATE
CHAIRMAN STANDARDS COMMITTEE APPROVED — AUG. 29, 2019 DATE
DEPUTY DIRECTOR — DATE

PRECAST CONCRETE CONSTANT SLOPE BARRIER - 42 INCH

STANDARD DRAWING TITLE

STD. DWG. NO.
BA 3G

DGN File:L:\Standard.Drawings\Imperial\2017 Approved_Supplemental.Issues\Suppl0 Approved August - 2019\Backup1\BA03G.dgn
04-SEP-2019

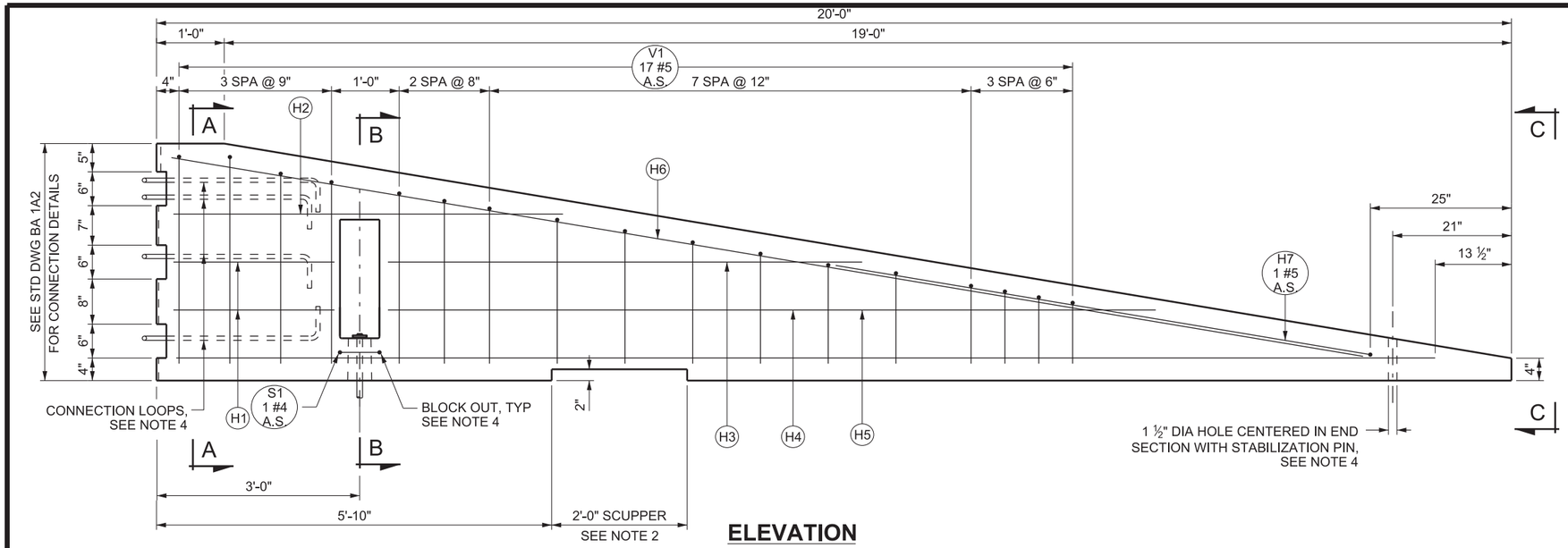


## ELEVATION

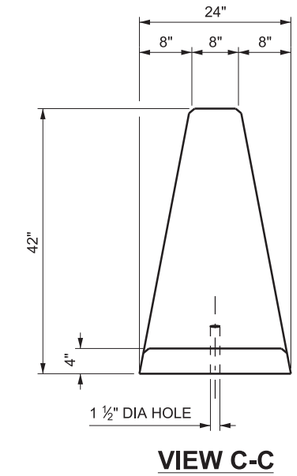


## VIEW C-C

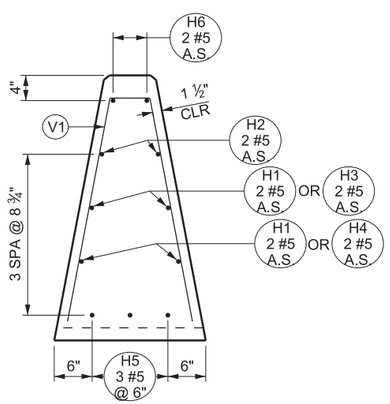


## SECTION A-A

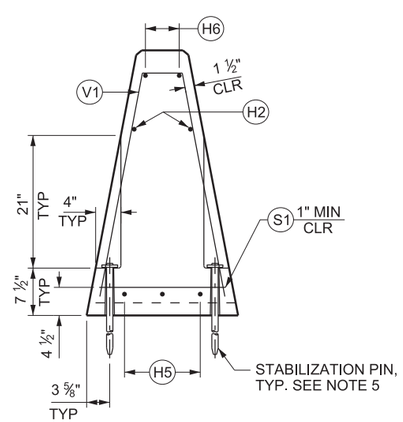


## SECTION B-B

| BAR MARK | BAR SIZE | NO. BARS | LOCATION | SKETCH |
|---|---|---|---|---|
| H1 | #5 | 4 | HORIZONTAL IN BARRIER TIED INSIDE V1 BARS | 2'-4" |
| H2 | #5 | 2 | HORIZONTAL IN BARRIER TIED INSIDE V1 BARS | 5'-9" |
| H3 | #5 | 2 | HORIZONTAL IN BARRIER TIED INSIDE V1 BARS | 7'-0" |
| H4 | #5 | 2 | HORIZONTAL IN BARRIER TIED INSIDE V1 BARS | 11'-4" |
| H5 | #5 | 3 | HORIZONTAL IN BARRIER TIED INSIDE V1 BARS | 18'-7" |
| H6 | #5 | 2 | HORIZONTAL IN BARRIER TIED INSIDE V1 BARS | 17'-10" |
| H7 | #5 | 1 | HORIZONTAL IN BARRIER ALONG TOP SLOPE<br>TOTAL LENGTH = 17'-7 1/2" | 8'-0" TYP<br>19 ½" |
| S1 | #4 | 1 | HORIZONTAL AROUND BARRIER STABILIZATION SLOTS<br>TOTAL LENGTH = 5'-7" | 20 ¼"<br>7 ¼"<br>BLOCK OUTS<br>1 ½" R, TYP<br>12" |
| V1 | #5 | 17 | VERTICAL IN BARRIER | |

| H | W1 | W2 | QTY |
|---|---|---|---|
| 37" | 7" | 5 ½" | 2 |
| 35 ½" | 6 ½" | 6 ½" | 1 |
| 34" | 6 ½" | 6 ½" | 1 |
| 32 ½" | 6" | 7 ½" | 1 |
| 30 ½" | 5 ½" | 8 ½" | 1 |
| 29" | 5 ½" | 8 ½" | 1 |
| 27" | 5" | 9 ½" | 1 |
| 25" | 4 ½" | 10 ½" | 1 |
| 23" | 4" | 11 ½" | 1 |
| 21" | 4" | 11 ½" | 1 |
| 19" | 3 ½" | 12 ½" | 1 |
| 17" | 3" | 13 ½" | 1 |
| 15" | 2 ½" | 14 ½" | 1 |
| 14" | 2 ½" | 14 ½" | 1 |
| 13" | 2" | 15 ½" | 1 |
| 12" | 2" | 15 ½" | 1 |

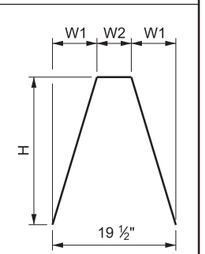


**NOTES:**

1. SEE STD DWG BA 1A1 AND BA 1A2 FOR GENERAL NOTES.
2. PROVIDE SCUPPERS WHEN NOTED ON PLANS. DO NOT USE BARRIER SEAL WHEN SCUPPERS ARE PRESENT ON BARRIER.
3. SEE "BARRIER CONNECTION DETAILS" ON STD DWG BA 1A2 FOR CONNECTION LOOP DETAILS.
4. SEE "BARRIER BLOCK OUT AND STABILIZATION PIN" ON STD DWG BA 1A2 FOR DETAILS. XX
5. INSTALL STABILIZATION PINS IN ALL APPLICATIONS.
6. EACH BARRIER UNIT WEIGHS 4.0 TONS.

SUPPLEMENTAL DRAWING

REVISIONS

| NO. | DATE | APPR. | REMARKS |
|---|---|---|---|
| 1 | 08/29/19 | SDD | MODIFIED DESIGN ONLY NOTES TO NOTES. |

**UTAH DEPARTMENT OF TRANSPORTATION**
STANDARD DRAWINGS FOR ROAD AND BRIDGE CONSTRUCTION
SALT LAKE CITY, UTAH

RECOMMENDED FOR APPROVAL — AUG. 29, 2019 DATE
CHAIRMAN STANDARDS COMMITTEE APPROVED — AUG. 29, 2019 DATE
DEPUTY DIRECTOR

PRECAST CONCRETE CONSTANT SLOPE BARRIER - 42 INCH, SLOPED END SECTION (FOR SPEEDS ≤ 40 MPH)

STANDARD DRAWING TITLE

STD. DWG. NO.
BA 3H

04-SEP-2019 DGN File:L:\Standard.Drawings\Imperial\2017 Approved_Supplemental.Issues\Suppl0 Approved August - 2019\Backup1\BA03H.dgn

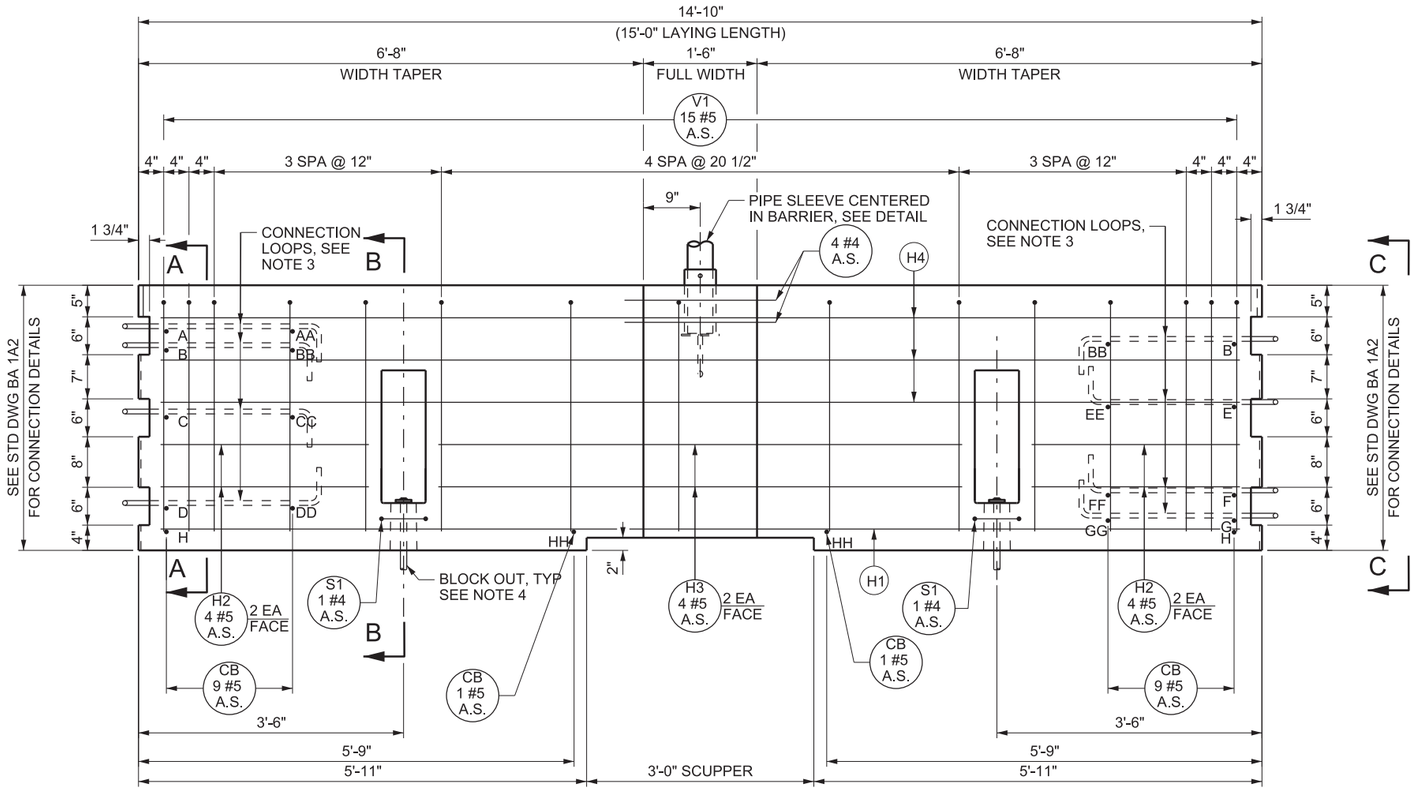


## ELEVATION

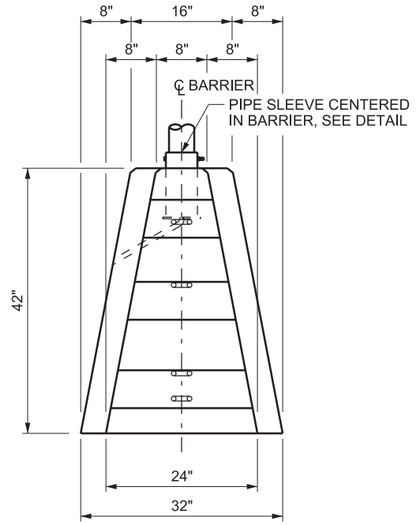


## VIEW C-C

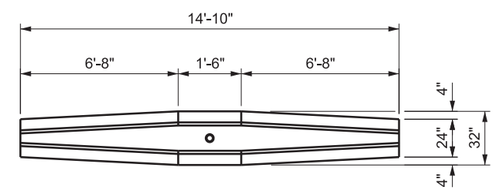


## PLAN

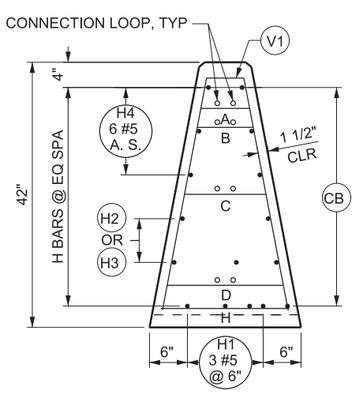


## SECTION A-A

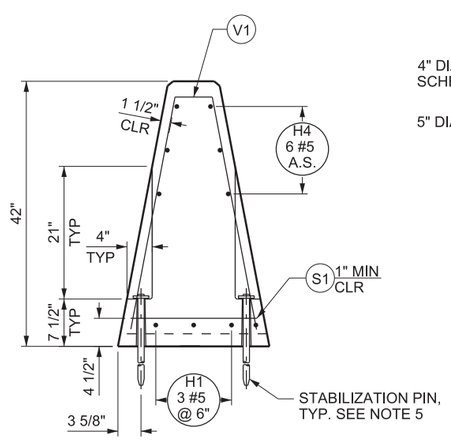


## SECTION B-B

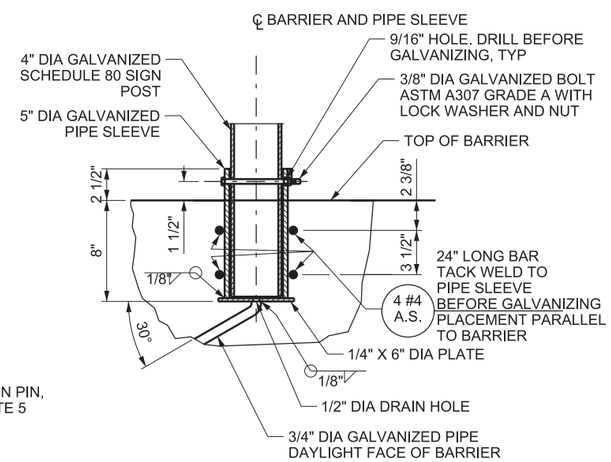


## PIPE SLEEVE DETAIL

**NOTES:**

1. SEE STD DWG BA 1A1 AND BA 1A2 FOR GENERAL NOTES.
2. SEE DESIGN PLAN SET WHEN BARRIER SECTIONS WITH SCUPPERS ARE REQUIRED. DO NOT USE BARRIER SEAL WHEN SCUPPERS ARE PRESENT ON BARRIER.
3. SEE "BARRIER CONNECTION DETAILS" ON STD DWG BA 1A2 FOR CONNECTION LOOP DETAILS.
4. SEE "BARRIER BLOCK OUT AND STABILIZATION PIN" ON STD DWG BA 1A2 FOR DETAILS.
5. SEE SN SERIES STD DWG FOR SIGN MOUNTING, HARDWARE, AND PLACEMENT REQUIREMENTS. MAXIMUM SIGN PANEL AREA IS 36 SQ FT.
6. USE PIPES CONFORMING TO ASTM A 53 GRADE B, ASTM A 500 GRADE B, OR ASTM API 5L GRADE B/X42. GALVANIZE IN ACCORDANCE WITH ASTM A 123 AFTER FABRICATION IS COMPLETED.
7. SEE STD DWG BA 3I2 FOR REINFORCING STEEL SCHEDULE.
8. EACH BARRIER UNIT WEIGHS 6.6 TONS.

SUPPLEMENTAL DRAWING

REVISIONS

| NO. | DATE | APPR. | REMARKS |
|---|---|---|---|
| 1 | 08/29/19 | SDD | MODIFIED DESIGN ONLY NOTES TO NOTES. |

**UTAH DEPARTMENT OF TRANSPORTATION**
STANDARD DRAWINGS FOR ROAD AND BRIDGE CONSTRUCTION
SALT LAKE CITY, UTAH

RECOMMENDED FOR APPROVAL — AUG.29, 2019 DATE
CHAIRMAN STANDARDS COMMITTEE APPROVED — AUG.29, 2019 DATE
DEPUTY DIRECTOR — DATE

PRECAST
CONCRETE CONSTANT
SLOPE BARRIER - 42 INCH,
MEDIAN SMALL SIGN
SECTION
1 OF 2

STANDARD DRAWING TITLE

STD. DWG. NO.
BA 3I1

04-SEP-2019 DGN File:L:\Standard_Drawings\Imperial\2017 Approved_Supplemental_Issues\Suppl0 Approved August - 2019\Backup\BA03I1.dgn

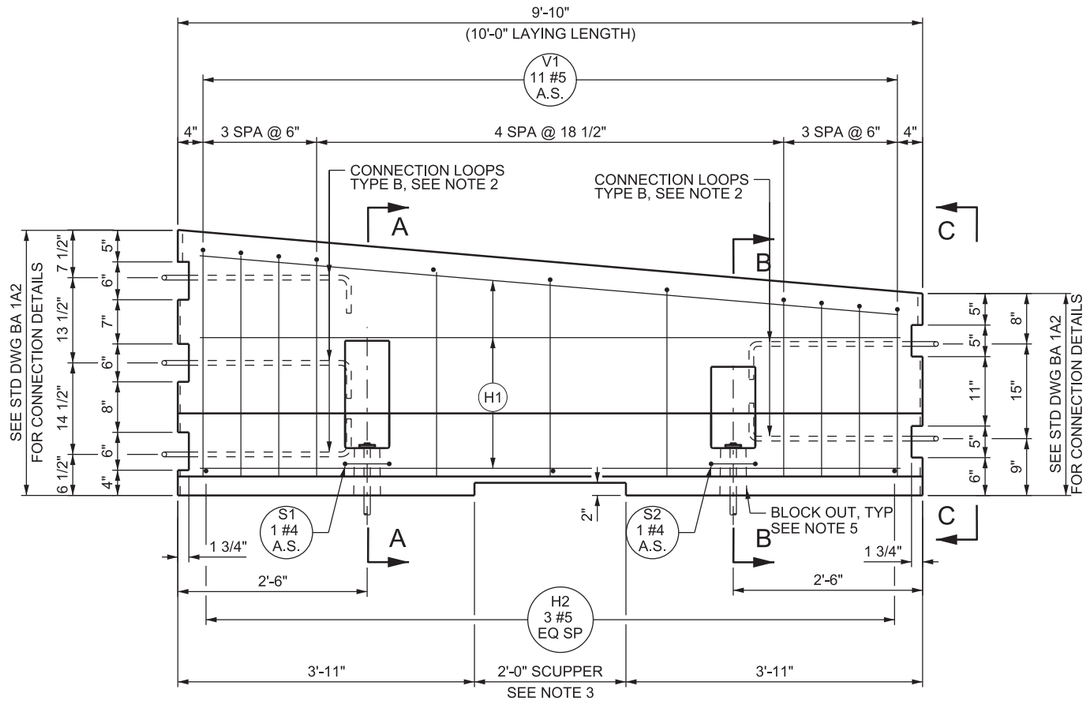


## ELEVATION

| BAR MARK | BAR SIZE | NO. BARS | SKETCH | LOCATION |
|---|---|---|---|---|
| H1 | #5 | 7 | HORIZONTAL IN BARRIER TIED INSIDE V1 BARS | 9'-3" |
| H2 | #5 | 3 | HORIZONTAL IN BARRIER TIED INSIDE V1 BARS | 1'-7" |
| S1 | #4 | 1 | HORIZONTAL AROUND BARRIER STABILIZATION SLOTS<br>TOTAL LENGTH = 5'-7" | 20 1/4"; 7 1/4"; BLOCK OUTS; 1 1/2" R, TYP; 12" |
| S2 | #4 | 1 | HORIZONTAL AROUND BARRIER STABILIZATION SLOTS<br>TOTAL LENGTH = 5'-3" | 18 1/4"; 7 1/4"; BLOCK OUTS; 1 1/2" R, TYP; 12" |
| V1 | #5 | 11 | VERTICAL IN BARRIER | |

| H | W | QTY |
|---|---|---|
| 36 1/2" | 19" | 1 |
| 36" | 18 1/2" | 1 |
| 35 1/2" | 18" | 1 |
| 35" | 17 1/2" | 1 |
| 33 1/2" | 16" | 1 |
| 32" | 14" | 1 |
| 30 1/2" | 12 1/2" | 1 |
| 29" | 11" | 1 |
| 28 1/2" | 10 1/2" | 1 |
| 28" | 10" | 1 |
| 27 1/2" | 9 1/2" | 1 |

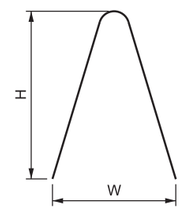


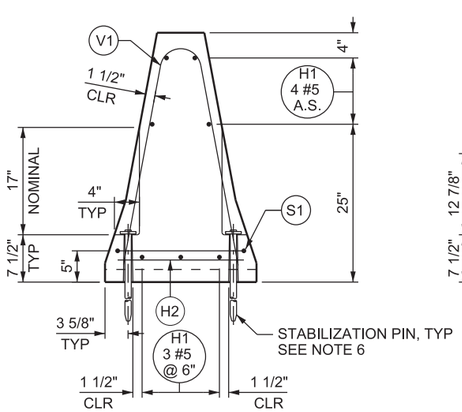


## SECTION A-A

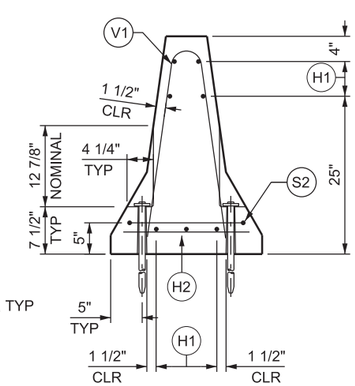


## SECTION B-B

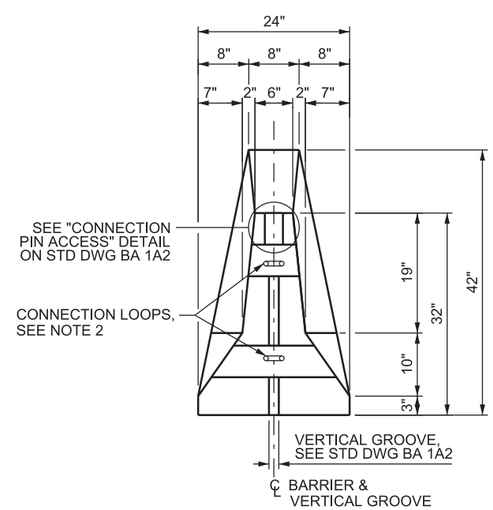


## VIEW C-C

**NOTES**

1. SEE STD DWG BA 1A1 FOR GENERAL NOTES.
2. SEE "BARRIER CONNECTION DETAILS" ON STD DWG BA 1A2 FOR CONNECTION LOOP DETAILS.
3. PROVIDE SCUPPERS WHEN NOTED ON PLANS. DO NOT USE BARRIER SEAL WHEN SCUPPERS ARE PRESENT ON BARRIER.
4. USE THIS TRANSITION SECTION WHEN A CRASH CUSHION OR W-BEAM GUARDRAIL TRANSITION IS REQUIRED ON PRECAST CONCRETE CONSTANT SLOPE BARRIER - 42 INCH
5. SEE "BARRIER BLOCK OUT AND STABILIZATION PIN DETAILS" ON STD DWG BA 1A2 FOR DETAILS.
6. USE THIS TRANSITION SECTION WHEN A CRASH CUSHION OR W-BEAM GUARDRAIL TRANSITION IS REQUIRED ON A CONSTANT SLOPE BRIDGE PARAPET OR PRECAST CONCRETE CONSTANT SLOPE BARRIER - 42 INCH.
7. BARRIER SHAPE VARIES LINEARLY OVER LENGTH OF BARRIER TRANSITION.
8. EACH BARRIER UNIT WEIGHS 2.7 TONS.

SUPPLEMENTAL DRAWING

REVISIONS

| NO. | DATE | APPR. | REMARKS |
|---|---|---|---|
| 1 | 08/29/19 | SDD | MODIFIED DESIGN ONLY NOTES TO NOTES. |

**UTAH DEPARTMENT OF TRANSPORTATION**
STANDARD DRAWINGS FOR ROAD AND BRIDGE CONSTRUCTION
SALT LAKE CITY, UTAH

RECOMMENDED FOR APPROVAL — AUG. 29, 2019 DATE
CHAIRMAN STANDARDS COMMITTEE APPROVED — AUG. 29, 2019 DATE
DEPUTY DIRECTOR

PRECAST CONCRETE CONSTANT SLOPE BARRIER - 42 INCH, 32 INCH NEW JERSEY SHAPE TRANSITION
STANDARD DRAWING TITLE

STD. DWG. NO.
BA 3J

DGN File:L:\Standard.Drawings\Imperial\2017 Approved_Supplemental.Issues\Suppl0 Approved August - 2019\Backup1\BA03J.dgn
04-SEP-2019

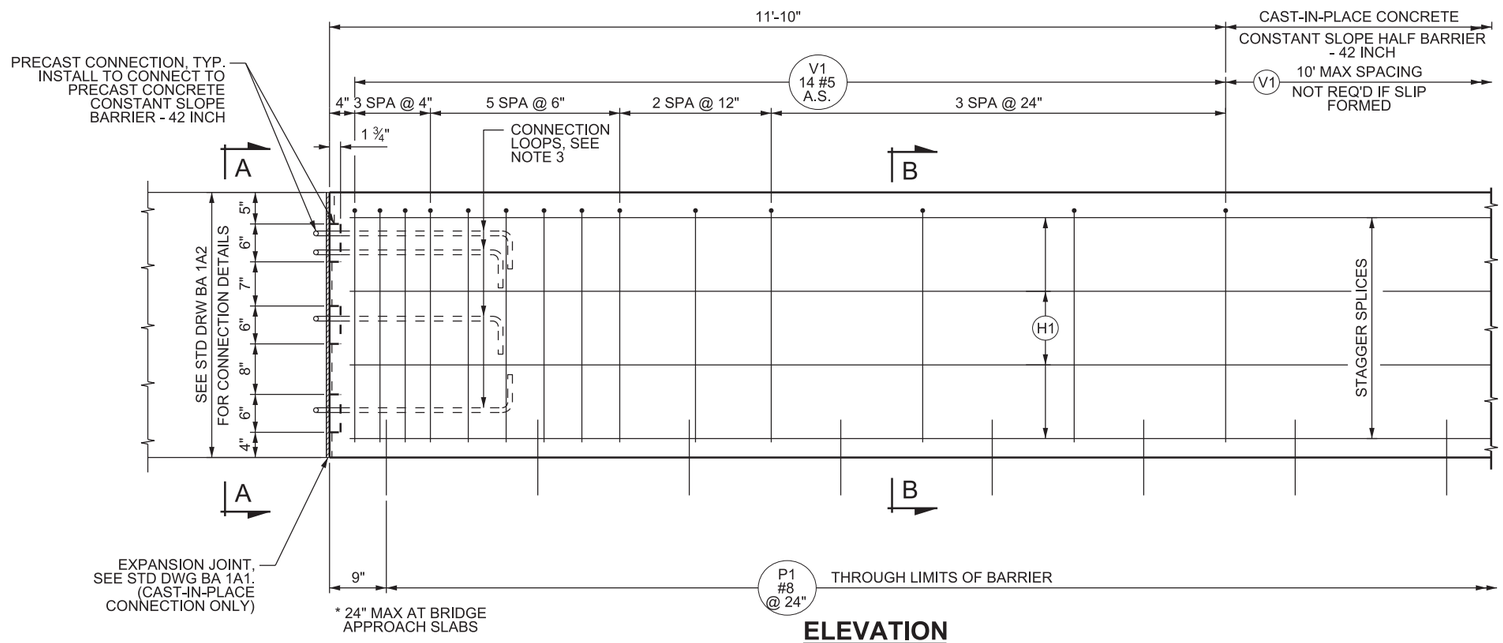


## ELEVATION

| BAR MARK | BAR SIZE | LOCATION | SKETCH |
|---|---|---|---|
| P1 | #8 | (BARRIER WITH SCUPPERS)<br><br>PAVEMENT TO BARRIER THROUGH LIMITS OF BARRIER (VERTICAL) | 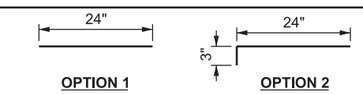  |
| P1 | #8 | PAVEMENT TO BARRIER THROUGH LIMITS OF BARRIER (VERTICAL) | 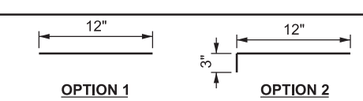  |
| H1 | #5 | HORIZONTAL IN BARRIER TIED INSIDE V1 BARS CONTINUOUS THROUGH LENGTH OF BARRIER | |
| V1 | #5 | VERTICAL IN BARRIER<br><br>TOTAL LENGTH:<br>OPTION 1 = 6'-4"<br>OPTION 2 = 7'-1 7/8" | 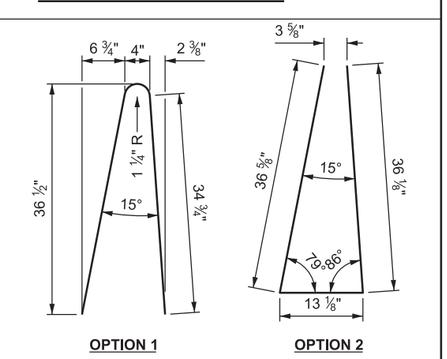  |

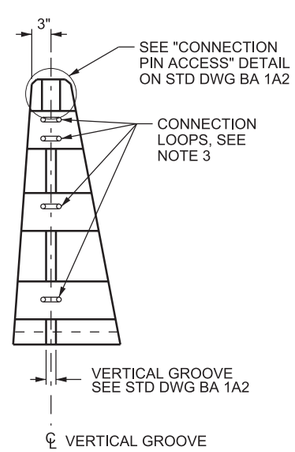


## VIEW A-A

PRECAST CONNECTION ONLY

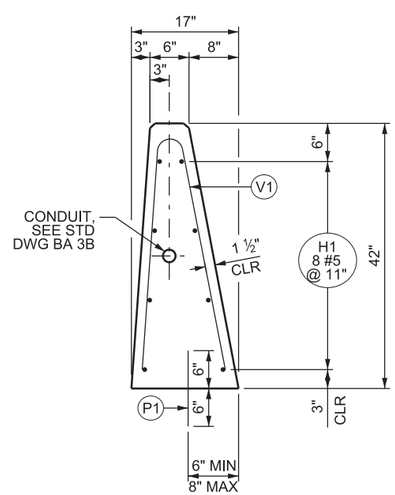


## SECTION B-B

**NOTES:**

1. SEE STD DWG BA 1A1 FOR GENERAL NOTES.
2. SEE "BARRIER CONNECTION DETAILS" ON STD DWG BA 1A2 FOR CONNECTION LOOP DETAILS.
3. DRILL AND EPOXY BOND P1 BARS OR HAND POSITION WHILE CONCRETE IS IN A WORKABLE FORM WHEN USING PCCP PAVEMENT.

SUPPLEMENTAL DRAWING

REVISIONS

| NO. | DATE | APPR. | REMARKS |
|---|---|---|---|
| 1 | 08/29/19 | SDD | MODIFIED DESIGN ONLY NOTES TO NOTES. |

**UTAH DEPARTMENT OF TRANSPORTATION**
STANDARD DRAWINGS FOR ROAD AND BRIDGE CONSTRUCTION
SALT LAKE CITY, UTAH

RECOMMENDED FOR APPROVAL — AUG. 29, 2019 DATE
CHAIRMAN STANDARDS COMMITTEE APPROVED — AUG. 29, 2019 DATE
DEPUTY DIRECTOR

CAST-IN-PLACE CONCRETE CONSTANT SLOPE HALF BARRIER - 42 INCH

STANDARD DRAWING TITLE

STD. DWG. NO.
BA 3K1

DGN File:L:\Standard_Drawings\Imperial\2017 Approved_Supplemental_Issues\Suppl0 Approved August - 2019\Backup\BA03K1.dgn
04-SEP-2019

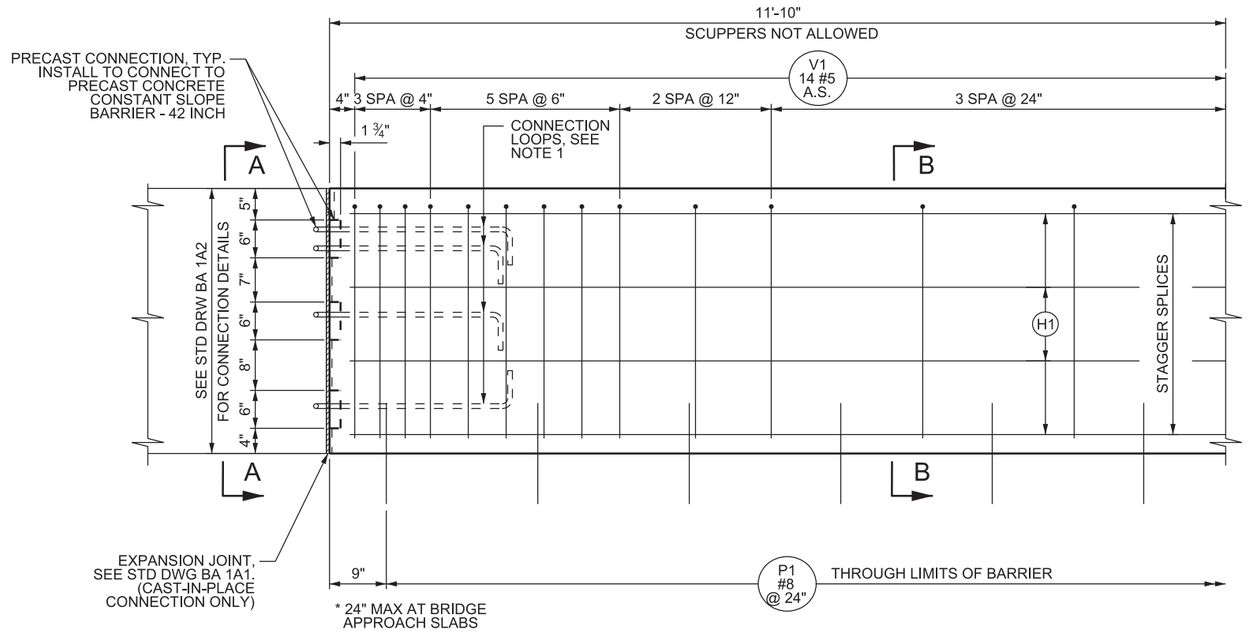


## ELEVATION

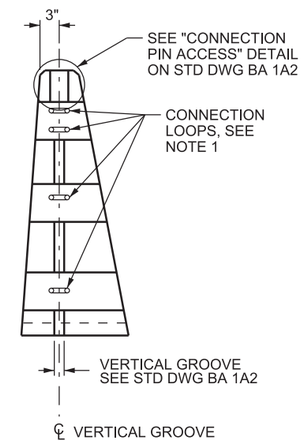


## VIEW A-A

PRECAST CONNECTION ONLY

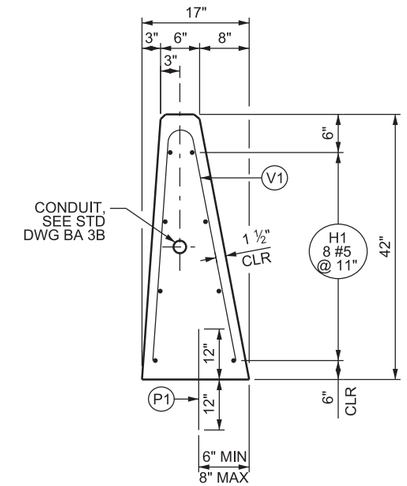


## SECTION B-B

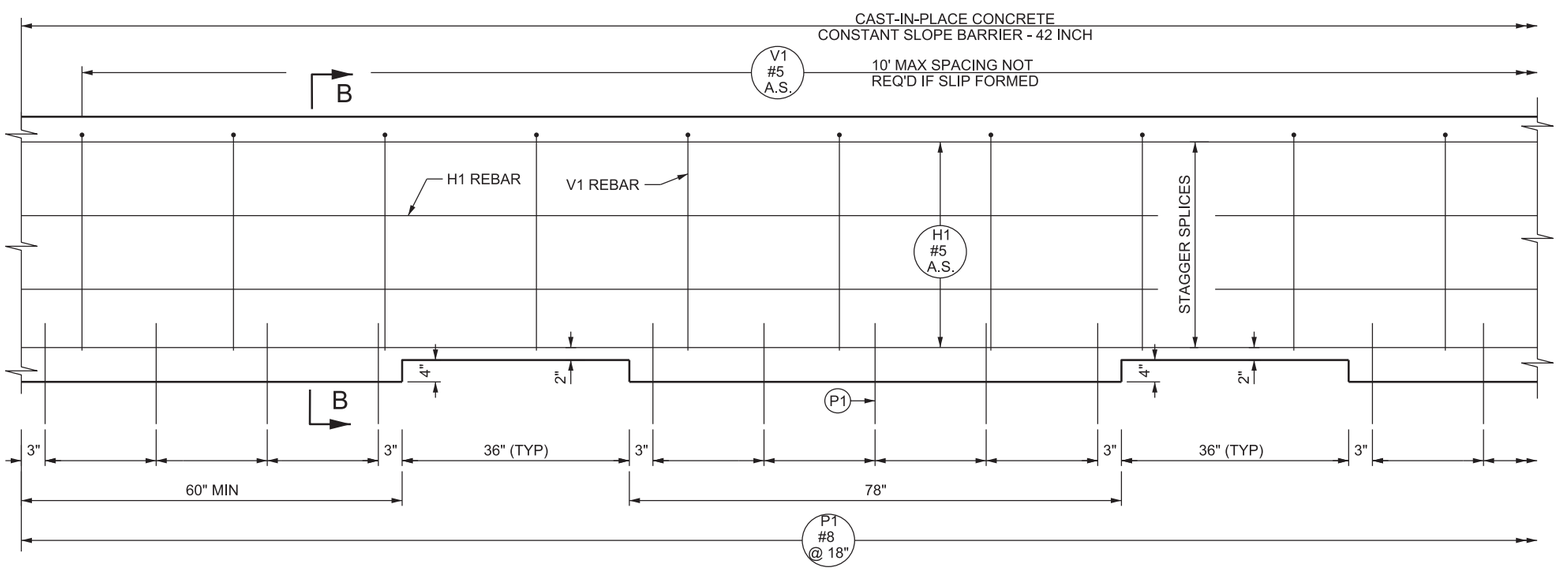


## ELEVATION

**NOTES:**

1. SEE "BARRIER CONNECTION DETAILS" ON STD DWG BA 1A2 FOR CONNECTION LOOP DETAILS.
2. DRILL AND EPOXY BOND P1 BARS OR HAND POSITION WHILE CONCRETE IS IN A WORKABLE FORM WHEN USING PCCP PAVEMENT.
3. SEE STD DWG BA 3K1 FOR REINFORCING STEEL SCHEDULE AND NOTES.
4. DO NOT USE BARRIER SEAL WHEN SCUPPERS ARE PRESENT ON BARRIER.
5. SEE STD DWG BA 3A2 FOR APPROACH AND TRAILING END TREATMENTS. NO EXPANSION JOINT REQUIRED.
6. SEE STD DWG BA 1A1 FOR GENERAL NOTES.

SUPPLEMENTAL DRAWING

REVISIONS

| NO. | DATE | APPR. | REMARKS |
|---|---|---|---|
| 1 | 08/29/19 | SDD | MODIFIED DESIGN ONLY NOTES TO NOTES. |

**UTAH DEPARTMENT OF TRANSPORTATION**
STANDARD DRAWINGS FOR ROAD AND BRIDGE CONSTRUCTION
SALT LAKE CITY, UTAH

RECOMMENDED FOR APPROVAL — AUG. 29, 2019 DATE
CHAIRMAN STANDARDS COMMITTEE APPROVED — AUG. 29, 2019 DATE
DEPUTY DIRECTOR

CAST-IN-PLACE CONCRETE CONSTANT SLOPE HALF BARRIER WITH SCUPPERS - 42 INCH
STANDARD DRAWING TITLE

STD. DWG. NO.
BA 3K2

04-SEP-2019 DGN File:L:\Standard.Drawings\Imperial\2017 Approved_Supplemental.Issues\Suppl0 Approved August - 2019\Backup\BA03K2.dgn

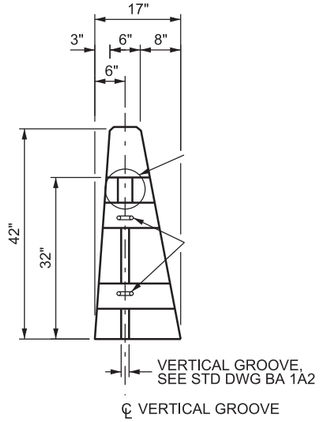


## VIEW B-B

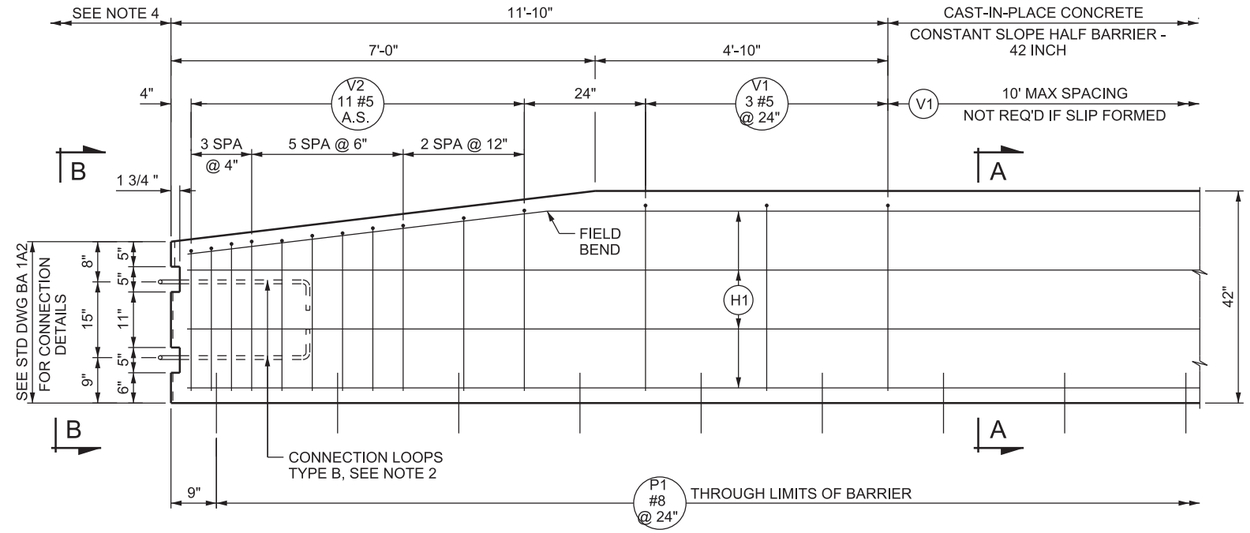


## ELEVATION - APPROACH END SECTION

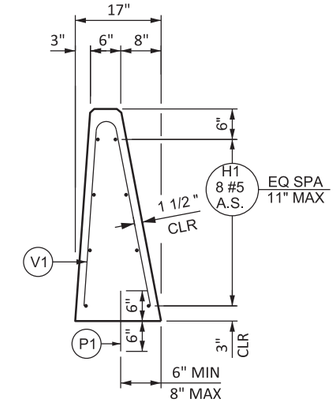


## SECTION A - A

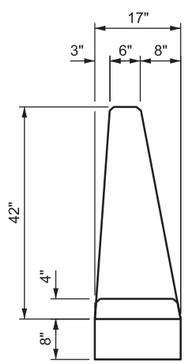


## VIEW D-D

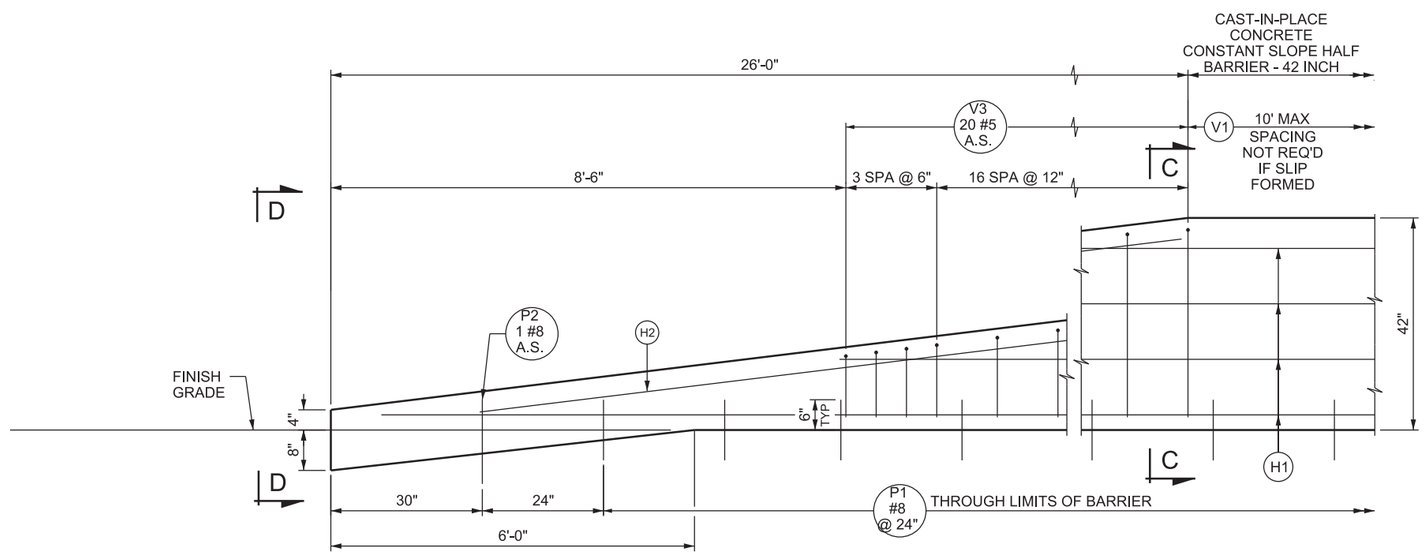


## ELEVATION - TRAILING SLOPED END SECTION

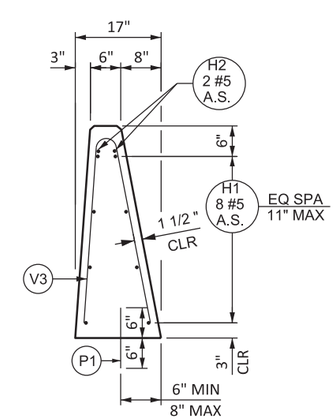


## SECTION C - C

**NOTES**

1. SEE STD DWG BA 1A1 FOR GENERAL NOTES.
2. SEE "BARRIER CONNECTION DETAILS" ON STD DWG BA 1A2 FOR CONNECTION LOOP DETAILS.
3. SEE STD DWG BA 3K4 FOR REINFORCING STEEL SCHEDULE AND NOTES.

SUPPLEMENTAL DRAWING

REVISIONS

| NO. | DATE | APPR. | REMARKS |
|---|---|---|---|
| 1 | 08/29/19 | SDD | DELETED DESIGN ONLY NOTES. |

**UTAH DEPARTMENT OF TRANSPORTATION**
STANDARD DRAWINGS FOR ROAD AND BRIDGE CONSTRUCTION
SALT LAKE CITY, UTAH

RECOMMENDED FOR APPROVAL — AUG. 29, 2019 DATE
CHAIRMAN STANDARDS COMMITTEE APPROVED — AUG. 29, 2019 DATE
DEPUTY DIRECTOR

CAST-IN-PLACE CONCRETE CONSTANT SLOPE HALF BARRIER - 42 INCH
STANDARD DRAWING TITLE

STD. DWG. NO.
BA 3K3

DGN File:L:\Standard.Drawings\Imperial\2017 Approved_Supplemental.Issues\Suppl0 Approved August - 2019\Backup1\BA03K3.dgn
04-SEP-2019

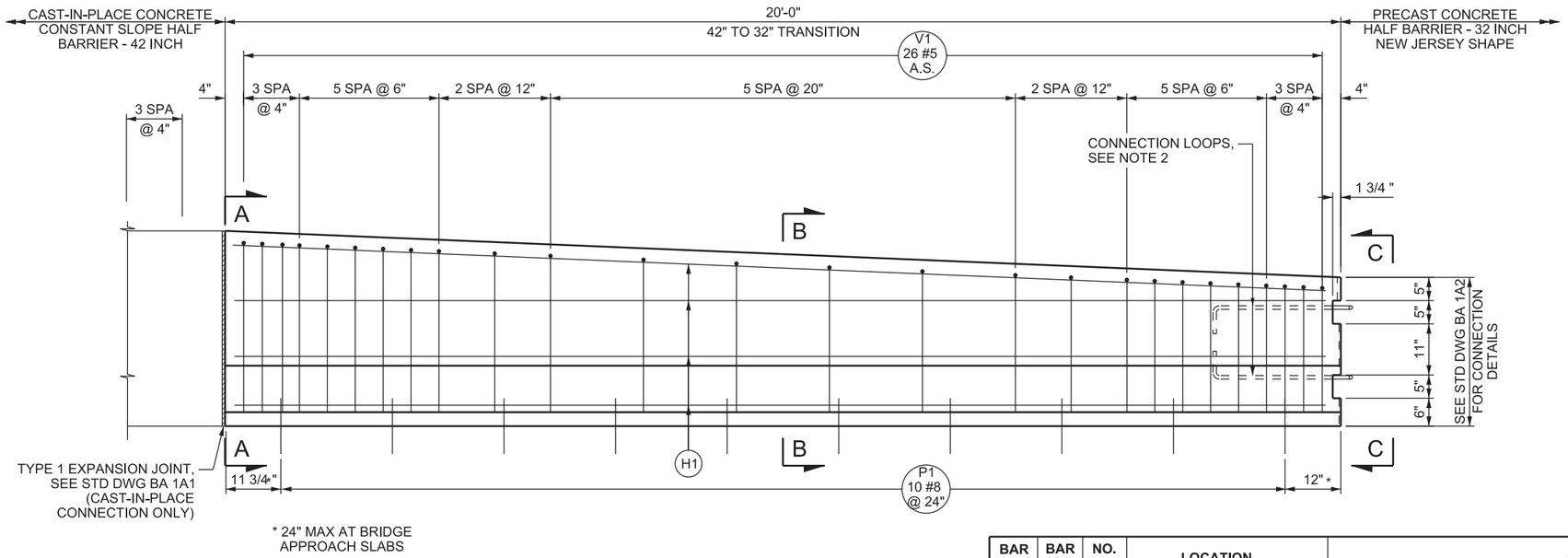


## ELEVATION

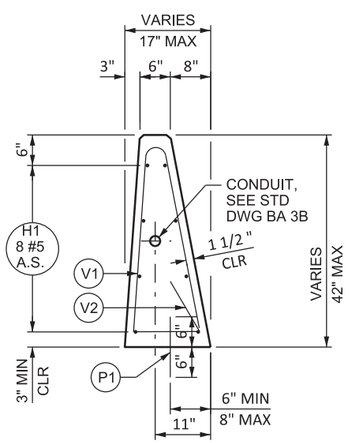


## SECTION A-A

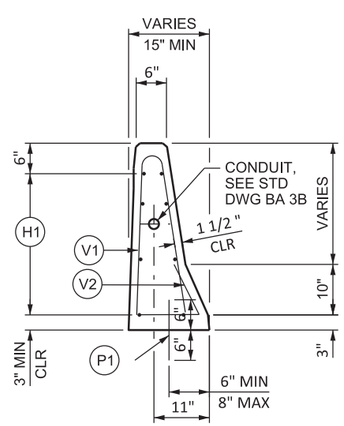


## SECTION B-B

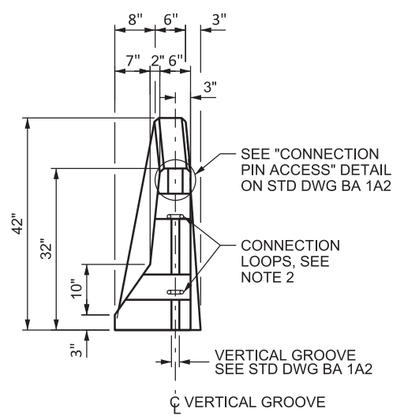


## VIEW C-C

| BAR MARK | BAR SIZE | NO. BARS | LOCATION | SKETCH |
|---|---|---|---|---|
| P1 | #8 | 10 | PAVEMENT TO BARRIER THROUGH LIMITS OF BARRIER (VERTICAL) | 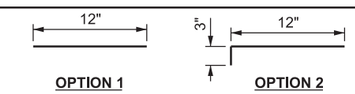  |
| H1 | #5 | 8 | HORIZONTAL IN BARRIER TIED INSIDE V1 BARS CONTINUOUS THROUGH LENGTH OF BARRIER | 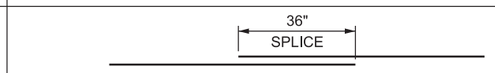  |
| V1 | #5 | 26 | VERTICAL IN BARRIER | 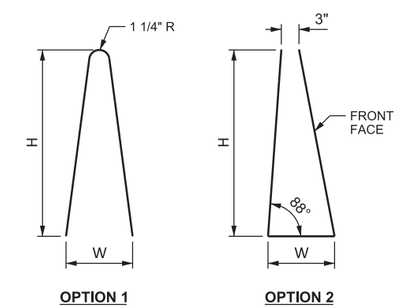  |
| V2 | #5 | 18 | VERTICAL IN BARRIER TIE TO V1 BARS<br><br>TOTAL LENGTH = 2'-1" | 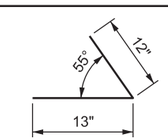  |

| H | W | QTY |
|---|---|---|
| 36 1/2" | 13" | 1 |
| 36 1/2" | 13" | 1 |
| 36 1/2" | 12 1/2" | 1 |
| 36" | 12 1/2" | 1 |
| 36" | 12 1/2" | 1 |
| 35 1/2" | 12" | 1 |
| 35 1/2" | 12" | 1 |
| 35" | 12" | 1 |
| 35" | 11 1/2" | 1 |
| 34 1/2" | 11 1/2" | 1 |
| 34" | 11" | 1 |
| 33" | 10 1/2" | 1 |
| 32" | 9 1/2" | 1 |
| 31 1/2" | 9" | 1 |
| 30 1/2" | 8 1/2" | 1 |
| 29 1/2" | 8" | 1 |
| 29" | 8" | 1 |
| 29" | 7 1/2" | 1 |
| 28 1/2" | 7" | 1 |
| 28" | 7" | 1 |
| 28" | 7" | 1 |
| 28" | 6 1/2" | 1 |
| 27 1/2" | 6 1/2" | 1 |
| 27 1/2" | 6 1/2" | 1 |
| 27" | 6" | 1 |
| 27" | 6" | 1 |

**NOTES:**

1. SEE STD DWG BA 1A1 FOR GENERAL NOTES.
2. SEE "BARRIER CONNECTION DETAILS" ON STD DWG BA 1A2 FOR CONNECTION LOOP DETAILS. PLACE THE APPROPRIATE CONNECTION LOOP CONFIGURATION THAT CORRESPONDS WITH ADJACENT PRECAST BARRIER.
3. BARRIER SHAPE VARIES LINEARLY OVER LENGTH OF BARRIER TRANSITION.
4. BARRIER TRANSITIONS MAY BE LENGTHENED, WITH ENGINEER'S APPROVAL, TO ELIMINATE A GAP BETWEEN PRECAST AND CAST-IN-PLACE SECTIONS.
5. DRILL AND EPOXY BOND P1 BARS OR HAND POSITION WHILE CONCRETE IS IN A WORKABLE FORM WHEN USING PCCP PAVEMENT.

SUPPLEMENTAL DRAWING

REVISIONS

| NO. | DATE | APPR. | REMARKS |
|---|---|---|---|
| 1 | 08/29/19 | SDD | MOVED DESIGN ONLY NOTE TO NOTES. |

**UTAH DEPARTMENT OF TRANSPORTATION**
STANDARD DRAWINGS FOR ROAD AND BRIDGE CONSTRUCTION
SALT LAKE CITY, UTAH

RECOMMENDED FOR APPROVAL — AUG. 29, 2019 DATE
CHAIRMAN STANDARDS COMMITTEE APPROVED — AUG. 29, 2019 DATE
DEPUTY DIRECTOR

CAST-IN-PLACE
CONCRETE HALF BARRIER -
42 INCH CONSTANT SLOPE,
32 INCH NEW JERSEY
SHAPE BARRIER
TRANSITION
STANDARD DRAWING TITLE

STD. DWG. NO.
BA 3K5

04-SEP-2019 DGN File:L:\Standard.Drawings\Imperial\2017 Approved_Supplemental.Issues\Suppl0 Approved August - 2019\Backup1\BA03K5.dgn

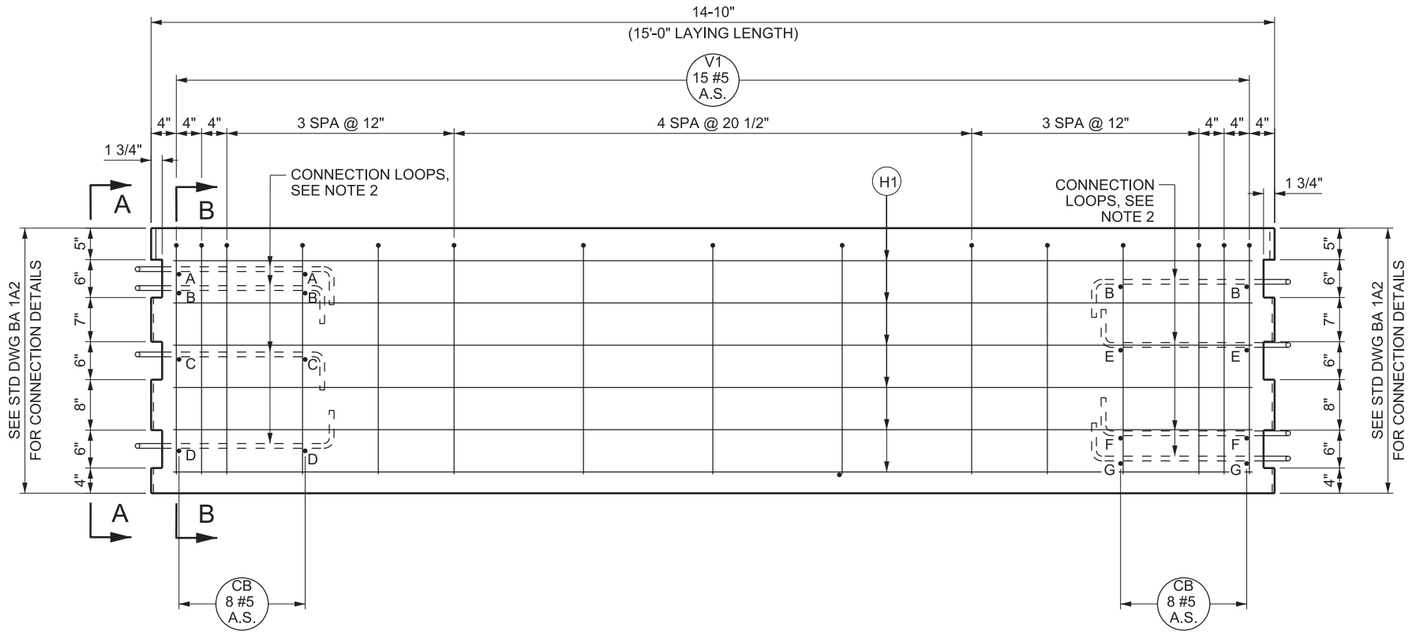


## ELEVATION

| BAR MARK | BAR SIZE | NO. BARS | LOCATION | SKETCH |
|---|---|---|---|---|
| H1 | #5 | 12 | HORIZONTAL IN BARRIER TIED INSIDE V1 BARS | 14'-3" |
| CB | #4 | 16 | CROSS BARS (CB) TIED TO V1 BARS | ID / L / QTY: A 4 1/2" 2; B 5" 4; C 7" 2; D 10" 2; E 6 1/2" 2; F 9 1/2" 2; G 10" 2 — L |
| V1 | #5 | 15 | VERTICAL IN BARRIER | 3 1/2", 7 1/4", 38 1/2", 1 3/4" R, 37 3/4", 11° — OPTION 1; 3 1/4", 7 1/2", 38 1/2", 39 1/4", 79°, 10 5/8" — OPTION 2 |

TOTAL LENGTH:
OPTION 1 = 6'-7 5/8"
OPTION 2 = 7'-4 3/8"

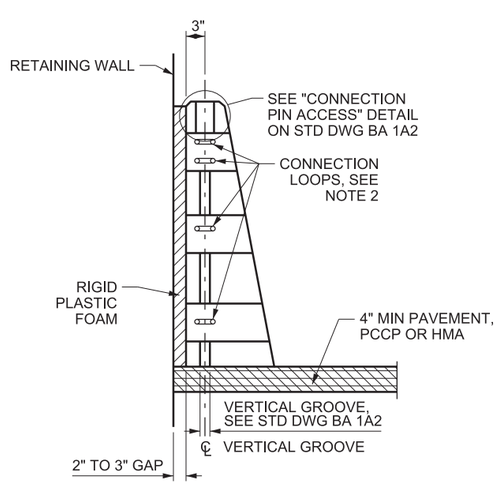


## VIEW A-A

AT RETAINING WALL

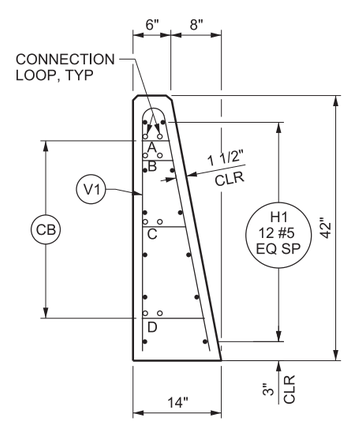


## SECTION B-B

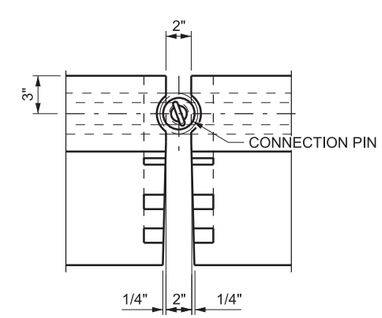


## PARTIAL PLAN

NOTES:
1. SEE STD DWG BA 1A1 AND BA 1A2 FOR GENERAL NOTES.
2. SEE "BARRIER CONNECTION DETAILS" ON STD DWG BA 1A2 FOR CONNECTION LOOP DETAILS.
3. DO NOT USE AS RETAINING BARRIER. REFER TO STD DWG BA 1C FOR RETAINING BARRIER APPLICATIONS.
4. USE ONLY IN FRONT OF A RETAINING WALL. DO NOT USE IN A WORK ZONE APPLICATION.
5. EACH BARRIER UNIT WEIGHS 3.2 TONS.

SUPPLEMENTAL DRAWING

REVISIONS

| NO. | DATE | APPR. | REMARKS |
|---|---|---|---|
| 1 | 08/29/19 | SDD | MODIFIED DESIGN ONLY NOTES TO NOTES. |

**UTAH DEPARTMENT OF TRANSPORTATION**
STANDARD DRAWINGS FOR ROAD AND BRIDGE CONSTRUCTION
SALT LAKE CITY, UTAH

RECOMMENDED FOR APPROVAL — AUG. 29, 2019 DATE
CHAIRMAN STANDARDS COMMITTEE APPROVED — AUG. 29, 2019 DATE
DEPUTY DIRECTOR

PRECAST CONCRETE CONSTANT SLOPE HALF BARRIER - 42 INCH
STANDARD DRAWING TITLE

STD. DWG. NO.
BA 3L

DGN File:L:\Standard.Drawings\Imperial\2017 Approved_Supplemental.Issues\Suppl0 Approved August - 2019\Backup1\BA03L.dgn
04-SEP-2019

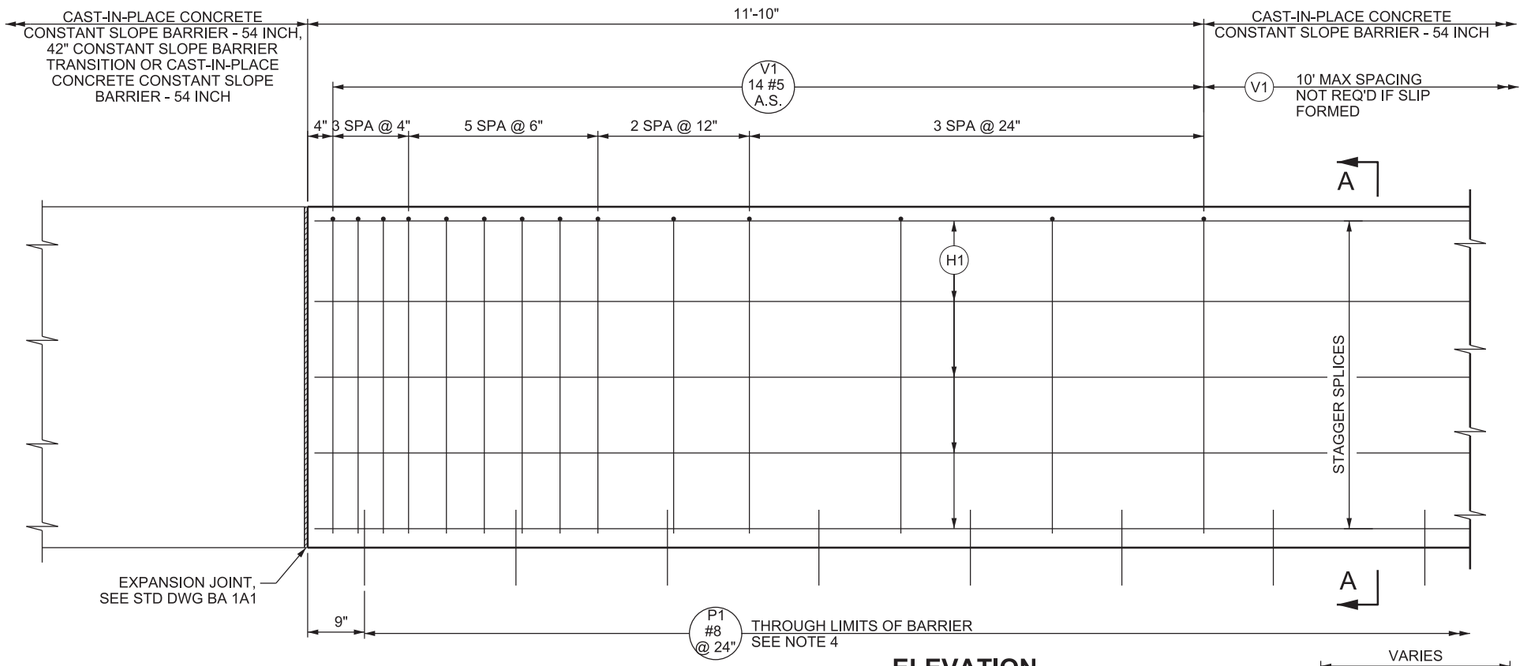


## ELEVATION

54" CONSTANT SLOPE BARRIER SHOWN, STEPPED MEDIAN BARRIER SIMILAR

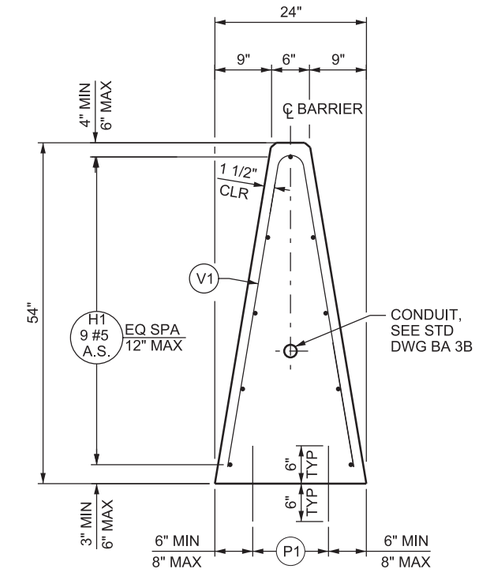


## SECTION A-A

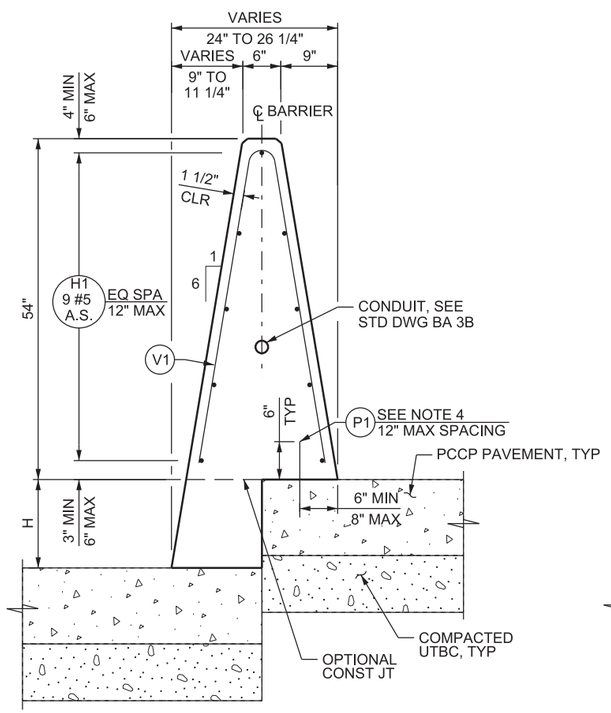


## STEPPED MEDIAN BARRIER

H = 0 INCH TO 14 INCH (PCCP ONLY)

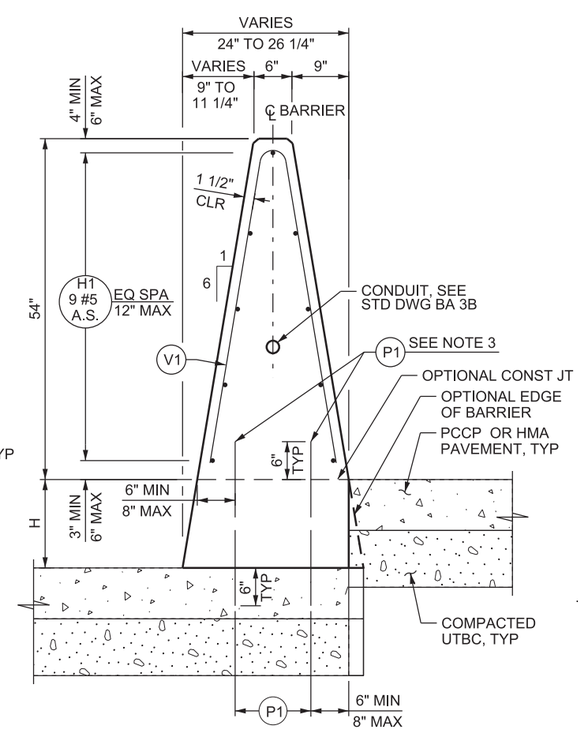


## STEPPED MEDIAN BARRIER

H = 0 INCH TO 14 INCH (PCCP OR HMA)

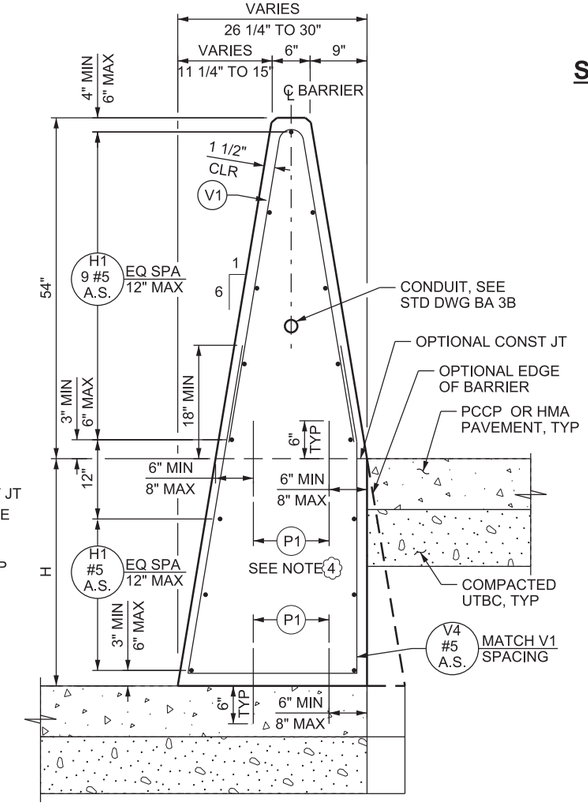


## STEPPED MEDIAN BARRIER

H = 14 INCH TO 36 INCH

**NOTES:**

1. SEE STD DWG BA 1A1 FOR GENERAL NOTES.
2. V4 BAR SPACING MATCHES V1 SPACING SHOWN IN ELEVATION.
3. P1 BARS THROUGH THE OPTIONAL CONSTRUCTION JOINT ARE NOT REQUIRED IF THE CONSTRUCTION JOINT IS NOT USED OR IF V4 BAR IS PRESENT.
4. USE A MAXIMUM OF 12 INCH SPACING FOR P1 BARS. SEE STEPPED MEDIAN BARRIER DETAILS FOR APPLICABLE LOCATION.

SUPPLEMENTAL DRAWING

REVISIONS

| NO. | DATE | APPR. | REMARKS |
|---|---|---|---|
| 1 | 08/29/19 | SDD | MODIFIED DESIGN ONLY NOTES TO NOTES. |

**UTAH DEPARTMENT OF TRANSPORTATION**
STANDARD DRAWINGS FOR ROAD AND BRIDGE CONSTRUCTION
SALT LAKE CITY, UTAH

RECOMMENDED FOR APPROVAL — AUG. 29, 2019 DATE
CHAIRMAN STANDARDS COMMITTEE APPROVED — AUG. 29, 2019 DATE
DEPUTY DIRECTOR

CAST-IN-PLACE CONCRETE CONSTANT SLOPE BARRIER - 54 INCH 1 OF 3
STANDARD DRAWING TITLE

STD. DWG. NO.
BA 3M1

DGN File:L:\Standard_Drawings\Imperial\2017 Approved_Supplemental_Issues\Suppl0 Approved August - 2019\Backup\BA03M1.dgn
04-SEP-2019

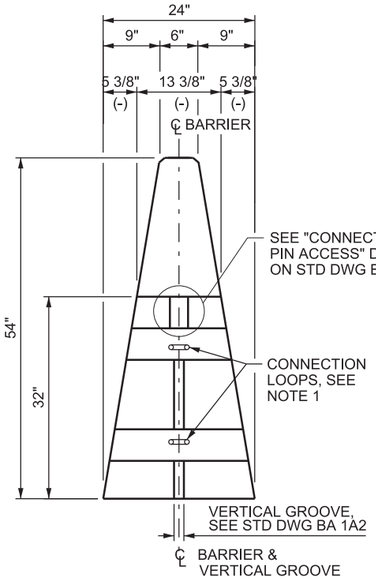


## VIEW B-B

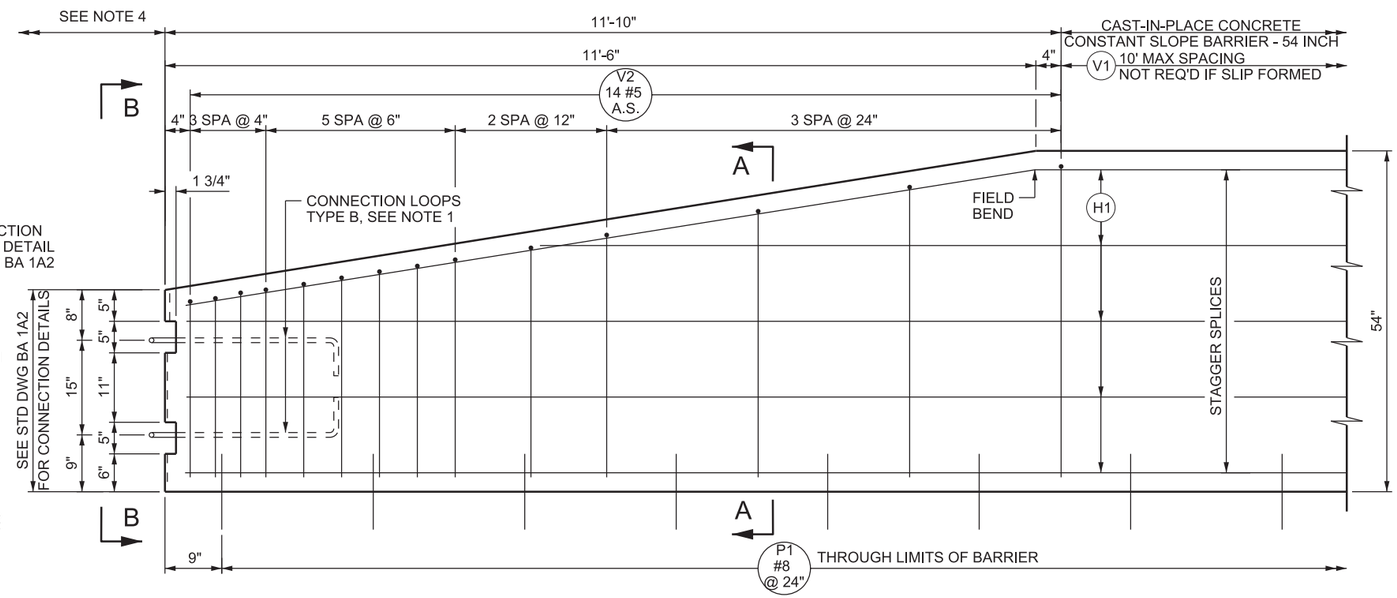


## ELEVATION - APPROACH END SECTION

TL-3 SHOWN; TL-5 SIMILAR

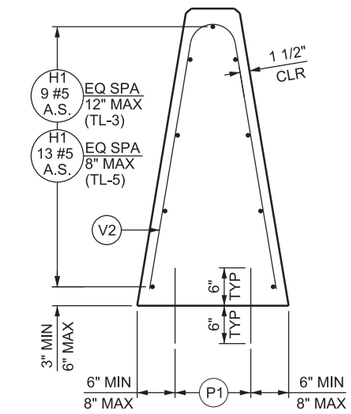


## SECTION A-A

TL-3 SHOWN; TL-5 SIMILAR

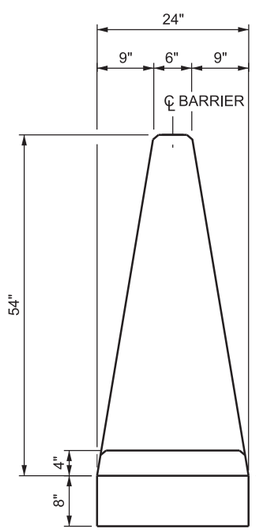


## VIEW D-D

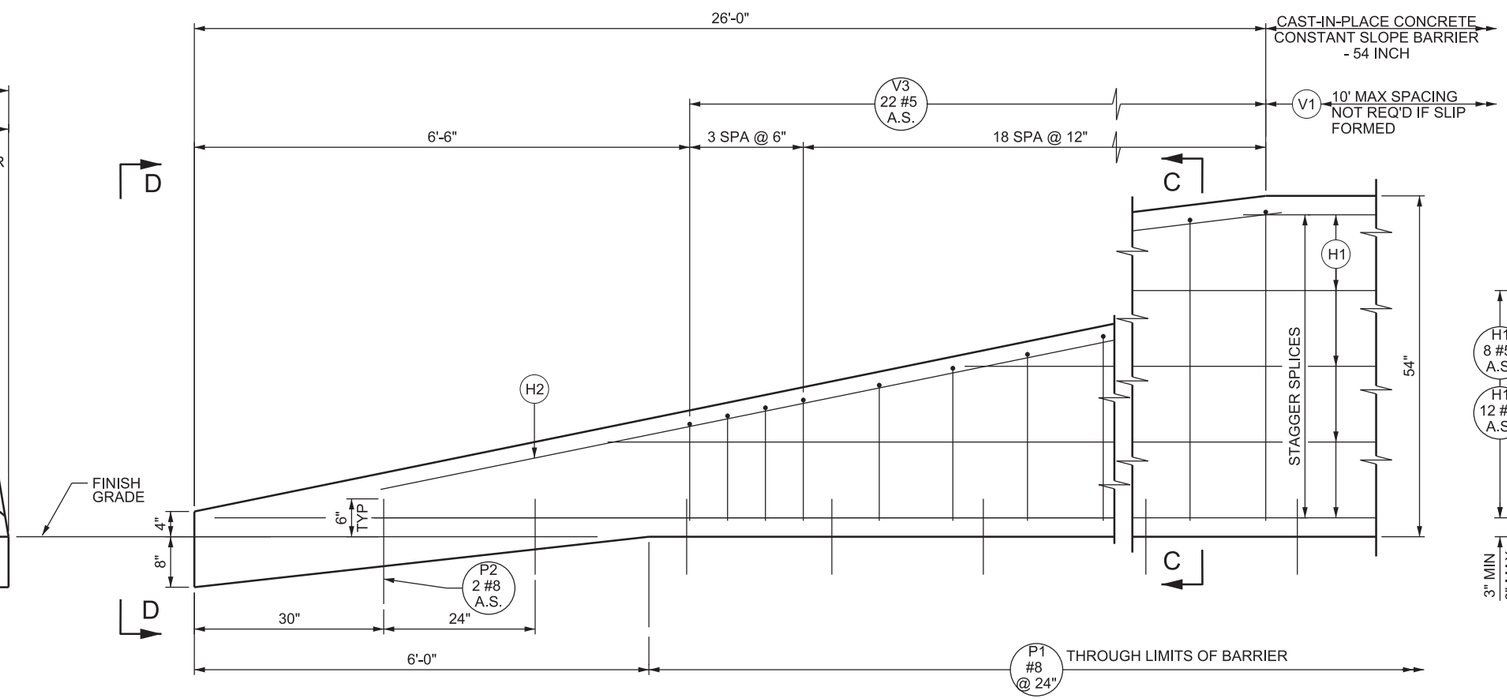


## ELEVATION - TRAILING SLOPED END SECTION

TL-3 SHOWN; TL-5 SIMILAR

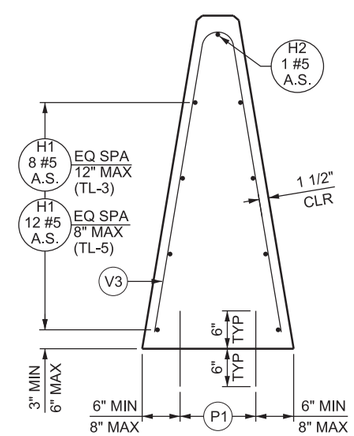


## SECTION C-C

TL-3 SHOWN; TL-5 SIMILAR

**NOTES:**

1. SEE "BARRIER CONNECTION DETAIL" ON STD DWG BA 1A2 FOR CONNECTION LOOP DETAILS.
2. USE H1 AND P1 BARS CONSISTENT WITH THE TEST LEVEL RATING OF ADJACENT BARRIER.

SUPPLEMENTAL DRAWING

REVISIONS

| NO. | DATE | APPR. | REMARKS |
|---|---|---|---|
| 1 | 08/29/19 | SDD | DELETED DESIGN ONLY NOTES. |

**UTAH DEPARTMENT OF TRANSPORTATION**
STANDARD DRAWINGS FOR ROAD AND BRIDGE CONSTRUCTION
SALT LAKE CITY, UTAH

RECOMMENDED FOR APPROVAL — AUG. 29, 2019 DATE
CHAIRMAN STANDARDS COMMITTEE APPROVED — AUG. 29, 2019 DATE
DEPUTY DIRECTOR

STANDARD DRAWING TITLE
CAST-IN-PLACE CONCRETE CONSTANT SLOPE BARRIER - 54 INCH
2 OF 3

STD. DWG. NO.
BA 3M2

DGN File:L:\Standard_Drawings\Imperial\2017 Approved_Supplemental_Issues\Suppl0 Approved August - 2019\Backup1\BA03M2.dgn
04-SEP-2019

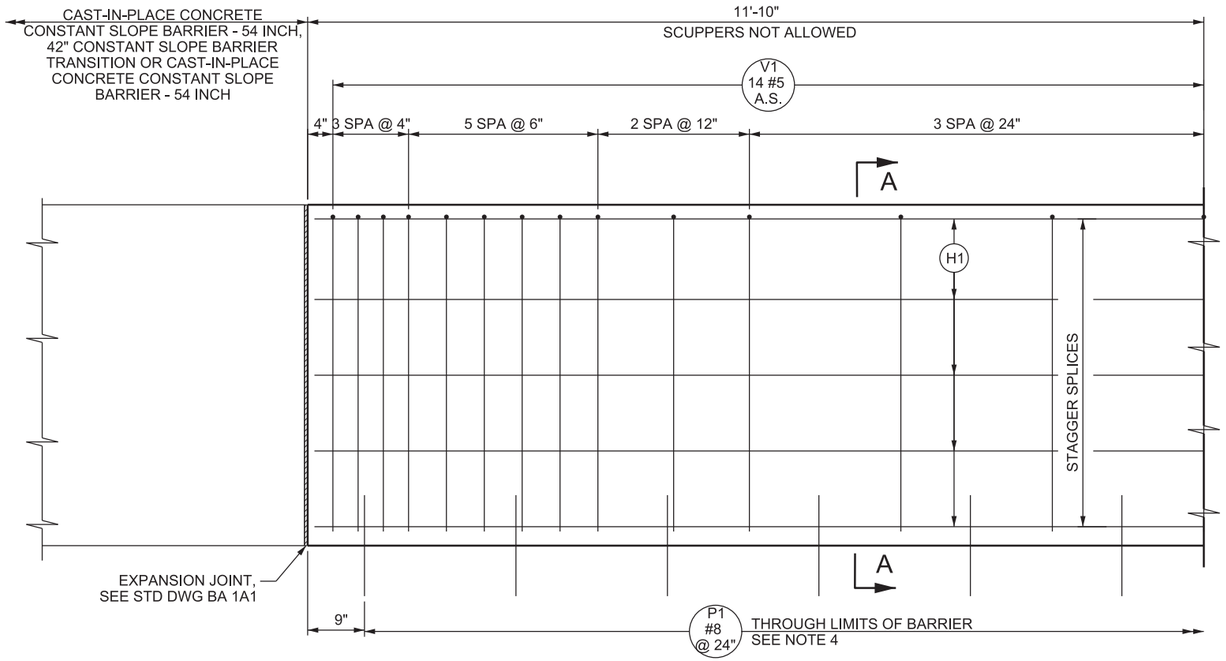


## ELEVATION

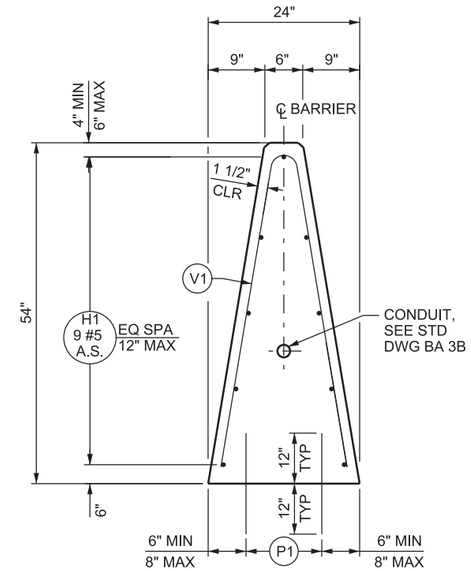


## SECTION A-A

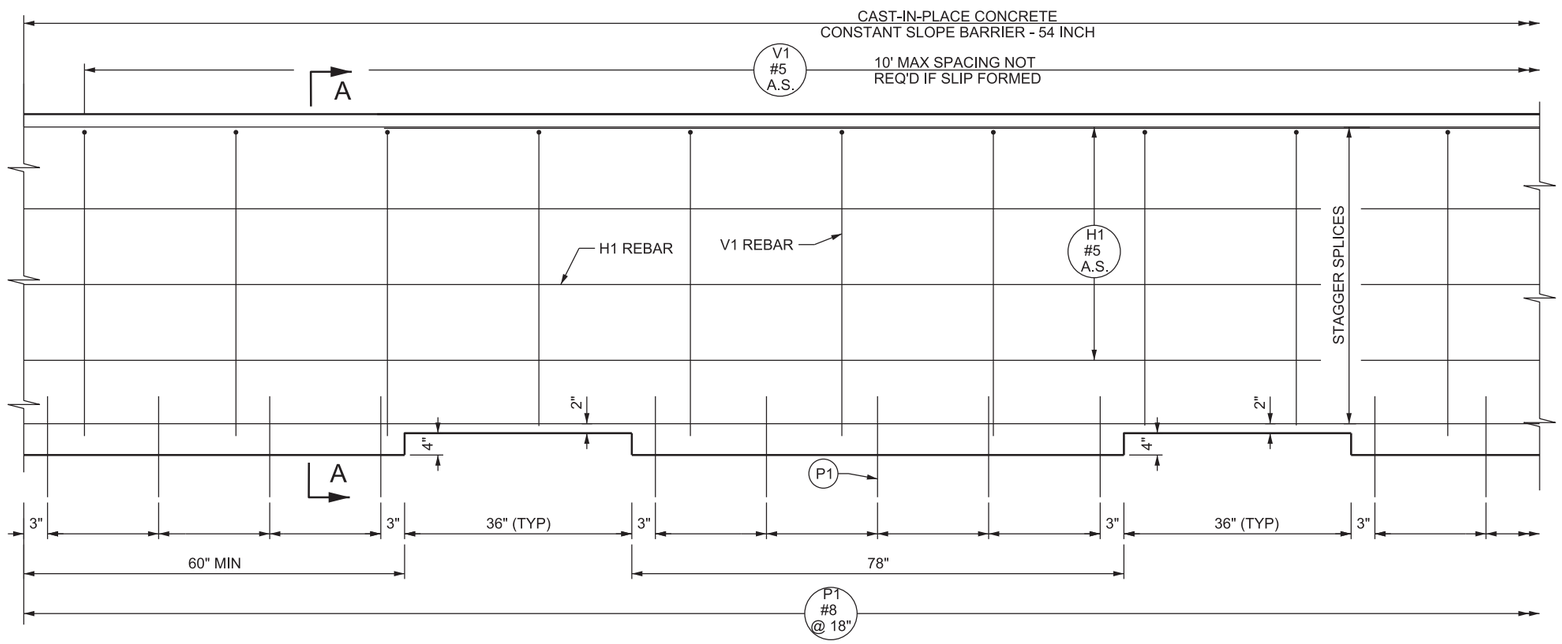


## ELEVATION

**NOTES:**

1. SEE "BARRIER CONNECTION DETAILS" ON STD DWG BA 1A2 FOR CONNECTION LOOP DETAILS.
2. DRILL AND EPOXY BOND P1 BARS OR HAND POSITION WHILE CONCRETE IS IN A WORKABLE FORM WHEN USING PCCP PAVEMENT.
3. SEE STD DWG BA 3M3 FOR REINFORCING STEEL SCHEDULE AND NOTES.
4. DO NOT USE BARRIER SEAL WHEN SCUPPERS ARE PRESENT ON BARRIER.
5. SEE STD DWG BA 3A2 FOR APPROACH AND TRAILING END TREATMENTS. NO EXPANSION JOINT REQUIRED.
6. SEE STD DWG BA 1A1 FOR GENERAL NOTES.

SUPPLEMENTAL DRAWING

REVISIONS

| NO. | DATE | APPR. | REMARKS |
|---|---|---|---|
| 1 | 08/29/19 | SDD | MODIFIED DESIGN ONLY NOTES TO NOTES. |

**UTAH DEPARTMENT OF TRANSPORTATION**
STANDARD DRAWINGS FOR ROAD AND BRIDGE CONSTRUCTION
SALT LAKE CITY, UTAH

RECOMMENDED FOR APPROVAL — AUG. 29, 2019 DATE
CHAIRMAN STANDARDS COMMITTEE APPROVED — AUG. 29, 2019 DATE
DEPUTY DIRECTOR

CAST-IN-PLACE CONCRETE CONSTANT SLOPE BARRIER WITH SCUPPERS - 54 INCH
STANDARD DRAWING TITLE

STD. DWG. NO.
BA 3M4

DGN File:L:\Standard.Drawings\Imperial\2017 Approved\.Supplemental.Issues\Suppl0 Approved August - 2019\Backup1\BA03M4.dgn
04-SEP-2019

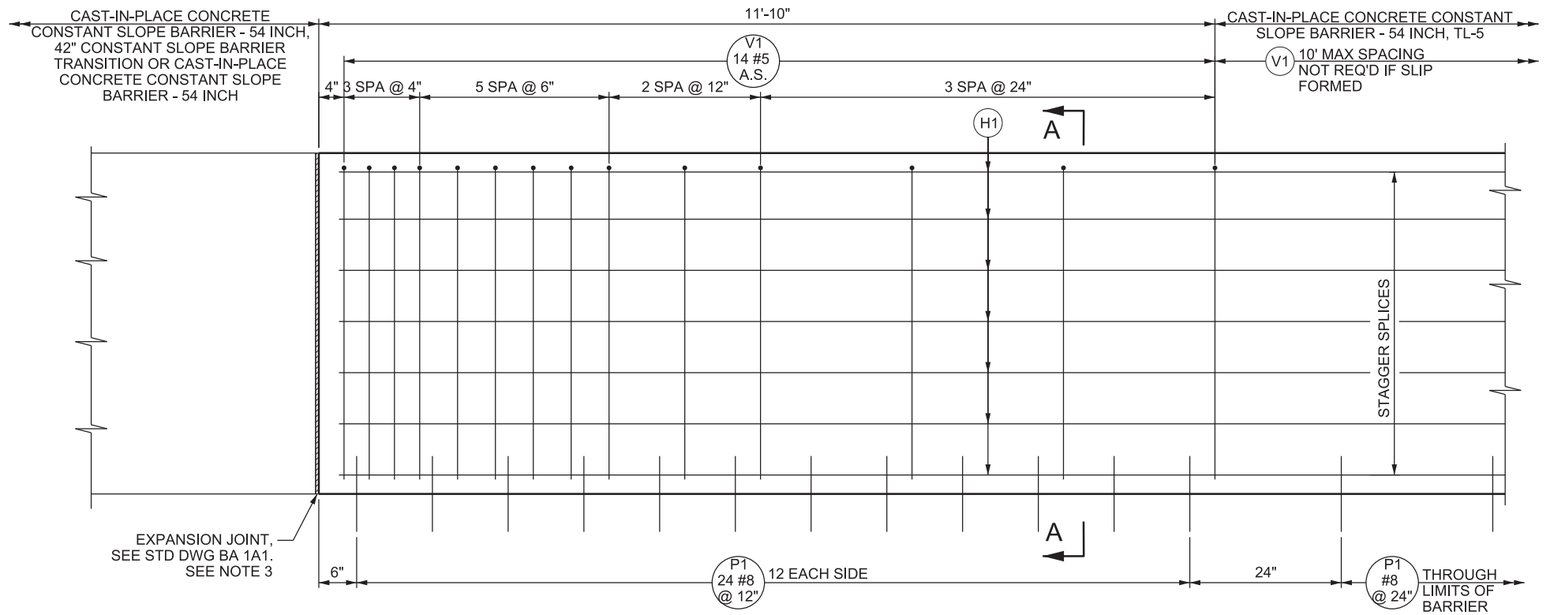


## ELEVATION

BARRIER ON PCCP

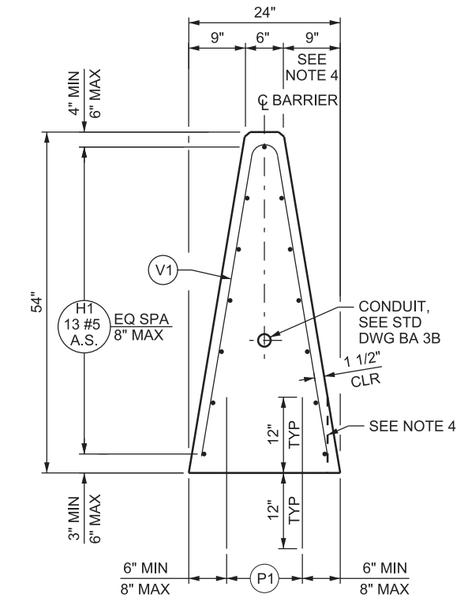


## SECTION A-A

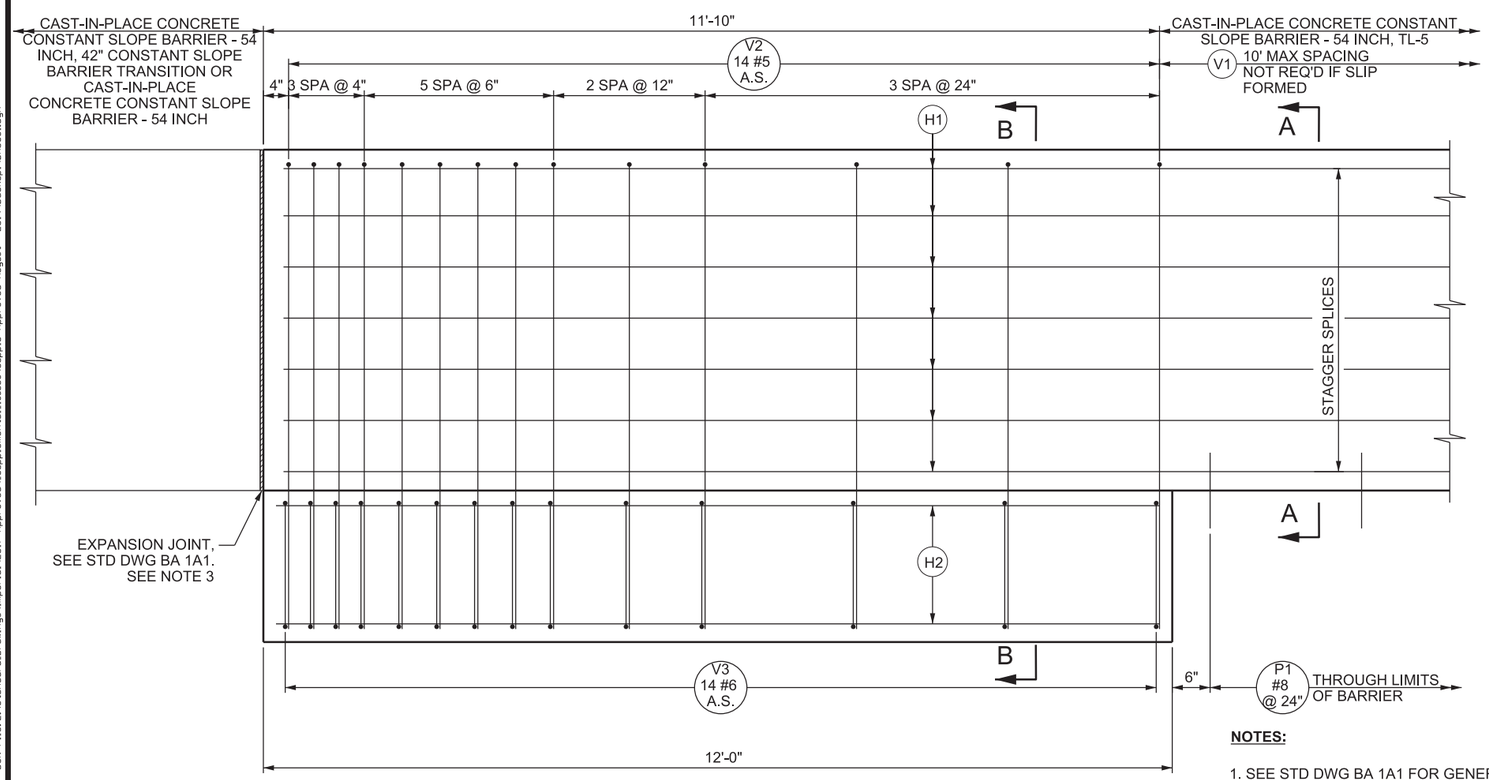


## ELEVATION

BARRIER ON HMA

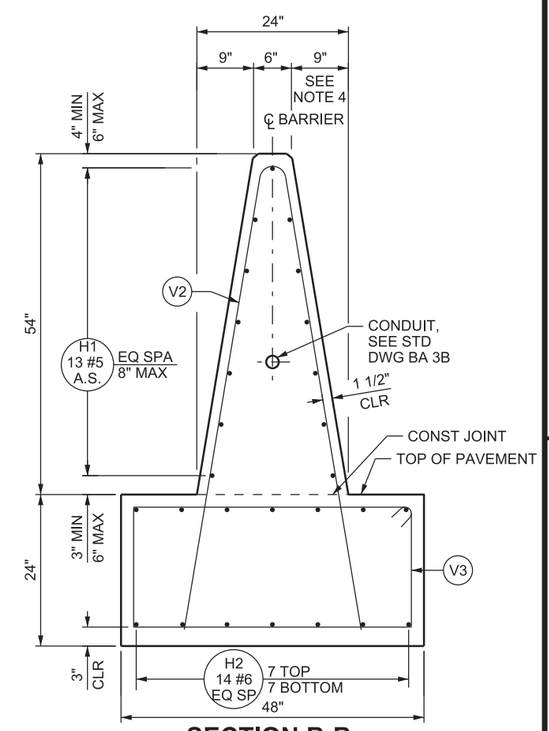


## SECTION B-B

**NOTES:**

1. SEE STD DWG BA 1A1 FOR GENERAL NOTES.
2. SEE STD DWG BA 3O2 FOR STEPPED MEDIAN DETAILS AND STD DWG BA 3O3 FOR REINFORCING STEEL SCHEDULE.
3. SEE STD DGW BA 3M2 FOR APPROACH END AND TRAILING END TREATMENTS. NO EXPANSION JOINT REQUIRED.
4. THE 9 INCH DIMENSION MAY BE REDUCED TO 7 INCHES AS SHOWN TO PROVIDE A MINIMUM 2 INCH CLEARANCE TO THE COLUMN IN COLUMN PROTECTION APPLICATIONS. ADJUST REINFORCING STEEL TO PROVIDE MINIMUM COVER.

SUPPLEMENTAL DRAWING

REVISIONS

| NO. | DATE | APPR. | REMARKS |
|---|---|---|---|
| 1 | 08/29/19 | SDD | MODIFIED DESIGN ONLY NOTES TO NOTES. |

**UTAH DEPARTMENT OF TRANSPORTATION**

STANDARD DRAWINGS FOR ROAD AND BRIDGE CONSTRUCTION

SALT LAKE CITY, UTAH

RECOMMENDED FOR APPROVAL — AUG. 29, 2019 DATE

CHAIRMAN STANDARDS COMMITTEE APPROVED — AUG. 29, 2019 DATE

DEPUTY DIRECTOR

CAST-IN-PLACE CONCRETE CONSTANT SLOPE BARRIER - 54 INCH, TL-5 1 OF 3

STANDARD DRAWING TITLE

STD. DWG. NO.

BA 3O1

DGN File:L:\Standard_Drawings\Imperial\2017 Approved_Supplemental_Issues\Suppl0 Approved August - 2019\Backup\BA0301.dgn
04-SEP-2019

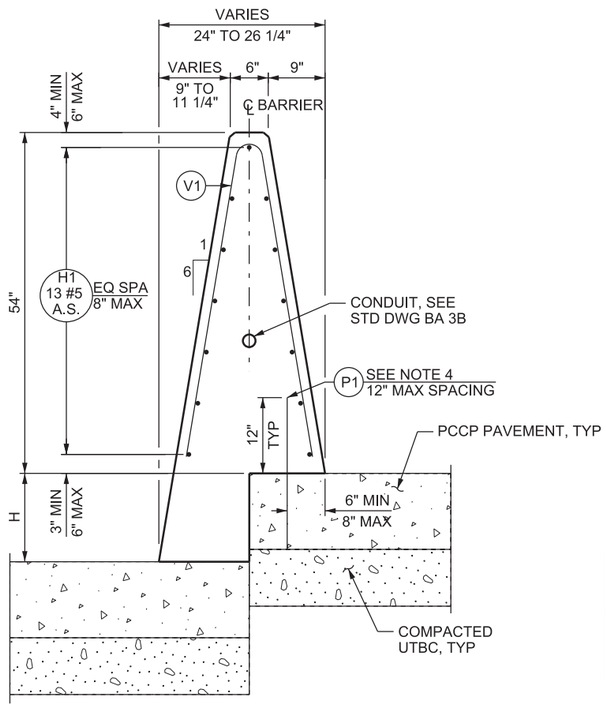


## STEPPED MEDIAN BARRIER - PCCP ONLY

H = 0 INCH TO 14 INCH (OPTION 1)

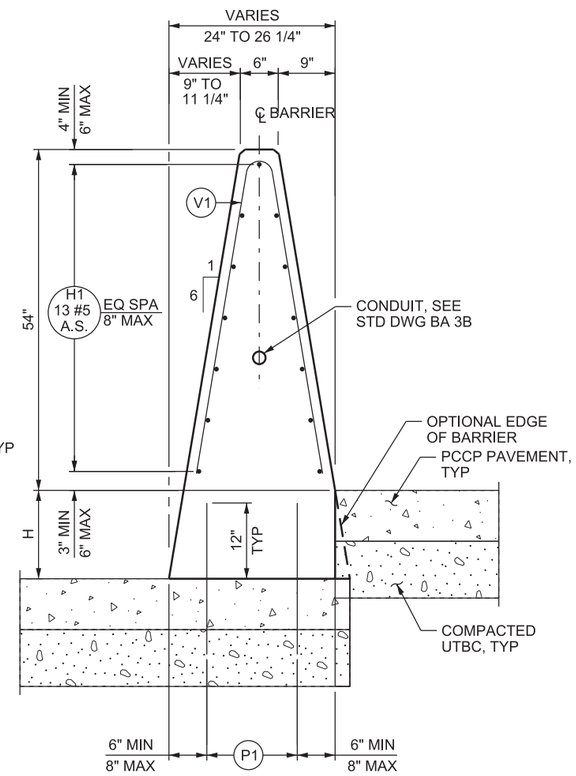


## STEPPED MEDIAN BARRIER - PCCP ONLY

H = 0 INCH TO 14 INCH (OPTION 2)

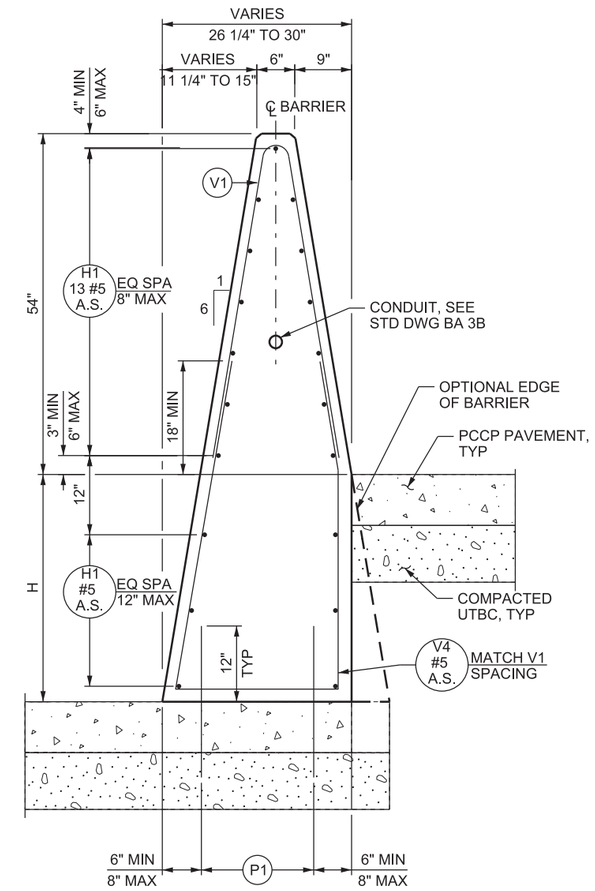


## STEPPED MEDIAN BARRIER - PCCP ONLY

H = 14 INCH TO 36 INCH

**NOTES:**

1. DRILL AND EPOXY BOND P1 BARS OR HAND POSITION WHILE CONCRETE IS IN A WORKABLE FORM WHEN USING PCCP PAVEMENT.
2. V4 BAR SPACING MATCHES V1 SPACING SHOWN IN ELEVATION.
3. DECREASE P1 BAR SPACING BY HALF AS SHOWN ON STD DWG BA 3O1. SEE STEPPED MEDIAN BARRIER DETAILS FOR APPLICABLE LOCATION.
4. DO NOT USE HORIZONTAL CONSTRUCTION JOINTS IN TL-5 BARRIER.
5. DO NOT USE STEPPED MEDIAN BARRIER WITH HMA PAVEMENT.

SUPPLEMENTAL DRAWING

REVISIONS

| NO. | DATE | APPR. | REMARKS |
|---|---|---|---|
| 1 | 08/29/19 | SDD | MODIFIED DESIGN ONLY NOTES TO NOTES. |

**UTAH DEPARTMENT OF TRANSPORTATION**
STANDARD DRAWINGS FOR ROAD AND BRIDGE CONSTRUCTION
SALT LAKE CITY, UTAH

RECOMMENDED FOR APPROVAL — AUG. 29, 2019 DATE
CHAIRMAN STANDARDS COMMITTEE APPROVED — AUG. 29, 2019 DATE
DEPUTY DIRECTOR

CAST-IN-PLACE
CONCRETE CONSTANT
SLOPE BARRIER -
54 INCH, TL-5
2 OF 3

STANDARD DRAWING TITLE

STD. DWG. NO.
BA 3O2

04-SEP-2019 DGN Files:\Standard_Drawings\Imperial\2017 Approved_Supplemental_Issues\Supl0 Approved August - 2019\Backup\1BA0302.dgn

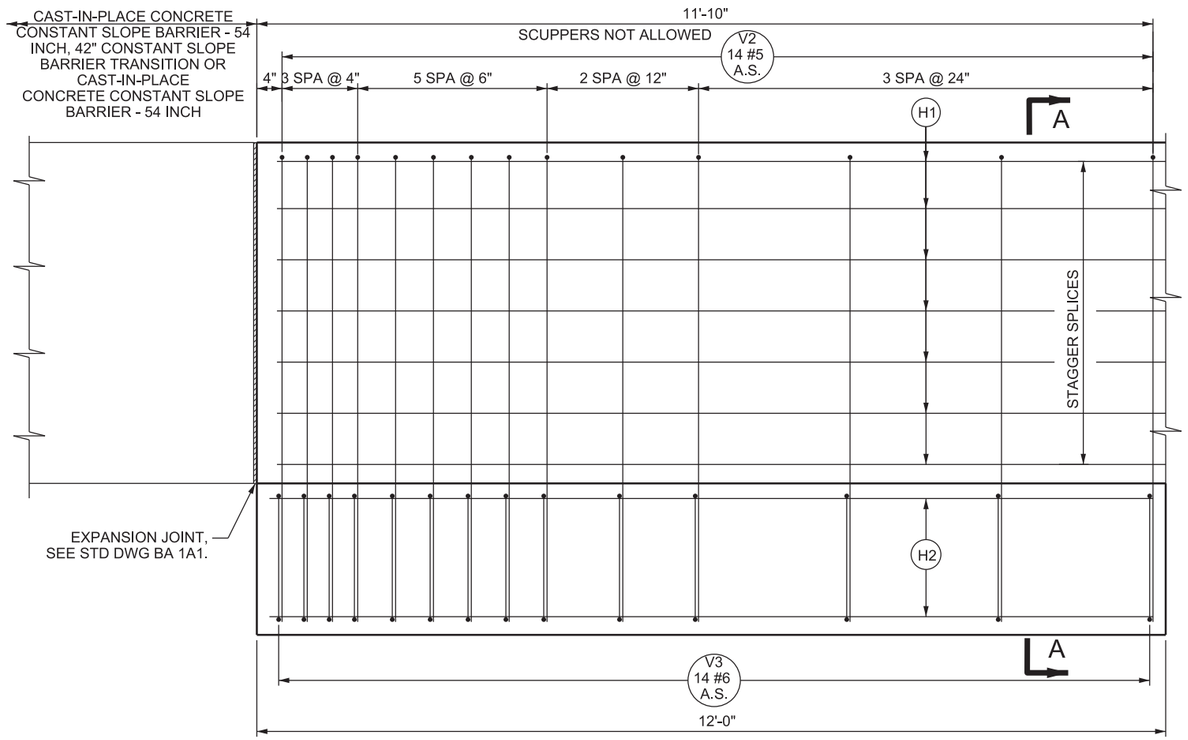


## ELEVATION

BARRIER ON HMA SHOWN
SEE BA O1 FOR BARRIER ON PCCP

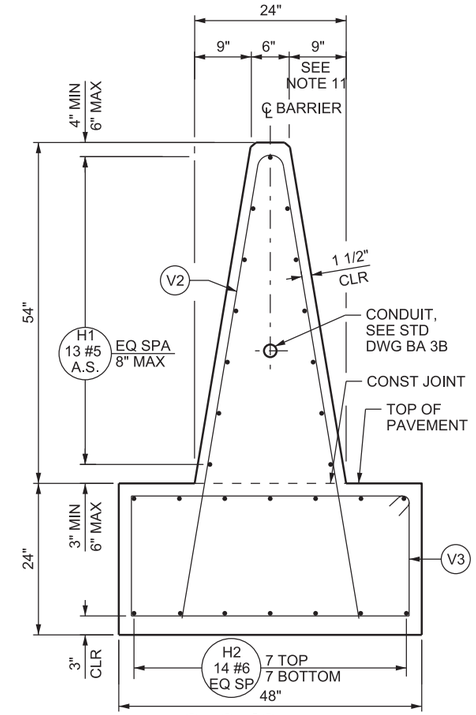


## SECTION A-A

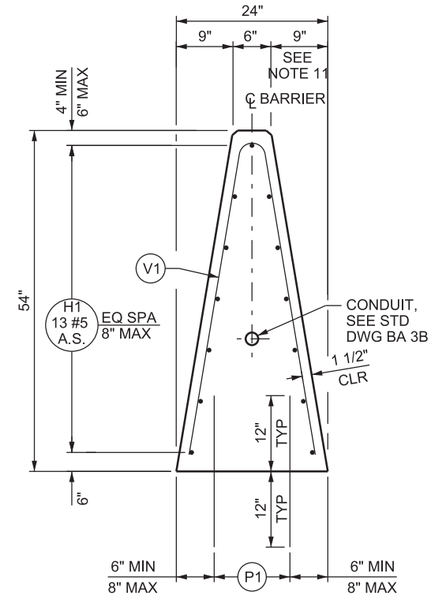


## SECTION B-B

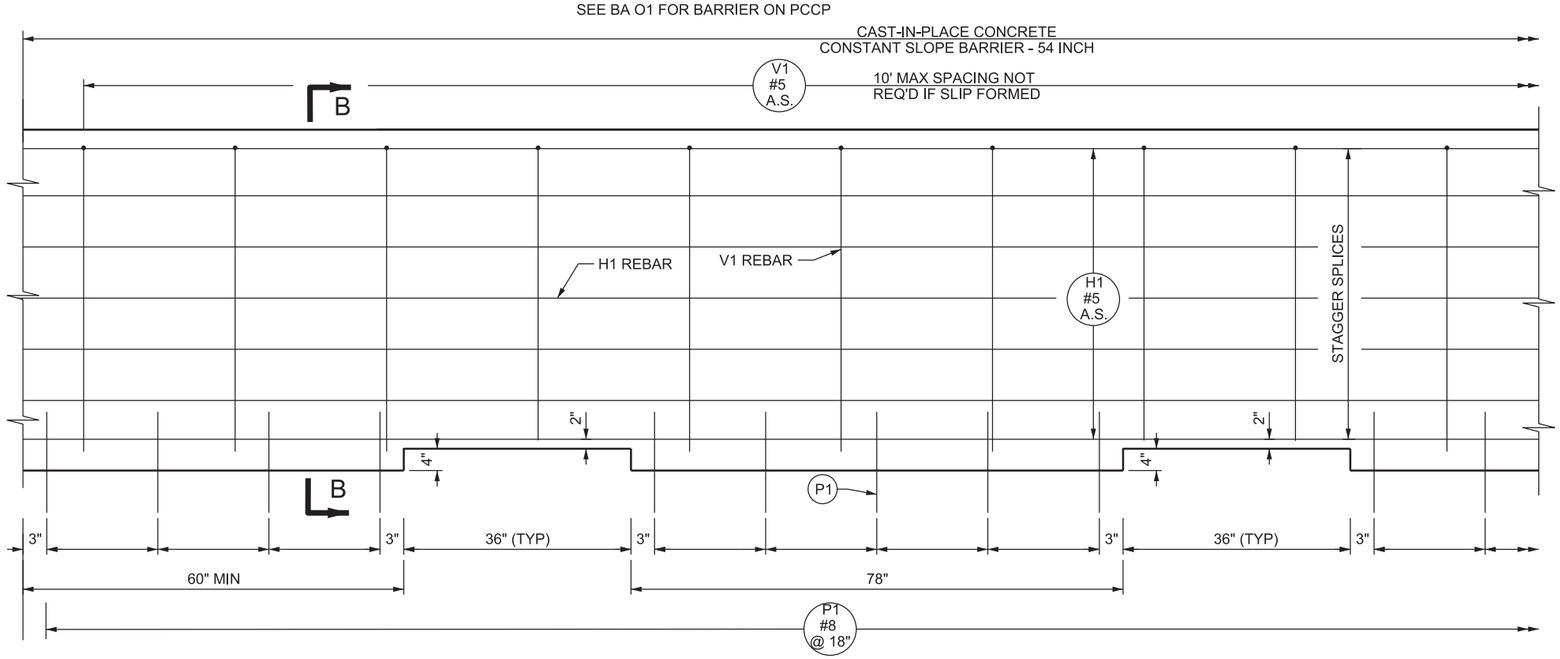


## ELEVATION

**NOTES:**

1. SEE STD DWG BA 1A1 FOR GENERAL NOTES.
2. SEE "BARRIER CONNECTION DETAILS" ON STD DWG BA 1A2 FOR CONNECTION LOOP DETAILS.
3. DRILL AND EPOXY BOND P1 BARS OR HAND POSITION WHILE CONCRETE IS IN A WORKABLE FORM WHEN USING PCCP PAVEMENT.
4. SEE STD DWG BA 3O3 FOR REINFORCING STEEL SCHEDULE AND NOTES.
5. DO NOT USE BARRIER SEAL WHEN SCUPPERS ARE PRESENT ON BARRIER.
6. SEE STD DWG BA 3M2 FOR APPROACH AND TRAILING END TREATMENTS. NO EXPANSION JOINT REQUIRED.
7. THE 9 INCH DIMENSION MAY BE REDUCED TO 7 INCHES AS SHOWN TO PROVIDE A MINIMUM 2 INCH CLEARANCE TO THE COLUMN IN COLUMN PROTECTION APPLICATIONS. ADJUST REINFORCING STEEL TO PROVIDE MINIMUM COVER.

SUPPLEMENTAL DRAWING

REVISIONS

| NO. | DATE | APPR. | REMARKS |
|---|---|---|---|
| 1 | 08/29/19 | SDD | MODIFIED DESIGN ONLY NOTES TO NOTES. |

**UTAH DEPARTMENT OF TRANSPORTATION**
STANDARD DRAWINGS FOR ROAD AND BRIDGE CONSTRUCTION
SALT LAKE CITY, UTAH

RECOMMENDED FOR APPROVAL — AUG. 29, 2019 DATE
CHAIRMAN STANDARDS COMMITTEE APPROVED — AUG. 29, 2019 DATE
DEPUTY DIRECTOR

CAST-IN-PLACE CONCRETE CONSTANT SLOPE BARRIER WITH SCUPPERS- 54 INCH, TL-5
STANDARD DRAWING TITLE

STD. DWG. NO.
BA 3O4

04-SEP-2019 DGN File:L:\Standard.Drawings\Imperial\2017 Approved_Supplemental.Issues\Suppl0 Approved August - 2019\Backup1\BA0304.dgn

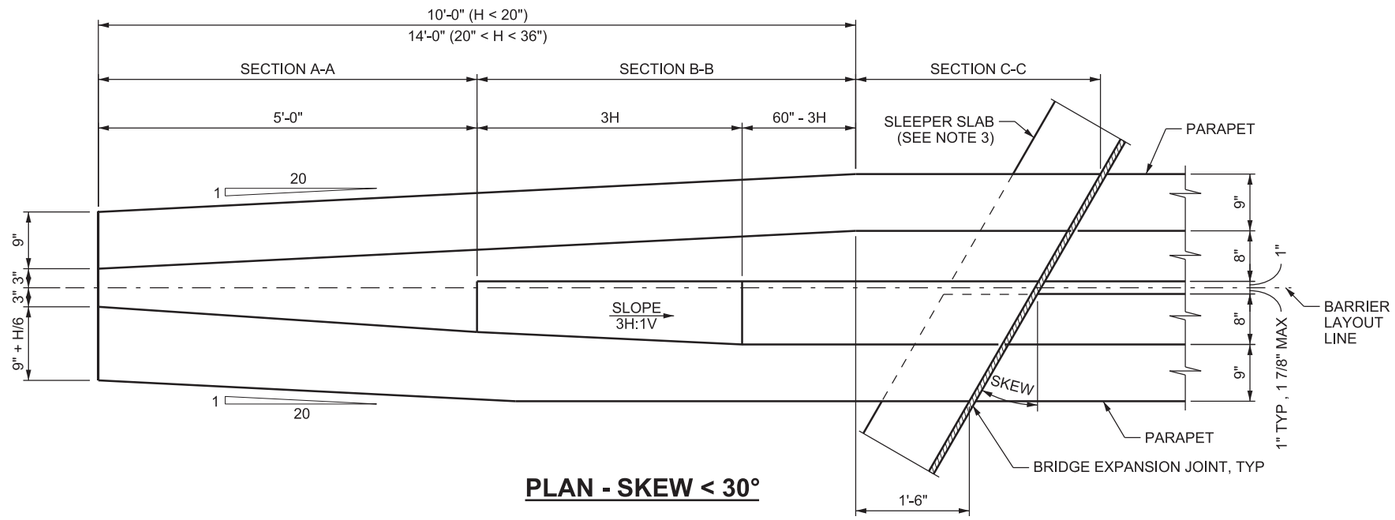


## PLAN - SKEW < 30°

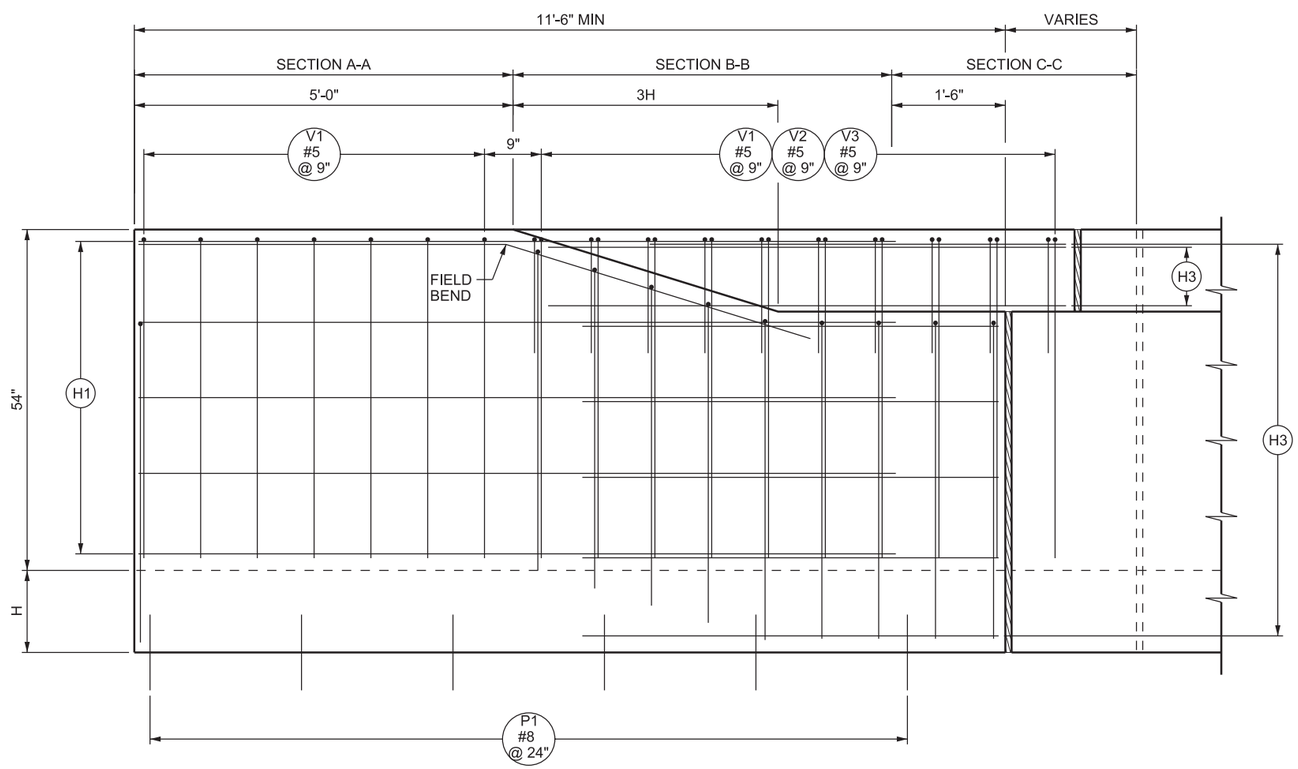


## ELEVATION - SKEW < 30°

**NOTES:**

1. SEE STD DWG BA 1A1 FOR GENERAL NOTES.
2. SEE STD DWG BA 3P3 FOR SECTIONS AND REINFORCING STEEL SCHEDULE.
3. SLEEPER SLAB ENDS AT FACE OF PARAPET FOR H GREATER THAN 14 INCHES.

SUPPLEMENTAL DRAWING

REVISIONS

| NO. | DATE | APPR. | REMARKS |
|---|---|---|---|
| 1 | 08/29/19 | SDD | MODIFIED DESIGN ONLY NOTES TO NOTES. |

**UTAH DEPARTMENT OF TRANSPORTATION**
STANDARD DRAWINGS FOR ROAD AND BRIDGE CONSTRUCTION
SALT LAKE CITY, UTAH

RECOMMENDED FOR APPROVAL — AUG. 29, 2019 DATE
CHAIRMAN STANDARDS COMMITTEE APPROVED — AUG. 29, 2019 DATE
DEPUTY DIRECTOR

CAST-IN-PLACE CONCRETE
CONSTANT SLOPE BARRIER
- 54 INCH, BRIDGE
PARAPET TRANSITION
1 OF 3

STANDARD DRAWING TITLE

STD. DWG. NO.
BA 3P1

04-SEP-2019 DGN File:L:\Standard Drawings\Imperial\2017 Approved_Supplemental Issues\Suppl0 Approved August - 2019\Backup1\BA03P1.dgn

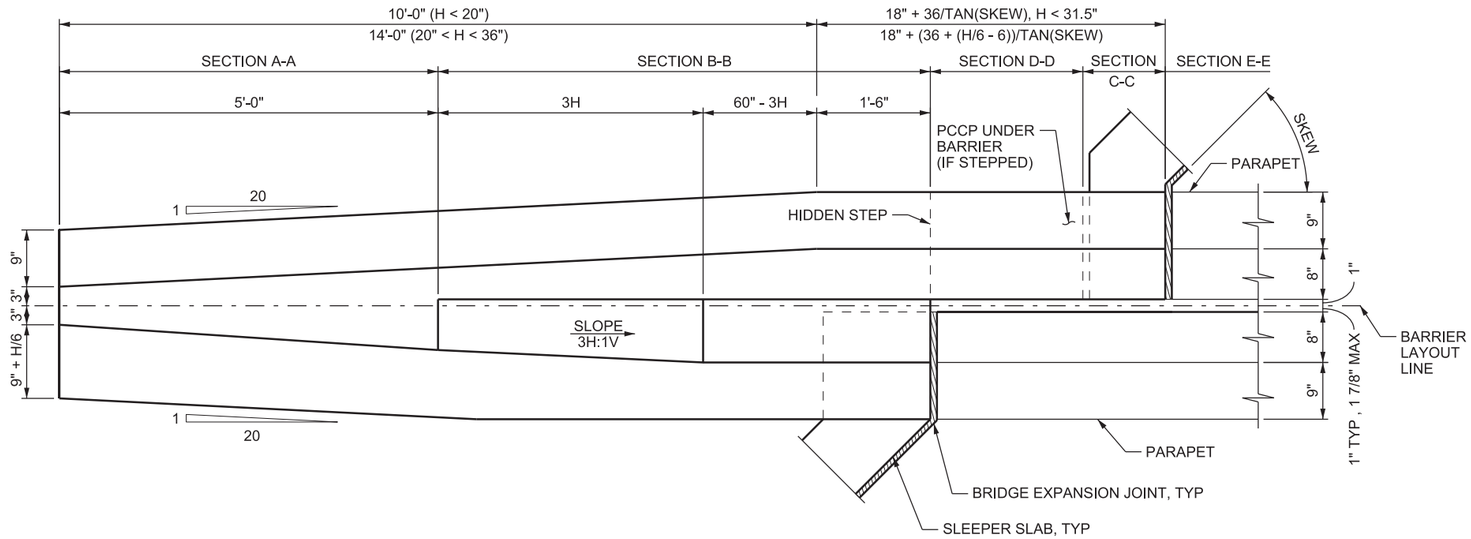


## PLAN - H < 36 INCH, 30° < SKEW < 45°

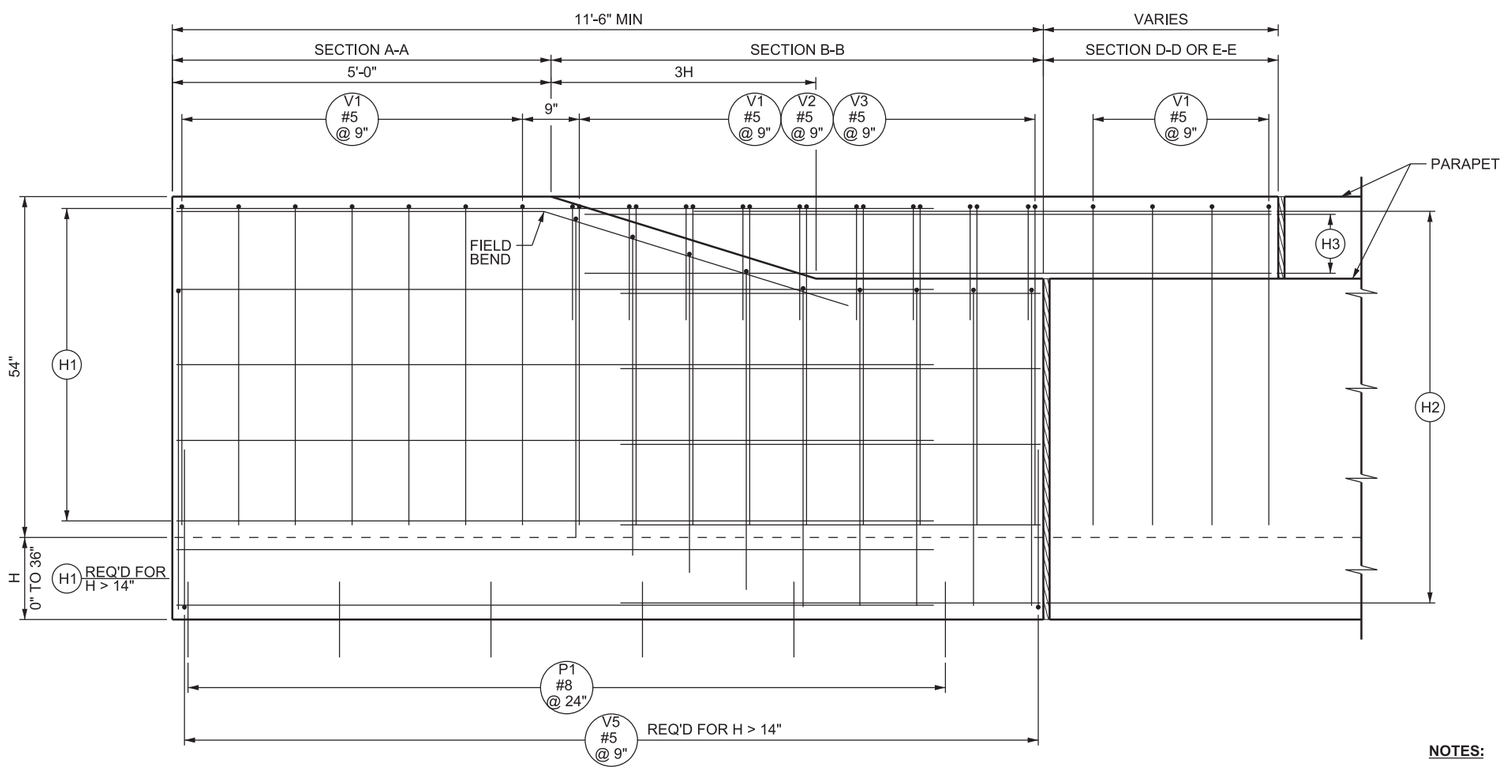


## ELEVATION - H < 36 INCH, 30° < SKEW < 45°

**NOTES:**

1. SEE STD DWG BA 1A1 FOR GENERAL NOTES.
2. SEE STD DWG BA 3P3 FOR SECTIONS AND REINFORCING STEEL SCHEDULE.

SUPPLEMENTAL DRAWING

REVISIONS

| NO. | DATE | APPR. | REMARKS |
|---|---|---|---|
| 1 | 08/29/19 | SDD | MODIFIED DESIGN ONLY NOTES TO NOTES. |

**UTAH DEPARTMENT OF TRANSPORTATION**
STANDARD DRAWINGS FOR ROAD AND BRIDGE CONSTRUCTION
SALT LAKE CITY, UTAH

RECOMMENDED FOR APPROVAL — AUG. 29, 2019 DATE
CHAIRMAN STANDARDS COMMITTEE APPROVED — AUG. 29, 2019 DATE
DEPUTY DIRECTOR

CAST-IN-PLACE CONCRETE CONSTANT SLOPE BARRIER - 54 INCH, BRIDGE PARAPET TRANSITION 2 OF 3

STANDARD DRAWING TITLE

STD. DWG. NO.
BA 3P2

DGN File:L:\Standard Drawings\Imperial\2017 Approved_Supplemental Issues\Suppl0 Approved August - 2019\Backup\BA03P2.dgn
04-SEP-2019

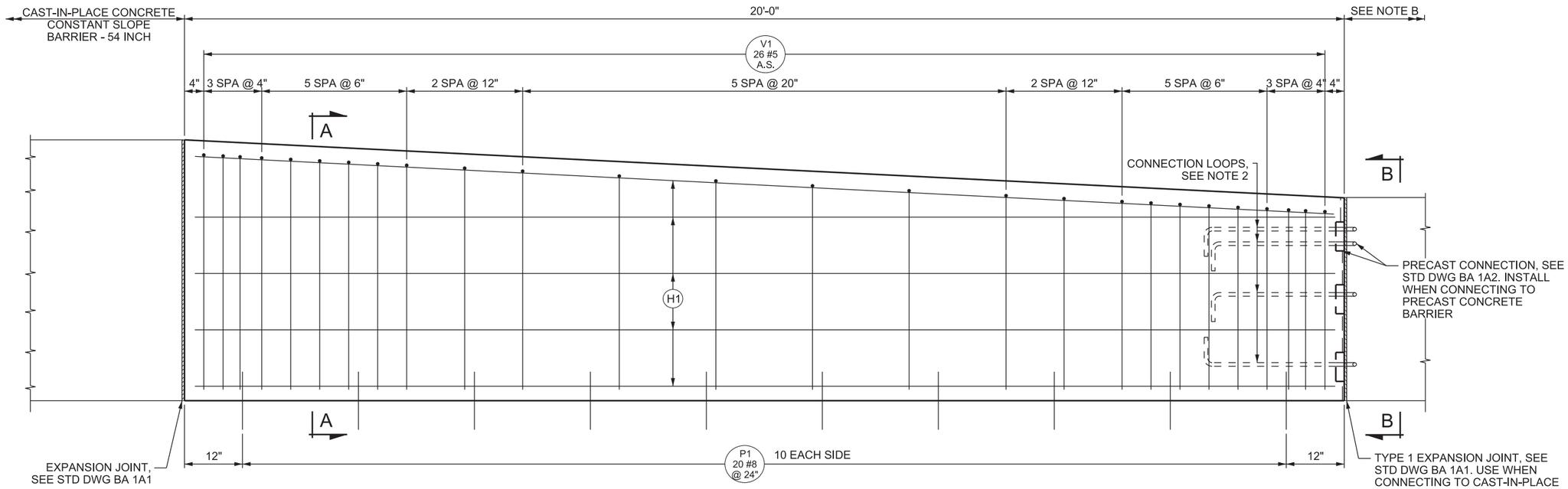


## ELEVATION

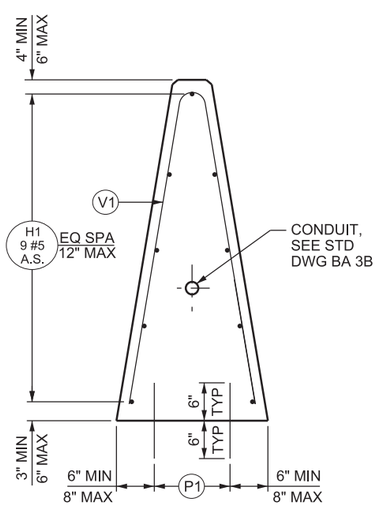


## SECTION A-A

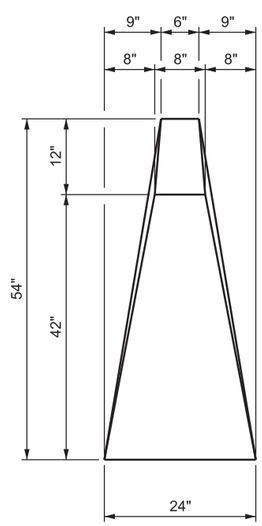


## VIEW B-B

| BAR MARK | BAR SIZE | NO BARS | LOCATION | SKETCH |
|---|---|---|---|---|
| P1 | #8 | 20 | PAVEMENT TO BARRIER (VERTICAL) | 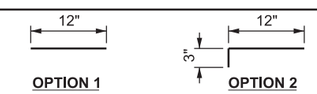  |
| H1 | #5 | 9 | HORIZONTAL IN BARRIER TIED INSIDE V1 BARS | 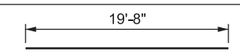  |
| V1 | #5 | 26 | VERTICAL IN BARRIER | 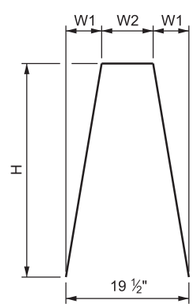  |

| H | W1 | W2 | QTY |
|---|---|---|---|
| 49 1/2" | 8" | 3 1/2" | 1 |
| 49" | 8" | 3 1/2" | 2 |
| 48 1/2" | 8" | 3 1/2" | 2 |
| 48" | 8" | 3 1/2" | 2 |
| 47 1/2" | 8" | 3 1/2" | 1 |
| 47" | 8" | 3 1/2" | 1 |
| 46 1/2" | 8" | 3 1/2" | 1 |
| 46" | 8" | 3 1/2" | 1 |
| 45" | 7 1/2" | 4 1/2" | 1 |
| 44" | 7 1/2" | 4 1/2" | 1 |
| 43" | 7 1/2" | 4 1/2" | 1 |
| 42" | 7 1/2" | 4 1/2" | 1 |
| 41" | 7 1/2" | 4 1/2" | 1 |
| 40 1/2" | 7 1/2" | 4 1/2" | 1 |
| 40" | 7 1/2" | 4 1/2" | 1 |
| 39 1/2" | 7 1/2" | 4 1/2" | 1 |
| 39" | 7 1/2" | 4 1/2" | 1 |
| 39" | 7 1/2" | 5 1/2" | 1 |
| 38 1/2" | 7" | 5 1/2" | 2 |
| 38" | 7" | 5 1/2" | 2 |
| 37 1/2" | 7" | 5 1/2" | 1 |

**NOTES:**

1. SEE STD DWG BA 1A1 FOR GENERAL NOTES.
2. SEE "BARRIER CONNECTION DETAILS" ON STD DWG BA 1A2 FOR CONNECTION LOOP DETAILS. PLACE THE APPROPRIATE CONNECTION LOOP CONFIGURATION THAT CORRESPONDS WITH ADJACENT PRECAST BARRIER.
3. DRILL AND EPOXY BOND P1 BARS, OR HAND POSITION WHILE CONCRETE IS IN A WORKABLE FORM WHEN USING PCCP PAVEMENT.
4. BARRIER TRANSITIONS MAY BE LENGTHENED, WITH ENGINEER'S APPROVAL, TO ELIMINATE A GAP BETWEEN PRECAST AND CAST-IN-PLACE SECTIONS.

SUPPLEMENTAL DRAWING

REVISIONS

| NO. | DATE | APPR. | REMARKS |
|---|---|---|---|
| 1 | 08/29/19 | SDD | MODIFIED DESIGN ONLY NOTES TO NOTES. |

**UTAH DEPARTMENT OF TRANSPORTATION**
STANDARD DRAWINGS FOR ROAD AND BRIDGE CONSTRUCTION
SALT LAKE CITY, UTAH

RECOMMENDED FOR APPROVAL — AUG. 29, 2019 DATE

CHAIRMAN STANDARDS COMMITTEE APPROVED — AUG. 29, 2019 DATE

DEPUTY DIRECTOR

CAST-IN-PLACE CONCRETE CONSTANT SLOPE BARRIER - 54 INCH, 42 INCH CONSTANT SLOPE BARRIER TRANSITION

STANDARD DRAWING TITLE

STD. DWG. NO.

BA 3Q1

04-SEP-2019 DGN File:L:\Standard Drawings\Imperial\2017 Approved_Supplemental Issues\Suppl0 Approved August - 2019\Backup1\BA030i.dgn

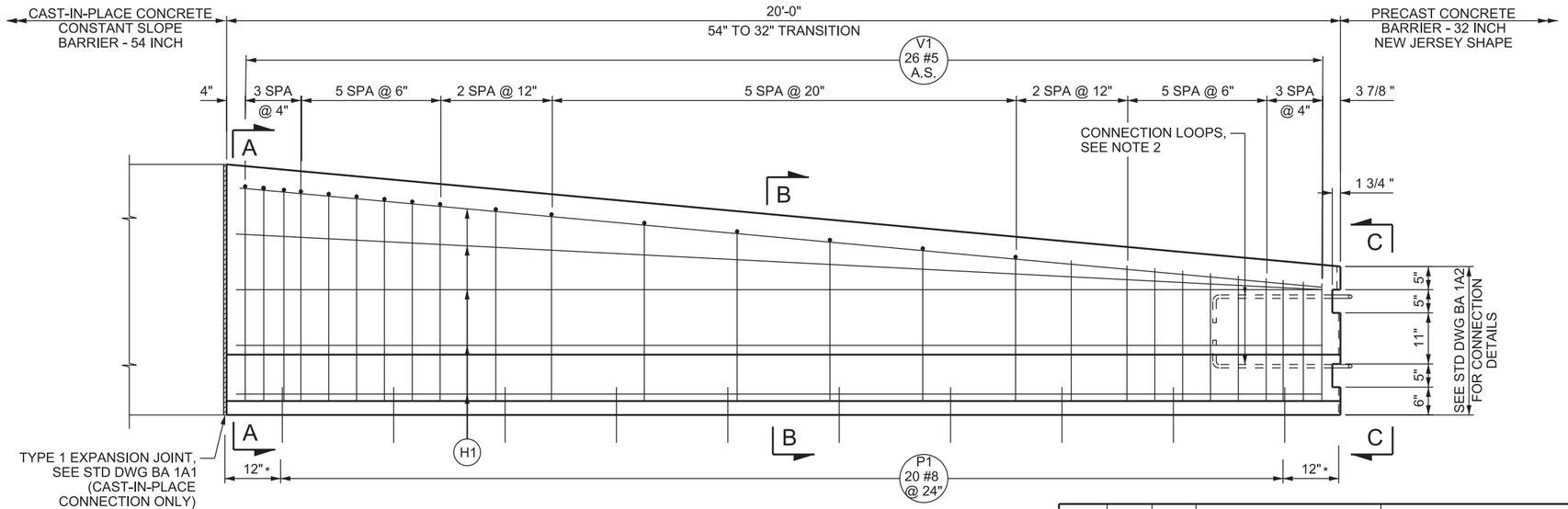


* 24" MAX AT BRIDGE APPROACH SLABS

## ELEVATION

| BAR MARK | BAR SIZE | NO. BARS | LOCATION | SKETCH |
|---|---|---|---|---|
| H1 | #5 | 9 | HORIZONTAL IN BARRIER TIED INSIDE V1 BARS | 19'-6" |
| P1 | #8 | 20 | PAVEMENT TO BARRIER THROUGH LIMITS OF BARRIER (VERTICAL) | 12" OPTION 1; 12", 3" OPTION 2 |
| V1 | #5 | 26 | VERTICAL IN BARRIER | |
| V2 | #5 | 18 | VERTICAL IN BARRIER TIE TO V1 BARS<br>TOTAL LENGTH = 3'-7 1/2" | |

| H | W | QTY |
|---|---|---|
| 46 1/2" | 19 1/2" | 1 |
| 46" | 19 1/2" | 1 |
| 46" | 19" | 1 |
| 45 1/2" | 19" | 1 |
| 45" | 19" | 1 |
| 44 1/2" | 18 1/2" | 1 |
| 44" | 18" | 1 |
| 43 1/2" | 18" | 1 |
| 42 1/2" | 17 1/2" | 1 |
| 41 1/2" | 17" | 1 |
| 40 1/2" | 16 1/2" | 1 |
| 38 1/2" | 15 1/2" | 1 |
| 37" | 15" | 1 |
| 35" | 14" | 1 |
| 33" | 13" | 1 |
| 31 1/2" | 12" | 1 |
| 30" | 11 1/2" | 1 |
| 29" | 11" | 1 |
| 28 1/2" | 11" | 1 |
| 28" | 10 1/2" | 1 |
| 27 1/2" | 10" | 1 |
| 27" | 10" | 1 |
| 26 1/2" | 9 1/2" | 1 |
| 26" | 9 1/2" | 1 |
| 25 1/2" | 9" | 1 |
| 25" | 9" | 1 |

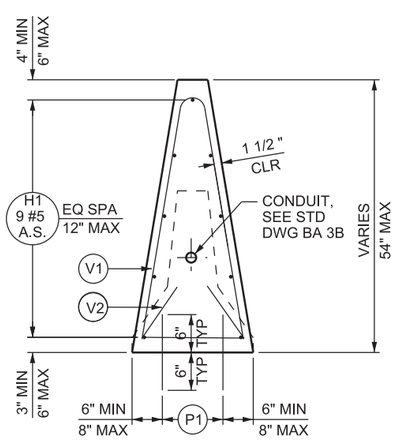


## SECTION A-A

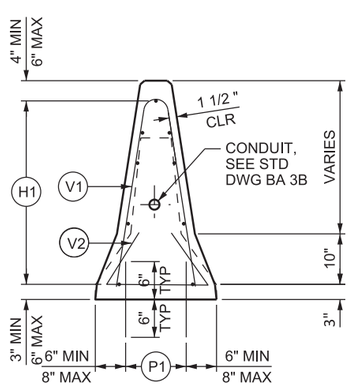


## SECTION B-B

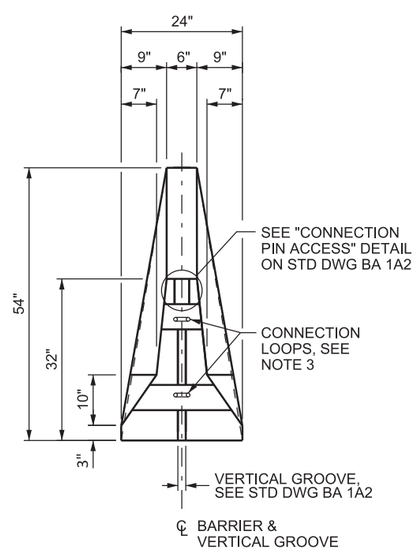


## VIEW C-C

**NOTES**

1. SEE STD DWG BA 1A1 FOR GENERAL NOTES.
2. SEE "BARRIER CONNECTION DETAILS" ON STD DWG BA 1A2 FOR CONNECTION LOOP DETAILS. PLACE THE APPROPRIATE CONNECTION LOOP CONFIGURATION THAT CORRESPONDS WITH ADJACENT PRECAST BARRIER.
3. BARRIER SHAPE VARIES LINEARLY OVER LENGTH OF BARRIER TRANSITION.
4. BARRIER TRANSITIONS MAY BE LENGTHENED, WITH ENGINEER'S APPROVAL, TO ELIMINATE A GAP BETWEEN PRECAST AND CAST-IN-PLACE SECTIONS.
5. DRILL AND EPOXY BOND P1 BARS OR HAND POSITION WHILE CONCRETE IS IN A WORKABLE FORM WHEN USING PCCP PAVEMENT.
6. THE ENGINEER APPROVES CONTRACTOR DEVISED METHOD OF POSITIONING THE LONGITUDINAL REINFORCING STEEL ±1/2 INCH AS DIMENSIONED.

SUPPLEMENTAL DRAWING

REVISIONS

| NO. | DATE | APPR. | REMARKS |
|---|---|---|---|
| 1 | 08/29/19 | SDD | MODIFIED DESIGN ONLY NOTES TO NOTES. |

UTAH DEPARTMENT OF TRANSPORTATION
STANDARD DRAWINGS FOR ROAD AND BRIDGE CONSTRUCTION
SALT LAKE CITY, UTAH

RECOMMENDED FOR APPROVAL — AUG. 29, 2019 DATE
CHAIRMAN STANDARDS COMMITTEE APPROVED — AUG. 29, 2019 DATE
DEPUTY DIRECTOR — DATE

CAST-IN-PLACE CONCRETE CONSTANT SLOPE BARRIER - 54 INCH, 32 INCH NEW JERSEY SHAPE BARRIER TRANSITION

STANDARD DRAWING TITLE

STD. DWG. NO.
BA 3Q2

04-SEP-2019 DGN File:L:\Standard_Drawings\Imperial\2017 Approved_Supplemental_Issues\Suppl0 Approved August - 2019\Backup1\BA03Q2.dgn

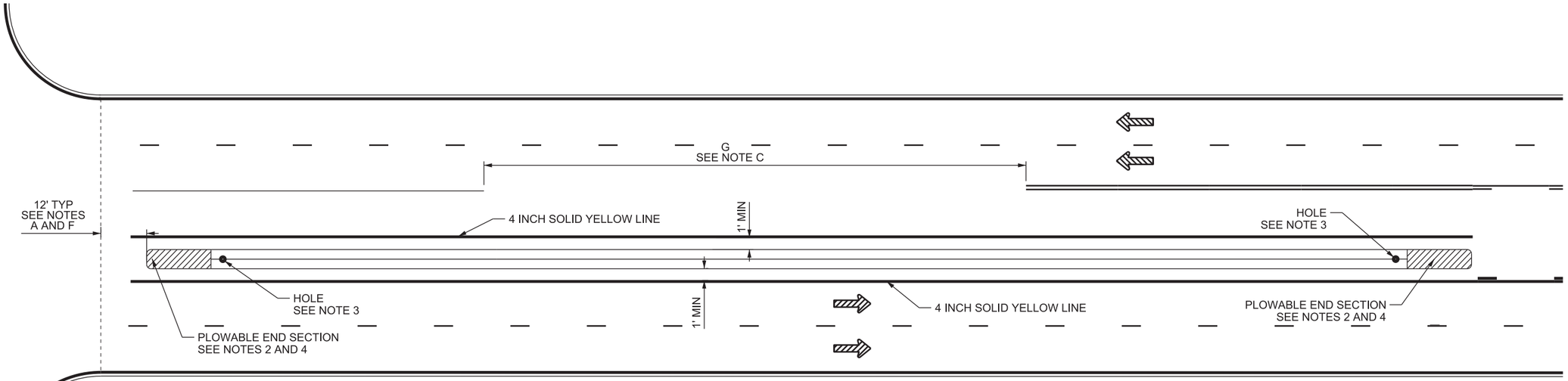


## ISLAND WITHOUT CROSSWALK, STOP OR YIELD LINE
## DETAIL GW 1A-1

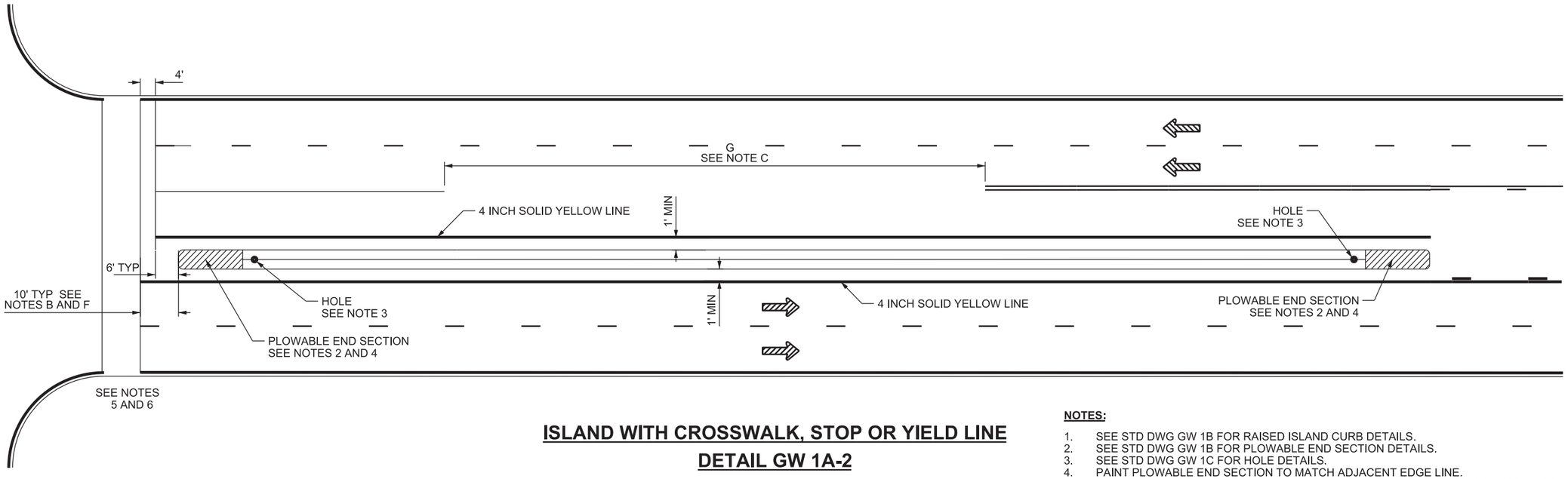


## ISLAND WITH CROSSWALK, STOP OR YIELD LINE
## DETAIL GW 1A-2

**NOTES:**

1. SEE STD DWG GW 1B FOR RAISED ISLAND CURB DETAILS.
2. SEE STD DWG GW 1B FOR PLOWABLE END SECTION DETAILS.
3. SEE STD DWG GW 1C FOR HOLE DETAILS.
4. PAINT PLOWABLE END SECTION TO MATCH ADJACENT EDGE LINE.
5. SEE STD DWG ST 1 FOR STANDARD CROSSWALK, STOP AND YIELD LINE MARKINGS.
6. SEE STD DWG ST 1 FOR SCHOOL CROSSWALK, STOP AND YIELD LINE MARKINGS.

**DESIGN-ONLY NOTES:**

A. PLACE ISLAND IN RELATION TO PC/PT OF CURB SHOULDER.
B. PLACE ISLAND IN RELATION TO CROSSWALK, STOP OR YIELD LINE.
C. SEE UDOT ROADWAY DESIGN MANUAL DM DRAWINGS FOR GAP LENGTH.
D. LENGTH OF ISLAND DETERMINED BY REGION TRAFFIC ENGINEER.
E. SEE UDOT ROADWAY DESIGN MANUAL DM DRAWINGS FOR PAVEMENT MARKING DETAILS.
F. SETBACK FOR BEGINNING OF PLOWABLE END SECTION MAY INCREASE FOR SITE SPECIFIC APPLICATIONS.

SUPPLEMENTAL DRAWING

REVISIONS

| NO. | DATE | APPR. | REMARKS |
|---|---|---|---|
| 1 | 8/29/19 | MRB | REVISED REFERENCES FOR THE ST SERIES STANDARD DRAWINGS |

**UTAH DEPARTMENT OF TRANSPORTATION**
STANDARD DRAWINGS FOR ROAD AND BRIDGE CONSTRUCTION
SALT LAKE CITY, UTAH

RECOMMENDED FOR APPROVAL — AUG. 29, 2019 DATE
CHAIRMAN STANDARDS COMMITTEE APPROVED — AUG. 29, 2019 DATE
DEPUTY DIRECTOR

STANDARD DRAWING TITLE
RAISED ISLAND

STD. DWG. NO.
GW 1A

04-SEP-2019 DGN File:L:\Standard_Drawings\Imperial\2017 Approved_Supplemental_Issues\Suppl0 Approved August - 2019\Backup\GW01A.DGN

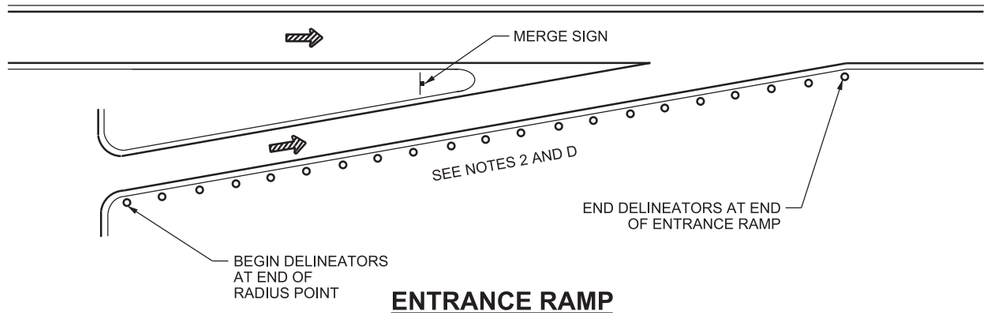


## ENTRANCE RAMP

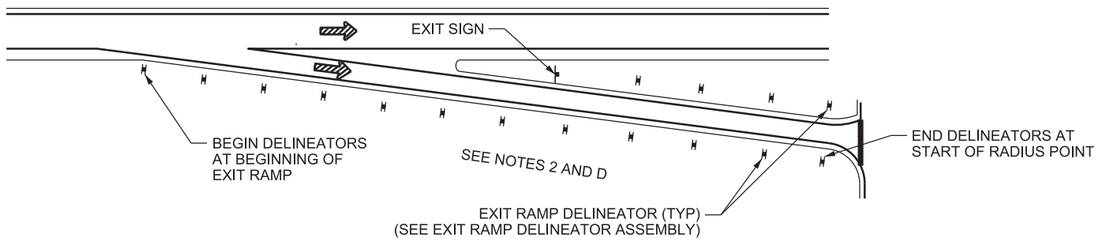


## EXIT RAMP

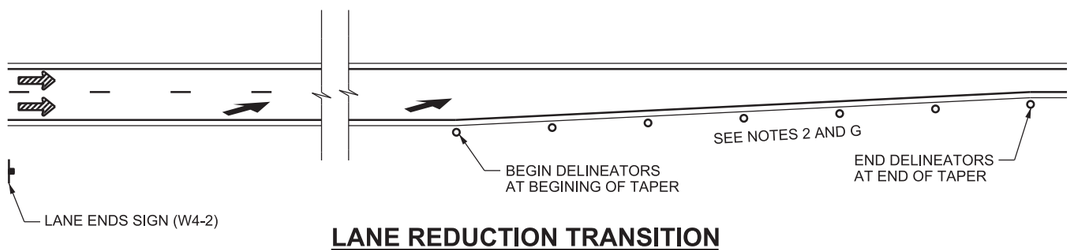


## LANE REDUCTION TRANSITION

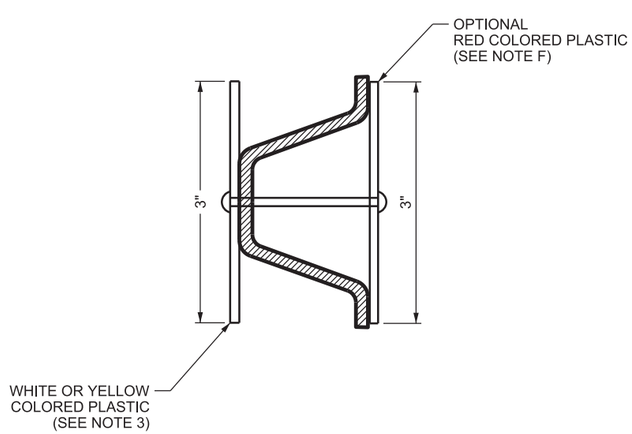


## EXIT RAMP DELINEATOR ASSEMBLY

USE FOR 2 LB/FT POST WITH COLORED PLASTIC ATTACHED

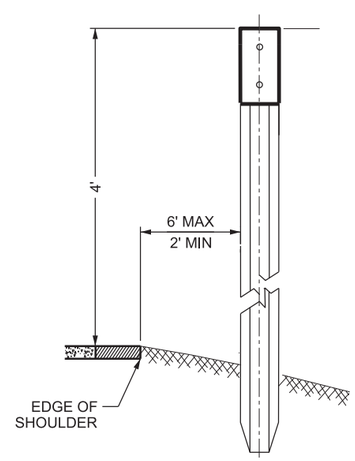


## DELINEATOR

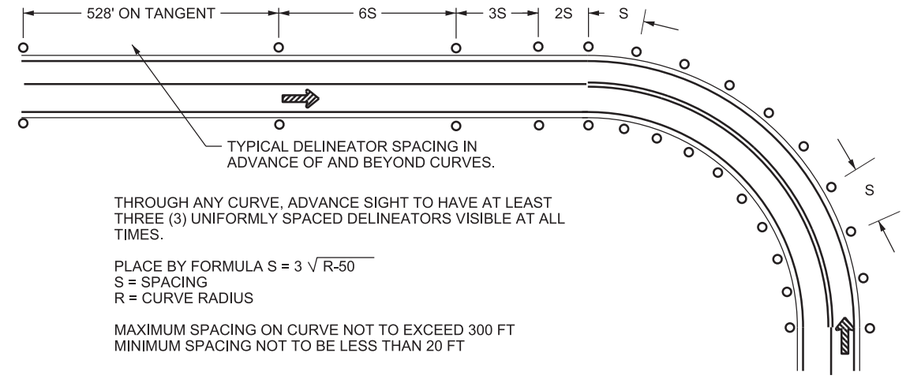


THROUGH ANY CURVE, ADVANCE SIGHT TO HAVE AT LEAST THREE (3) UNIFORMLY SPACED DELINEATORS VISIBLE AT ALL TIMES.

PLACE BY FORMULA $S = 3\sqrt{R-50}$
S = SPACING
R = CURVE RADIUS

MAXIMUM SPACING ON CURVE NOT TO EXCEED 300 FT
MINIMUM SPACING NOT TO BE LESS THAN 20 FT

## DELINEATOR SPACING FORMULA

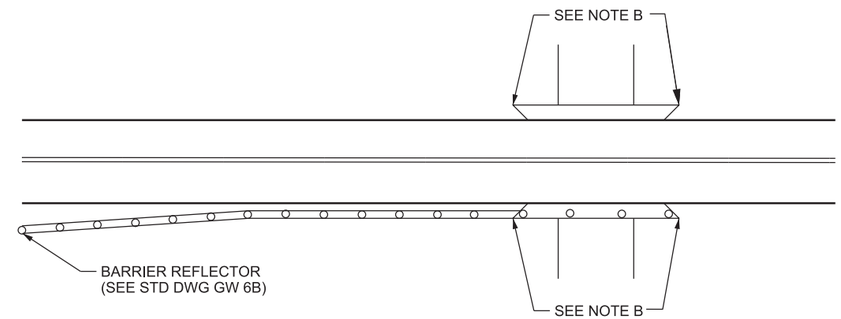


## BARRIER REFLECTOR DETAIL

(SEE NOTE A)

**NOTES:**

1. BARRIERS ARE DEFINED AS BEING GUARDRAIL, CONCRETE BARRIER, AND BRIDGE PARAPET WALL.
2. USE CONSISTENT MOUNTING HEIGHT AT EACH LOCATION.
3. MATCH REFLECTOR COLOR TO THE ADJACENT PAVEMENT MARKING LINE COLOR. INSTALL THE YELLOW OR WHITE REFLECTORS ON POSTS TO FACE TRAFFIC.

**DESIGN-ONLY NOTES:**

A. SPACE BARRIER REFLECTORS A MAXIMUM 100 FT IN PERMANENT APPLICATIONS AND 50 FT FOR TEMPORARY APPLICATIONS. REFLECTOR COLOR TO MATCH THE ADJACENT PAVEMENT MARKING LINE.

B. INSTALL APPROPRIATE OBJECT MARKER OM3-R (OR L OR C) IN PLACE OF DELINEATOR AT LEADING EDGE OF BRIDGE PARAPET OR HEADWALL IF GUARDRAIL IS NOT PRESENT.

C. CHEVRON ALIGNMENT (W1-8) SIGNS MAY BE USED WHEN ADDITIONAL EMPHASIS AND GUIDANCE FOR A CHANGE IN HORIZONTAL ALIGNMENT IS NEEDED. THE W1-8 SIGN MAY BE USED TO SUPPLEMENT STANDARD DELINEATORS ON CURVES. THE W1-8 SIGN MAY BE USED TO SUPPLEMENT OR AS AN ALTERNATE TO THE LARGE ARROW (W1-6) SIGN. SEE STD DWG SN 7 FOR CHEVRON ALIGNMENT SIGN DETAILS.

D. SPACE TYPE II DELINEATORS AT 300 FT ON TANGENTS ALONG ALL ENTRANCE AND EXIT RAMPS AS SHOWN. USE DELINEATOR SPACING FORMULA FOR ALL RAMP CURVES.

E. USE DELINEATORS ON THE LEFT SIDE OF ENTRANCE AND EXIT RAMPS FOR RIGHT HAND CURVES UPON APPROVAL OF THE REGION TRAFFIC ENGINEER.

F. RED REFLECTORS MAY BE INSTALLED ON BACK SIDES OF DELINEATOR POSTS IN AREAS WHERE WRONG WAY DRIVERS ARE OF CONCERN.

G. SPACE 7 TYPE I DELINEATORS EQUALLY SPACED THROUGH LENGTH OF LANE REDUCTION TAPER.

SUPPLEMENTAL DRAWING

REVISIONS

| NO. | DATE | APPR. | REMARKS |
|---|---|---|---|
| 1 | 8/29/19 | MRB | ADDED DELINEATOR PLACEMENT DETAIL FOR LANE REDUCTIONS |

**UTAH DEPARTMENT OF TRANSPORTATION**
STANDARD DRAWINGS FOR ROAD AND BRIDGE CONSTRUCTION
SALT LAKE CITY, UTAH

RECOMMENDED FOR APPROVAL — AUG. 29, 2019 DATE
CHAIRMAN STANDARDS COMMITTEE APPROVED — AUG. 29, 2019 DATE
DEPUTY DIRECTOR — DATE

STANDARD DRAWING TITLE: DELINEATION APPLICATION

STD. DWG. NO. GW 7A

DGN File:L:\Standard_Drawings\Imperial\2017 Approved_Supplemental_Issues\Suppl0 Approved August - 2019\Backup1\GW07A.DGN
04-SEP-2019

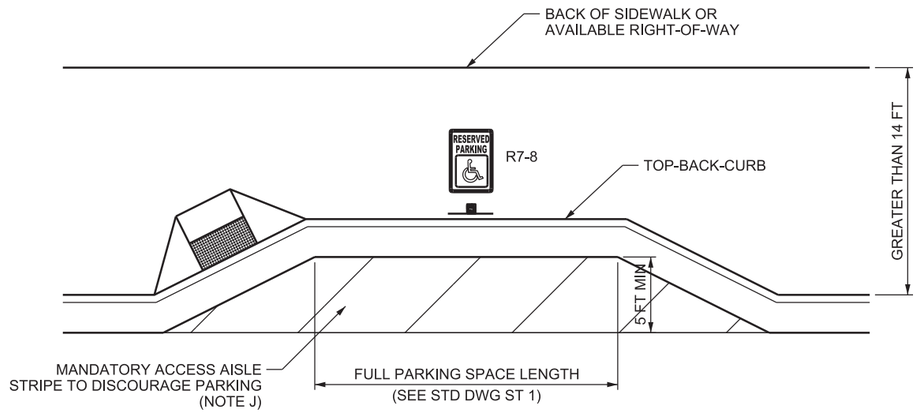


## ON-STREET ACCESS AISLE

NOTES I AND J

PROWAG R214

| ACCESSIBLE ON-STREET PARKING | |
|---|---|
| **TOTAL SPACES ON THE BLOCK PERIMETER** | **MIN REQUIRED ACCESSIBLE SPACES** |
| 1 TO 25 | 1 |
| 26 TO 50 | 2 |
| 51 TO 75 | 3 |
| 76 TO 100 | 4 |
| 101 TO 150 | 5 |
| 151 TO 200 | 6 |
| OVER 200 | 4% OF TOTAL |

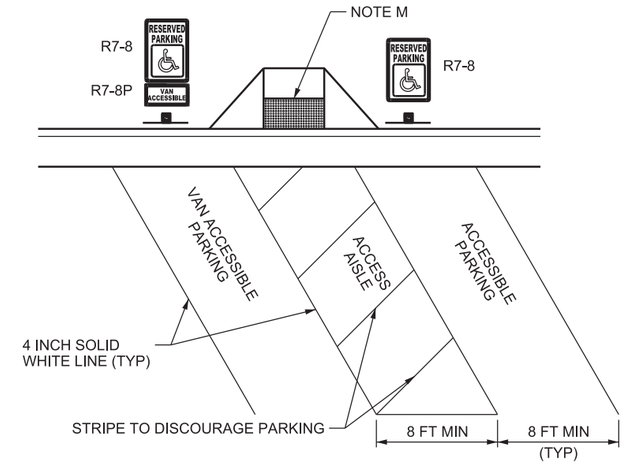


## RESERVED ACCESSIBLE PARKING

NOTES:
1. PROVIDE ONE VAN ACCESSIBLE STALL FOR EVERY EIGHT ACCESSIBLE STALLS.
2. REFER TO LOCAL JURISDICTION FOR NUMBER OF STALLS, ANGLE, STALL DEPTHS, MANUEVERING AISLE WIDTHS, AND ANY OTHER REQUIREMENTS.

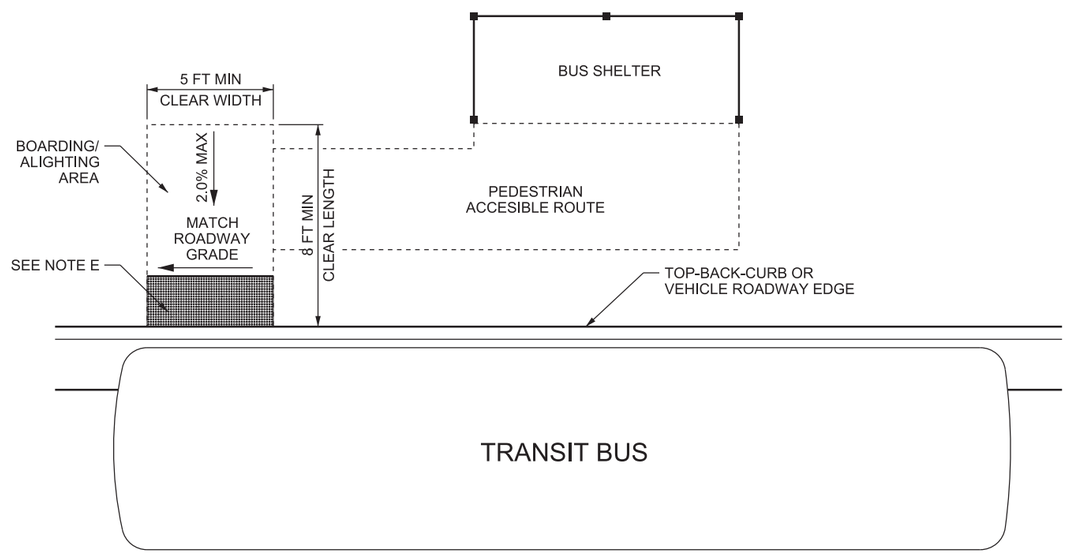


## TRANSIT SHELTER DETAIL

(BUS SHOWN FOR ILLUSTRATION, RAIL SIMILAR)
PROWAG R306

**DESIGN NOTES:**

A. PROVIDE A CONTINUOUS AND DETECTABLE EDGE TREATMENT ALONG THE STREET SIDE OF THE SIDEWALK AT ROUNDABOUTS, WHERE SIDEWALKS ARE FLUSH AGAINST THE CURB AND PEDESTRIAN STREET CROSSING IS NOT INTENDED. DO NOT USE DETECTABLE WARNING SURFACES FOR EDGE TREATMENT. PROVIDE A BOTTOM EDGE 15 IN MAXIMUM ABOVE THE SIDEWALK WHERE CHAINS, FENCING, OR RAILINGS ARE USED FOR EDGE TREATMENT. (PROWAG R306.3.1)

B. PROVIDE A PEDESTRIAN ACTIVATED SIGNAL FOR EACH MULTI-LANE SEGMENT OF EACH PEDESTRIAN STREET CROSSING, INCLUDING THE SPLITTER ISLAND AT ROUNDABOUTS WITH MULTI-LANE PEDESTRIAN STREET CROSSINGS. CLEARLY IDENTIFY WHICH PEDESTRIAN STREET CROSSING SEGMENT THE SIGNAL SERVES. (PROWAG R306.3.2)

C. PROVIDE PEDESTRIAN ACTIVATED SIGNALS AT PEDESTRIAN STREET CROSSINGS AT MULTI-LANE CHANNELIZED TURN LANES AT SIGNALIZED INTERSECTIONS OTHER THAN ROUNDABOUTS WITH PEDESTRIAN STREET CROSSINGS.

D. THE BOARDING AND ALIGHTING AREA CAN BE LOCATED EITHER WITHIN OR OUTSIDE OF THE SHELTER, WHERE A TRANSIT SHELTER IS PROVIDED. (PROWAG R308.1.1)

E. PLACE DETECTABLE WARNING SURFACES ON BOARDING PLATFORMS AT TRANSIT STOPS FOR BUSES AND RAIL VEHICLES WHERE THE EDGES OF THE BOARDING PLATFORM ARE NOT PROTECTED BY SCREENS OR GUARDS. (PROWAG R208)

F. COORDINATE THE HEIGHT OF VEHICLE FLOOR AND THE STATION PLATFORM SO AS TO MINIMIZE THE VERTICAL AND HORIZONTAL GAPS PER U.S.D.O.T. REGULATIONS (49 CFR PARTS 37 AND 38). (PROWAG R308.1.2.1)

G. IDENTIFY ACCESSIBLE PARKING SPACES BY SIGNS (MUTCD R7-8 SERIES). ACCESSIBLE PARKING SPACES SHOULD BE LOCATED WHERE THE STREET HAS THE LEAST CROWN AND GRADE AND CLOSE TO KEY DESTINATIONS. (PROWAG R309.1)

H. COUNT EACH 20.0 FT OF BLOCK PERIMETER WHERE PARKING IS PERMITTED AS ONE PARKING SPACE WHERE PARKING PAY STATIONS ARE PROVIDED AND THE PARKING IS NOT MARKED. (PROWAG R214)

I. DO NOT ENCROACH ON THE VEHICULAR TRAVEL LANE WITH THE ACCESS AISLE. THE ACCESS AISLE CAN BE ON EITHER THE DRIVER OR PASSENGER SIDE OF THE VEHICLE. (PROWAG R309.2.1)

J. AN ACCESS AISLE IS NOT REQUIRED WHERE:
- NO WORK IS BEING DONE ON THE STREET OR SIDEWALK ADJACENT TO THE PARKING SPACES OR
- THE WIDTH OF THE SIDEWALK OR THE AVAILABLE RIGHT-OF-WAY IS LESS THAN OR EQUAL TO 14.0 FT
LOCATE THE ACCESSIBLE PARKING SPACES AT THE END OF THE BLOCK FACE WHERE AN ACCESS AISLE IS NOT REQUIRED. (PROWAG R309.2.1.1, R309.2.2)

K. VERIFY THE SIDEWALK ADJACENT TO ACCESSIBLE PARALLEL PARKING SPACES IS FREE OF SIGNS, STREET FURNITURE, AND OTHER OBSTRUCTIONS TO PERMIT DEPLOYMENT OF A VAN SIDE-LIFT OR RAMP OR THE VEHICLE OCCUPANT TO TRANSFER TO A WHEELCHAIR OR SCOOTER. (PROWAG R309.2)

L. PROVIDE AN ACCESS AISLE 8.0 FT WIDE MINIMUM STREET LEVEL THE FULL LENGTH OF THE PARKING SPACE, CONNECTED TO A PEDESTRIAN ACCESS ROUTE MARK SO AS TO DISCOURAGE PARKING IN THE ACCESS AISLE WHERE PERPENDICULAR OR ANGLED PARKING IS USED. TWO PARKING SPACES ARE PERMITTED TO SHARE A COMMON ACCESS AISLE. CONNECT THE ACCESS AISLE TO THE PEDESTRIAN ACCESS ROUTE WITH CURB RAMPS OR BLENDED TRANSITIONS. DO NOT LOCATE CURB RAMPS WITHIN THE ACCESS AISLE. (PROWAG R309.3, R309.4)

M. DETECTABLE WARNING SURFACES ARE NOT REQUIRED ON CURB RAMPS AND BLENDED TRANSITIONS THAT CONNECT THE ACCESS AISLE TO THE SIDEWALK, INCLUDING WHERE THE SIDEWALK IS AT THE SAME LEVEL AS THE PARKING SPACES, UNLESS THE CURB RAMPS AND BLENDED TRANSITIONS ALSO SERVE PEDESTRIAN STREET CROSSINGS. (PROWAG R309.4)

SUPPLEMENTAL DRAWING

REVISIONS

| NO. | DATE | APPR. | REMARKS |
|---|---|---|---|
| 1 | 2/22/18 | CGW | NEW DRAWING |
| 2 | 8/29/19 | MRB | REVISED REFERENCE TO ST DRAWING |

**UTAH DEPARTMENT OF TRANSPORTATION**
STANDARD DRAWINGS FOR ROAD AND BRIDGE CONSTRUCTION
SALT LAKE CITY, UTAH

RECOMMENDED FOR APPROVAL — AUG. 29, 2019 DATE
CHAIRMAN STANDARDS COMMITTEE APPROVED — AUG. 29, 2019 DATE
DEPUTY DIRECTOR

ROUNDABOUT, TRANSIT SHELTER, AND ON-STREET PARKING
STANDARD DRAWING TITLE

STD. DWG. NO.
PA 6

04-SEP-2019 DGN File:L:\Standard Drawings\Imperial\2017 Approved_Supplemental_Issues\Suppl0 Approved August - 2019\Backup1\PA 06.dgn

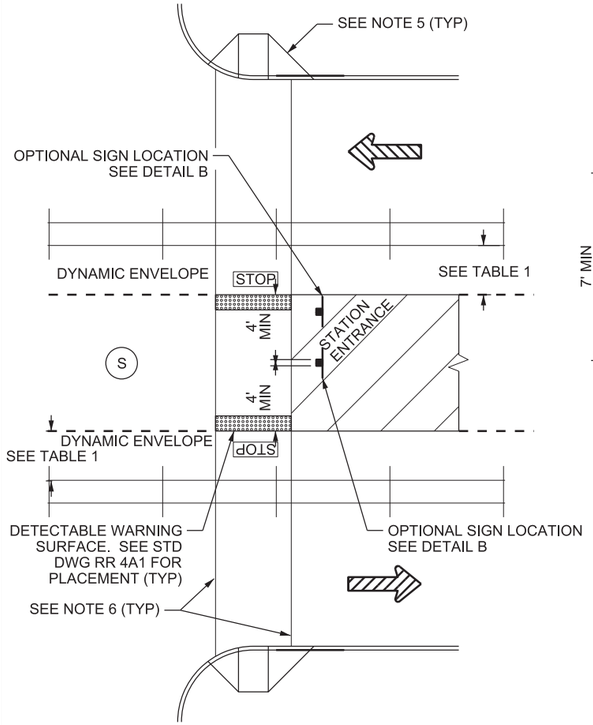


## BLANK-OUT SIGNS AT STATION ENTRANCES (PLAN) DETAIL A

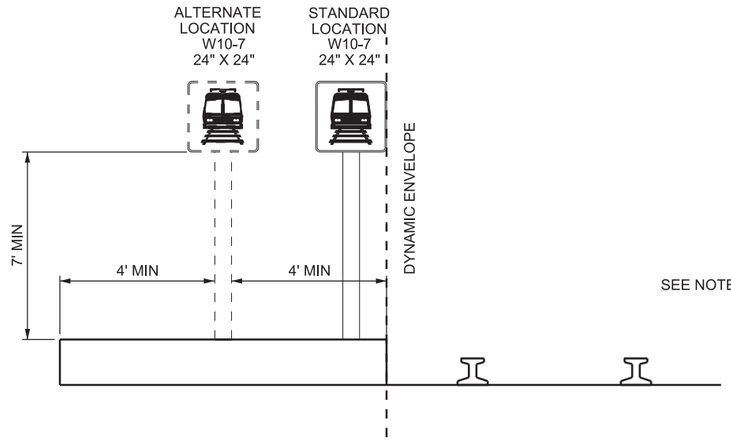


## BLANK-OUT SIGN AT STATION ENTRANCE (PROFILE) DETAIL B

SEE NOTE B

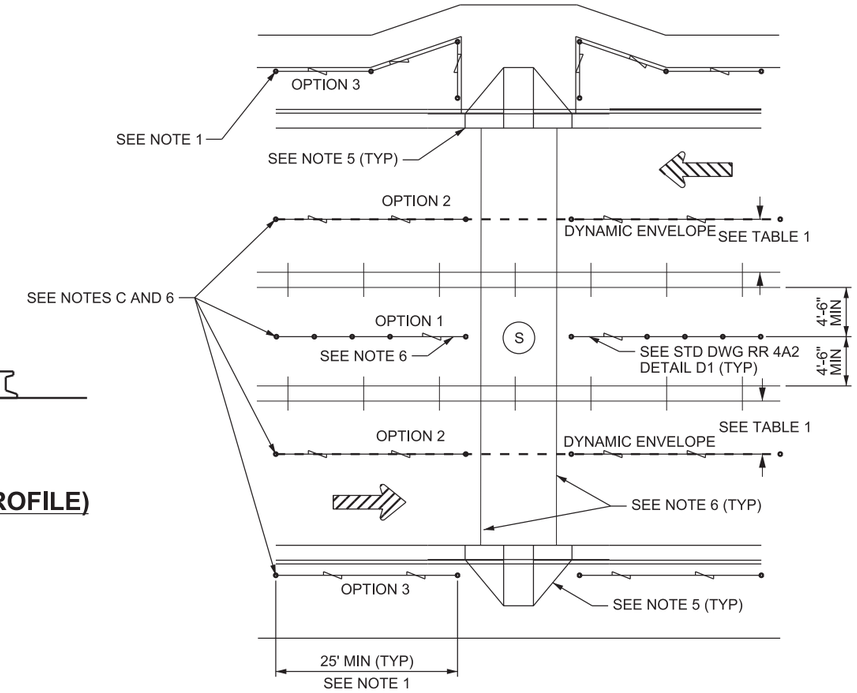


## MID-BLOCK CROSSINGS STREET RUNNING ALIGNMENTS DETAIL C

SEE NOTE 1

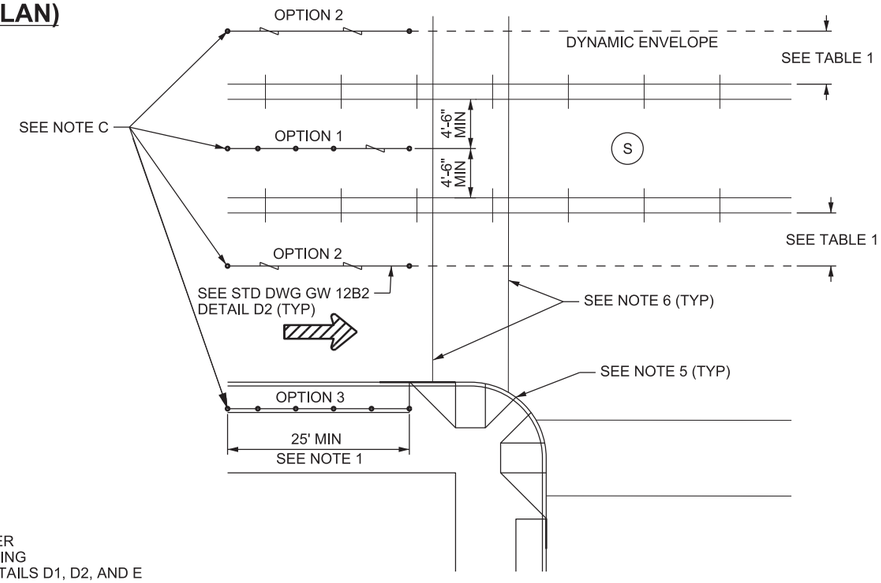


## INTERSECTIONS STREET RUNNING ALIGNMENTS DETAIL D

| TABLE 1 | |
|---|---|
| DYNAMIC ENVELOPE WIDTH | |
| VEHICLE TYPE | WIDTH* |
| LIGHT RAIL/TROLLEY ONLY | 4'-6" |
| SHARED USE | 6'-0" |
| HEAVY RAIL | 6'-0" |

* MEASURED FROM EDGE OF NEAREST RAIL

**LEGEND:**

CHANNELIZING FENCE/BARRIER
OR CHANNELIZING LANDSCAPING
SEE STD DWG GW RR 4A2 DETAILS D1, D2, AND E

CHANNELIZING FENCE/BARRIER
SEE STD DWG GW RR 4A2 DETAILS D1 AND D2

(S) SIGNALIZED INTERSECTION

**DESIGN-ONLY NOTES:**

A. DEFINITIONS:
1. STREET RUNNING ALIGNMENT - A RAILROAD ALIGNMENT IN WHICH TRAINS OPERATE IN MIXED TRAFFIC WITH ALL TYPES OF ROAD USERS. THE ALIGNMENT IS TYPICALLY SEPARATED FROM TRAFFIC BY A CURB OR STRIPING.
2. SEMI-EXCLUSIVE ALIGNMENT - A RAILROAD ALIGNMENT THAT IS IN A SEPARATE RIGHT-OF-WAY OR ALONG A ROADWAY WHERE MOTOR VEHICLES, PEDESTRIANS, AND BICYCLES HAVE LIMITED ACCESS AND CROSS AT DESIGNATED LOCATIONS ONLY. THE ALIGNMENT IS TYPICALLY SEPARATED BY FENCING OR BARRIERS BETWEEN CROSSINGS.
3. DYNAMIC ENVELOPE - THE CLEARANCE REQUIRED FOR THE TRAIN OR LIGHT RAIL TRANSIT EQUIPMENT OVERHANG.
4. SIDEWALK - THAT PORTION OF A STREET BETWEEN THE CURB LINE OR THE LATERAL LINE OF A ROADWAY AND THE ADJACENT PROPERTY LINE THAT IS PAVED OR IMPROVED AND INTENDED FOR USE BY PEDESTRIANS.
5. PATHWAY - A PUBLIC WAY OUTSIDE OF THE TRAVELED WAY AND PHYSICALLY SEPARATED FROM THE ROADWAY BY OPEN SPACE OR BARRIER. PATHWAYS DO NOT INCLUDE SIDEWALKS.
6. PEDESTRIAN ACCESS ROUTE - EITHER A SIDEWALK OR A PATHWAY.

B. PLACE A W10-7 BLANK-OUT SIGN IN THE ALTERNATE LOCATION ONLY IF THE 4 FT MINIMUM CLEARANCE CAN BE PROVIDED TO EITHER SIDE OF THE SIGN.

C. PLACE CHANNELIZING FENCE OR BARRIER 18 INCHES FROM THE FACE OF CURB OR ADJACENT TO THE SIDEWALK WHICHEVER PROVIDES GREATER CLEARANCE FOR ROAD USERS WHEN CHANNELIZING FENCE OR BARRIER RUNS PARALLEL TO THE ROADWAY.

D. PROVIDE DENSE LANDSCAPING WHEN USED IN PLACE OF CHANNELIZING FENCING OR BARRIER TO RESTRICT PEDESTRIANS FROM USING LOCATIONS OTHER THAN PEDESTRIAN ACCESSES.

**NOTES:**

1. PLACE CHANNELIZING FENCE OR BARRIER 18 INCHES FROM THE FACE OF CURB OR ADJACENT TO THE SIDEWALK WHICHEVER PROVIDES GREATER CLEARANCE FOR ROAD USERS WHEN CHANNELIZING FENCE OR BARRIER RUNS PARALLEL TO THE ROADWAY.
2. DO NOT OBSTRUCT SIGHT DISTANCE WITH FENCING OR BARRIERS. USE A CHANNELIZING FENCE OR BARRIER WITH A MINIMUM HEIGHT OF 42 INCHES AND A MAXIMUM HEIGHT OF 43 INCHES WHEN NEAR GRADE CROSSINGS.
3. ADJUST CHANNELIZATION AND BARRIER LAYOUT FROM THE LAYOUT SHOWN ON THIS DRAWING AS NECESSARY BASED ON SITE SPECIFIC SITUATIONS WHILE MAINTAINING COMPLIANCE WITH THE MINIMUMS SHOWN.
4. PLACE THE DETECTABLE WARNING SURFACE ACCORDING TO STD DWG RR 4A1, DETAILS A AND B, FOR LOCATIONS OTHER THAN AUTOMATIC VEHICLE GATES OR ROADWAY AND PEDESTRIAN FLASHING-LIGHT SIGNALS.
5. REFER TO PA SERIES STD DWGS FOR PEDESTRIAN RAMP DETAILS.
6. REFER TO ST SERIES STD DWGS FOR CROSSWALK MARKING DETAILS.

SUPPLEMENTAL DRAWING

REVISIONS

| NO. | DATE | APPR. | REMARKS |
|---|---|---|---|
| 1 | 8/29/19 | MRB | UPDATED REFERENCES FOR THE ST STD DWGS |

**UTAH DEPARTMENT OF TRANSPORTATION**
STANDARD DRAWINGS FOR ROAD AND BRIDGE CONSTRUCTION
SALT LAKE CITY, UTAH

RECOMMENDED FOR APPROVAL — AUG.29.2019 DATE
CHAIRMAN STANDARDS COMMITTEE APPROVED — AUG.29.2019 DATE
DEPUTY DIRECTOR

PEDESTRIAN CONTROLS
STREET RUNNING
RAILROAD ALIGNMENT
SIGNALIZED
INTERSECTIONS

STANDARD DRAWING TITLE

STD. DWG. NO.
RR 6

DGN File:L:\Standard_Drawings\Imperial\2017 Approved_Supplemental_Issues\Suppl0 Approved August - 2019\Backup1\RR06.dgn
04-SEP-2019

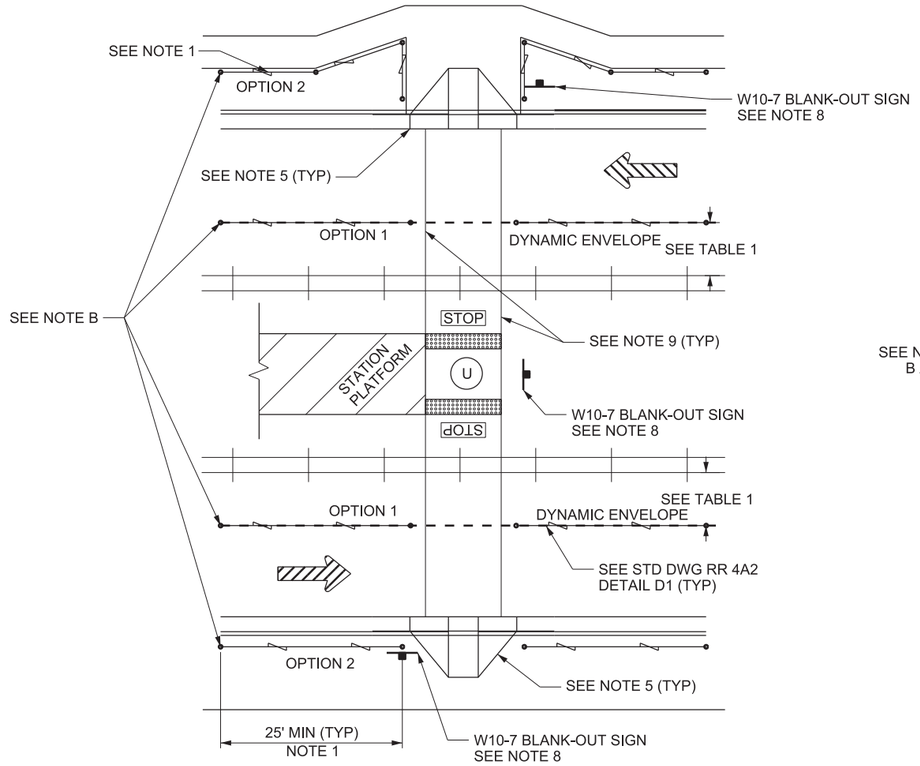


## MID-BLOCK STATION ACCESS STREET RUNNING ALIGNMENTS DETAIL A

SEE NOTE 1

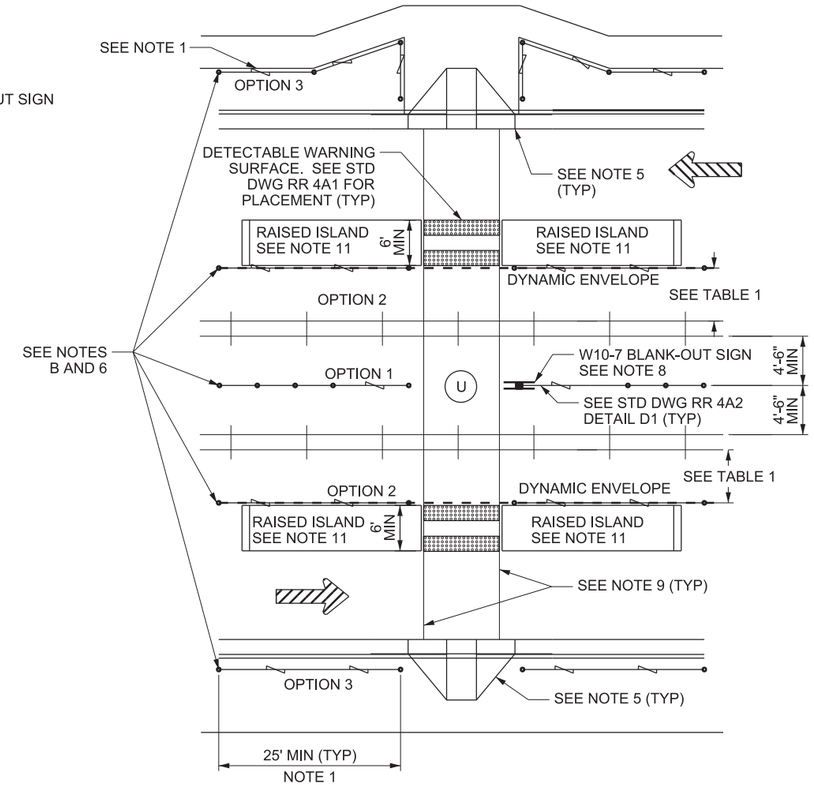


## MID-BLOCK CROSSINGS STREET RUNNING ALIGNMENTS DETAIL B

SEE NOTE 1

| TABLE 1 | |
|---|---|
| DYNAMIC ENVELOPE WIDTH | |
| VEHICLE TYPE | WIDTH* |
| LIGHT RAIL/TROLLEY ONLY | 4'-6" |
| SHARED USE | 6'-0" |
| HEAVY RAIL | 6'-0" |

* MEASURED FROM EDGE OF NEAREST RAIL

**LEGEND:**

CHANNELIZING FENCE/BARRIER
OR CHANNELIZING LANDSCAPING
SEE STD DWG RR 4A2 DETAILS D1, D2, AND E

CHANNELIZING FENCE/BARRIER
SEE STD DWG RR 4A2 DETAILS D1 AND D2

(U) UNSIGNALIZED INTERSECTION

**DESIGN-ONLY NOTES:**

A. DEFINITIONS:
1. STREET RUNNING ALIGNMENT - A RAILROAD ALIGNMENT IN WHICH TRAINS OPERATE IN MIXED TRAFFIC WITH ALL TYPES OF ROAD USERS. THE ALIGNMENT IS TYPICALLY SEPARATED FROM TRAFFIC BY A CURB OR STRIPING.
2. SEMI-EXCLUSIVE ALIGNMENT - A RAILROAD ALIGNMENT THAT IS IN A SEPARATE RIGHT-OF-WAY OR ALONG A ROADWAY WHERE MOTOR VEHICLES, PEDESTRIANS, AND BICYCLES HAVE LIMITED ACCESS AND CROSS AT DESIGNATED LOCATIONS ONLY. THE ALIGNMENT IS TYPICALLY SEPARATED BY FENCING OR BARRIERS BETWEEN CROSSINGS.
3. DYNAMIC ENVELOPE - THE CLEARANCE REQUIRED FOR THE TRAIN OR LIGHT RAIL TRANSIT EQUIPMENT OVERHANG.
4. SIDEWALK - THAT PORTION OF A STREET BETWEEN THE CURB LINE OR THE LATERAL LINE OF A ROADWAY AND THE ADJACENT PROPERTY LINE THAT IS PAVED OR IMPROVED AND INTENDED FOR USE BY PEDESTRIANS.
5. PATHWAY - A PUBLIC WAY OUTSIDE OF THE TRAVELED WAY AND PHYSICALLY SEPARATED FROM THE ROADWAY BY OPEN SPACE OR BARRIER. PATHWAYS DO NOT INCLUDE SIDEWALKS.
6. PEDESTRIAN ACCESS ROUTE - EITHER A SIDEWALK OR A PATHWAY.

B. PLACE CHANNELIZING FENCE OR BARRIER WHEN USED ACCORDING TO OPTION 1 UNLESS SITE SPECIFIC CONDITIONS SUCH AS RIGHT-OF-WAY AVAILABILITY, CHANNELIZATION TYPE, OR SIGHT DISTANCE REQUIRE ALTERNATE PLACEMENT. CONSTRUCT FENCING A MINIMUM OF 25 FT PARALLEL TO THE TRACKS.

C. PROVIDE DENSE LANDSCAPING WHEN USED IN PLACE OF CHANNELIZING FENCING OR BARRIER TO RESTRICT PEDESTRIANS FROM USING LOCATIONS OTHER THAN PEDESTRIAN ACCESSES.

**NOTES:**

1. PLACE CHANNELIZING FENCE OR BARRIER 18 INCHES FROM THE FACE OF CURB OR ADJACENT TO THE SIDEWALK WHICHEVER PROVIDES GREATER CLEARANCE FOR ROAD USERS WHEN CHANNELIZING FENCE OR BARRIER RUNS PARALLEL TO THE ROADWAY.
2. DO NOT OBSTRUCT SIGHT DISTANCE WITH FENCING OR BARRIERS. USE A CHANNELIZING FENCE OR BARRIER WITH A MINIMUM HEIGHT OF 42 INCHES AND A MAXIMUM HEIGHT OF 43 INCHES WHEN NEAR GRADE CROSSINGS.
3. ADJUST CHANNELIZATION AND BARRIER LAYOUT FROM THE LAYOUT SHOWN ON THIS DRAWING AS NECESSARY BASED ON SITE SPECIFIC SITUATIONS WHILE MAINTAINING COMPLIANCE WITH THE MINIMUMS SHOWN.
4. PLACE THE DETECTABLE WARNING SURFACE ACCORDING TO STD DWG RR 4A1, DETAILS A AND B, FOR LOCATIONS OTHER THAN AUTOMATIC VEHICLE GATES OR ROADWAY OR PEDESTRIAN FLASHING-LIGHT SIGNALS.
5. SEE PA SERIES STD DWGS FOR PEDESTRIAN RAMP DETAILS.
6. INSTALL CHANNELIZING FENCE OR BARRIER WITH A LOOK (R15-8) SIGN ACCORDING TO STD DWG RR 4A2 DETAIL D1 UNLESS SIGHT DISTANCE RESTRICTIONS NECESSITATE W10-7 BLANK-OUT SIGNS. REPLACE R15-8 LOOK SIGNS WITH W10-7 BLANK-OUT SIGNS, IF REQUIRED.
7. INSTALL CHANNELIZING FENCE OR BARRIER WITH A LOOK (R15-8) SIGN ACCORDING TO STD DWG RR 4A2 DETAIL D2 UNLESS SIGHT DISTANCE RESTRICTIONS NECESSITATE W10-7 BLANK-OUT SIGNS. INSTALL CHANNELIZING FENCE OR BARRIER ACCORDING TO DETAIL A ON THIS SHEET IF BLANK-OUT SIGNS ARE REQUIRED.
8. INSTALL W10-7 BLANK-OUT SIGN ACCORDING TO STD DWG RR 3A1, DETAIL B.
9. SEE ST SERIES STD DWGS FOR CROSSWALK MARKING DETAILS.
10. SEE STD DWG PA 2, MEDIAN BREAK EXAMPLE, FOR PEDESTRIAN REFUGE DETAILS.
11. SEE STD DWG GW 1B FOR RAISED ISLAND AND PLOWABLE END SECTION DETAILS.

SUPPLEMENTAL DRAWING

REVISIONS

| NO. | DATE | APPR. | REMARKS |
|---|---|---|---|
| 1 | 8/29/19 | MRB | UPDATED REFERENCES FOR THE ST STD DWGS |

**UTAH DEPARTMENT OF TRANSPORTATION**
STANDARD DRAWINGS FOR ROAD AND BRIDGE CONSTRUCTION
SALT LAKE CITY, UTAH

RECOMMENDED FOR APPROVAL — AUG. 29, 2019 DATE
CHAIRMAN-STANDARDS COMMITTEE APPROVED — AUG. 29, 2019 DATE
DEPUTY DIRECTOR

PEDESTRIAN CONTROLS
STREET RUNNING
RAILROAD ALIGNMENT
UNSIGNALIZED
INTERSECTIONS
STANDARD DRAWING TITLE

STD. DWG. NO.
RR 7

04-SEP-2019 DGN File:L:\Standard_Drawings\Imperial\2017 Approved_Supplemental_Issues\Supp10 Approved August - 2019\Backup\RR07.dgn

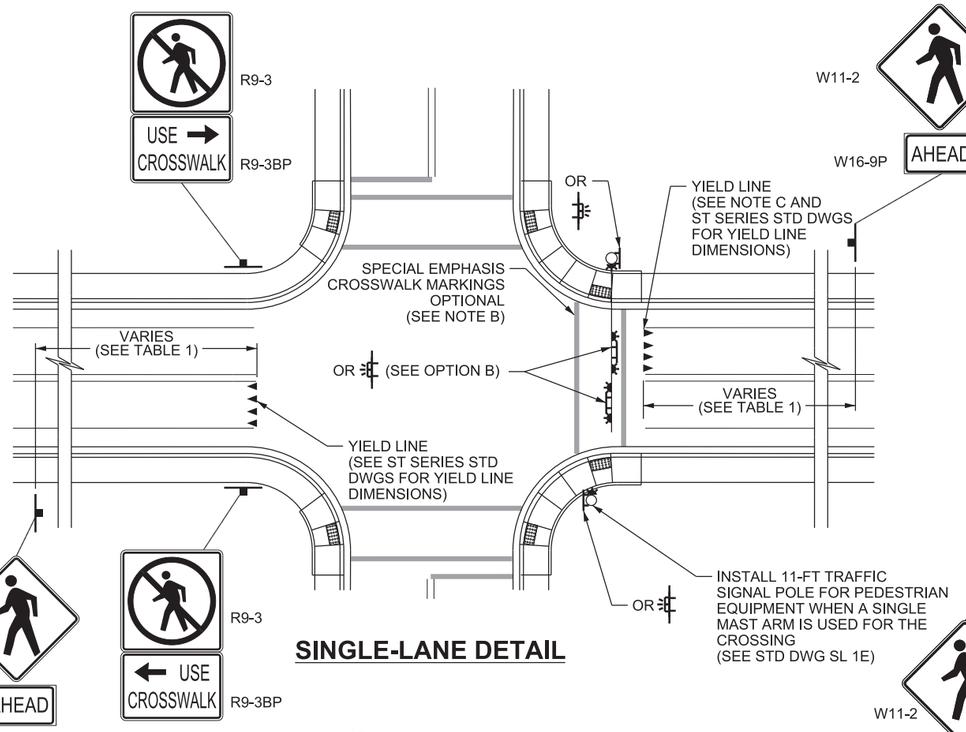


## SINGLE-LANE DETAIL

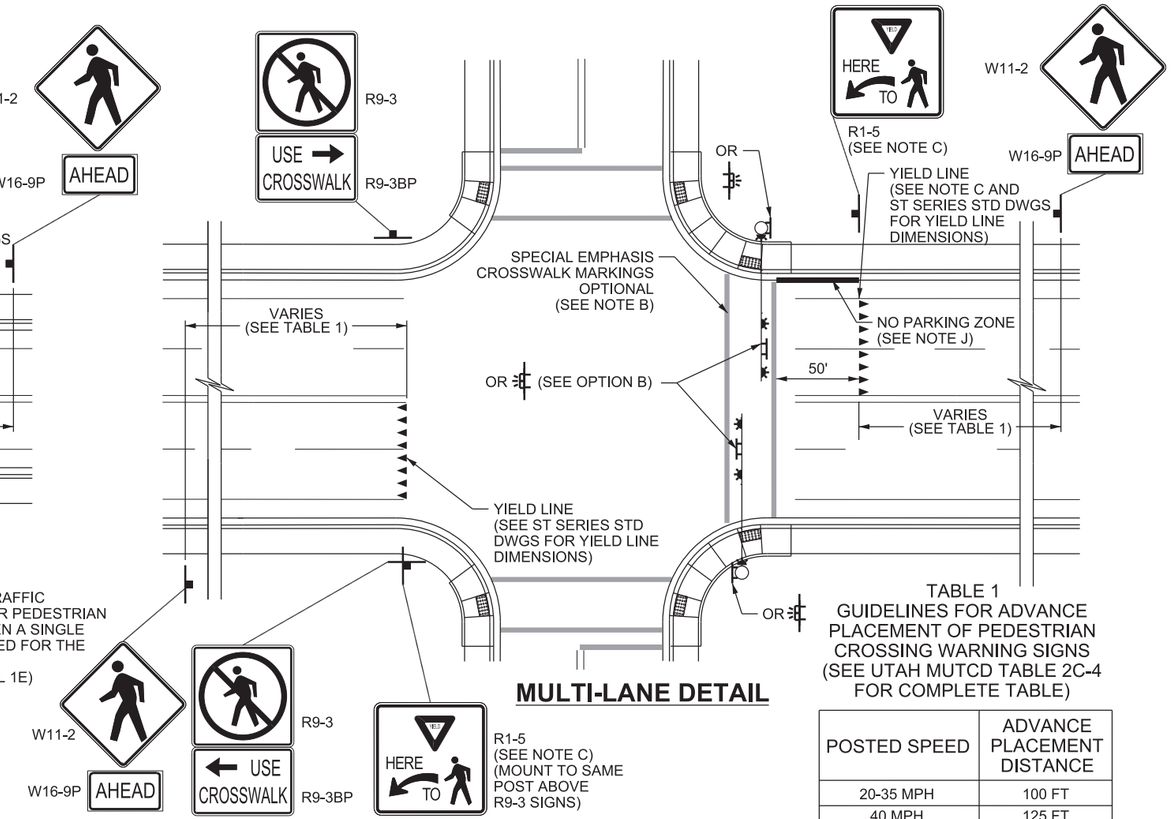


## MULTI-LANE DETAIL

TABLE 1
GUIDELINES FOR ADVANCE PLACEMENT OF PEDESTRIAN CROSSING WARNING SIGNS (SEE UTAH MUTCD TABLE 2C-4 FOR COMPLETE TABLE)

| POSTED SPEED | ADVANCE PLACEMENT DISTANCE |
|---|---|
| 20-35 MPH | 100 FT |
| 40 MPH | 125 FT |
| 45 MPH | 175 FT |

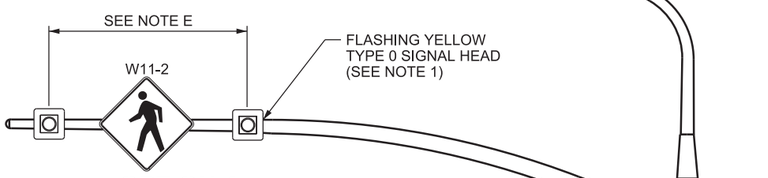


## OPTION A
## FLASHING BEACON DETAIL

## OPTION B
## RRFB DETAIL

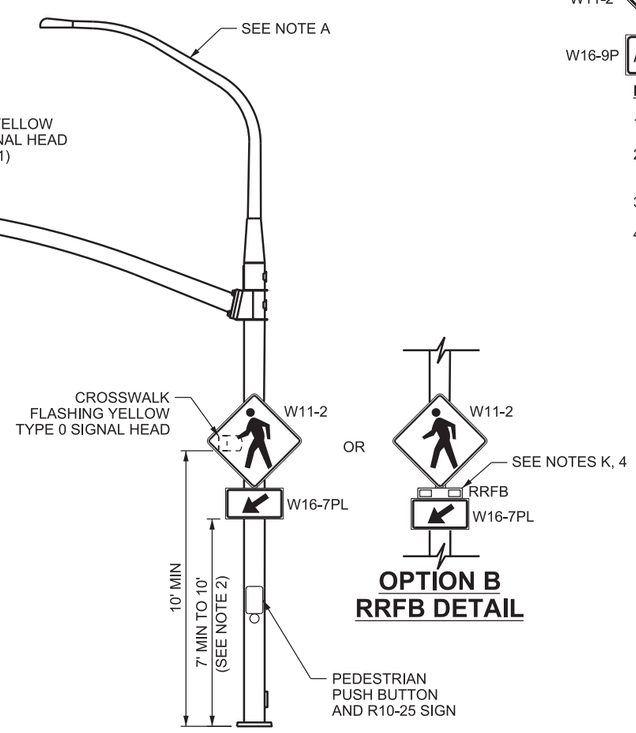


## OPTION A
## FLASHING BEACON DETAIL




## OPTION B
## RRFB DETAIL

**LEGEND**

- YELLOW TYPE 0 SIGNAL HEAD
- MAST ARM SIGNAL POLE
- MAST ARM OR SIGNAL POLE MOUNTED SIGN
- DETECTABLE WARNING SURFACE
- GROUND MOUNT SIGN
- OPTION A
- OPTION B

**NOTES:**

1. DO NOT PLACE RETROREFLECTIVE TAPE ON TYPE 0 SIGNAL HEAD BACKPLATES.
2. INCREASE MOUNTING HEIGHT OF POLE-MOUNTED W11-2 SIGN AND W16-7PL PLAQUE IF BLOCKED BY OTHER SIGNS OR OBSTRUCTIONS. USE A 10 FT MOUNTING HEIGHT TO BOTTOM OF W16-7PL PLAQUE IN MULTI-LANE SITUATIONS TO PREVENT VISUAL BLOCKING BY R1-5 SIGN.
3. INSTALL RRFB TO MAST ARM USING THE CLAMP ASSEMBLY AS SHOWN ON SL 3D. EXTEND TUBE BELOW W11-2 SIGN TO INSTALL RRFB.
4. INSTALL RRFB WITH INTEGRATED PEDESTRIAN CONFIRMATION PILOT LIGHT.

**DESIGN-ONLY NOTES:**

A. INSTALL STREET LIGHTING UNLESS DIRECTED OTHERWISE BY REGION TRAFFIC OPERATIONS ENGINEER.

B. USE SPECIAL EMPHASIS CROSSWALK MARKINGS WHEN REQUIRED BY REGION TRAFFIC OPERATIONS ENGINEER. SEE ST SERIES STD DWGS.

C. PLACE YIELD LINE 4 FT FROM CROSSWALK AT INTERSECTIONS ON SINGLE-LANE APPROACHES OR 50 FT FOR MULTI-LANE APPROACHES. USE "YIELD HERE TO PEDESTRIANS" R1-5 SIGN FOR MULTI-LANE APPROACHES.

D. REFER TO UTAH MUTCD PART 7 FOR REQUIREMENTS AT SCHOOL CROSSINGS.

E. PROVIDE A TYPE 0 SIGNAL HEAD CENTERED OVER EACH THRU LANE, FOR MULTIPLE THRU LANE APPROACHES. PROVIDE W11-2 SIGNS CENTERED BETWEEN ALL TYPE 0 SIGNAL HEADS.

CENTER W11-2 SIGN IN THE THRU LANE AND PROVIDE TWO TYPE 0 SIGNAL HEADS SPACED AT LEAST 8 FT APART, FOR SINGLE THRU LANE APPROACHES.

F. DO NOT INSTALL FLASHING BEACON CROSSWALK ON ROADWAYS WITH POSTED SPEEDS GREATER THAN 45 MPH UNLESS DIRECTED BY REGION TRAFFIC OPERATIONS ENGINEER.

G. PLACE FLASHING BEACON ASSEMBLIES ON A SINGLE OR TWO SEPARATE MAST ARMS.

H. DO NOT INSTALL FLASHING BEACON CROSSWALK IN A REDUCED SPEED SCHOOL ZONE.

I. A MULTI-LANE APPROACH HAS TWO OR MORE LANES MOVING TOWARD THE INTERSECTION, INCLUDING TURNING LANES.

J. PLACE "NO PARKING" SIGNS TO PROHIBIT PARKING 50 FT BEFORE CROSSWALK. NO ACCESSES ARE ALLOWED IN THIS AREA.

K. MEET FHWA INTERIM APPROVAL (IA-21) REQUIREMENTS FOR RECTANGULAR RAPID FLASHING BEACON (RRFB).

L. RRFB CAN ONLY BE USED ON NON-CONTROLLED APPROACHES.

M. DO NOT MIX FLASHING BEACON TYPES (OPTION A AND OPTION B) AT A CROSSWALK.

N. LOCATE RRFB AND SIGN ON MAST ARM CENTERED OVER THE TRAVEL LANES.

SUPPLEMENTAL DRAWING

REVISIONS

| NO. | DATE | APPR. | REMARKS |
|---|---|---|---|
| 1 | 8/29/2019 | JS | ADDED RRFB OPTION FOR OVERHEAD, ADDED RRFB NOTES. |

**UTAH DEPARTMENT OF TRANSPORTATION**
STANDARD DRAWINGS FOR ROAD AND BRIDGE CONSTRUCTION
SALT LAKE CITY, UTAH

RECOMMENDED FOR APPROVAL — AUG 29, 2019 DATE
CHAIRMAN STANDARDS COMMITTEE APPROVED — AUG 29, 2019 DATE
DEPUTY DIRECTOR

OVERHEAD FLASHING BEACON AT AN INTERSECTION CROSSWALK
STANDARD DRAWING TITLE

STD. DWG. NO.
SL 6D

04-SEP-2019 DGN File:L:\Standard.Drawings\Imperial\2017 Approved_Supplemental_Issues\Suppl0 Approved August - 2019\Backup\SL06D.dgn

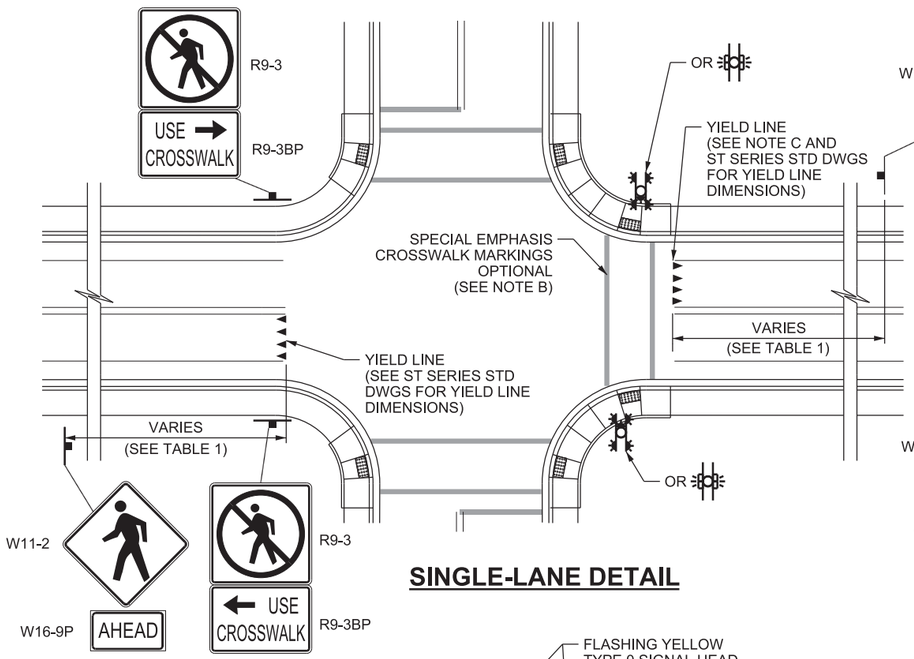


## SINGLE-LANE DETAIL

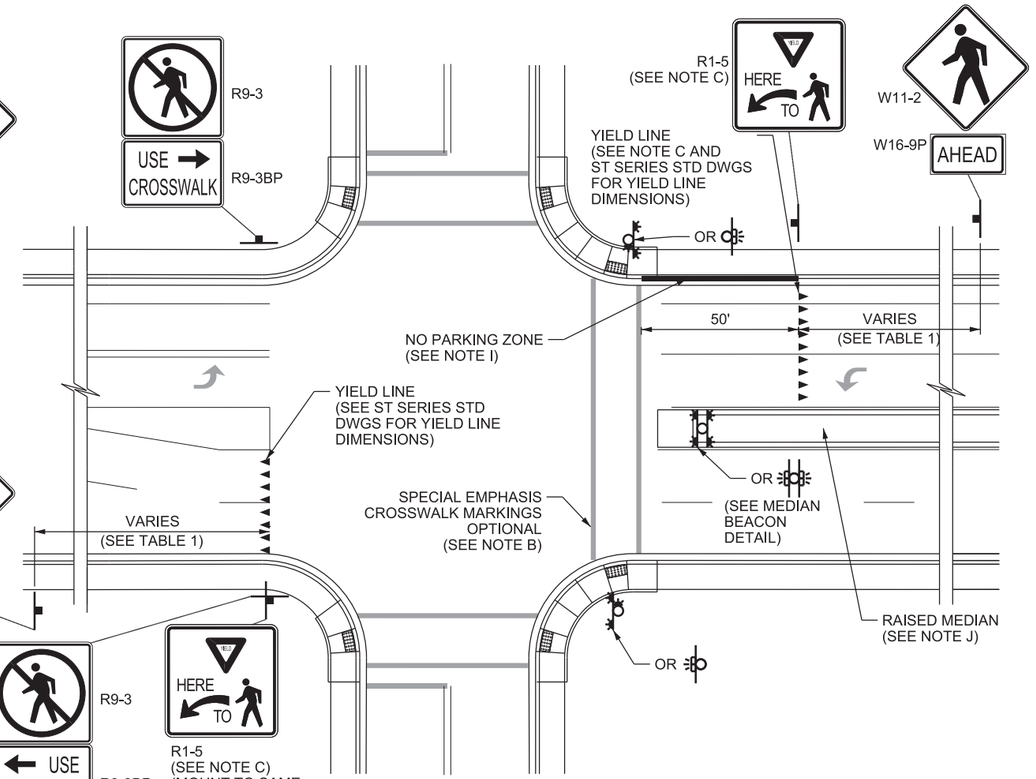


## MULTI-LANE DETAIL

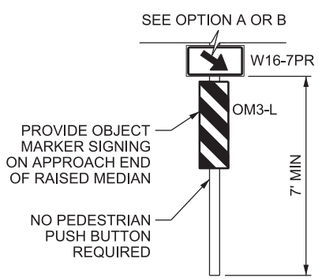


## MEDIAN BEACON DETAIL

15 FT TRAFFIC SIGNAL POLE / LUMINAIRE POLE (SEE NOTES A, J, K, AND STD DWG SL 1E)

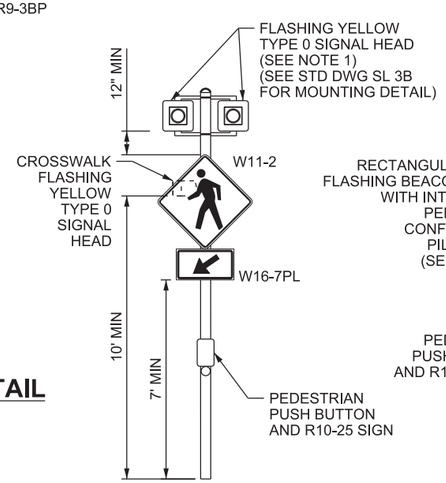


## OPTION A FLASHING BEACON DETAIL

15 FT TRAFFIC SIGNAL POLE / LUMINAIRE POLE (SEE NOTES A, H AND STD DWG SL 1E)

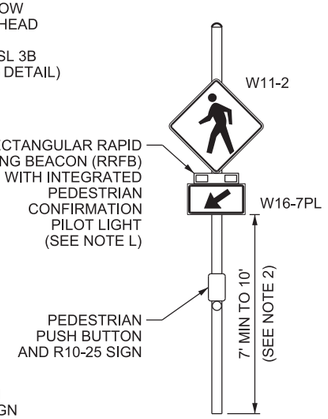


## OPTION B RRFB DETAIL

15 FT TRAFFIC SIGNAL POLE / LUMINAIRE POLE (SEE NOTES A, H, AND STD DWG SL 1E)

**LEGEND**

- YELLOW TYPE 0 SIGNAL HEAD
- DETECTABLE WARNING SURFACE
- GROUND MOUNT SIGN
- OPTION A
- OPTION A: BACK-TO-BACK (SEE NOTE K)
- OPTION B
- OPTION B: BACK-TO-BACK (SEE NOTE K)

TABLE 1
GUIDELINES FOR ADVANCE PLACEMENT OF PEDESTRIAN CROSSING WARNING SIGNS
(SEE UTAH MUTCD TABLE 2C-4 FOR COMPLETE TABLE)

| POSTED SPEED | ADVANCE PLACEMENT DISTANCE |
|---|---|
| 20-35 MPH | 100 FT |
| 40 MPH (SEE NOTE E) | 125 FT |

**NOTES:**

1. DO NOT PLACE RETROREFLECTIVE TAPE ON TYPE 0 SIGNAL HEAD BACKPLATES.
2. INCREASE MOUNTING HEIGHT OF W11-2 SIGN AND W16-7PL PLAQUE IF BLOCKED BY OTHER SIGNS OR OBSTRUCTIONS. USE A 10-FT TO BOTTOM OF SIGN MOUNTING HEIGHT FOR OPTION B ON OUTSIDE SHOULDER IN MULTI-LANE SITUATIONS TO PREVENT VISUAL BLOCKING FROM R1-5 SIGN.

**DESIGN-ONLY NOTES:**

A. INSTALL STREET LIGHTING UNLESS DIRECTED OTHERWISE BY REGION TRAFFIC OPERATIONS ENGINEER.

B. USE SPECIAL EMPHASIS CROSSWALK MARKINGS WHEN REQUIRED BY REGION TRAFFIC OPERATIONS ENGINEER. SEE ST SERIES STD DWGS.

C. PLACE YIELD LINE 4 FT FROM CROSSWALK AT INTERSECTIONS ON SINGLE-LANE APPROACHES OR 50 FT FOR MULTI-LANE APPROACHES. USE "YIELD HERE TO PEDESTRIANS" R1-5 SIGN FOR MULTI-LANE APPROACHES.

D. REFER TO UTAH MUTCD PART 7 FOR REQUIREMENTS AT SCHOOL CROSSINGS.

E. DO NOT USE POST-MOUNTED FLASHING BEACON CROSSWALK WHEN POSTED SPEED EXCEEDS 35 MPH UNLESS OTHERWISE DIRECTED BY REGION TRAFFIC OPERATIONS ENGINEER.

F. DO NOT INSTALL FLASHING BEACON CROSSWALK WITHIN A REDUCED SPEED SCHOOL ZONE.

G. A MULTI-LANE APPROACH HAS TWO OR MORE LANES MOVING TOWARD THE INTERSECTION, INCLUDING TURNING LANES.

H. DO NOT INSTALL POST-MOUNTED FLASHING BEACONS WHERE THERE ARE FOUR OR MORE LANES, INCLUDING TURNING LANES, IN ONE DIRECTION.

I. PLACE "NO PARKING" SIGNS TO PROHIBIT PARKING 50 FT BEFORE CROSSWALK. NO ACCESSES ARE ALLOWED IN THIS AREA.

J. RAISED MEDIAN CONFIGURATION DETERMINED BY LOCATION NEEDS. SEE GW SERIES STD DWGS. MEET LATERAL OFFSET REQUIREMENTS.

K. BACK-TO-BACK CONSISTS OF W11-2 AND W16-7PL SIGNS AND FLASHING BEACONS FACING OPPOSITE DIRECTIONS MOUNTED ON THE SAME POLE.

L. MEET FHWA INTERIM APPROVAL (IA-21) REQUIREMENTS FOR RECTANGULAR RAPID FLASHING BEACON.

M. RECTANGULAR RAPID FLASHING BEACON CAN ONLY BE USED ON NON-CONTROLLED APPROACHES.

N. DO NOT MIX POST-MOUNTED BEACON TYPES AT A CROSSWALK.

SUPPLEMENTAL DRAWING

REVISIONS

| NO. | DATE | APPR. | REMARKS |
|---|---|---|---|
| 1 | 2/22/18 | JS | UPDATED NOTES, CALLOUTS AND GRAPHICS. DELETED RRFB FROM STD DWGS. |
| 2 | 8/30/18 | JS | ADDED RRFB OPTION. CHANGED SINGLE LANE DETAIL TO HAVE OPTION A BACK-TO-BACK. |
| 3 | 8/29/19 | MRB | UPDATED REFERENCES FOR THE ST SERIES STANDARD DRAWINGS |

**UTAH DEPARTMENT OF TRANSPORTATION**
STANDARD DRAWINGS FOR ROAD AND BRIDGE CONSTRUCTION
SALT LAKE CITY, UTAH

RECOMMENDED FOR APPROVAL — AUG. 29, 2019 DATE
CHAIRMAN STANDARDS COMMITTEE APPROVED — AUG. 29, 2019 DATE
DEPUTY DIRECTOR

STANDARD DRAWING TITLE
POST-MOUNTED FLASHING BEACON AT AN INTERSECTION CROSSWALK

STD. DWG. NO.
SL 6E

04-SEP-2019 DGN File:L:\Standard_Drawings\Imperial\2017 Approved_Supplemental_Issues\Supl0 Approved August - 2019\Backup\SL06E.DGN

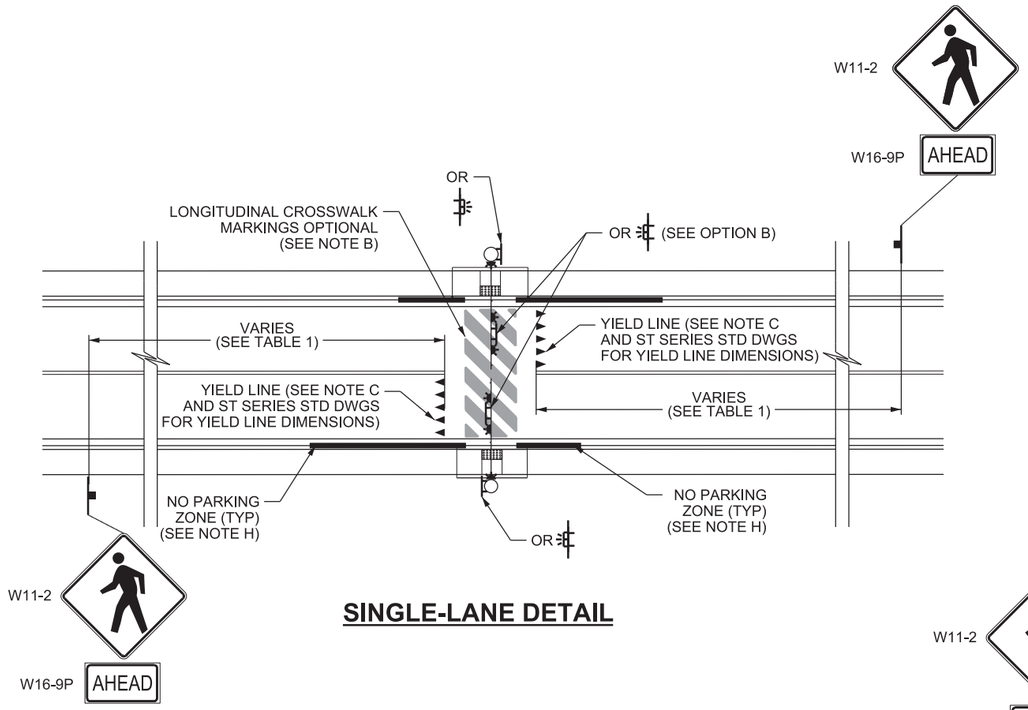


## SINGLE-LANE DETAIL

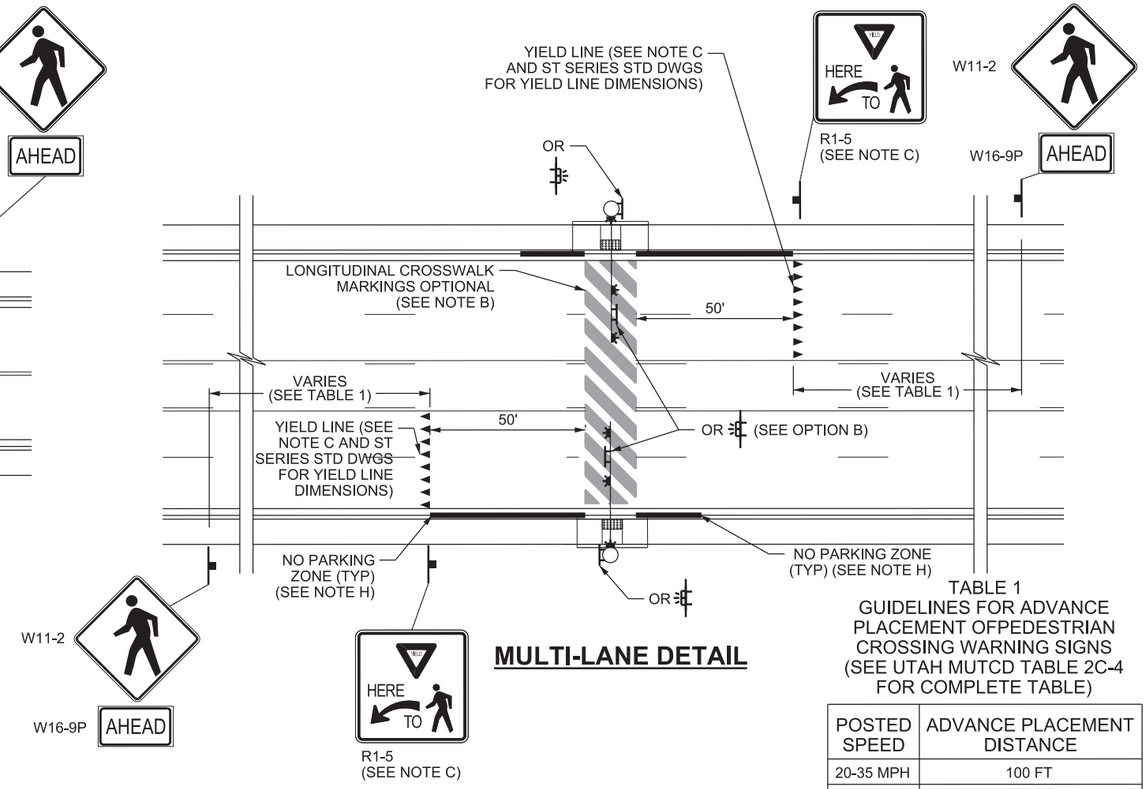


## MULTI-LANE DETAIL

TABLE 1
GUIDELINES FOR ADVANCE PLACEMENT OFPEDESTRIAN CROSSING WARNING SIGNS (SEE UTAH MUTCD TABLE 2C-4 FOR COMPLETE TABLE)

| POSTED SPEED | ADVANCE PLACEMENT DISTANCE |
|---|---|
| 20-35 MPH | 100 FT |
| 40 MPH | 125 FT |
| 45 MPH | 175 FT |

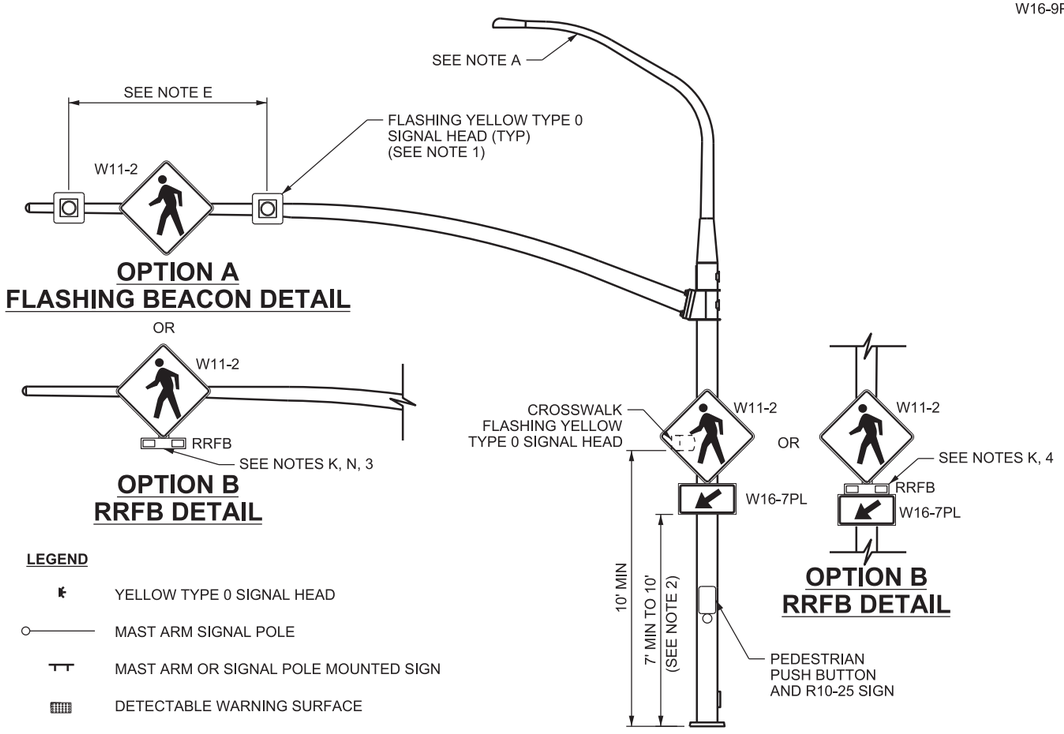


**LEGEND**

- YELLOW TYPE 0 SIGNAL HEAD
- MAST ARM SIGNAL POLE
- MAST ARM OR SIGNAL POLE MOUNTED SIGN
- DETECTABLE WARNING SURFACE
- GROUND MOUNT SIGN
- OPTION A
- OPTION B

**NOTES:**

1. DO NOT PLACE RETROREFLECTIVE TAPE ON TYPE 0 SIGNAL HEAD BACKPLATES.
2. INCREASE MOUNTING HEIGHT OF POLE-MOUNTED W11-2 SIGN AND W16-7PL PLAQUE IF BLOCKED BY OTHER SIGNS OR OBSTRUCTIONS. USE A 10 FT MOUNTING HEIGHT TO BOTTOM OF W16-7PL PLAQUE IN MULTI-LANE SITUATIONS TO PREVENT VISUAL BLOCKING BY R1-5 SIGN.
3. INSTALL RRFB TO MAST ARM USING THE CLAMP ASSEMBLY AS SHOWN ON SL 3D. EXTEND TUBE BELOW W11-2 SIGN TO INSTALL RRFB.
4. INSTALL RRFB WITH INTEGRATED PEDESTRIAN CONFIRMATION PILOT LIGHT.

**DESIGN-ONLY NOTES:**

A. INSTALL STREET LIGHTING UNLESS DIRECTED OTHERWISE BY REGION TRAFFIC OPERATIONS ENGINEER.

B. USE LONGITUDINAL CROSSWALK MARKINGS WHEN REQUIRED BY REGION TRAFFIC OPERATIONS ENGINEER.

C. PLACE YIELD LINE 4 FT FROM CROSSWALK ON SINGLE-LANE APPROACHES OR 50 FT FOR MULTI-LANE APPROACHES. USE "YIELD HERE TO PEDESTRIANS" R1-5 SIGN FOR MULTI-LANE APPROACHES.

D. REFER TO UTAH MUTCD PART 7 FOR REQUIREMENTS AT SCHOOL CROSSINGS.

E. PROVIDE A TYPE 0 SIGNAL HEAD CENTERED OVER EACH THRU LANE, FOR MULTIPLE THRU LANE APPROACHES. PROVIDE W11-2 SIGNS CENTERED BETWEEN ALL TYPE 0 SIGNAL HEADS.

CENTER W11-2 SIGN IN THE THRU LANE AND PROVIDE TWO TYPE 0 SIGNAL HEADS SPACED AT LEAST 8 FT APART, FOR SINGLE THRU LANE APPROACHES.

F. DO NOT INSTALL FLASHING BEACON CROSSWALK ON ROADWAYS WITH POSTED SPEEDS GREATER THAN 45 MPH UNLESS DIRECTED BY REGION TRAFFIC OPERATIONS ENGINEER.

G. PLACE FLASHING BEACON ASSEMBLIES ON A SINGLE OR TWO SEPARATE MAST ARMS.

H. PLACE "NO PARKING SIGNS" TO PROHIBIT PARKING 50 FT BEFORE CROSSWALK AND 20 FT AFTER CROSSWALK FOR EACH APPROACH. NO ACCESSES ARE ALLOWED IN THIS AREA.

I. DO NOT INSTALL FLASHING BEACON CROSSWALK WITHIN A REDUCED SPEED SCHOOL ZONE.

J. A MULTI-LANE APPROACH HAS TWO OR MORE LANES MOVING TOWARD THE INTERSECTION, INCLUDING TURNING LANES.

K. MEET FHWA INTERIM APPROVAL (IA-21) REQUIREMENTS FOR RECANGULAR RAPID FLASHING BEACON (RRFB).

L. RRFB CAN ONLY BE USED ON NON-CONTROLLED APPROACHES.

M. DO NOT MIX FLASHING BEACON TYPES (OPTION A AND OPTION B) AT A CROSSWALK.

N. LOCATE RRFB AND SIGN ON MAST ARM CENTERED OVER THE TRAVEL LANES.

SUPPLEMENTAL DRAWING

REVISIONS

| NO. | DATE | APPR. | REMARKS |
|---|---|---|---|
| 1 | 8/29/2019 | JS | ADDED RRFB OPTION FOR OVERHEAD. ADDED RRFB NOTES. |

**UTAH DEPARTMENT OF TRANSPORTATION**
STANDARD DRAWINGS FOR ROAD AND BRIDGE CONSTRUCTION
SALT LAKE CITY, UTAH

RECOMMENDED FOR APPROVAL — AUG 29, 2019 DATE
CHAIRMAN STANDARDS COMMITTEE APPROVED — AUG 29, 2019 DATE
DEPUTY DIRECTOR

OVERHEAD FLASHING BEACON AT A MIDBLOCK CROSSWALK
STANDARD DRAWING TITLE

STD. DWG. NO.
SL 6F

DGN File:L:\Standard_Drawings\Imperial\2017 Approved_Supplemental_Issues\Suppl0 Approved August - 2019\Backup\SL06F.dgn
04-SEP-2019

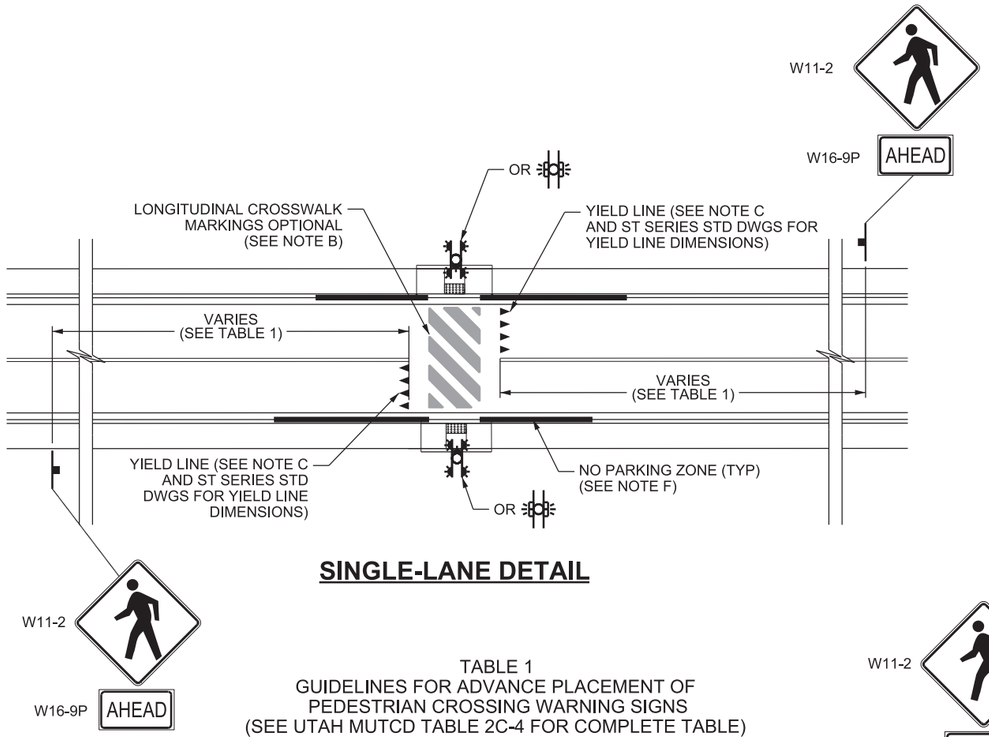


## SINGLE-LANE DETAIL

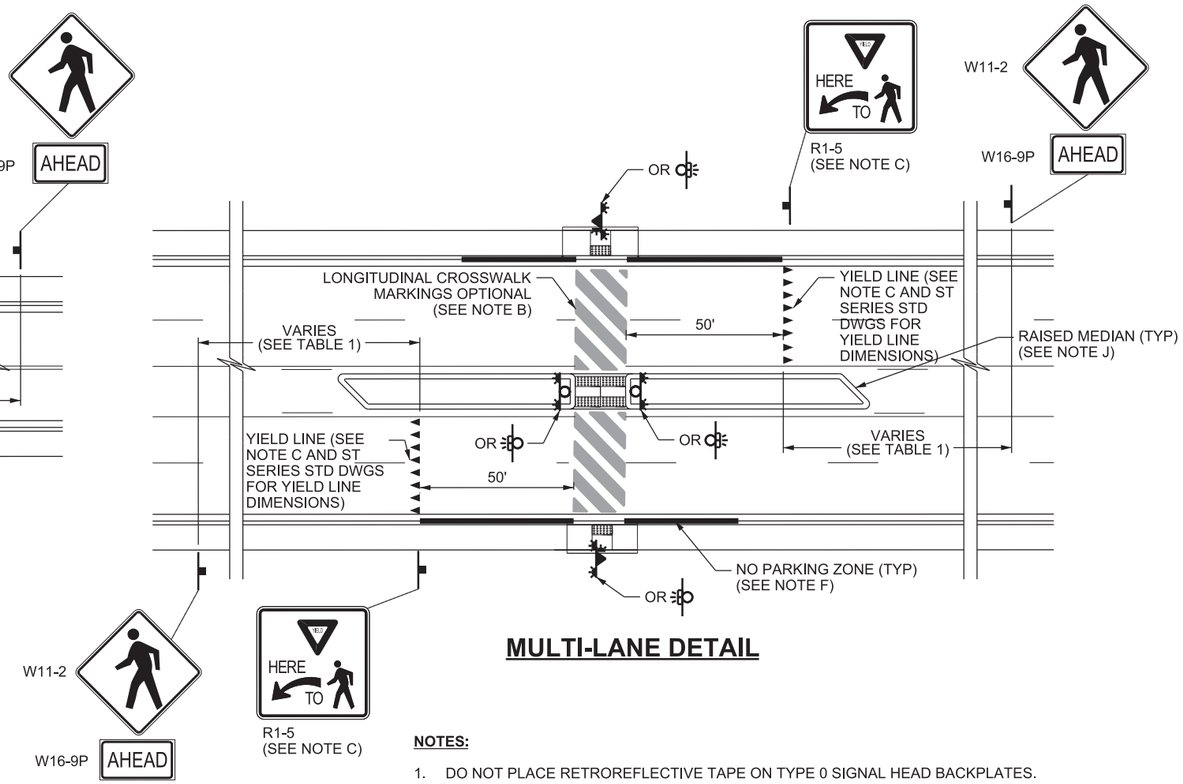


## MULTI-LANE DETAIL

TABLE 1
GUIDELINES FOR ADVANCE PLACEMENT OF PEDESTRIAN CROSSING WARNING SIGNS
(SEE UTAH MUTCD TABLE 2C-4 FOR COMPLETE TABLE)

| POSTED SPEED | ADVANCE PLACEMENT DISTANCE |
|---|---|
| 20-35 MPH | 100 FT |
| 40 MPH (SEE NOTE E) | 125 FT |

**NOTES:**

1. DO NOT PLACE RETROREFLECTIVE TAPE ON TYPE 0 SIGNAL HEAD BACKPLATES.
2. INCREASE MOUNTING HEIGHT OF W11-2 SIGN AND W16-7PL PLAQUE IF BLOCKED BY OTHER SIGNS OR OBSTRUCTIONS. USE A 10-FT TO BOTTOM OF SIGN MOUNTING HEIGHT FOR OPTION B ON OUTSIDE SHOULDER IN MULTI-LANE SITUATIONS TO PREVENT VISUAL BLOCKING FROM R1-5 SIGN.

**DESIGN-ONLY NOTES:**

A. INSTALL STREET LIGHTING UNLESS DIRECTED OTHERWISE BY REGION TRAFFIC OPERATIONS ENGINEER.

B. USE LONGITUDINAL CROSSWALK MARKINGS WHEN REQUIRED BY REGION TRAFFIC OPERATIONS ENGINEER.

C. PLACE YIELD LINE 4 FT FROM CROSSWALK ON SINGLE-LANE APPROACHES OR 50 FT FOR MULTI-LANE APPROACHES. USE "YIELD HERE TO PEDESTRIANS" R1-5 SIGN FOR MULTI-LANE APPROACHES.

D. REFER TO UTAH MUTCD PART 7 FOR REQUIREMENTS AT SCHOOL CROSSINGS.

E. DO NOT USE POST-MOUNTED FLASHING BEACON CROSSWALK WHEN POSTED SPEED EXCEEDS 35 MPH UNLESS OTHERWISE DIRECTED BY REGION TRAFFIC OPERATIONS ENGINEER.

F. PLACE "NO PARKING" SIGNS TO PROHIBIT PARKING 50 FT BEFORE CROSSWALK AND 20 FT AFTER CROSSWALK FOR EACH APPROACH. NO ACCESSES ARE ALLOWED IN THIS AREA.

G. A MULTI-LANE APPROACH HAS TWO OR MORE LANES MOVING TOWARD THE INTERSECTION, INCLUDING TURNING LANES.

H. DO NOT INSTALL FLASHING BEACON CROSSWALK WITHIN A REDUCED SPEED SCHOOL ZONE.

I. DO NOT INSTALL POST-MOUNTED FLASHING BEACONS WHERE THERE ARE FOUR OR MORE LANES, INCLUDING TURNING LANES, IN ONE DIRECTION.

J. RAISED MEDIAN DIMENSIONS DETERMINED BY LOCATION NEEDS. SEE GW SERIES STD DWGS. MEET LATERAL OFFSET REQUIREMENTS.

K. BACK-TO-BACK CONSISTS OF W11-2 AND W16-7P SIGNS AND FLASHING BEACONS FACING OPPOSITE DIRECTIONS MOUNTED ON THE SAME POLE.

L. MEET FHWA INTERIM APPROVAL (IA-21) REQUIREMENTS FOR RECTANGULAR RAPID FLASHING BEACON.

M. RECTANGULAR RAPID FLASHING BEACONS CAN ONLY BE USED ON NON-CONTROLLED APPROACHES.

N. DO NOT MIX POST-MOUNTED BEACON TYPES AT A CROSSWALK.

**LEGEND**

- YELLOW TYPE 0 SIGNAL HEAD
- DETECTABLE WARNING SURFACE
- GROUND MOUNT SIGN
- OPTION A
- OPTION A: BACK-TO-BACK (SEE NOTE K)
- OPTION B
- OPTION B: BACK-TO-BACK (SEE NOTE K)
- OPTION C

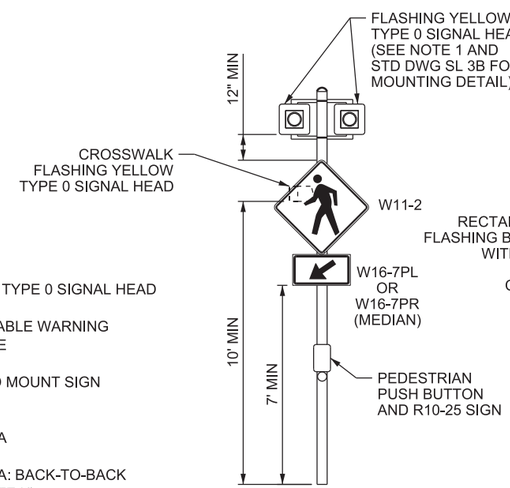


## OPTION A FLASHING BEACON DETAIL

15 FT TRAFFIC SIGNAL POLE / LUMINAIRE POLE (SEE NOTES A, I AND STD DWG SL 1E)

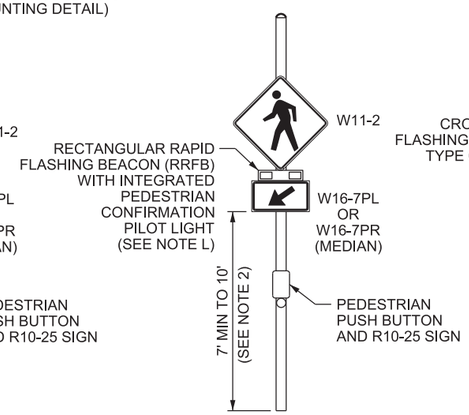


## OPTION B RRFB DETAIL

15 FT TRAFFIC SIGNAL POLE / LUMINAIRE POLE (SEE NOTES A, I, AND STD DWG SL 1E)

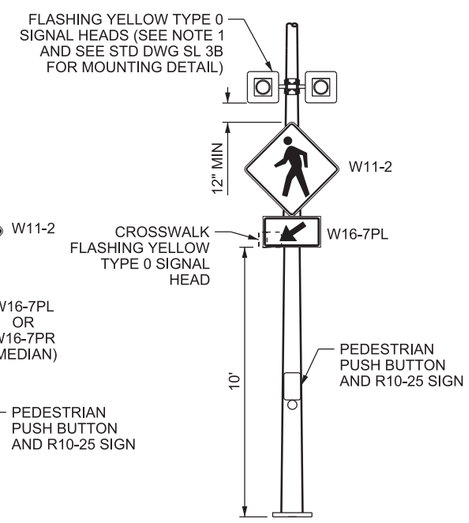


## OPTION C HIGH-MOUNT FLASHING BEACON DETAIL

LUMINAIRE POLE (SEE NOTES A, I AND STD DWG SL 5B)

SUPPLEMENTAL DRAWING

REVISIONS

| NO. | DATE | APPR. | REMARKS |
|---|---|---|---|
| 1 | 2/22/18 | JS | REVISED CALLOUTS, NOTES AND GRAPHICS. DELETED RRFB FROM STD DWGS. DELETED YIELD LINE DISTANCE TABLE. |
| 2 | 8/30/18 | JS | ADDED RRFB OPTION. CHANGED SINGLE LANE DETAIL TO HAVE OPTION A BACK-TO-BACK. |
| 3 | 8/29/19 | MRB | UPDATED REFERENCES FOR THE ST SERIES STANDARD DRAWINGS |

**UTAH DEPARTMENT OF TRANSPORTATION**
STANDARD DRAWINGS FOR ROAD AND BRIDGE CONSTRUCTION
SALT LAKE CITY, UTAH

RECOMMENDED FOR APPROVAL — AUG. 29, 2019 DATE

CHAIRMAN STANDARDS COMMITTEE APPROVED — AUG. 29, 2019 DATE

DEPUTY DIRECTOR

POST-MOUNTED FLASHING BEACON AT A MIDBLOCK CROSSWALK

STANDARD DRAWING TITLE

STD. DWG. NO.
SL 6G

DGN File:L:\Standard_Drawings\Imperial\2017 Approved_Supplemental_Issues\Supp10 Approved August - 2019\Backup1\SL06G.DGN
04-SEP-2019

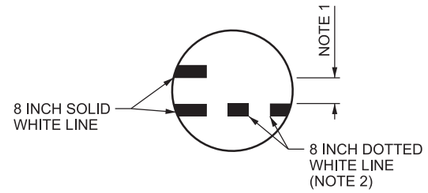


## HOV LANE STRIPING DETAIL FOR TRANSITION FROM PROHIBITED MOVEMENT TO ACCESS OPENING

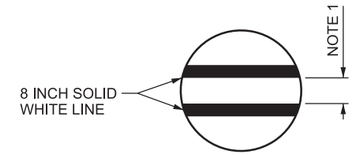


## HOV LANE STRIPING DETAIL FOR PROHIBITED MOVEMENTS

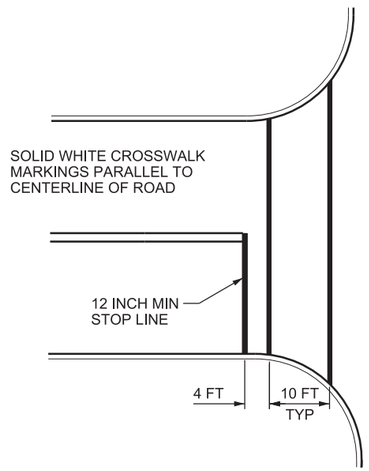


## STOP OR SIGNAL CONTROL

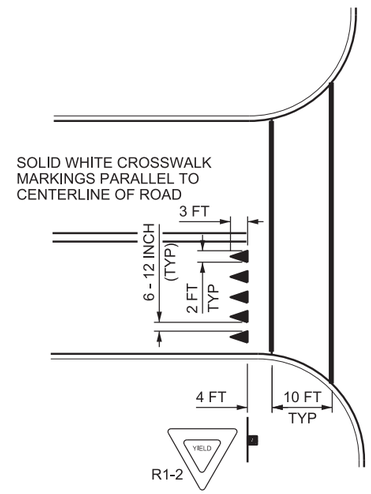


## YIELD CONTROL

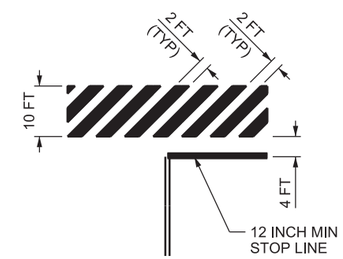


## SPECIAL EMPHASIS CROSSWALK

SOLID WHITE DIAGONAL LINES AT 45°
TO DIRECTION OF TRAVEL

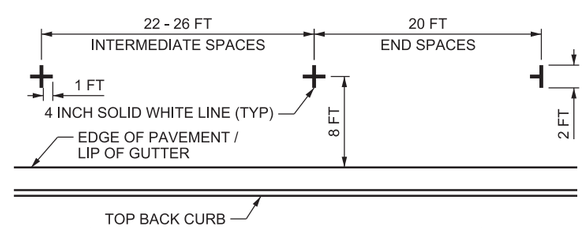


## STANDARD PARALLEL PARKING

| PAVEMENT MARKING LINE DIMENSIONS | | | |
|---|---|---|---|
| TYPE | WIDTH (INCHES) | LENGTH (FT) | GAP (FT) |
| SOLID LINE | 4 | CONTINUOUS | N/A |
| SOLID LINE | 8 | CONTINUOUS | N/A |
| BROKEN LINE | 4 | 10 | 30 |
| LANE DROP | 8 | 3 | 9 |
| DOTTED LINE | 4 | 2 | 6 |
| DOTTED LINE | 8 | 2 | 6 |

**NOTES:**

1. USE 32 INCH (INSIDE TO INSIDE) SEPARATION BETWEEN DOUBLE SOLID WHITE LINES.
2. PLACE 8 INCH DOTTED WHITE LINE AS THE EXTENSION OF THE 8 INCH SOLID WHITE LINE ADJACENT TO THE GENERAL PURPOSE LANE.
3. MAINTAIN 4 INCH SPACE BETWEEN TWO 4 INCH SOLID YELLOW LINES OR BETWEEN 4 INCH SOLID YELLOW LINE AND 4 INCH BROKEN YELLOW LINE.

SUPPLEMENTAL DRAWING

REVISIONS

| NO. | DATE | APPR. | REMARKS |
|---|---|---|---|
| 1 | 8/29/19 | MRB | MOVED ALL DESIGNER INFORMATION TO THE UDOT RDM. DELETED ST 4 TO ST 18 |

**UTAH DEPARTMENT OF TRANSPORTATION**
STANDARD DRAWINGS FOR ROAD AND BRIDGE CONSTRUCTION
SALT LAKE CITY, UTAH

RECOMMENDED FOR APPROVAL — AUG 29, 2019 DATE
CHAIRMAN STANDARDS COMMITTEE APPROVED — AUG 29, 2019 DATE
DEPUTY DIRECTOR

TYPICAL PAVEMENT MARKINGS
STANDARD DRAWING TITLE

STD. DWG. NO.
ST 1

05-SEP-2019 DGN File:L:\Standard Drawings\Imperial\2017 Approved_Supplemental_Issues\Suppl0 Approved August - 2019\Backup1\ST01.dgn

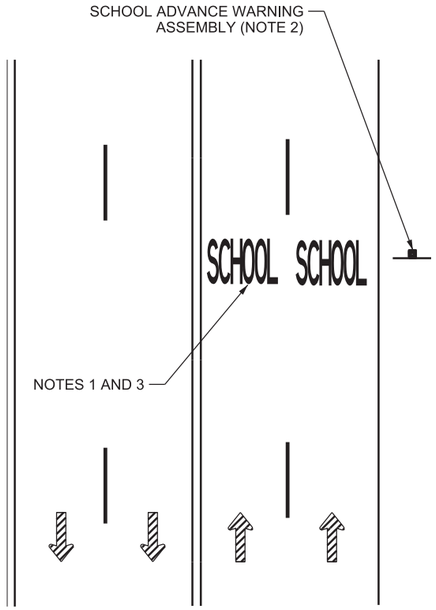


**STANDARD**

ONE MESSAGE PER LANE
ANY NUMBER OF LANES

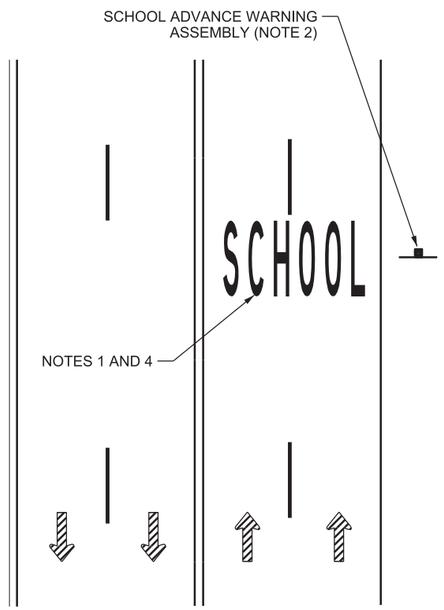


**OPTION**

ONE MESSAGE PER TWO LANES
EVEN NUMBER OF LANES ONLY

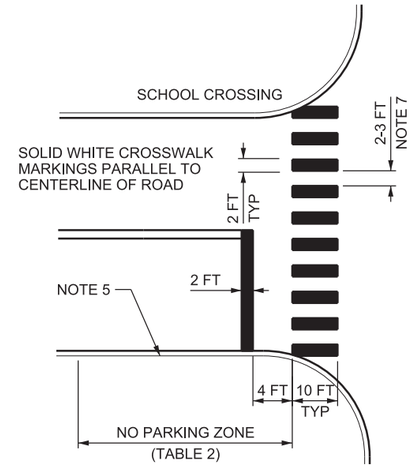


**STOP OR SIGNAL CONTROL**

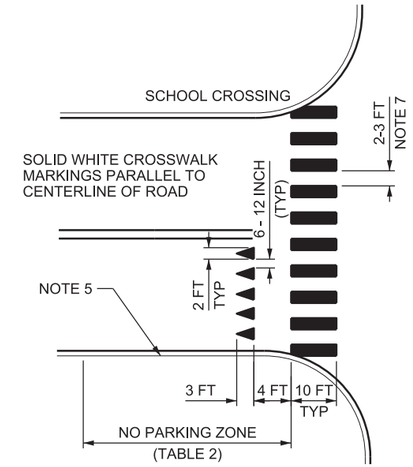


**YIELD CONTROL**

| TABLE 2 | |
|---|---|
| NO PARKING ZONE | |
| SPEED (MPH) (NOTE B) | LENGTH (FT) |
| 25 | 60 |
| 30 | 85 |
| 35 | 115 |
| 40 | 150 |
| 45 | 190 |
| 50 | 230 |

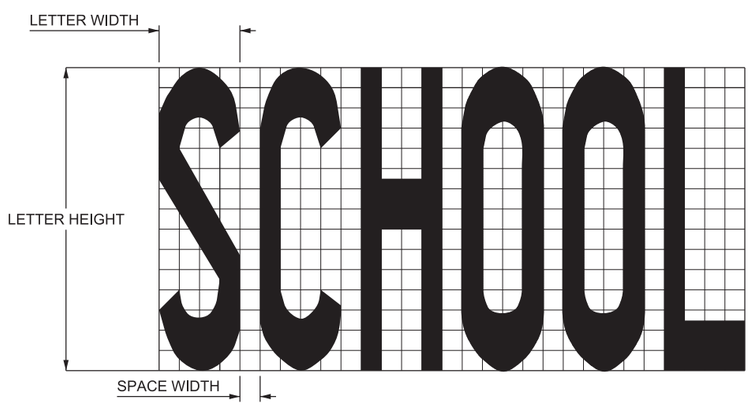


| TABLE 1 | | | |
|---|---|---|---|
| RECOMMENDED LETTER SIZES | | | |
| ONE-LANE MESSAGE | | | |
| LANE WIDTH (FT) | LETTER WIDTH (INCHES) | SPACE WIDTH (INCHES) | MINIMUM LETTER HEIGHT (FT) |
| 12 | 18 | 5 | 6 |
| 11.5 | 17.5 | 4.5 | 6 |
| 11 | 16.5 | 4.25 | 6 |
| 10.5 | 15.75 | 4 | 6 |
| 10 | 15 | 3.75 | 6 |
| TWO-LANE MESSAGE | | | |
| ALL | 32 | 8 | 10 |

**NOTES:**

1. PLACE ALL SCHOOL MESSAGES, PAVEMENT MARKINGS, AND SIGNING IN CONFORMANCE WITH THE UTAH TRAFFIC CONTROLS FOR SCHOOL ZONES (SECTION 7 OF THE UTAH MANUAL ON UNIFORM TRAFFIC CONTROL DEVICES).
2. PLACE SCHOOL MESSAGE ADJACENT TO SCHOOL ADVANCE WARNING ASSEMBLY.
3. SINGLE LANE MESSAGES (STANDARD):
   - MAXIMUM MESSAGE WIDTH NOT TO EXCEED LANE WIDTH LESS 10 INCHES (FOR EXAMPLE, 12 FT TRAFFIC LANE WIDTH LESS 10 INCHES EQUALS 11 FT 2 INCHES MAXIMUM MESSAGE WIDTH).
   - MESSAGE TO BE COMPLETELY CONTAINED WITHIN TRAFFIC LANE, AND NOT ENCROACH UPON LANE STRIPING OR OTHER PAVEMENT MARKINGS.
4. TWO LANE MESSAGES (OPTIONAL):
   - USE TWO-LANE MESSAGE ONLY WHEN THERE ARE AN EVEN NUMBER OF LANES.
   - USE TWO-LANE MESSAGE UPON APPROVAL OF THE REGION TRAFFIC ENGINEER.
   - ONE-HALF OF MESSAGE TO BE CONTAINED IN EACH TRAFFIC LANE. PAVEMENT MESSAGE TO BE WITHIN GAP OF 4 INCH BROKEN WHITE LINE BETWEEN LANES.
5. RED CURB MARKING IS OPTIONAL FOR "NO PARKING" ZONE.
6. NON-STATE ROUTES MAY USE 9 FT WIDE CROSSWALK MARKINGS.
7. VARY PLACEMENT OF CROSSWALK MARKINGS WITH A SPACING OF 2-3 FT TO AVOID WHEEL PATHS.
8. ESTABLISH A "NO PARKING" ZONE PRIOR TO SCHOOL CROSSING, SEE TABLE 2.

SUPPLEMENTAL DRAWING

REVISIONS

| NO. | DATE | APPR. | REMARKS |
|---|---|---|---|
| 1 | 8/29/19 | MRB | MOVED ALL DESIGNER INFORMATION TO THE UDOT RDM. DELETED ST 4 TO ST 18 |

**UTAH DEPARTMENT OF TRANSPORTATION**
STANDARD DRAWINGS FOR ROAD AND BRIDGE CONSTRUCTION
SALT LAKE CITY, UTAH

RECOMMENDED FOR APPROVAL — AUG 29, 2019 DATE
CHAIRMAN STANDARDS COMMITTEE APPROVED — AUG 29, 2019 DATE
DEPUTY DIRECTOR

STANDARD DRAWING TITLE
SCHOOL CROSSING AND SCHOOL MESSAGE

STD. DWG. NO.
ST 2

DGN File:L:\Standard.Drawings\Imperial\2017 Approved_Supplemental.Issues\Suppl0 Approved August - 2019\Backup\ST02.dgn
04-SEP-2019

## CONTINUOUS CONTRAST PAVEMENT MARKING

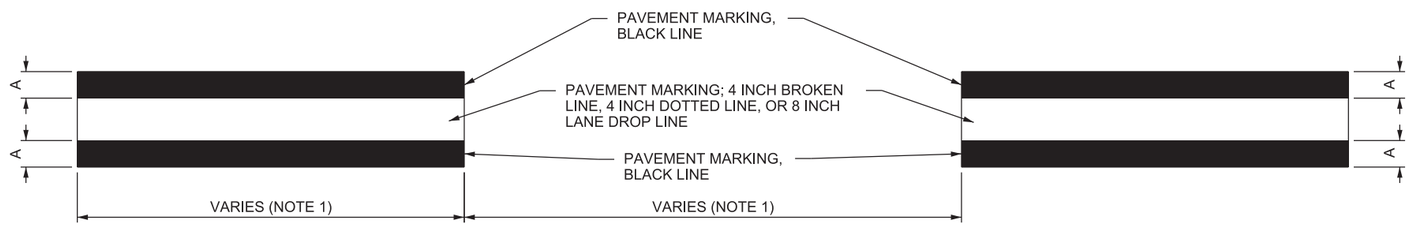


## BACKGROUND CONTRAST PAVEMENT MARKING OPTION 1

| DIMENSION "A" | |
|---|---|
| PAINT | TAPE |
| 2-3 INCHES | 1.5 INCH MIN |

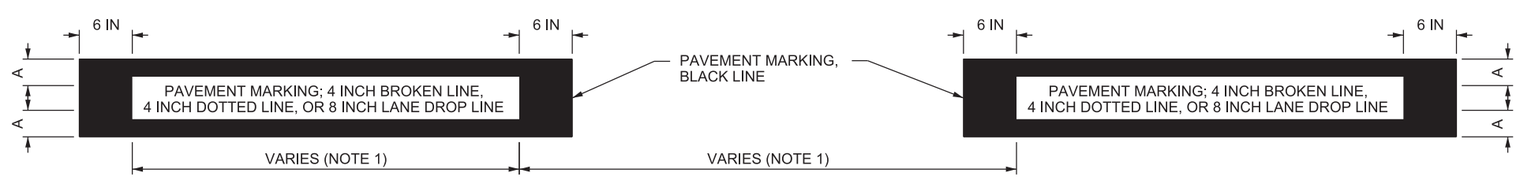


## BACKGROUND CONTRAST PAVEMENT MARKING OPTION 2

**NOTES:**

1. SEE STD DWG ST 1 FOR LINE DIMENSIONS.
2. USE BACKGROUND CONTRAST PAVEMENT MARKING OPTION 1 WHEN BLACK AND WHITE LINES ARE APPLIED SIMULTANEOUSLY.

SUPPLEMENTAL DRAWING

REVISIONS

| NO. | DATE | APPR. | REMARKS |
|---|---|---|---|
| 1 | 8/29/19 | MRB | REVISED NOTES, CHANGED SHEET NUMBER FROM ST 9 TO ST 3 |

**UTAH DEPARTMENT OF TRANSPORTATION**
STANDARD DRAWINGS FOR ROAD AND BRIDGE CONSTRUCTION
SALT LAKE CITY, UTAH

RECOMMENDED FOR APPROVAL — AUG. 29, 2019 DATE
CHAIRMAN STANDARDS COMMITTEE APPROVED — AUG. 29, 2019 DATE
DEPUTY DIRECTOR

CONTRAST PAVEMENT MARKINGS FOR CONCRETE PAVEMENT
STANDARD DRAWING TITLE

STD. DWG. NO.
ST 3

04-SEP-2019 DGN File:L:\Standard_Drawings\Imperial\2017 Approved_Supplemental_Issues\Suppl0 Approved August - 2019\Backupl\ST03.dgn