Minimizing the Impact of Mobile Source Air Toxics (MSAT) in School Buildings

Jerry F. Ludwig, Ph.D., P.E.
Director of Engineering
Environmental Health & Engineering, Inc.
www.eheinc.com 800.825.5343

© 2009 Environmental Health & Engineering, Inc.

Presentation

- Mobile Source Air Toxics (MSAT)
  - Definition and characteristics
- Ventilation system layouts
- Case studies from Las Vegas schools projects
  - Elementary schools (2)
  - High school (1)

Mobile Source Air Toxics

- Consist of both particles and gases
- Particles often discussed as:
  - Diesel particulate matter
  - Black carbon
- Gases of concern include:
  - 1,2-butadiene
  - Formaldehyde
  - Acetaldehyde
  - Acrolien
  - Benzene

MSAT Source Strength

- The MSAT impact diminishes with increased distance from the source
  - Literature shows that MSAT contaminants drop to background level 300m away from roadway
  - LV experience showed under some atmospheric conditions, it would persist as far a 1500m from roadway
- To control both the particulate phase and gas phase MSATs requires two different filters installed in series

General Layout of an Air Handling System

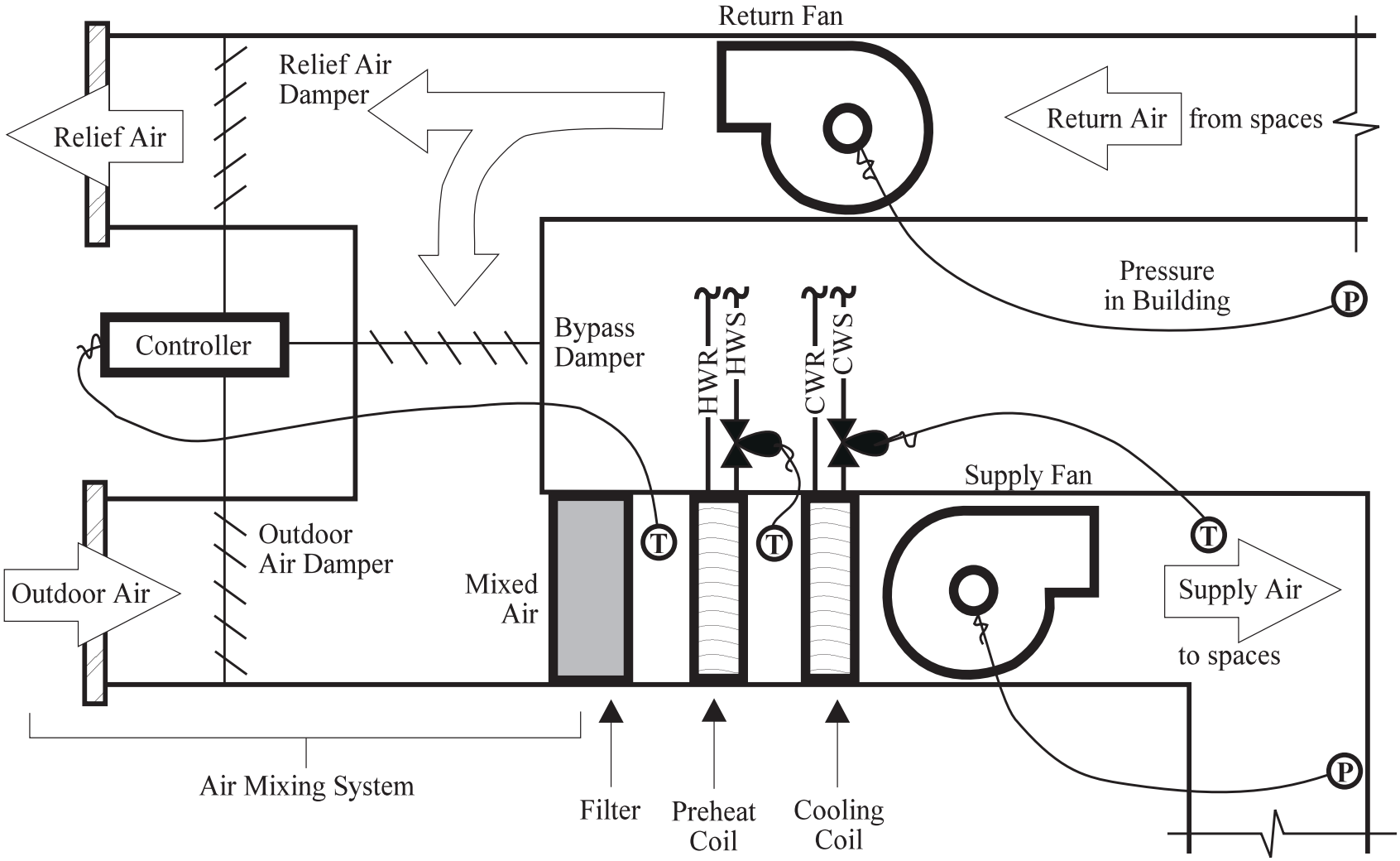

Typical HVAC System in a School Building

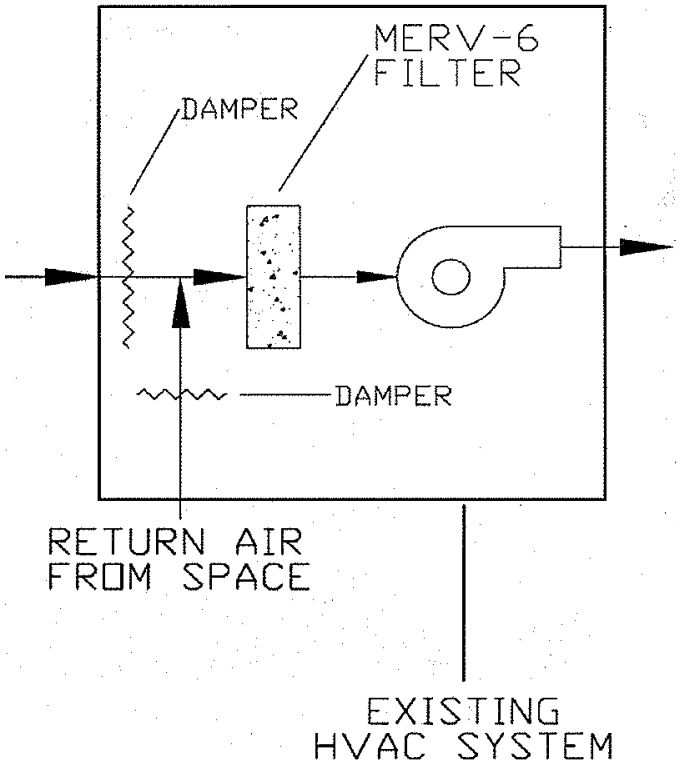

Unit Ventilators and Fan Coil Units

- Unit ventilators are most often observed in K-12 classrooms

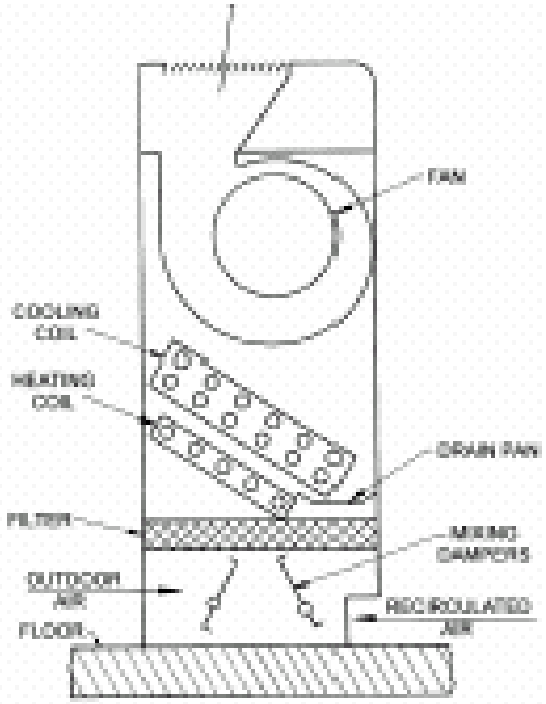

C. AIR-CONDITIONING UNIT VENTILATOR WITH SEPARATE COILS

Adding Filtration to an HVAC System

- Consider affect of added impedance on flow performance
- Need to assure operating within the recommend part of fan performance envelope

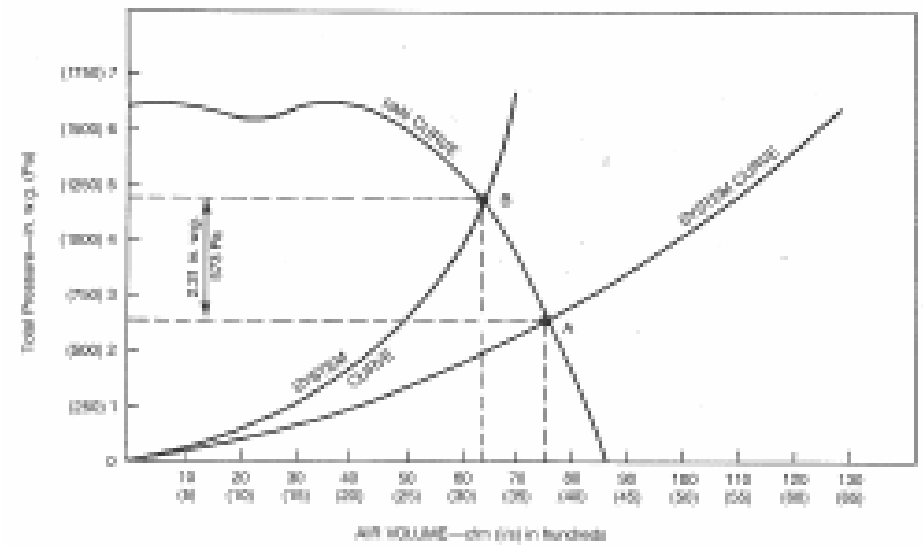

- Need to consider how flow performance will change as filter collects material and "loads up"
- Balance systems to pressurize buildings so that all air entering buildings is filtered

Ideal MSAT Filtration System

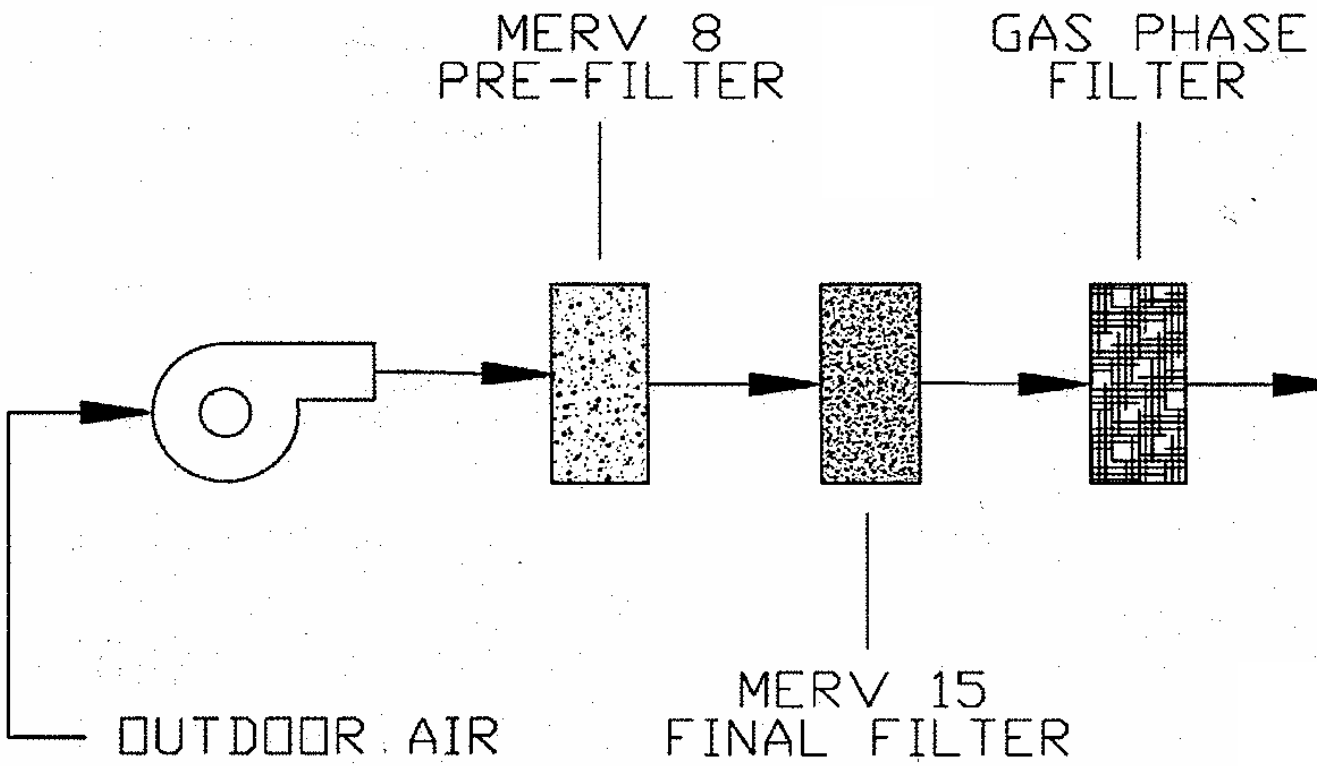

MSAT Filtration System Fitted to Existing School HVAC System

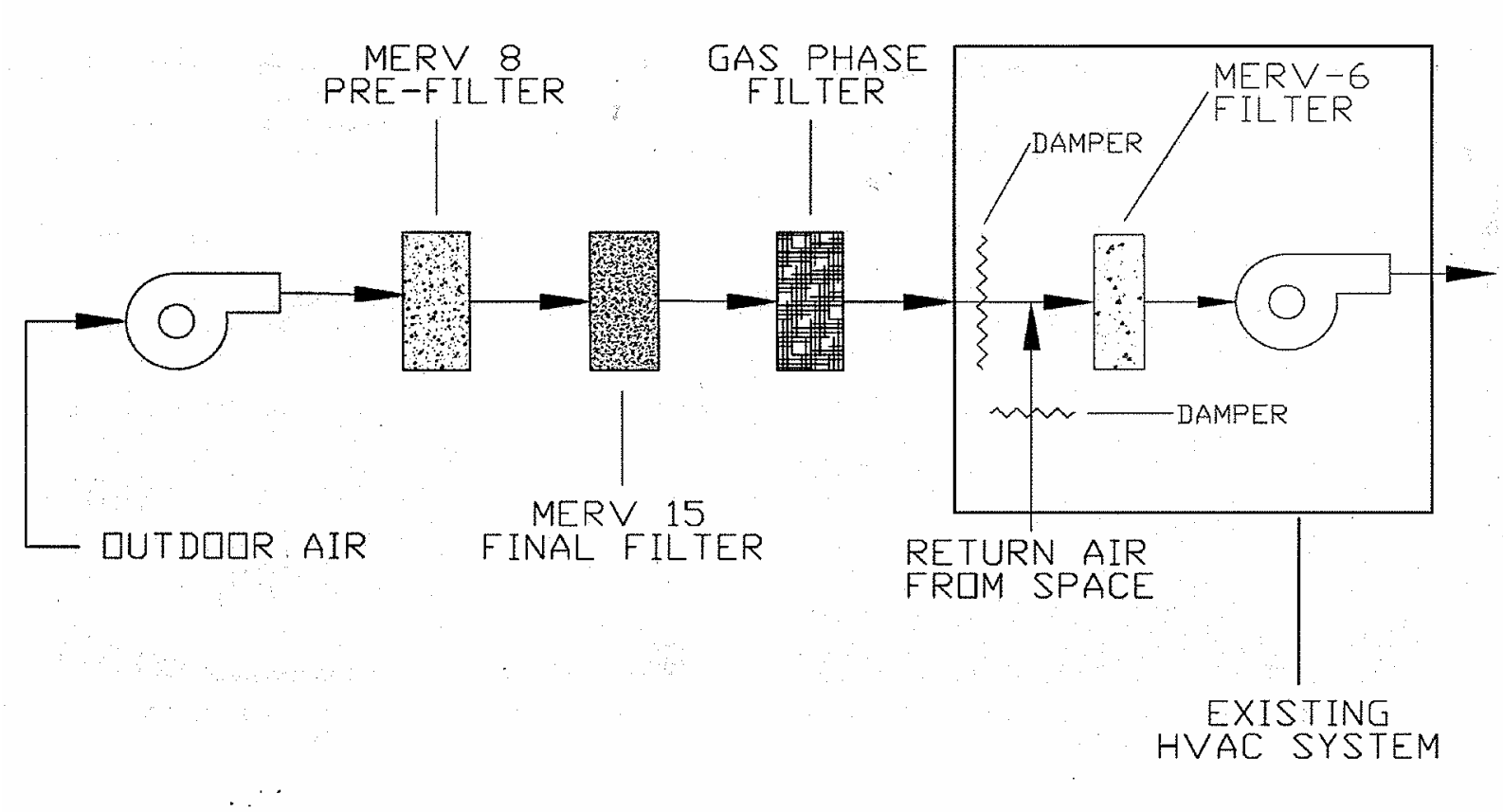

MERV Rating Table

TABLE 12-1 Minimum Efficiency Reporting Value (MERV) Parameters

Standard 52.2 Minimum Efficiency Reporting Value (MERV)	Composite Average Particle Size Efficiency, % in Size Range, µm			Average Arrestance, %, by Standard 52.1 Method	Minimum Final Resistance	
	Range 1 0.30–1.0	Range 2 1.0–3.0	Range 3 3.0–10.0		Pa	in. of water
1	n/a	n/a	$E_3 < 20$	$A_{avg} < 65$	75	0.3
2	n/a	n/a	$E_3 < 20$	$65 \le A_{avg} < 70$	75	0.3
3	n/a	n/a	$E_3 < 20$	$70 \le A_{avg} < 75$	75	0.3
4	n/a	n/a	$E_3 < 20$	$75 \le A_{avg}$	75	0.3
5	n/a	n/a	$20 \le E_3 < 35$	n/a	150	0.6
6	n/a	n/a	$35 \le E_3 < 50$	n/a	150	0.6
7	n/a	n/a	$50 \le E_3 < 70$	n/a	150	0.6
8	n/a	n/a	$70 \le E_3$	n/a	150	0.6
9	n/a	$E_2 < 50$	$85 \le E_3$	n/a	250	1.0
10	n/a	$50 \le E_2 < 65$	$85 \le E_3$	n/a	250	1.0
11	n/a	$65 \le E_2 < 80$	$85 \le E_3$	n/a	250	1.0
12	n/a	$80 \le E_2$	$90 \le E_3$	n/a	250	1.0
13	$E_1 < 75$	$90 \le E_2$	$90 \le E_3$	n/a	350	1.4
14	$75 \le E_1 < 85$	$90 \le E_2$	$90 \le E_3$	n/a	350	1.4
15	$85 \le E_1 < 95$	$90 \le E_2$	$90 \le E_3$	n/a	350	1.4
16	$95 \le E_1$	$95 \le E_2$	$95 \le E_3$	n/a	350	1.4

Note: The minimum final resistance shall be at least twice the initial resistance, or as specified above, whichever is greater. Refer to Section 10.7.1.1.[48]

MSAT Filtration Schools Project in Las Vegas, Nevada

Scope of Work

- Survey filtration products to determine the products best suited to address MSAT contaminants
- Survey Schools to determine the needs and challenges for installation of the filter technology into each school HVAC system
- Interview local engineers to find engineers familiar with the school district's operating and construction bid procedures. Engage that engineer to be part of the team.

Filter System Trade Offs To Be Considered

- First cost of adding filtration
- Cost to replace and maintain filter systems
- Increased Energy Costs associated with filtration
  - Increased fan operating costs
  - Possible loss of airside economizer operation

Implementation Barriers

- Code Triggers
- Electrical Limitations
- Structural Limitations
- Asbestos
- Control system upgrades
- Bidding procedures
- Installation interval between school sessions

MSAT Filtration Schools Project in Las Vegas, Nevada

- Interface with project stakeholders including:
  - Project Sponsor (Sierra Club)
  - Transportation authority
  - School district
  - Federal and regional air quality authorities
  - Local design engineers
  - Installation contractors
- Interface with the scientific community to assess the best filtration strategy for each particular school site. Items to be considered include:
  - Distance from MSAT sources
  - Local climate
  - Available resources

MSAT Filtration Schools Project in Las Vegas, Nevada

- Confirm installation and commission the completed filter installation
- Develop maintenance protocols and schedules

Case Study:
Fyfe Elementary School, NV

- Built circa 1963
- Located within 30 m of roadway
- Nine separate buildings, with no connecting hallways, enclosing 45,000 ft^2
- Retrofit to 19 separate HVAC Systems
- Required Structural Engineering and added Structural Reinforcement of some buildings
- MSAT filter system included MERV 15 particle filters and gas phase filters
  - Required installation of additional fan to compensate for flow impedance caused by added filters
  - Separate filter systems, with a bid price of $453,000

Case Study: Adcock Elementary School, NV

- Built circa 2005
- Single large building, enclosing 80,000 ft^2
- Located within 30 m of roadway
- MSAT filter system included MERV 15 particle filters and gas phase filters
  - MSAT filter system required installation of additional fan to compensate for flow impedance caused by added filters
  - Separate filter systems, with a bid price of $290,000

Case Study: Western High School, NV

- Large campus of buildings ranging in age between early 1960's to buildings just being completed
- Total campus building area of 800,000 ft^2
- Campus on a very dynamic "Master Plan" with newer buildings under construction, and older buildings being demolished
- Located >300 m from roadway
- Upgraded existing MERV 6 filters to MERV 11.
  - Gas phase filters were not required.
  - No additional fans were required to upgrade from MERV 6 to MERV 11 filters

Lessons Learned on Particulate Filtration Principals

- Interception
- Impaction
- Diffusion
- Electrostatic

- Found evidence that some filters relied upon electrostatic attraction to enhance their MERV rating. When the charge was gone the MERV rating was also reduced.

Minimizing the Impact of Mobile Source Air Toxics (MSAT) in School Buildings

Jerry F. Ludwig, Ph.D., P.E.
Director of Engineering
Environmental Health & Engineering, Inc.
www.eheinc.com 800.825.5343